MITSUBISHI ELECTRIC

*Changes for the Better*

AIR TO WATER HEAT PUMP SYSTEMS

Mitsubishi Electric Quality

ecodan

Renewable Heating Technology

# DATA BOOK

Vol.5.8

R32

# Contents


Outdoor unit ..... A-1

Cylinder unit
Hydrobox
Ground Source Heat Pump ..... B-1

Flow temp. controller ..... C-1

Optional parts ..... D-1




**When installing or relocating, or servicing the heat pump, use only the specified refrigerant (R32) to charge the refrigerant lines. Do not mix it with any other refrigerant and do not allow air to remain in the lines.**
**If air is mixed with the refrigerant, then it can be the cause of abnormal high pressure in the refrigerant line, and may result in an explosion and other hazards.**
**The use of any refrigerant other than that specified for the system will cause mechanical failure or system malfunction or unit breakdown. In the worst case, this could lead to a serious impediment to securing product safety.**

# Contents


**1 Specifications .....A-2**

1.1 Outdoor unit specifications..... A-2
1.2 Capacity ..... A-31
1.3 Maximum outlet water temperature ..... A-51
1.4 Available range (Water flow rate, return water temp.).... A-54

**2 Outlines and dimensions .....A-66**

**3 Wiring diagrams.....A-76**

**4 Refrigerant system diagrams .....A-93**

**5 Performance data .....A-100**

5.1 Cooling performance data..... A-100
5.2 Heating performance data ..... A-105
5.3 Part load chart..... A-126
5.4 Best COP ..... A-165
5.5 Correcting capacity for changes
in the length of refrigerant piping ..... A-168

**6 Noise criterion curves .....A-176**

**7 Estimated noise level based
on the distance from Outdoor unit .....A-185**

**8 Earthquake-proof strength analysis .....A-191**

**9 Error code table .....A-214**

**10 Installation location .....A-215**

## 1.1 Outdoor unit specifications

### (1) Packaged-type units

| MODEL NAME | | | PUZ-WM50VHA(-BS) | PUZ-WM60VAA(-BS) |
|---|---|---|---|---|
| POWER SUPPLY(Phase, voltage, frequency) | | | 1φ, 230 V, 50 Hz | 1φ, 230 V, 50 Hz |
| | Max. Current | A | 13.0 | 13.0 |
| Braker size | | A | 16 | 16 |
| Outer casing | | | Galvanized plate | Galvanized plate |
| External finish | | | Munsell N8.75, N2.75 (FRONT PANEL) | Munsell N8.75, N2.75 (FRONT PANEL) |
| Refrigerant control | | | Linear expansion valve | Linear expansion valve |
| Compressor | | | Hermetic twin rotary | Hermetic twin rotary |
| | Model | | SVB130FBBMC-L3 | SVB220FEGMC-L1 |
| | Motor output | kW | 0.9 | 1.5 |
| | Start type | | Inverter | Inverter |
| | Protection devices | | HP switch<br>Discharge thermo<br>Comp. Surface thermo<br>Over current detection | HP switch<br>Discharge thermo<br>Comp. Surface thermo<br>Over current detection |
| | Oil | L | 0.6 | 0.6 |
| Crankcase heater | | | - | - |
| Heat exchanger | Air | | Plate fin coil | Plate fin coil |
| | Water | | Plate heat exchanger | Plate heat exchanger |
| Fan | Fan(drive) x No. | | Propeller fan ×1 | Propeller fan ×1 |
| | Fan motor output | kW | 0.074 | 0.074 |
| | Air flow | $m^3$/min (CFM) | 36 (1270) | 44 (1550) |
| Defrost method | | | Reverse cycle | Reverse cycle |
| Noise level (SPL) | Heating | dBA | 52 | 45 |
| | Cooling | dBA | 52 | 45 |
| Noise level (PWL) | Heating | dBA | 61 | 58 |
| Dimensions | Width | mm(in) | 950 (37-3/8) | 1050 (41-5/16) |
| | Depth | mm(in) | 330+30 (13-1-3/16) | 480 (18-7/8) |
| | Height | mm(in) | 943 (37-1/8) | 1020 (40-3/16) |
| Weight | | kg(lbs) | 71 (157) | 98 (216) |
| Refrigerant | | | R32 | R32 |
| | Chargeless | kg(lbs) | 2.0 (4.4) | 2.2 (4.9) |
| | MAX. | kg(lbs) | - | - |
| Pipe size O.D. | Liquid | mm(in) | - | - |
| | Gas | mm(in) | - | - |
| Connection method | | | Water Connect | Water Connect |
| Between the indoor & outdoor unit | Height difference | m | - | - |
| | Piping length | m | - | - |
| Guaranteed operating range (Outdoor) | Heating | °C | -20 to +24 | -20 to +24 |
| | DHW | °C | -20 to +35 | -20 to +35 |
| | Cooling | °C | +10 to +46 | +10 to +46 |
| Outlet water temp. (Max in Heating, Min in Cooling) | Heating | °C | +60 | +60 |
| | Cooling | °C | +5 | +5 |
| Nominal return water temperature range *1 | Heating | °C | +9 to +59 | +9 to +59 |
| | Cooling | °C | +8 to +28 | +8 to +28 |
| Water Flow rate range | | L/min | 6.5 to 14.3 | 8.6 to 17.2 |

*1 Due to the water quantity of system. See the graph of Section "1.4 Available range".

| MODEL NAME | | | PUZ-WM85VAA(-BS) | PUZ-WM85YAA(-BS) |
|---|---|---|---|---|
| POWER SUPPLY(Phase, voltage, frequency) | | | 1φ, 230 V, 50 Hz | 3φ, 400 V, 50 Hz |
| | Max. Current | A | 22.0 | 11.5 |
| Braker size | | A | 25 | 16 |
| Outer casing | | | Galvanized plate | Galvanized plate |
| External finish | | | Munsell N8.75, N2.75 (FRONT PANEL) | Munsell N8.75, N2.75 (FRONT PANEL) |
| Refrigerant control | | | Linear expansion valve | Linear expansion valve |
| Compressor | | | Hermetic twin rotary | Hermetic twin rotary |
| | Model | | SVB220FEGMC-L1 | SVB220FEAMC-L1 |
| | Motor output | kW | 1.5 | 1.5 |
| | Start type | | Inverter | Inverter |
| | Protection devices | | HP switch<br>Discharge thermo<br>Comp. Surface thermo<br>Over current detection | HP switch<br>Discharge thermo<br>Comp. Surface thermo<br>Over current detection |
| | Oil | L | 0.6 | 0.6 |
| Crankcase heater | | | - | - |
| Heat exchanger | Air | | Plate fin coil | Plate fin coil |
| | Water | | Plate heat exchanger | Plate heat exchanger |
| Fan | Fan(drive) x No. | | Propeller fan ×1 | Propeller fan ×1 |
| | Fan motor output | kW | 0.074 | 0.074 |
| | Air flow | $m^3$/min (CFM) | 44 (1550) | 44 (1550) |
| Defrost method | | | Reverse cycle | Reverse cycle |
| Noise level (SPL) | Heating | dBA | 45 | 45 |
| | Cooling | dBA | 45 | 45 |
| Noise level (PWL) | Heating | dBA | 58 | 58 |
| Dimensions | Width | mm(in) | 1050 (41-5/16) | 1050 (41-5/16) |
| | Depth | mm(in) | 480 (18-7/8) | 480 (18-7/8) |
| | Height | mm(in) | 1020 (40-3/16) | 1020 (40-3/16) |
| Weight | | kg(lbs) | 98 (216) | 111 (245) |
| Refrigerant | | | R32 | R32 |
| | Chargeless | kg(lbs) | 2.2 (4.9) | 2.2 (4.9) |
| | MAX. | kg(lbs) | - | - |
| Pipe size O.D. | Liquid | mm(in) | - | - |
| | Gas | mm(in) | - | - |
| Connection method | | | Water Connect | Water Connect |
| Between the indoor & outdoor unit | Height difference | m | - | - |
| | Piping length | m | - | - |
| Guaranteed operating range (Outdoor) | Heating | °C | -20 to +24 | -20 to +24 |
| | DHW | °C | -20 to +35 | -20 to +35 |
| | Cooling | °C | +10 to +46 | +10 to +46 |
| Outlet water temp. (Max in Heating, Min in Cooling) | Heating | °C | +60 | +60 |
| | Cooling | °C | +5 | +5 |
| Nominal return water temperature range *1 | Heating | °C | +9 to +59 | +9 to +59 |
| | Cooling | °C | +8 to +28 | +8 to +28 |
| Water Flow rate range | | L/min | 10.8 to 24.4 | 10.8 to 24.4 |

*1 Due to the water quantity of system. See the graph of Section "1.4 Available range".

| MODEL NAME | | | PUZ-WM112VAA(-BS) | PUZ-WM112YAA(-BS) |
|---|---|---|---|---|
| POWER SUPPLY(Phase, voltage, frequency) | | | 1φ, 230 V, 50 Hz | 3φ, 400 V, 50 Hz |
| | Max. Current | A | 28.0 | 13.0 |
| Braker size | | A | 32 | 16 |
| Outer casing | | | Galvanized plate | Galvanized plate |
| External finish | | | Munsell N8.75, N2.75 (FRONT PANEL) | Munsell N8.75, N2.75 (FRONT PANEL) |
| Refrigerant control | | | Linear expansion valve | Linear expansion valve |
| Compressor | | | Hermetic scroll | Hermetic scroll |
| | Model | | DVB28FBAMT | DVB28FBBMT |
| | Motor output | kW | 2.2 | 2.2 |
| | Start type | | Inverter | Inverter |
| | Protection devices | | HP switch<br>Discharge thermo<br>Comp. Surface thermo<br>Over current detection | HP switch<br>Discharge thermo<br>Comp. Surface thermo<br>Over current detection |
| | Oil | L | 0.9 | 0.9 |
| Crankcase heater | | | - | - |
| Heat exchanger | Air | | Plate fin coil | Plate fin coil |
| | Water | | Plate heat exchanger | Plate heat exchanger |
| Fan | Fan(drive) x No. | | Propeller fan ×1 | Propeller fan ×1 |
| | Fan motor output | kW | 0.200 | 0.200 |
| | Air flow | $m^3$/min (CFM) | 50 (1760) | 50 (1760) |
| Defrost method | | | Reverse cycle | Reverse cycle |
| Noise level (SPL) | Heating | dBA | 47 | 47 |
| | Cooling | dBA | 49 | 49 |
| Noise level (PWL) | Heating | dBA | 60 | 60 |
| Dimensions | Width | mm(in) | 1050 (41-5/16) | 1050 (41-5/16) |
| | Depth | mm(in) | 480 (18-7/8) | 480 (18-7/8) |
| | Height | mm(in) | 1020 (40-3/16) | 1020 (40-3/16) |
| Weight | | kg(lbs) | 119 (262) | 132 (291) |
| Refrigerant | | | R32 | R32 |
| | Chargeless | kg(lbs) | 3.0 (6.7) | 3.0 (6.7) |
| | MAX. | kg(lbs) | - | - |
| Pipe size O.D. | Liquid | mm(in) | - | - |
| | Gas | mm(in) | - | - |
| Connection method | | | Water Connect | Water Connect |
| Between the indoor & outdoor unit | Height difference | m | - | - |
| | Piping length | m | - | - |
| Guaranteed operating range (Outdoor) | Heating | °C | -25 to +24 | -25 to +24 |
| | DHW | °C | -25 to +35 | -25 to +35 |
| | Cooling | °C | +10 to +46 | +10 to +46 |
| Outlet water temp. (Max in Heating, Min in Cooling) | Heating | °C | +60 | +60 |
| | Cooling | °C | +5 | +5 |
| Nominal return water temperature range *1 | Heating | °C | +9 to +59 | +9 to +59 |
| | Cooling | °C | +8 to +28 | +8 to +28 |
| Water Flow rate range | | L/min | 14.4 to 32.1 | 14.4 to 32.1 |

*1 Due to the water quantity of system. See the graph of Section "1.4 Available range".

| MODEL NAME | | | PUZ-HWM140VHA(-BS) | PUZ-HWM140YHA(-BS) |
|---|---|---|---|---|
| POWER SUPPLY(Phase, voltage, frequency) | | | 1φ, 230V, 50Hz | 3φ, 400V, 50Hz |
| | Max. Current | A | 35.0 | 13.0 |
| Braker size | | A | 40 | 16 |
| Outer casing | | | Galvanized plate | Galvanized plate |
| External finish | | | Munsell: N8.75, 3Y 7.8/1.1 | Munsell: N8.75, 3Y 7.8/1.1 |
| Refrigerant control | | | Linear expansion valve | Linear expansion valve |
| Compressor | | | Hermetic scroll | Hermetic scroll |
| | Model | | AVB36FJDMT | AVB36FJCMT |
| | Motor output | kW | 3.67 | 3.75 |
| | Start type | | Inverter | Inverter |
| | Protection devices | | HP switch<br>Discharge thermo<br>Comp. Surface thermo<br>Over current detection | HP switch<br>Discharge thermo<br>Comp. Surface thermo<br>Over current detection |
| | Oil | L | 1.4 | 1.4 |
| Crankcase heater | | | - | - |
| Heat exchanger | Air | | Plate fin coil | Plate fin coil |
| | Water | | Plate heat exchanger | Plate heat exchanger |
| Fan | Fan(drive) x No. | | Propeller fan ×2 | Propeller fan ×2 |
| | Fan motor output | kW | 0.074 ×2 | 0.074 ×2 |
| | Air flow | $m^3$/min (CFM) | 100 (3530) | 100 (3530) |
| Defrost method | | | Reverse cycle | Reverse cycle |
| Noise level (SPL) | Heating | dBA | 53 | 53 |
| | Cooling | dBA | 53 | 53 |
| Noise level (PWL) | Heating | dBA | 67 | 67 |
| Dimensions | Width | mm(in) | 1020 (40-3/16) | 1020 (40-3/16) |
| | Depth | mm(in) | 330+30 (13-1-3/16) | 330+30 (13-1-3/16) |
| | Height | mm(in) | 1350 (53-1/8) | 1350 (53-1/8) |
| Weight | | kg(lbs) | 132 (291) | 143 (315) |
| Refrigerant | | | R32 | R32 |
| | Chargeless | kg(lbs) | 3.3 (7.3) | 3.3 (7.3) |
| | MAX. | kg(lbs) | - | - |
| Pipe size O.D. | Liquid | mm(in) | - | - |
| | Gas | mm(in) | - | - |
| Connection method | | | Water Connect | Water Connect |
| Between the indoor & outdoor unit | Height difference | m | - | - |
| | Piping length | m | - | - |
| Guaranteed operating range (Outdoor) | Heating | °C | -28 to +21 | -28 to +21 |
| | DHW | °C | -28 to +35 | -28 to +35 |
| | Cooling | °C | +10 to +46 | +10 to +46 |
| Outlet water temp. (Max in Heating, Min in Cooling) | Heating | °C | +60 | +60 |
| | Cooling | °C | +5 | +5 |
| Nominal return water temperature range *1 | Heating | °C | +9 to +59 | +9 to +59 |
| | Cooling | °C | +8 to +28 | +8 to +28 |
| Water Flow rate range | | L/min | 17.9 to 40.1 | 17.9 to 40.1 |

*1 Due to the water quantity of system. See the graph of Section "1.4 Available range".

## (2) Split-type units

| MODEL NAME | | | SUZ-SWM40VA | SUZ-SWM60VA |
|---|---|---|---|---|
| POWER SUPPLY(Phase, voltage, frequency) | | | 1φ, 230 V, 50 Hz | 1φ, 230 V, 50 Hz |
| | Max. Current | A | 13.9 | 13.9 |
| Braker size | | A | 16 | 16 |
| Outer casing | | | Galvanized plate | Galvanized plate |
| External finish | | | Munsell 3Y 7.8/1.1 (FRONT PANEL) | Munsell 3Y 7.8/1.1 (FRONT PANEL) |
| Refrigerant control | | | Linear expansion valve | Linear expansion valve |
| Compressor | | | Hermetic twin rotary | Hermetic twin rotary |
| | Model | | SVB130FBBMT | SVB172FCKMT |
| | Motor output | kW | 0.9 | 1.2 |
| | Start type | | Inverter | Inverter |
| | Protection devices | | Discharge thermo<br>Over current<br>High pressure cut<br>(Indoor unit) | Discharge thermo<br>Over current<br>High pressure cut<br>(Indoor unit) |
| | Oil | L | 0.35 | 0.4 |
| Crankcase heater | | | - | - |
| Heat exchanger | Air | | Plate fin coil | Plate fin coil |
| | Water | | - | - |
| Fan | Fan(drive) x No. | | Propeller fan ×1 | Propeller fan ×1 |
| | Fan motor output | kW | 0.060 | 0.060 |
| | Air flow | $m^3$/min (CFM) | 34.5 (1217) | 34.5 (1217) |
| Defrost method | | | Reverse cycle | Reverse cycle |
| Noise level (SPL) | Heating | dBA | 44 | 45 |
| | Cooling | dBA | 49 | 49 |
| Noise level (PWL) | Heating | dBA | 58 | 60 |
| Dimensions | Width | mm(in) | 840 (33-1/16) | 840 (33-1/16) |
| | Depth | mm(in) | 330 (13) | 330 (13) |
| | Height | mm(in) | 880 (34-5/8) | 880 (34-5/8) |
| Weight | | kg(lbs) | 54 (119) | 54 (119) |
| Refrigerant | | | R32 | R32 |
| | Chargeless | kg(lbs) | 1.2 (2.6) | 1.2 (2.6) |
| | MAX. | kg(lbs) | 1.6 (3.5) | 1.6 (3.5) |
| Pipe size O.D. | Liquid | mm(in) | 6.35 (1/4) | 6.35 (1/4) |
| | Gas | mm(in) | 12.7 (1/2) | 12.7 (1/2) |
| Connection method | | | Flared | Flared |
| Between the indoor & outdoor unit | Height difference | m | Max. 30 | Max. 30 |
| | Piping length | m | 5 to 30 | 5 to 30 |
| Guaranteed operating range (Outdoor) | Heating | °C | -20 to +24 | -20 to +24 |
| | DHW | °C | -20 to +35 | -20 to +35 |
| | Cooling | °C | +10 to +46 | +10 to +46 |
| Outlet water temp. (Max in Heating, Min in Cooling) | Heating | °C | +60 | +60 |
| | Cooling | °C | +5 | +5 |
| Nominal return water temperature range *1 | Heating | °C | +5 to +59 | +5 to +59 |
| | Cooling | °C | +8 to +28 | +8 to +28 |
| Water Flow rate range | | L/min | 6.5 to 11.4 | 7.2 to 17.2 |

*1 Due to the water quantity of system. See the graph of Section "1.4 Available range".

| MODEL NAME | | | | SUZ-SWM80VA | SUZ-SWM30VA |
|---|---|---|---|---|---|
| POWER SUPPLY(Phase, voltage, frequency) | | | | 1φ, 230 V, 50 Hz | 1φ, 230 V, 50 Hz |
| | Max. Current | | A | 13.9 | 13.5 |
| Braker size | | | A | 16 | 16 |
| Outer casing | | | | Galvanized plate | Galvanized plate |
| External finish | | | | Munsell 3Y 7.8/1.1 (FRONT PANEL) | Munsell 3Y 7.8/1.1 (FRONT PANEL) |
| Refrigerant control | | | | Linear expansion valve | Linear expansion valve |
| Compressor | | | | Hermetic twin rotary | Hermetic twin rotary |
| | Model | | | SVB172FCKMT | SVB130FPBM1T |
| | Motor output | | kW | 1.2 | 0.9 |
| | Start type | | | Inverter | Inverter |
| | Protection devices | | | Discharge thermo<br>Over current<br>High pressure cut<br>(Indoor unit) | Discharge thermo<br>Over current<br>Thermal Protector<br>High pressure cut<br>(Indoor unit) |
| | Oil | | L | 0.4 | 0.6 |
| Base heater | | Input | kW | - | - |
| Heat exchanger | | Air | | Plate fin coil | Plate fin coil |
| | | Water | | - | - |
| Fan | Fan(drive) x No. | | | Propeller fan ×1 | Propeller fan ×1 |
| | Fan motor output | | kW | 0.060 | 0.050 |
| | Air flow | | $m^3$/min (CFM) | 36.4 (1285) | 28.0 (989) |
| Defrost method | | | | Reverse cycle | Reverse cycle |
| Noise level (SPL) | | Heating | dBA | 46 | 43 |
| | | Cooling | dBA | 49 | 45 |
| Noise level (PWL) | | Heating | dBA | 62 | 57 |
| Dimensions | | Width | mm(in) | 840 (33-1/16) | 714 (28-1/8) |
| | | Depth | mm(in) | 330 (13) | 285 (11-1/4) |
| | | Height | mm(in) | 880 (34-5/8) | 800 (31-1/2) |
| Weight | | | kg(lbs) | 54 (119) | 39 (86) |
| Refrigerant | | | | R32 | R32 |
| | | Chargeless | kg(lbs) | 1.2 (2.6) | 0.8 (1.8) |
| | | MAX. | kg(lbs) | 1.6 (3.5) | 1.3 (2.9) |
| Pipe size O.D. | | Liquid | mm(in) | 6.35 (1/4) | 6.35 (1/4) |
| | | Gas | mm(in) | 12.7 (1/2) | 12.7 (1/2) |
| Connection method | | | | Flared | Flared |
| Between the indoor & outdoor unit | | Height difference | m | Max. 30 | Max. 26 |
| | | Piping length | m | 5 to 30 | 2 to 26 |
| Guaranteed operating range (Outdoor) | | Heating | °C | -20 to +24 | -25 to +24 |
| | | DHW | °C | -20 to +35 | -25 to +35 |
| | | Cooling | °C | +10 to +46 | +10 to +46 |
| Outlet water temp. (Max in Heating, Min in Cooling) | | Heating | °C | +60 | +60 |
| | | Cooling | °C | +5 | +5 |
| Nominal return water temperature range *1 | | Heating | °C | +5 to +59 | +5 to +59 |
| | | Cooling | °C | +8 to +28 | +8 to +28 |
| Water Flow rate range | | | L/min | 7.8 to 21.5 | 6.5 to 11.4 |

*1 Due to the water quantity of system. See the graph of Section "1.4 Available range".

| MODEL NAME | | | SUZ-SHWM30VAH | SUZ-SWM40VA2(-SC) |
|---|---|---|---|---|
| POWER SUPPLY(Phase, voltage, frequency) | | | 1φ, 230 V, 50 Hz | 1φ, 230 V, 50 Hz |
| | Max. Current | A | 13.5 | 13.5 |
| Braker size | | A | 16 | 16 |
| Outer casing | | | Galvanized plate | Galvanized plate |
| External finish | | | Munsell 3Y 7.8/1.1 (FRONT PANEL) | Munsell 3Y 7.8/1.1 (FRONT PANEL) |
| Refrigerant control | | | Linear expansion valve | Linear expansion valve |
| Compressor | | | Hermetic twin rotary | Hermetic twin rotary |
| | Model | | SVB130FPBM1T | SVB130FPBM1T |
| | Motor output | kW | 0.9 | 0.9 |
| | Start type | | Inverter | Inverter |
| | Protection devices | | Discharge thermo<br>Over current<br>Thermal Protector<br>High pressure cut<br>(Indoor unit) | Discharge thermo<br>Over current<br>Thermal Protector<br>High pressure cut<br>(Indoor unit) |
| | Oil | L | 0.6 | 0.6 |
| Base heater | Input | kW | 0.060 | - |
| Heat exchanger | Air | | Plate fin coil | Plate fin coil |
| | Water | | - | - |
| Fan | Fan(drive) x No. | | Propeller fan ×1 | Propeller fan ×1 |
| | Fan motor output | kW | 0.050 | 0.050 |
| | Air flow | $m^3$/min (CFM) | 28.0 (989) | 28.0 (989) |
| Defrost method | | | Reverse cycle | Reverse cycle |
| Noise level (SPL) | Heating | dBA | 43 | 43 |
| | Cooling | dBA | 45 | 46 |
| Noise level (PWL) | Heating | dBA | 57 | 57 |
| Dimensions | Width | mm(in) | 714 (28-1/8) | 714 (28-1/8) |
| | Depth | mm(in) | 285 (11-1/4) | 285 (11-1/4) |
| | Height | mm(in) | 800 (31-1/2) | 800 (31-1/2) |
| Weight | | kg(lbs) | 39.5 (87) | 39 (86) |
| Refrigerant | | | R32 | R32 |
| | Chargeless | kg(lbs) | 0.8 (1.8) | 0.8 (1.8) |
| | MAX. | kg(lbs) | 1.3 (2.9) | 1.3 (2.9) |
| Pipe size O.D. | Liquid | mm(in) | 6.35 (1/4) | 6.35 (1/4) |
| | Gas | mm(in) | 12.7 (1/2) | 12.7 (1/2) |
| Connection method | | | Flared | Flared |
| Between the indoor & outdoor unit | Height difference | m | Max. 26 | Max. 26 |
| | Piping length | m | 2 to 26 | 2 to 26 |
| Guaranteed operating range (Outdoor) | Heating | °C | -25 to +24 | -25 to +24 |
| | DHW | °C | -25 to +35 | -25 to +35 |
| | Cooling | °C | +10 to +46 | +10 to +46 |
| Outlet water temp. (Max in Heating, Min in Cooling) | Heating | °C | +60 | +60 |
| | Cooling | °C | +5 | +5 |
| Nominal return water temperature range *1 | Heating | °C | +5 to +59 | +5 to +59 |
| | Cooling | °C | +8 to +28 | +8 to +28 |
| Water Flow rate range | | L/min | 6.5 to 11.4 | 6.5 to 11.4 |

*1 Due to the water quantity of system. See the graph of Section "1.4 Available range".

| MODEL NAME | | | | SUZ-SHWM40VAH(-SC) | SUZ-SWM60VA2(-SC) |
|---|---|---|---|---|---|
| POWER SUPPLY(Phase, voltage, frequency) | | | | 1φ, 230 V, 50 Hz | 1φ, 230 V, 50 Hz |
| | Max. Current | | A | 13.5 | 13.5 |
| Braker size | | | A | 16 | 16 |
| Outer casing | | | | Galvanized plate | Galvanized plate |
| External finish | | | | Munsell 3Y 7.8/1.1 (FRONT PANEL) | Munsell 3Y 7.8/1.1 (FRONT PANEL) |
| Refrigerant control | | | | Linear expansion valve | Linear expansion valve |
| Compressor | | | | Hermetic twin rotary | Hermetic twin rotary |
| | Model | | | SVB172FPKM1T | SVB172FPKM1T |
| | Motor output | | kW | 1.2 | 1.2 |
| | Start type | | | Inverter | Inverter |
| | Protection devices | | | Discharge thermo<br>Over current<br>Thermal Protector<br>High pressure cut<br>(Indoor unit) | Discharge thermo<br>Over current<br>Thermal Protector<br>High pressure cut<br>(Indoor unit) |
| | Oil | | L | 0.6 | 0.6 |
| Base heater | | Input | kW | 0.060 | - |
| Heat exchanger | | Air | | Plate fin coil | Plate fin coil |
| | | Water | | - | - |
| Fan | Fan(drive) x No. | | | Propeller fan ×1 | Propeller fan ×1 |
| | Fan motor output | | kW | 0.050 | 0.050 |
| | Air flow | | $m^3$/min (CFM) | 30.2 (1065) | 30.2 (1065) |
| Defrost method | | | | Reverse cycle | Reverse cycle |
| Noise level (SPL) | | Heating | dBA | 44 | 45 |
| | | Cooling | dBA | 47 | 47 |
| Noise level (PWL) | | Heating | dBA | 58 | 60 |
| Dimensions | | Width | mm(in) | 714 (28-1/8) | 714 (28-1/8) |
| | | Depth | mm(in) | 285 (11-1/4) | 285 (11-1/4) |
| | | Height | mm(in) | 800 (31-1/2) | 800 (31-1/2) |
| Weight | | | kg(lbs) | 40 (88) | 40 (88) |
| Refrigerant | | | | R32 | R32 |
| | | Chargeless | kg(lbs) | 0.8 (1.8) | 0.8 (1.8) |
| | | MAX. | kg(lbs) | 1.3 (2.9) | 1.3 (2.9) |
| Pipe size O.D. | | Liquid | mm(in) | 6.35 (1/4) | 6.35 (1/4) |
| | | Gas | mm(in) | 12.7 (1/2) | 12.7 (1/2) |
| Connection method | | | | Flared | Flared |
| Between the indoor & outdoor unit | | Height difference | m | Max. 26 | Max. 26 |
| | | Piping length | m | 2 to 26 | 2 to 26 |
| Guaranteed operating range (Outdoor) | | Heating | °C | -25 to +24 | -25 to +24 |
| | | DHW | °C | -25 to +35 | -25 to +35 |
| | | Cooling | °C | +10 to +46 | +10 to +46 |
| Outlet water temp. (Max in Heating, Min in Cooling) | | Heating | °C | +60 | +60 |
| | | Cooling | °C | +5 | +5 |
| Nominal return water temperature range *1 | | Heating | °C | +5 to +59 | +5 to +59 |
| | | Cooling | °C | +8 to +28 | +8 to +28 |
| Water Flow rate range | | | L/min | 7.2 to 17.2 | 7.2 to 17.2 |

*1 Due to the water quantity of system. See the graph of Section "1.4 Available range".

| MODEL NAME | | | SUZ-SHWM60VAH(-SC) | SUZ-SWM80VA2 |
|---|---|---|---|---|
| POWER SUPPLY(Phase, voltage, frequency) | | | 1φ, 230 V, 50 Hz | 1φ, 230 V, 50 Hz |
| | Max. Current | A | 17.3 | 17.3 |
| Braker size | | A | 20 | 20 |
| Outer casing | | | Galvanized plate | Galvanized plate |
| External finish | | | Munsell 3Y 7.8/1.1 (FRONT PANEL) | Munsell 3Y 7.8/1.1 (FRONT PANEL) |
| Refrigerant control | | | Linear expansion valve | Linear expansion valve |
| Compressor | | | Hermetic twin rotary | Hermetic twin rotary |
| | Model | | SVB220FUAM2T | SVB220FUAM2T |
| | Motor output | kW | 1.5 | 1.5 |
| | Start type | | Inverter | Inverter |
| | Protection devices | | Discharge thermo<br>Over current<br>Thermal Protector<br>High pressure cut<br>(Indoor unit) | Discharge thermo<br>Over current<br>Thermal Protector<br>High pressure cut<br>(Indoor unit) |
| | Oil | L | 0.6 | 0.6 |
| Base heater | Input | kW | 0.120 | - |
| Heat exchanger | Air | | Plate fin coil | Plate fin coil |
| | Water | | - | - |
| Fan | Fan(drive) x No. | | Propeller fan ×1 | Propeller fan ×1 |
| | Fan motor output | kW | 0.050 | 0.050 |
| | Air flow | $m^3$/min (CFM) | 41.7 (1471) | 46.5 (1642) |
| Defrost method | | | Reverse cycle | Reverse cycle |
| Noise level (SPL) | Heating | dBA | 45 | 46 |
| | Cooling | dBA | 47 | 47 |
| Noise level (PWL) | Heating | dBA | 60 | 60 |
| Dimensions | Width | mm(in) | 840 (33-1/16) | 840 (33-1/16) |
| | Depth | mm(in) | 330 (13) | 330 (13) |
| | Height | mm(in) | 880 (34-5/8) | 880 (34-5/8) |
| Weight | | kg(lbs) | 53.5 (118) | 53 (117) |
| Refrigerant | | | R32 | R32 |
| | Chargeless | kg(lbs) | 1.1 (2.4) | 1.1 (2.4) |
| | MAX. | kg(lbs) | 1.7 (3.7) | 1.7 (3.7) |
| Pipe size O.D. | Liquid | mm(in) | 6.35 (1/4) | 6.35 (1/4) |
| | Gas | mm(in) | 12.7 (1/2) | 12.7 (1/2) |
| Connection method | | | Flared | Flared |
| Between the indoor & outdoor unit | Height difference | m | Max. 30 | Max. 30 |
| | Piping length | m | 2 to 46 | 2 to 46 |
| Guaranteed operating range (Outdoor) | Heating | °C | -25 to +24 | -25 to +24 |
| | DHW | °C | -25 to +35 | -25 to +35 |
| | Cooling | °C | +10 to +46 | +10 to +46 |
| Outlet water temp. (Max in Heating, Min in Cooling) | Heating | °C | +60 | +60 |
| | Cooling | °C | +5 | +5 |
| Nominal return water temperature range *1 | Heating | °C | +5 to +59 | +5 to +59 |
| | Cooling | °C | +8 to +28 | +8 to +28 |
| Water Flow rate range | | L/min | 10.9 to 21.5 | 10.9 to 21.5 |

*1 Due to the water quantity of system. See the graph of Section "1.4 Available range".

| MODEL NAME | | | | SUZ-SWM80VAH2 | SUZ-SWM100VA |
|---|---|---|---|---|---|
| POWER SUPPLY(Phase, voltage, frequency) | | | | 1φ, 230 V, 50 Hz | 1φ, 230 V, 50 Hz |
| | Max. Current | | A | 17.3 | 17.3 |
| Braker size | | | A | 20 | 20 |
| Outer casing | | | | Galvanized plate | Galvanized plate |
| External finish | | | | Munsell 3Y 7.8/1.1 (FRONT PANEL) | Munsell 3Y 7.8/1.1 (FRONT PANEL) |
| Refrigerant control | | | | Linear expansion valve | Linear expansion valve |
| Compressor | | | | Hermetic twin rotary | Hermetic twin rotary |
| | Model | | | SVB220FUAM2T | SVB220FUAM2T |
| | Motor output | | kW | 1.5 | 1.5 |
| | Start type | | | Inverter | Inverter |
| | Protection devices | | | Discharge thermo<br>Over current<br>Thermal Protector<br>High pressure cut<br>(Indoor unit) | Discharge thermo<br>Over current<br>Thermal Protector<br>High pressure cut<br>(Indoor unit) |
| | Oil | | L | 0.6 | 0.6 |
| Base heater | | Input | kW | 0.120 | - |
| Heat exchanger | | Air | | Plate fin coil | Plate fin coil |
| | | Water | | - | - |
| Fan | Fan(drive) x No. | | | Propeller fan ×1 | Propeller fan ×1 |
| | Fan motor output | | kW | 0.050 | 0.050 |
| | Air flow | | $m^3$/min (CFM) | 46.5 (1642) | 46.5 (1642) |
| Defrost method | | | | Reverse cycle | Reverse cycle |
| Noise level (SPL) | | Heating | dBA | 46 | 47 |
| | | Cooling | dBA | 47 | 47 |
| Noise level (PWL) | | Heating | dBA | 60 | 62 |
| Dimensions | | Width | mm(in) | 840 (33-1/16) | 840 (33-1/16) |
| | | Depth | mm(in) | 330 (13) | 330 (13) |
| | | Height | mm(in) | 880 (34-5/8) | 880 (34-5/8) |
| Weight | | | kg(lbs) | 53.5 (118) | 53 (117) |
| Refrigerant | | | | R32 | R32 |
| | | Chargeless | kg(lbs) | 1.1 (2.4) | 1.1 (2.4) |
| | | MAX. | kg(lbs) | 1.7 (3.7) | 1.7 (3.7) |
| Pipe size O.D. | | Liquid | mm(in) | 6.35 (1/4) | 6.35 (1/4) |
| | | Gas | mm(in) | 12.7 (1/2) | 12.7 (1/2) |
| Connection method | | | | Flared | Flared |
| Between the indoor & outdoor unit | | Height difference | m | Max. 30 | Max. 30 |
| | | Piping length | m | 2 to 46 | 2 to 46 |
| Guaranteed operating range (Outdoor) | | Heating | °C | -25 to +24 | -25 to +24 |
| | | DHW | °C | -25 to +35 | -25 to +35 |
| | | Cooling | °C | +10 to +46 | +10 to +46 |
| Outlet water temp. (Max in Heating, Min in Cooling) | | Heating | °C | +60 | +60 |
| | | Cooling | °C | +5 | +5 |
| Nominal return water temperature range *1 | | Heating | °C | +5 to +59 | +5 to +59 |
| | | Cooling | °C | +8 to +28 | +8 to +28 |
| Water Flow rate range | | | L/min | 10.9 to 21.5 | 10.9 to 21.5 |

*1 Due to the water quantity of system. See the graph of Section "1.4 Available range".

| MODEL NAME | | | | SUZ-SWM100VAH | PUZ-SWM60VAA |
|---|---|---|---|---|---|
| POWER SUPPLY(Phase, voltage, frequency) | | | | 1φ, 230 V, 50 Hz | 1φ, 230 V, 50 Hz |
| | Max. Current | | A | 17.3 | 13.5 |
| Braker size | | | A | 20 | 16 |
| Outer casing | | | | Galvanized plate | Galvanized plate |
| External finish | | | | Munsell 3Y 7.8/1.1 (FRONT PANEL) | Munsell N8.75, N2.75 (FRONT PANEL) |
| Refrigerant control | | | | Linear expansion valve | Linear expansion valve |
| Compressor | | | | Hermetic twin rotary | Hermetic scroll |
| | Model | | | SVB220FUAM2T | DVB28FECMT |
| | Motor output | | kW | 1.5 | 2.2 |
| | Start type | | | Inverter | Inverter |
| | Protection devices | | | Discharge thermo<br>Over current<br>Thermal Protector<br>High pressure cut<br>(Indoor unit) | HP switch<br>Discharge thermo<br>Comp. Surface thermo<br>Over current detection<br>Thermal Protector |
| | Oil | | L | 0.6 | 0.9 |
| Base heater | | Input | kW | 0.120 | - |
| Heat exchanger | | Air | | Plate fin coil | Plate fin coil |
| | | Water | | - | - |
| Fan | Fan(drive) x No. | | | Propeller fan ×1 | Propeller fan ×1 |
| | Fan motor output | | kW | 0.050 | 0.200 |
| | Air flow | | $m^3$/min (CFM) | 46.5 (1642) | 58 (2050) |
| Defrost method | | | | Reverse cycle | Reverse cycle |
| Noise level (SPL) | | Heating | dBA | 47 | 40 |
| | | Cooling | dBA | 47 | 45 |
| Noise level (PWL) | | Heating | dBA | 62 | 54 |
| Dimensions | | Width | mm(in) | 840 (33-1/16) | 1050 (41-3/8) |
| | | Depth | mm(in) | 330 (13) | 480 (18-7/8) |
| | | Height | mm(in) | 880 (34-5/8) | 1040 (40) |
| Weight | | | kg(lbs) | 53.5 (118) | 104.5 (231) |
| Refrigerant | | | | R32 | R32 |
| | | Chargeless | kg(lbs) | 1.1 (2.4) | 1.8 (3.97) |
| | | MAX. | kg(lbs) | 1.7 (3.7) | 2.4 (5.29) |
| Pipe size O.D. | | Liquid | mm(in) | 6.35 (1/4) | 6.35 (1/4) |
| | | Gas | mm(in) | 12.7 (1/2) | 12.7 (1/2) or 15.88 (5/8) *2 |
| Connection method | | | | Flared | Flared |
| Between the indoor & outdoor unit | | Height difference | m | Max. 30 | Max. 30 |
| | | Piping length | m | 2 to 46 | 2 to 50 |
| Guaranteed operating range (Outdoor) | | Heating | °C | -25 to +24 | -25 to +24 |
| | | DHW | °C | -25 to +35 | -25 to +42 |
| | | Cooling | °C | +10 to +46 | +10 to +52 |
| Outlet water temp. (Max in Heating, Min in Cooling) | | Heating | °C | +60 | +60 |
| | | Cooling | °C | +5 | +5 |
| Nominal return water temperature range *1 | | Heating | °C | +5 to +59 | +5 to +59 |
| | | Cooling | °C | +8 to +28 | +8 to +28 |
| Water Flow rate range | | | L/min | 10.9 to 21.5 | 7.2 to 22.9 |

*1 Due to the water quantity of system. See the graph of Section "1.4 Available range".
*2 The capacity depends on the length and diameter of refrigerant piping. Check the length and diameter to operate the air conditioner in an adequate capacity.

| MODEL NAME | | | | PUZ-SWM80VAA | PUZ-SWM80YAA |
|---|---|---|---|---|---|
| POWER SUPPLY(Phase, voltage, frequency) | | | | 1φ, 230 V, 50 Hz | 3φ, 400 V, 50 Hz |
| | Max. Current | | A | 17.0 | 8.0 |
| Braker size | | | A | 20 | 16 |
| Outer casing | | | | Galvanized plate | Galvanized plate |
| External finish | | | | Munsell N8.75, N2.75 (FRONT PANEL) | Munsell N8.75, N2.75 (FRONT PANEL) |
| Refrigerant control | | | | Linear expansion valve | Linear expansion valve |
| Compressor | | | | Hermetic scroll | Hermetic scroll |
| | Model | | | DVB28FECMT | DVB28FEDMT |
| | Motor output | | kW | 2.2 | 2.2 |
| | Start type | | | Inverter | Inverter |
| | Protection devices | | | HP switch<br>Discharge thermo<br>Comp. Surface thermo<br>Over current detection<br>Thermal Protector | HP switch<br>Discharge thermo<br>Comp. Surface thermo<br>Over current detection<br>Thermal Protector |
| | Oil | | L | 0.9 | 0.9 |
| Base heater | | Input | kW | - | - |
| Heat exchanger | | Air | | Plate fin coil | Plate fin coil |
| | | Water | | - | - |
| Fan | Fan(drive) x No. | | | Propeller fan ×1 | Propeller fan ×1 |
| | Fan motor output | | kW | 0.200 | 0.200 |
| | Air flow | | $m^3$/min (CFM) | 58 (2050) | 58 (2050) |
| Defrost method | | | | Reverse cycle | Reverse cycle |
| Noise level (SPL) | | Heating | dBA | 41 | 41 |
| | | Cooling | dBA | 46 | 46 |
| Noise level (PWL) | | Heating | dBA | 54 | 54 |
| Dimensions | | Width | mm(in) | 1050 (41-3/8) | 1050 (41-3/8) |
| | | Depth | mm(in) | 480 (18-7/8) | 480 (18-7/8) |
| | | Height | mm(in) | 1040 (40) | 1040 (40) |
| Weight | | | kg(lbs) | 104.5 (231) | 113.5 (251) |
| Refrigerant | | | | R32 | R32 |
| | | Chargeless | kg(lbs) | 1.8 (3.97) | 1.8 (3.97) |
| | | MAX. | kg(lbs) | 2.4 (5.29) | 2.4 (5.29) |
| Pipe size O.D. | | Liquid | mm(in) | 6.35 (1/4) | 6.35 (1/4) |
| | | Gas | mm(in) | 12.7 (1/2) or 15.88 (5/8) *2 | 12.7 (1/2) or 15.88 (5/8) *2 |
| Connection method | | | | Flared | Flared |
| Between the indoor & outdoor unit | | Height difference | m | Max. 30 | Max. 30 |
| | | Piping length | m | 2 to 50 | 2 to 50 |
| Guaranteed operating range (Outdoor) | | Heating | °C | -25 to +24 | -25 to +24 |
| | | DHW | °C | -25 to +42 | -25 to +42 |
| | | Cooling | °C | +10 to +52 | +10 to +52 |
| Outlet water temp. (Max in Heating, Min in Cooling) | | Heating | °C | +60 | +60 |
| | | Cooling | °C | +5 | +5 |
| Nominal return water temperature range *1 | | Heating | °C | Due to the water quantity of system. See the graph of Section "1.4 Available range (2) Split-type units". | |
| | | Cooling | °C | | |
| Water Flow rate range | | | L/min | 7.2 to 22.9 | 7.2 to 22.9 |

*1 Due to the water quantity of system. See the graph of Section "1.4 Available range".
*2 The capacity depends on the length and diameter of refrigerant piping. Check the length and diameter to operate the air conditioner in an adequate capacity.

| MODEL NAME | | | PUZ-SWM100VAA | PUZ-SWM100YAA |
|---|---|---|---|---|
| POWER SUPPLY(Phase, voltage, frequency) | | | 1φ, 230 V, 50 Hz | 3φ, 400 V, 50 Hz |
| | Max. Current | A | 22.0 | 9.0 |
| Braker size | | A | 25 | 16 |
| Outer casing | | | Galvanized plate | Galvanized plate |
| External finish | | | Munsell N8.75, N2.75 (FRONT PANEL) | Munsell N8.75, N2.75 (FRONT PANEL) |
| Refrigerant control | | | Linear expansion valve | Linear expansion valve |
| Compressor | | | Hermetic scroll | Hermetic scroll |
| | Model | | DVB28FECMT | DVB28FEDMT |
| | Motor output | kW | 2.2 | 2.2 |
| | Start type | | Inverter | Inverter |
| | Protection devices | | HP switch<br>Discharge thermo<br>Comp. Surface thermo<br>Over current detection<br>Thermal Protector | HP switch<br>Discharge thermo<br>Comp. Surface thermo<br>Over current detection<br>Thermal Protector |
| | Oil | L | 0.9 | 0.9 |
| Base heater | Input | kW | - | - |
| Heat exchanger | Air | | Plate fin coil | Plate fin coil |
| | Water | | - | - |
| Fan | Fan(drive) x No. | | Propeller fan ×1 | Propeller fan ×1 |
| | Fan motor output | kW | 0.200 | 0.200 |
| | Air flow | $m^3$/min (CFM) | 62 (2190) | 62 (2190) |
| Defrost method | | | Reverse cycle | Reverse cycle |
| Noise level (SPL) | Heating | dBA | 44 | 44 |
| | Cooling | dBA | 47 | 47 |
| Noise level (PWL) | Heating | dBA | 58 | 58 |
| Dimensions | Width | mm(in) | 1050 (41-3/8) | 1050 (41-3/8) |
| | Depth | mm(in) | 480 (18-7/8) | 480 (18-7/8) |
| | Height | mm(in) | 1040 (40) | 1040 (40) |
| Weight | | kg(lbs) | 105.5 (233) | 113.5 (251) |
| Refrigerant | | | R32 | R32 |
| | Chargeless | kg(lbs) | 1.8 (3.97) | 1.8 (3.97) |
| | MAX. | kg(lbs) | 2.4 (5.29) | 2.4 (5.29) |
| Pipe size O.D. | Liquid | mm(in) | 6.35 (1/4) | 6.35 (1/4) |
| | Gas | mm(in) | 12.7 (1/2) or 15.88 (5/8) *2 | 12.7 (1/2) or 15.88 (5/8) *2 |
| Connection method | | | Flared | Flared |
| Between the indoor & outdoor unit | Height difference | m | Max. 30 | Max. 30 |
| | Piping length | m | 2 to 50 | 2 to 50 |
| Guaranteed operating range (Outdoor) | Heating | °C | -25 to +24 | -25 to +24 |
| | DHW | °C | -25 to +42 | -25 to +42 |
| | Cooling | °C | +10 to +52 | +10 to +52 |
| Outlet water temp. (Max in Heating, Min in Cooling) | Heating | °C | +60 | +60 |
| | Cooling | °C | +5 | +5 |
| Nominal return water temperature range *1 | Heating | °C | Due to the water quantity of system. See the graph of Section "1.4 Available range (2) Split-type units". | |
| | Cooling | °C | | |
| Water Flow rate range | | L/min | 7.2 to 28.7 | 7.2 to 28.7 |

*1 Due to the water quantity of system. See the graph of Section "1.4 Available range".
*2 The capacity depends on the length and diameter of refrigerant piping. Check the length and diameter to operate the air conditioner in an adequate capacity.

| MODEL NAME | | | | PUZ-SWM120VAA | PUZ-SWM120YAA |
|---|---|---|---|---|---|
| POWER SUPPLY(Phase, voltage, frequency) | | | | 1φ, 230 V, 50 Hz | 3φ, 400 V, 50 Hz |
| | Max. Current | | A | 28.0 | 12.0 |
| Braker size | | | A | 32 | 16 |
| Outer casing | | | | Galvanized plate | Galvanized plate |
| External finish | | | | Munsell N8.75, N2.75 (FRONT PANEL) | Munsell N8.75, N2.75 (FRONT PANEL) |
| Refrigerant control | | | | Linear expansion valve | Linear expansion valve |
| Compressor | | | | Hermetic scroll | Hermetic scroll |
| | Model | | | DVB28FECMT | DVB28FEDMT |
| | Motor output | | kW | 2.2 | 2.2 |
| | Start type | | | Inverter | Inverter |
| | Protection devices | | | HP switch<br>Discharge thermo<br>Comp. Surface thermo<br>Over current detection<br>Thermal Protector | HP switch<br>Discharge thermo<br>Comp. Surface thermo<br>Over current detection<br>Thermal Protector |
| | Oil | | L | 0.9 | 0.9 |
| Base heater | | Input | kW | - | - |
| Heat exchanger | | Air | | Plate fin coil | Plate fin coil |
| | | Water | | - | - |
| Fan | Fan(drive) x No. | | | Propeller fan ×1 | Propeller fan ×1 |
| | Fan motor output | | kW | 0.200 | 0.200 |
| | Air flow | | $m^3$/min (CFM) | 60 (2120) | 60 (2120) |
| Defrost method | | | | Reverse cycle | Reverse cycle |
| Noise level (SPL) | | Heating | dBA | 45 | 45 |
| | | Cooling | dBA | 48 | 48 |
| Noise level (PWL) | | Heating | dBA | 58 | 58 |
| Dimensions | | Width | mm(in) | 1050 (41-3/8) | 1050 (41-3/8) |
| | | Depth | mm(in) | 480 (18-7/8) | 480 (18-7/8) |
| | | Height | mm(in) | 1040 (40) | 1040 (40) |
| Weight | | | kg(lbs) | 112 (247) | 124.5 (275) |
| Refrigerant | | | | R32 | R32 |
| | | Chargeless | kg(lbs) | 1.8 (3.97) | 1.8 (3.97) |
| | | MAX. | kg(lbs) | 2.4 (5.29) | 2.4 (5.29) |
| Pipe size O.D. | | Liquid | mm(in) | 6.35 (1/4) | 6.35 (1/4) |
| | | Gas | mm(in) | 12.7 (1/2) or 15.88 (5/8) *2 | 12.7 (1/2) or 15.88 (5/8) *2 |
| Connection method | | | | Flared | Flared |
| Between the indoor & outdoor unit | | Height difference | m | Max. 30 | Max. 30 |
| | | Piping length | m | 2 to 30 (50 *3) | 2 to 30 (50 *3) |
| Guaranteed operating range (Outdoor) | | Heating | °C | -25 to +24 | -25 to +24 |
| | | DHW | °C | -25 to +42 | -25 to +42 |
| | | Cooling | °C | +10 to +52 | +10 to +52 |
| Outlet water temp. (Max in Heating, Min in Cooling) | | Heating | °C | +60 | +60 |
| | | Cooling | °C | +5 | +5 |
| Nominal return water temperature range *1 | | Heating | °C | Due to the water quantity of system. See the graph of Section "1.4 Available range (2) Split-type units". | |
| | | Cooling | °C | | |
| Water Flow rate range | | | L/min | 10.0 to 34.4 | 10.0 to 34.4 |

*1 Due to the water quantity of system. See the graph of Section "1.4 Available range".
*2 The capacity depends on the length and diameter of refrigerant piping. Check the length and diameter to operate the air conditioner in an adequate capacity.
*3 Piping length of 30 m or more is for heating only.

| MODEL NAME | | | PUZ-SWM140VAA | PUZ-SWM140YAA |
|---|---|---|---|---|
| POWER SUPPLY(Phase, voltage, frequency) | | | 1φ, 230 V, 50 Hz | 3φ, 400 V, 50 Hz |
| | Max. Current | A | 28.0 | 12.0 |
| Braker size | | A | 32 | 16 |
| Outer casing | | | Galvanized plate | Galvanized plate |
| External finish | | | Munsell N8.75, N2.75 (FRONT PANEL) | Munsell N8.75, N2.75 (FRONT PANEL) |
| Refrigerant control | | | Linear expansion valve | Linear expansion valve |
| Compressor | | | Hermetic scroll | Hermetic scroll |
| | Model | | DVB36FEAMT | DVB36FEBMT |
| | Motor output | kW | 3.6 | 3.6 |
| | Start type | | Inverter | Inverter |
| | Protection devices | | HP switch<br>Discharge thermo<br>Comp. Surface thermo<br>Over current detection<br>Thermal Protector | HP switch<br>Discharge thermo<br>Comp. Surface thermo<br>Over current detection<br>Thermal Protector |
| | Oil | L | 0.9 | 0.9 |
| Base heater | Input | kW | - | - |
| Heat exchanger | Air | | Plate fin coil | Plate fin coil |
| | Water | | - | - |
| Fan | Fan(drive) x No. | | Propeller fan ×1 | Propeller fan ×1 |
| | Fan motor output | kW | 0.200 | 0.200 |
| | Air flow | $m^3$/min (CFM) | 60 (2120) | 60 (2120) |
| Defrost method | | | Reverse cycle | Reverse cycle |
| Noise level (SPL) | Heating | dBA | 46 | 46 |
| | Cooling | dBA | 49 | 49 |
| Noise level (PWL) | Heating | dBA | 58 | 58 |
| Dimensions | Width | mm(in) | 1050 (41-3/8) | 1050 (41-3/8) |
| | Depth | mm(in) | 480 (18-7/8) | 480 (18-7/8) |
| | Height | mm(in) | 1040 (40) | 1040 (40) |
| Weight | | kg(lbs) | 113.5 (251) | 124.5 (275) |
| Refrigerant | | | R32 | R32 |
| | Chargeless | kg(lbs) | 1.8 (3.97) | 1.8 (3.97) |
| | MAX. | kg(lbs) | 2.4 (5.29) | 2.4 (5.29) |
| Pipe size O.D. | Liquid | mm(in) | 6.35 (1/4) | 6.35 (1/4) |
| | Gas | mm(in) | 12.7 (1/2) or 15.88 (5/8) *2 | 12.7 (1/2) or 15.88 (5/8) *2 |
| Connection method | | | Flared | Flared |
| Between the indoor & outdoor unit | Height difference | m | Max. 30 | Max. 30 |
| | Piping length | m | 2 to 30 (50 *3) | 2 to 30 (50 *3) |
| Guaranteed operating range (Outdoor) | Heating | °C | -25 to +24 | -25 to +24 |
| | DHW | °C | -25 to +42 | -25 to +42 |
| | Cooling | °C | +10 to +52 | +10 to +52 |
| Outlet water temp. (Max in Heating, Min in Cooling) | Heating | °C | +60 | +60 |
| | Cooling | °C | +5 | +5 |
| Nominal return water temperature range *1 | Heating | °C | Due to the water quantity of system. See the graph of Section "1.4 Available range (2) Split-type units". | |
| | Cooling | °C | | |
| Water Flow rate range | | L/min | 10.0 to 34.4 | 10.0 to 34.4 |

*1 Due to the water quantity of system. See the graph of Section "1.4 Available range".
*2 The capacity depends on the length and diameter of refrigerant piping. Check the length and diameter to operate the air conditioner in an adequate capacity.
*3 Piping length of 30 m or more is for heating only.

| MODEL NAME | | | | PUZ-SHWM60VAA | PUZ-SHWM80VAA |
|---|---|---|---|---|---|
| POWER SUPPLY(Phase, voltage, frequency) | | | | 1φ, 230 V, 50 Hz | 1φ, 230 V, 50 Hz |
| | Max. Current | | A | 13.5 | 19.0 |
| Braker size | | | A | 16 | 25 |
| Outer casing | | | | Galvanized plate | Galvanized plate |
| External finish | | | | Munsell N8.75, N2.75 (FRONT PANEL) | Munsell N8.75, N2.75 (FRONT PANEL) |
| Refrigerant control | | | | Linear expansion valve | Linear expansion valve |
| Compressor | | | | Hermetic scroll | Hermetic scroll |
| | Model | | | DVK28FECMT | DVK28FECMT |
| | Motor output | | kW | 2.2 | 2.2 |
| | Start type | | | Inverter | Inverter |
| | Protection devices | | | HP switch<br>Discharge thermo<br>Comp. Surface thermo<br>Over current detection<br>Thermal Protector | HP switch<br>Discharge thermo<br>Comp. Surface thermo<br>Over current detection<br>Thermal Protector |
| | Oil | | L | 0.9 | 0.9 |
| Base heater | | Input | kW | - | - |
| Heat exchanger | | Air | | Plate fin coil | Plate fin coil |
| | | Water | | - | - |
| Fan | Fan(drive) x No. | | | Propeller fan ×1 | Propeller fan ×1 |
| | Fan motor output | | kW | 0.200 | 0.200 |
| | Air flow | | $m^3$/min (CFM) | 58 (2050) | 58 (2050) |
| Defrost method | | | | Reverse cycle | Reverse cycle |
| Noise level (SPL) | | Heating | dBA | 40 | 41 |
| | | Cooling | dBA | 45 | 46 |
| Noise level (PWL) | | Heating | dBA | 54 | 54 |
| Dimensions | | Width | mm(in) | 1050 (41-3/8) | 1050 (41-3/8) |
| | | Depth | mm(in) | 480 (18-7/8) | 480 (18-7/8) |
| | | Height | mm(in) | 1040 (40) | 1040 (40) |
| Weight | | | kg(lbs) | 106 (234) | 106 (234) |
| Refrigerant | | | | R32 | R32 |
| | | Chargeless | kg(lbs) | 1.8 (3.97) | 1.8 (3.97) |
| | | MAX. | kg(lbs) | 2.4 (5.29) | 2.4 (5.29) |
| Pipe size O.D. | | Liquid | mm(in) | 6.35 (1/4) | 6.35 (1/4) |
| | | Gas | mm(in) | 12.7 (1/2) or 15.88 (5/8) *2 | 12.7 (1/2) or 15.88 (5/8) *2 |
| Connection method | | | | Flared | Flared |
| Between the indoor & outdoor unit | | Height difference | m | Max. 30 | Max. 30 |
| | | Piping length | m | 2 to 50 | 2 to 50 |
| Guaranteed operating range (Outdoor) | | Heating | °C | -30 to +24 | -30 to +24 |
| | | DHW | °C | -30 to +42 | -30 to +42 |
| | | Cooling | °C | +10 to +52 | +10 to +52 |
| Outlet water temp. (Max in Heating, Min in Cooling) | | Heating | °C | +60 | +60 |
| | | Cooling | °C | +5 | +5 |
| Nominal return water temperature range *1 | | Heating | °C | Due to the water quantity of system. See the graph of Section "1.4 Available range (2) Split-type units". | |
| | | Cooling | °C | | |
| Water Flow rate range | | | L/min | 7.2 to 22.9 | 7.2 to 22.9 |

*1 Due to the water quantity of system. See the graph of Section "1.4 Available range".
*2 The capacity depends on the length and diameter of refrigerant piping. Check the length and diameter to operate the air conditioner in an adequate capacity.

| MODEL NAME | | | PUZ-SHWM80YAA | PUZ-SHWM100VAA |
|---|---|---|---|---|
| POWER SUPPLY(Phase, voltage, frequency) | | | 3φ, 400 V, 50 Hz | 1φ, 230 V, 50 Hz |
| | Max. Current | A | 8.0 | 27.0 |
| Braker size | | A | 16 | 30 |
| Outer casing | | | Galvanized plate | Galvanized plate |
| External finish | | | Munsell N8.75, N2.75 (FRONT PANEL) | Munsell N8.75, N2.75 (FRONT PANEL) |
| Refrigerant control | | | Linear expansion valve | Linear expansion valve |
| Compressor | | | Hermetic scroll | Hermetic scroll |
| | Model | | DVK28FEDMT | DVK28FECMT |
| | Motor output | kW | 2.2 | 2.2 |
| | Start type | | Inverter | Inverter |
| | Protection devices | | HP switch<br>Discharge thermo<br>Comp. Surface thermo<br>Over current detection<br>Thermal Protector | HP switch<br>Discharge thermo<br>Comp. Surface thermo<br>Over current detection<br>Thermal Protector |
| | Oil | L | 0.9 | 0.9 |
| Base heater | Input | kW | - | - |
| Heat exchanger | Air | | Plate fin coil | Plate fin coil |
| | Water | | - | - |
| Fan | Fan(drive) x No. | | Propeller fan ×1 | Propeller fan ×1 |
| | Fan motor output | kW | 0.200 | 0.200 |
| | Air flow | $m^3$/min (CFM) | 58 (2050) | 62 (2190) |
| Defrost method | | | Reverse cycle | Reverse cycle |
| Noise level (SPL) | Heating | dBA | 41 | 44 |
| | Cooling | dBA | 46 | 47 |
| Noise level (PWL) | Heating | dBA | 54 | 58 |
| Dimensions | Width | mm(in) | 1050 (41-3/8) | 1050 (41-3/8) |
| | Depth | mm(in) | 480 (18-7/8) | 480 (18-7/8) |
| | Height | mm(in) | 1040 (40) | 1040 (40) |
| Weight | | kg(lbs) | 115 (254) | 106.5 (235) |
| Refrigerant | | | R32 | R32 |
| | Chargeless | kg(lbs) | 1.8 (3.97) | 1.8 (3.97) |
| | MAX. | kg(lbs) | 2.4 (5.29) | 2.4 (5.29) |
| Pipe size O.D. | Liquid | mm(in) | 6.35 (1/4) | 6.35 (1/4) |
| | Gas | mm(in) | 12.7 (1/2) or 15.88 (5/8) *2 | 12.7 (1/2) or 15.88 (5/8) *2 |
| Connection method | | | Flared | Flared |
| Between the indoor & outdoor unit | Height difference | m | Max. 30 | Max. 30 |
| | Piping length | m | 2 to 50 | 2 to 50 |
| Guaranteed operating range (Outdoor) | Heating | °C | -30 to +24 | -30 to +24 |
| | DHW | °C | -30 to +42 | -30 to +42 |
| | Cooling | °C | +10 to +52 | +10 to +52 |
| Outlet water temp. (Max in Heating, Min in Cooling) | Heating | °C | +60 | +60 |
| | Cooling | °C | +5 | +5 |
| Nominal return water temperature range *1 | Heating | °C | Due to the water quantity of system. See the graph of Section "1.4 Available range (2) Split-type units". | |
| | Cooling | °C | | |
| Water Flow rate range | | L/min | 7.2 to 22.9 | 7.2 to 28.7 |

*1 Due to the water quantity of system. See the graph of Section "1.4 Available range".
*2 The capacity depends on the length and diameter of refrigerant piping. Check the length and diameter to operate the air conditioner in an adequate capacity.

| MODEL NAME | | | | PUZ-SHWM100YAA | PUZ-SHWM120VAA |
|---|---|---|---|---|---|
| POWER SUPPLY(Phase, voltage, frequency) | | | | 3φ, 400 V, 50 Hz | 1φ, 230 V, 50 Hz |
| | Max. Current | | A | 9.0 | 28.0 |
| Braker size | | | A | 16 | 32 |
| Outer casing | | | | Galvanized plate | Galvanized plate |
| External finish | | | | Munsell N8.75, N2.75 (FRONT PANEL) | Munsell N8.75, N2.75 (FRONT PANEL) |
| Refrigerant control | | | | Linear expansion valve | Linear expansion valve |
| Compressor | | | | Hermetic scroll | Hermetic scroll |
| | Model | | | DVK28FEDMT | DVK28FECMT |
| | Motor output | | kW | 2.2 | 2.2 |
| | Start type | | | Inverter | Inverter |
| | Protection devices | | | HP switch<br>Discharge thermo<br>Comp. Surface thermo<br>Over current detection<br>Thermal Protector | HP switch<br>Discharge thermo<br>Comp. Surface thermo<br>Over current detection<br>Thermal Protector |
| | Oil | | L | 0.9 | 0.9 |
| Base heater | | Input | kW | - | - |
| Heat exchanger | | Air | | Plate fin coil | Plate fin coil |
| | | Water | | - | - |
| Fan | Fan(drive) x No. | | | Propeller fan ×1 | Propeller fan ×1 |
| | Fan motor output | | kW | 0.200 | 0.200 |
| | Air flow | | $m^3$/min (CFM) | 62 (2190) | 60 (2120) |
| Defrost method | | | | Reverse cycle | Reverse cycle |
| Noise level (SPL) | | Heating | dBA | 44 | 45 |
| | | Cooling | dBA | 47 | 48 |
| Noise level (PWL) | | Heating | dBA | 58 | 58 |
| Dimensions | | Width | mm(in) | 1050 (41-3/8) | 1050 (41-3/8) |
| | | Depth | mm(in) | 480 (18-7/8) | 480 (18-7/8) |
| | | Height | mm(in) | 1040 (40) | 1040 (40) |
| Weight | | | kg(lbs) | 115 (254) | 113.5 (251) |
| Refrigerant | | | | R32 | R32 |
| | | Chargeless | kg(lbs) | 1.8 (3.97) | 1.8 (3.97) |
| | | MAX. | kg(lbs) | 2.4 (5.29) | 2.4 (5.29) |
| Pipe size O.D. | | Liquid | mm(in) | 6.35 (1/4) | 6.35 (1/4) |
| | | Gas | mm(in) | 12.7 (1/2) or 15.88 (5/8) *2 | 12.7 (1/2) or 15.88 (5/8) *2 |
| Connection method | | | | Flared | Flared |
| Between the indoor & outdoor unit | | Height difference | m | Max. 30 | Max. 30 |
| | | Piping length | m | 2 to 50 | 2 to 30 (50 *3) |
| Guaranteed operating range (Outdoor) | | Heating | °C | -30 to +24 | -30 to +24 |
| | | DHW | °C | -30 to +42 | -30 to +42 |
| | | Cooling | °C | +10 to +52 | +10 to +52 |
| Outlet water temp. (Max in Heating, Min in Cooling) | | Heating | °C | +60 | +60 |
| | | Cooling | °C | +5 | +5 |
| Nominal return water temperature range *1 | | Heating | °C | Due to the water quantity of system. See the graph of Section "1.4 Available range (2) Split-type units". | |
| | | Cooling | °C | | |
| Water Flow rate range | | | L/min | 7.2 to 28.7 | 10.0 to 34.4 |

*1 Due to the water quantity of system. See the graph of Section "1.4 Available range".
*2 The capacity depends on the length and diameter of refrigerant piping. Check the length and diameter to operate the air conditioner in an adequate capacity.
*3 Piping length of 30 m or more is for heating only.

| MODEL NAME | | | PUZ-SHWM120YAA | PUZ-SHWM140VAA |
|---|---|---|---|---|
| POWER SUPPLY(Phase, voltage, frequency) | | | 3φ, 400 V, 50 Hz | 1φ, 230 V, 50 Hz |
| | Max. Current | A | 12.0 | 35.0 |
| Braker size | | A | 16 | 40 |
| Outer casing | | | Galvanized plate | Galvanized plate |
| External finish | | | Munsell N8.75, N2.75 (FRONT PANEL) | Munsell N8.75, N2.75 (FRONT PANEL) |
| Refrigerant control | | | Linear expansion valve | Linear expansion valve |
| Compressor | | | Hermetic scroll | Hermetic scroll |
| | Model | | DVK28FEDMT | DVK36FEAMT |
| | Motor output | kW | 2.2 | 3.6 |
| | Start type | | Inverter | Inverter |
| | Protection devices | | HP switch<br>Discharge thermo<br>Comp. Surface thermo<br>Over current detection<br>Thermal Protector | HP switch<br>Discharge thermo<br>Comp. Surface thermo<br>Over current detection<br>Thermal Protector |
| | Oil | L | 0.9 | 0.9 |
| Base heater | Input | kW | - | - |
| Heat exchanger | Air | | Plate fin coil | Plate fin coil |
| | Water | | - | - |
| Fan | Fan(drive) x No. | | Propeller fan ×1 | Propeller fan ×1 |
| | Fan motor output | kW | 0.200 | 0.200 |
| | Air flow | $m^3$/min (CFM) | 60 (2120) | 60 (2120) |
| Defrost method | | | Reverse cycle | Reverse cycle |
| Noise level (SPL) | Heating | dBA | 45 | 46 |
| | Cooling | dBA | 48 | 49 |
| Noise level (PWL) | Heating | dBA | 58 | 58 |
| Dimensions | Width | mm(in) | 1050 (41-3/8) | 1050 (41-3/8) |
| | Depth | mm(in) | 480 (18-7/8) | 480 (18-7/8) |
| | Height | mm(in) | 1040 (40) | 1040 (40) |
| Weight | | kg(lbs) | 125.5 (277) | 114.5 (253) |
| Refrigerant | | | R32 | R32 |
| | Chargeless | kg(lbs) | 1.8 (3.97) | 1.8 (3.97) |
| | MAX. | kg(lbs) | 2.4 (5.29) | 2.4 (5.29) |
| Pipe size O.D. | Liquid | mm(in) | 6.35 (1/4) | 6.35 (1/4) |
| | Gas | mm(in) | 12.7 (1/2) or 15.88 (5/8) *2 | 12.7 (1/2) or 15.88 (5/8) *2 |
| Connection method | | | Flared | Flared |
| Between the indoor & outdoor unit | Height difference | m | Max. 30 | Max. 30 |
| | Piping length | m | 2 to 30 (50 *3) | 2 to 30 (50 *3) |
| Guaranteed operating range (Outdoor) | Heating | °C | -30 to +24 | -30 to +24 |
| | DHW | °C | -30 to +42 | -30 to +42 |
| | Cooling | °C | +10 to +52 | +10 to +52 |
| Outlet water temp. (Max in Heating, Min in Cooling) | Heating | °C | +60 | +60 |
| | Cooling | °C | +5 | +5 |
| Nominal return water temperature range *1 | Heating | °C | Due to the water quantity of system. See the graph of Section "1.4 Available range (2) Split-type units". | |
| | Cooling | °C | | |
| Water Flow rate range | | L/min | 10.0 to 34.4 | 10.0 to 34.4 |

*1 Due to the water quantity of system. See the graph of Section "1.4 Available range".
*2 The capacity depends on the length and diameter of refrigerant piping. Check the length and diameter to operate the air conditioner in an adequate capacity.
*3 Piping length of 30 m or more is for heating only.

| MODEL NAME | | | | PUZ-SHWM140YAA |
|---|---|---|---|---|
| POWER SUPPLY(Phase, voltage, frequency) | | | | 3φ, 400 V, 50 Hz |
| | Max. Current | | A | 12.0 |
| Braker size | | | A | 16 |
| Outer casing | | | | Galvanized plate |
| External finish | | | | Munsell N8.75, N2.75 (FRONT PANEL) |
| Refrigerant control | | | | Linear expansion valve |
| Compressor | | | | Hermetic scroll |
| | Model | | | DVK36FEBMT |
| | Motor output | | kW | 3.6 |
| | Start type | | | Inverter |
| | Protection devices | | | HP switch<br>Discharge thermo<br>Comp. Surface thermo<br>Over current detection<br>Thermal Protector |
| | Oil | | L | 0.9 |
| Base heater | | Input | kW | - |
| Heat exchanger | | Air | | Plate fin coil |
| | | Water | | - |
| Fan | Fan(drive) x No. | | | Propeller fan ×1 |
| | Fan motor output | | kW | 0.200 |
| | Air flow | | $m^3$/min (CFM) | 60 (2120) |
| Defrost method | | | | Reverse cycle |
| Noise level (SPL) | | Heating | dBA | 46 |
| | | Cooling | dBA | 49 |
| Noise level (PWL) | | Heating | dBA | 58 |
| Dimensions | | Width | mm(in) | 1050 (41-3/8) |
| | | Depth | mm(in) | 480 (18-7/8) |
| | | Height | mm(in) | 1040 (40) |
| Weight | | | kg(lbs) | 126 (278) |
| Refrigerant | | | | R32 |
| | | Chargeless | kg(lbs) | 1.8 (3.97) |
| | | MAX. | kg(lbs) | 2.4 (5.29) |
| Pipe size O.D. | | Liquid | mm(in) | 6.35 (1/4) |
| | | Gas | mm(in) | 12.7 (1/2) or 15.88 (5/8) *2 |
| Connection method | | | | Flared |
| Between the indoor & outdoor unit | | Height difference | m | Max. 30 |
| | | Piping length | m | 2 to 30 (50 *3) |
| Guaranteed operating range (Outdoor) | | Heating | °C | -30 to +24 |
| | | DHW | °C | -30 to +42 |
| | | Cooling | °C | +10 to +52 |
| Outlet water temp. (Max in Heating, Min in Cooling) | | Heating | °C | +60 |
| | | Cooling | °C | +5 |
| Nominal return water temperature range *1 | | Heating | °C | Due to the water quantity of system. See the graph of Section "1.4 Available range (2) Split-type units". |
| | | Cooling | °C | |
| Water Flow rate range | | | L/min | 7.2 to 28.7 |

*1 Due to the water quantity of system. See the graph of Section "1.4 Available range".
*2 The capacity depends on the length and diameter of refrigerant piping. Check the length and diameter to operate the air conditioner in an adequate capacity.
*3 Piping length of 30 m or more is for heating only.

| MODEL NAME | | | PUD-SWM60VAA(-BS) | PUD-SHWM60VAA(-BS) |
|---|---|---|---|---|
| POWER SUPPLY(Phase, voltage, frequency) | | | 1φ, 230 V, 50 Hz | 1φ, 230 V, 50 Hz |
| | Max. Current | A | 16.5 | 16.5 |
| Braker size | | A | 20 | 20 |
| Outer casing | | | Galvanized plate | Galvanized plate |
| External finish | | | Munsell N8.75, N2.75 (FRONT PANEL) | Munsell N8.75, N2.75 (FRONT PANEL) |
| Refrigerant control | | | Linear expansion valve | Linear expansion valve |
| Compressor | | | Hermetic scroll | Hermetic scroll |
| | Model | | DVB28FBAMT | DVK28FBAMT |
| | Motor output | kW | 2.2 | 2.2 |
| | Start type | | Inverter | Inverter |
| | Protection devices | | HP switch<br>Discharge thermo<br>Comp. Surface thermo<br>Over current detection | HP switch<br>Discharge thermo<br>Comp. Surface thermo<br>Over current detection |
| | Oil | L | 0.9 | 0.9 |
| Crankcase heater | | | - | - |
| Heat exchanger | Air | | Plate fin coil | Plate fin coil |
| | Water | | - | - |
| Fan | Fan(drive) x No. | | Propeller fan x1 | Propeller fan x1 |
| | Fan motor output | kW | 0.074 | 0.074 |
| | Air flow | $m^3$/min (CFM) | 40 (1410) | 40 (1410) |
| Defrost method | | | Reverse cycle | Reverse cycle |
| Noise level (SPL) | Heating | dBA | 41 | 41 |
| | Cooling | dBA | - | - |
| Noise level (PWL) | Heating | dBA | 55 | 55 |
| Dimensions | Width | mm(in) | 1050 (41-5/16) | 1050 (41-5/16) |
| | Depth | mm(in) | 480 (18-7/8) | 480 (18-7/8) |
| | Height | mm(in) | 1020 (40-3/16) | 1020 (40-3/16) |
| Weight | | kg(lbs) | 101 (223) | 102 (225) |
| Refrigerant | | | R32 | R32 |
| | Chargeless | kg(lbs) | 1.3 (2.9) | 1.4 (3.1) |
| | MAX. | kg(lbs) | 1.6 (3.5) | 1.7 (3.8) |
| Pipe size O.D. | Liquid | mm(in) | 6.35 (1/4) | 6.35 (1/4) |
| | Gas | mm(in) | 12.7 (1/2) | 12.7 (1/2) |
| Connection method | | | Flared | Flared |
| Between the indoor & outdoor unit | Height difference | m | Max. 30 | Max. 30 |
| | Piping length | m | 2 to 30 | 2 to 30 |
| Guaranteed operating range (Outdoor) | Heating | °C | -25 to +24 | -28 to +24 |
| | DHW | °C | -25 to +35 | -28 to +35 |
| | Cooling | °C | - | - |
| Outlet water temp. (Max in Heating, Min in Cooling) | Heating | °C | +60 | +60 |
| | Cooling | °C | - | - |
| Nominal return water temperature range *1 | Heating | °C | +10 to +59 | +10 to +59 |
| | Cooling | °C | - | - |
| Water Flow rate range | | L/min | 9.0 to 22.9 | 9.0 to 22.9 |

*1 Due to the water quantity of system. See the graph of Section "1.4 Available range".

| MODEL NAME | | | PUD-SWM80VAA(-BS) | PUD-SHWM80VAA(-BS) |
|---|---|---|---|---|
| POWER SUPPLY(Phase, voltage, frequency) | | | 1φ, 230 V, 50 Hz | 1φ, 230 V, 50 Hz |
| | Max. Current | A | 22.0 | 22.0 |
| Braker size | | A | 25 | 25 |
| Outer casing | | | Galvanized plate | Galvanized plate |
| External finish | | | Munsell N8.75, N2.75 (FRONT PANEL) | Munsell N8.75, N2.75 (FRONT PANEL) |
| Refrigerant control | | | Linear expansion valve | Linear expansion valve |
| Compressor | | | Hermetic scroll | Hermetic scroll |
| | Model | | DVB28FBAMT | DVK28FBAMT |
| | Motor output | kW | 2.2 | 2.2 |
| | Start type | | Inverter | Inverter |
| | Protection devices | | HP switch<br>Discharge thermo<br>Comp. Surface thermo<br>Over current detection | HP switch<br>Discharge thermo<br>Comp. Surface thermo<br>Over current detection |
| | Oil | L | 0.9 | 0.9 |
| Crankcase heater | | | - | - |
| Heat exchanger | Air | | Plate fin coil | Plate fin coil |
| | Water | | - | - |
| Fan | Fan(drive) x No. | | Propeller fan x1 | Propeller fan x1 |
| | Fan motor output | kW | 0.074 | 0.074 |
| | Air flow | $m^3$/min (CFM) | 40 (1410) | 40 (1410) |
| Defrost method | | | Reverse cycle | Reverse cycle |
| Noise level (SPL) | Heating | dBA | 42 | 42 |
| | Cooling | dBA | - | - |
| Noise level (PWL) | Heating | dBA | 56 | 56 |
| Dimensions | Width | mm(in) | 1050 (41-5/16) | 1050 (41-5/16) |
| | Depth | mm(in) | 480 (18-7/8) | 480 (18-7/8) |
| | Height | mm(in) | 1020 (40-3/16) | 1020 (40-3/16) |
| Weight | | kg(lbs) | 101 (223) | 102 (225) |
| Refrigerant | | | R32 | R32 |
| | Chargeless | kg(lbs) | 1.3 (2.9) | 1.4 (3.1) |
| | MAX. | kg(lbs) | 1.6 (3.5) | 1.7 (3.8) |
| Pipe size O.D. | Liquid | mm(in) | 6.35 (1/4) | 6.35 (1/4) |
| | Gas | mm(in) | 12.7 (1/2) | 12.7 (1/2) |
| Connection method | | | Flared | Flared |
| Between the indoor & outdoor unit | Height difference | m | Max. 30 | Max. 30 |
| | Piping length | m | 2 to 30 | 2 to 30 |
| Guaranteed operating range (Outdoor) | Heating | °C | -25 to +24 | -28 to +24 |
| | DHW | °C | -25 to +35 | -28 to +35 |
| | Cooling | °C | - | - |
| Outlet water temp. (Max in Heating, Min in Cooling) | Heating | °C | +60 | +60 |
| | Cooling | °C | - | - |
| Nominal return water temperature range *1 | Heating | °C | +10 to +59 | +10 to +59 |
| | Cooling | °C | - | - |
| Water Flow rate range | | L/min | 9.0 to 22.9 | 9.0 to 22.9 |

*1 Due to the water quantity of system. See the graph of Section "1.4 Available range".

| MODEL NAME | | | PUD-SWM80YAA(-BS) | PUD-SHWM80YAA(-BS) |
|---|---|---|---|---|
| POWER SUPPLY(Phase, voltage, frequency) | | | 3φ, 400 V, 50 Hz | 3φ, 400 V, 50 Hz |
| | Max. Current | A | 8.0 | 8.0 |
| Braker size | | A | 16 | 16 |
| Outer casing | | | Galvanized plate | Galvanized plate |
| External finish | | | Munsell N8.75, N2.75 (FRONT PANEL) | Munsell N8.75, N2.75 (FRONT PANEL) |
| Refrigerant control | | | Linear expansion valve | Linear expansion valve |
| Compressor | | | Hermetic scroll | Hermetic scroll |
| | Model | | DVB28FBBMT | DVK28FBBMT |
| | Motor output | kW | 2.2 | 2.2 |
| | Start type | | Inverter | Inverter |
| | Protection devices | | HP switch<br>Discharge thermo<br>Comp. Surface thermo<br>Over current detection | HP switch<br>Discharge thermo<br>Comp. Surface thermo<br>Over current detection |
| | Oil | L | 0.9 | 0.9 |
| Crankcase heater | | | - | - |
| Heat exchanger | Air | | Plate fin coil | Plate fin coil |
| | Water | | - | - |
| Fan | Fan(drive) x No. | | Propeller fan x1 | Propeller fan x1 |
| | Fan motor output | kW | 0.074 | 0.074 |
| | Air flow | $m^3$/min (CFM) | 40 (1410) | 40 (1410) |
| Defrost method | | | Reverse cycle | Reverse cycle |
| Noise level (SPL) | Heating | dBA | 42 | 42 |
| | Cooling | dBA | - | - |
| Noise level (PWL) | Heating | dBA | 56 | 56 |
| Dimensions | Width | mm(in) | 1050 (41-5/16) | 1050 (41-5/16) |
| | Depth | mm(in) | 480 (18-7/8) | 480 (18-7/8) |
| | Height | mm(in) | 1020 (40-3/16) | 1020 (40-3/16) |
| Weight | | kg(lbs) | 114 (251) | 115 (254) |
| Refrigerant | | | R32 | R32 |
| | Chargeless | kg(lbs) | 1.3 (2.9) | 1.4 (3.1) |
| | MAX. | kg(lbs) | 1.6 (3.5) | 1.7 (3.8) |
| Pipe size O.D. | Liquid | mm(in) | 6.35 (1/4) | 6.35 (1/4) |
| | Gas | mm(in) | 12.7 (1/2) | 12.7 (1/2) |
| Connection method | | | Flared | Flared |
| Between the indoor & outdoor unit | Height difference | m | Max. 30 | Max. 30 |
| | Piping length | m | 2 to 30 | 2 to 30 |
| Guaranteed operating range (Outdoor) | Heating | °C | -25 to +24 | -28 to +24 |
| | DHW | °C | -25 to +35 | -28 to +35 |
| | Cooling | °C | - | - |
| Outlet water temp. (Max in Heating, Min in Cooling) | Heating | °C | +60 | +60 |
| | Cooling | °C | - | - |
| Nominal return water temperature range *1 | Heating | °C | +10 to +59 | +10 to +59 |
| | Cooling | °C | - | - |
| Water Flow rate range | | L/min | 9.0 to 22.9 | 9.0 to 22.9 |

*1 Due to the water quantity of system. See the graph of Section "1.4 Available range".

| MODEL NAME | | | PUD-SWM100VAA(-BS) | PUD-SHWM100VAA(-BS) |
|---|---|---|---|---|
| POWER SUPPLY(Phase, voltage, frequency) | | | 1φ, 230 V, 50 Hz | 1φ, 230 V, 50 Hz |
| | Max. Current | A | 26.0 | 26.0 |
| Braker size | | A | 30 | 30 |
| Outer casing | | | Galvanized plate | Galvanized plate |
| External finish | | | Munsell N8.75, N2.75 (FRONT PANEL) | Munsell N8.75, N2.75 (FRONT PANEL) |
| Refrigerant control | | | Linear expansion valve | Linear expansion valve |
| Compressor | | | Hermetic scroll | Hermetic scroll |
| | Model | | DVB28FBAMT | DVK28FBAMT |
| | Motor output | kW | 2.2 | 2.2 |
| | Start type | | Inverter | Inverter |
| | Protection devices | | HP switch<br>Discharge thermo<br>Comp. Surface thermo<br>Over current detection | HP switch<br>Discharge thermo<br>Comp. Surface thermo<br>Over current detection |
| | Oil | L | 0.9 | 0.9 |
| Crankcase heater | | | - | - |
| Heat exchanger | Air | | Plate fin coil | Plate fin coil |
| | Water | | - | - |
| Fan | Fan(drive) x No. | | Propeller fan x1 | Propeller fan x1 |
| | Fan motor output | kW | 0.200 | 0.200 |
| | Air flow | $m^3$/min (CFM) | 50 (1760) | 50 (1760) |
| Defrost method | | | Reverse cycle | Reverse cycle |
| Noise level (SPL) | Heating | dBA | 44 | 44 |
| | Cooling | dBA | - | - |
| Noise level (PWL) | Heating | dBA | 59 | 59 |
| Dimensions | Width | mm(in) | 1050 (41-5/16) | 1050 (41-5/16) |
| | Depth | mm(in) | 480 (18-7/8) | 480 (18-7/8) |
| | Height | mm(in) | 1020 (40-3/16) | 1020 (40-3/16) |
| Weight | | kg(lbs) | 107 (236) | 108 (238) |
| Refrigerant | | | R32 | R32 |
| | Chargeless | kg(lbs) | 1.6 (3.5) | 1.7 (3.8) |
| | MAX. | kg(lbs) | 1.83 (4.0) | 1.83 (4.0) |
| Pipe size O.D. | Liquid | mm(in) | 6.35 (1/4) | 6.35 (1/4) |
| | Gas | mm(in) | 12.7 (1/2) | 12.7 (1/2) |
| Connection method | | | Flared | Flared |
| Between the indoor & outdoor unit | Height difference | m | Max. 30 | Max. 30 |
| | Piping length | m | 2 to 30 | 2 to 30 |
| Guaranteed operating range (Outdoor) | Heating | °C | -25 to +24 | -28 to +24 |
| | DHW | °C | -25 to +35 | -28 to +35 |
| | Cooling | °C | - | - |
| Outlet water temp. (Max in Heating, Min in Cooling) | Heating | °C | +60 | +60 |
| | Cooling | °C | - | - |
| Nominal return water temperature range *1 | Heating | °C | +10 to +59 | +10 to +59 |
| | Cooling | °C | - | - |
| Water Flow rate range | | L/min | 14.3 to 34.4 | 14.3 to 34.4 |

*1 Due to the water quantity of system. See the graph of Section "1.4 Available range".

| MODEL NAME | | | PUD-SWM100YAA(-BS) | PUD-SHWM100YAA(-BS) |
|---|---|---|---|---|
| POWER SUPPLY(Phase, voltage, frequency) | | | 3φ, 400 V, 50 Hz | 3φ, 400 V, 50 Hz |
| | Max. Current | A | 10.0 | 10.0 |
| Braker size | | A | 16 | 16 |
| Outer casing | | | Galvanized plate | Galvanized plate |
| External finish | | | Munsell N8.75, N2.75 (FRONT PANEL) | Munsell N8.75, N2.75 (FRONT PANEL) |
| Refrigerant control | | | Linear expansion valve | Linear expansion valve |
| Compressor | | | Hermetic scroll | Hermetic scroll |
| | Model | | DVB28FBBMT | DVK28FBBMT |
| | Motor output | kW | 2.2 | 2.2 |
| | Start type | | Inverter | Inverter |
| | Protection devices | | HP switch<br>Discharge thermo<br>Comp. Surface thermo<br>Over current detection | HP switch<br>Discharge thermo<br>Comp. Surface thermo<br>Over current detection |
| | Oil | L | 0.9 | 0.9 |
| Crankcase heater | | | - | - |
| Heat exchanger | Air | | Plate fin coil | Plate fin coil |
| | Water | | - | - |
| Fan | Fan(drive) x No. | | Propeller fan x1 | Propeller fan x1 |
| | Fan motor output | kW | 0.200 | 0.200 |
| | Air flow | $m^3$/min (CFM) | 50 (1760) | 50 (1760) |
| Defrost method | | | Reverse cycle | Reverse cycle |
| Noise level (SPL) | Heating | dBA | 44 | 44 |
| | Cooling | dBA | - | - |
| Noise level (PWL) | Heating | dBA | 59 | 59 |
| Dimensions | Width | mm(in) | 1050 (41-5/16) | 1050 (41-5/16) |
| | Depth | mm(in) | 480 (18-7/8) | 480 (18-7/8) |
| | Height | mm(in) | 1020 (40-3/16) | 1020 (40-3/16) |
| Weight | | kg(lbs) | 120 (265) | 121 (267) |
| Refrigerant | | | R32 | R32 |
| | Chargeless | kg(lbs) | 1.6 (3.5) | 1.7 (3.8) |
| | MAX. | kg(lbs) | 1.83 (4.0) | 1.83 (4.0) |
| Pipe size O.D. | Liquid | mm(in) | 6.35 (1/4) | 6.35 (1/4) |
| | Gas | mm(in) | 12.7 (1/2) | 12.7 (1/2) |
| Connection method | | | Flared | Flared |
| Between the indoor & outdoor unit | Height difference | m | Max. 30 | Max. 30 |
| | Piping length | m | 2 to 30 | 2 to 30 |
| Guaranteed operating range (Outdoor) | Heating | °C | -25 to +24 | -28 to +24 |
| | DHW | °C | -25 to +35 | -28 to +35 |
| | Cooling | °C | - | - |
| Outlet water temp. (Max in Heating, Min in Cooling) | Heating | °C | +60 | +60 |
| | Cooling | °C | - | - |
| Nominal return water temperature range *1 | Heating | °C | +10 to +59 | +10 to +59 |
| | Cooling | °C | - | - |
| Water Flow rate range | | L/min | 14.3 to 34.4 | 14.3 to 34.4 |

*1 Due to the water quantity of system. See the graph of Section "1.4 Available range".

| MODEL NAME | | | PUD-SWM120VAA(-BS) | PUD-SHWM120VAA(-BS) |
|---|---|---|---|---|
| POWER SUPPLY(Phase, voltage, frequency) | | | 1φ, 230 V, 50 Hz | 1φ, 230 V, 50 Hz |
| | Max. Current | A | 28.0 | 28.0 |
| Braker size | | A | 32 | 32 |
| Outer casing | | | Galvanized plate | Galvanized plate |
| External finish | | | Munsell N8.75, N2.75 (FRONT PANEL) | Munsell N8.75, N2.75 (FRONT PANEL) |
| Refrigerant control | | | Linear expansion valve | Linear expansion valve |
| Compressor | | | Hermetic scroll | Hermetic scroll |
| | Model | | DVB28FBAMT | DVK28FBAMT |
| | Motor output | kW | 2.2 | 2.2 |
| | Start type | | Inverter | Inverter |
| | Protection devices | | HP switch<br>Discharge thermo<br>Comp. Surface thermo<br>Over current detection | HP switch<br>Discharge thermo<br>Comp. Surface thermo<br>Over current detection |
| | Oil | L | 0.9 | 0.9 |
| Crankcase heater | | | - | - |
| Heat exchanger | Air | | Plate fin coil | Plate fin coil |
| | Water | | - | - |
| Fan | Fan(drive) x No. | | Propeller fan x1 | Propeller fan x1 |
| | Fan motor output | kW | 0.200 | 0.200 |
| | Air flow | $m^3$/min (CFM) | 50 (1760) | 50 (1760) |
| Defrost method | | | Reverse cycle | Reverse cycle |
| Noise level (SPL) | Heating | dBA | 46 | 46 |
| | Cooling | dBA | - | - |
| Noise level (PWL) | Heating | dBA | 60 | 60 |
| Dimensions | Width | mm(in) | 1050 (41-5/16) | 1050 (41-5/16) |
| | Depth | mm(in) | 480 (18-7/8) | 480 (18-7/8) |
| | Height | mm(in) | 1020 (40-3/16) | 1020 (40-3/16) |
| Weight | | kg(lbs) | 107 (236) | 108 (238) |
| Refrigerant | | | R32 | R32 |
| | Chargeless | kg(lbs) | 1.6 (3.5) | 1.7 (3.8) |
| | MAX. | kg(lbs) | 1.83 (4.0) | 1.83 (4.0) |
| Pipe size O.D. | Liquid | mm(in) | 6.35 (1/4) | 6.35 (1/4) |
| | Gas | mm(in) | 12.7 (1/2) | 12.7 (1/2) |
| Connection method | | | Flared | Flared |
| Between the indoor & outdoor unit | Height difference | m | Max. 30 | Max. 30 |
| | Piping length | m | 2 to 30 | 2 to 30 |
| Guaranteed operating range (Outdoor) | Heating | °C | -25 to +24 | -28 to +24 |
| | DHW | °C | -25 to +35 | -28 to +35 |
| | Cooling | °C | - | - |
| Outlet water temp. (Max in Heating, Min in Cooling) | Heating | °C | +60 | +60 |
| | Cooling | °C | - | - |
| Nominal return water temperature range *1 | Heating | °C | +10 to +59 | +10 to +59 |
| | Cooling | °C | - | - |
| Water Flow rate range | | L/min | 14.3 to 34.4 | 14.3 to 34.4 |

*1 Due to the water quantity of system. See the graph of Section "1.4 Available range".

| MODEL NAME | | | PUD-SWM120YAA(-BS) | PUD-SHWM120YAA(-BS) |
|---|---|---|---|---|
| POWER SUPPLY(Phase, voltage, frequency) | | | 3φ, 400 V, 50 Hz | 3φ, 400 V, 50 Hz |
| | Max. Current | A | 12.0 | 12.0 |
| Braker size | | A | 16 | 16 |
| Outer casing | | | Galvanized plate | Galvanized plate |
| External finish | | | Munsell N8.75, N2.75 (FRONT PANEL) | Munsell N8.75, N2.75 (FRONT PANEL) |
| Refrigerant control | | | Linear expansion valve | Linear expansion valve |
| Compressor | | | Hermetic scroll | Hermetic scroll |
| | Model | | DVB28FBBMT | DVK28FBBMT |
| | Motor output | kW | 2.2 | 2.2 |
| | Start type | | Inverter | Inverter |
| | Protection devices | | HP switch<br>Discharge thermo<br>Comp. Surface thermo<br>Over current detection | HP switch<br>Discharge thermo<br>Comp. Surface thermo<br>Over current detection |
| | Oil | L | 0.9 | 0.9 |
| Crankcase heater | | | - | - |
| Heat exchanger | Air | | Plate fin coil | Plate fin coil |
| | Water | | - | - |
| Fan | Fan(drive) x No. | | Propeller fan x1 | Propeller fan x1 |
| | Fan motor output | kW | 0.200 | 0.200 |
| | Air flow | $m^3$/min (CFM) | 50 (1760) | 50 (1760) |
| Defrost method | | | Reverse cycle | Reverse cycle |
| Noise level (SPL) | Heating | dBA | 46 | 46 |
| | Cooling | dBA | - | - |
| Noise level (PWL) | Heating | dBA | 60 | 60 |
| Dimensions | Width | mm(in) | 1050 (41-5/16) | 1050 (41-5/16) |
| | Depth | mm(in) | 480 (18-7/8) | 480 (18-7/8) |
| | Height | mm(in) | 1020 (40-3/16) | 1020 (40-3/16) |
| Weight | | kg(lbs) | 120 (265) | 121 (267) |
| Refrigerant | | | R32 | R32 |
| | Chargeless | kg(lbs) | 1.6 (3.5) | 1.7 (3.8) |
| | MAX. | kg(lbs) | 1.83 (4.0) | 1.83 (4.0) |
| Pipe size O.D. | Liquid | mm(in) | 6.35 (1/4) | 6.35 (1/4) |
| | Gas | mm(in) | 12.7 (1/2) | 12.7 (1/2) |
| Connection method | | | Flared | Flared |
| Between the indoor & outdoor unit | Height difference | m | Max. 30 | Max. 30 |
| | Piping length | m | 2 to 30 | 2 to 30 |
| Guaranteed operating range (Outdoor) | Heating | °C | -25 to +24 | -28 to +24 |
| | DHW | °C | -25 to +35 | -28 to +35 |
| | Cooling | °C | - | - |
| Outlet water temp. (Max in Heating, Min in Cooling) | Heating | °C | +60 | +60 |
| | Cooling | °C | - | - |
| Nominal return water temperature range *1 | Heating | °C | +10 to +59 | +10 to +59 |
| | Cooling | °C | - | - |
| Water Flow rate range | | L/min | 14.3 to 34.4 | 14.3 to 34.4 |

*1 Due to the water quantity of system. See the graph of Section "1.4 Available range".

| MODEL NAME | | | PUD-SHWM140VAA(-BS) | PUD-SHWM140YAA(-BS) |
|---|---|---|---|---|
| POWER SUPPLY(Phase, voltage, frequency) | | | 1φ, 230 V, 50 Hz | 3φ, 400 V, 50 Hz |
| | Max. Current | A | 35.0 | 12.0 |
| Braker size | | A | 40 | 16 |
| Outer casing | | | Galvanized plate | Galvanized plate |
| External finish | | | Munsell N8.75, N2.75 (FRONT PANEL) | Munsell N8.75, N2.75 (FRONT PANEL) |
| Refrigerant control | | | Linear expansion valve | Linear expansion valve |
| Compressor | | | Hermetic scroll | Hermetic scroll |
| | Model | | DVK36FBEMT | DVK36FBBMT |
| | Motor output | kW | 3.6 | 3.6 |
| | Start type | | Inverter | Inverter |
| | Protection devices | | HP switch<br>Discharge thermo<br>Comp. Surface thermo<br>Over current detection | HP switch<br>Discharge thermo<br>Comp. Surface thermo<br>Over current detection |
| | Oil | L | 0.9 | 0.9 |
| Crankcase heater | | | - | - |
| Heat exchanger | Air | | Plate fin coil | Plate fin coil |
| | Water | | - | - |
| Fan | Fan(drive) x No. | | Propeller fan x1 | Propeller fan x1 |
| | Fan motor output | kW | 0.200 | 0.200 |
| | Air flow | $m^3$/min (CFM) | 50 (1760) | 50 (1760) |
| Defrost method | | | Reverse cycle | Reverse cycle |
| Noise level (SPL) | Heating | dBA | 48 | 48 |
| | Cooling | dBA | - | - |
| Noise level (PWL) | Heating | dBA | 62 | 62 |
| Dimensions | Width | mm(in) | 1050 (41-5/16) | 1050 (41-5/16) |
| | Depth | mm(in) | 480 (18-7/8) | 480 (18-7/8) |
| | Height | mm(in) | 1020 (40-3/16) | 1020 (40-3/16) |
| Weight | | kg(lbs) | 110 (243) | 122 (269) |
| Refrigerant | | | R32 | R32 |
| | Chargeless | kg(lbs) | 1.7 (3.8) | 1.7 (3.8) |
| | MAX. | kg(lbs) | 1.83 (4.0) | 1.83 (4.0) |
| Pipe size O.D. | Liquid | mm(in) | 6.35 (1/4) | 6.35 (1/4) |
| | Gas | mm(in) | 12.7 (1/2) | 12.7 (1/2) |
| Connection method | | | Flared | Flared |
| Between the indoor & outdoor unit | Height difference | m | Max. 25 | Max. 25 |
| | Piping length | m | 2 to 25 | 2 to 25 |
| Guaranteed operating range (Outdoor) | Heating | °C | -28 to +24 | -28 to +24 |
| | DHW | °C | -28 to +35 | -28 to +35 |
| | Cooling | °C | - | - |
| Outlet water temp. (Max in Heating, Min in Cooling) | Heating | °C | +60 | +60 |
| | Cooling | °C | - | - |
| Nominal return water temperature range *1 | Heating | °C | +10 to +59 | +10 to +59 |
| | Cooling | °C | - | - |
| Water Flow rate range | | L/min | 14.3 to 34.4 | 14.3 to 34.4 |

*1 Due to the water quantity of system. See the graph of Section "1.4 Available range".

| MODEL NAME | | | | PXZ-4F75VG | PXZ-5F85VG |
|---|---|---|---|---|---|
| POWER SUPPLY(Phase, voltage, frequency) | | | | 1φ, 230V, 50Hz | 1φ, 230V, 50Hz |
| | Max. Current | | A | 18.0 | 21.4 |
| Braker size | | | A | 25.0 | 25.0 |
| Outer casing | | | | Galvanized plate | Galvanized plate |
| External finish | | | | Munsell No. 3Y 7.8/1.1 | Munsell No. 3Y 7.8/1.1 |
| Refrigerant control | | | | Linear expansion valve | Linear expansion valve |
| Compressor | | | | Hermetic twin rotary | Hermetic twin rotary |
| | Model | | | SVB172FPKM1T | SVB220FUGMC-L1 |
| | Motor output | | kW | 2.0 | 2.2 |
| | Start type | | | Inverter | Inverter |
| | Protection devices | | | HP switch<br>Theraml Protector<br>Comp. Surface thermo<br>Over current detection | HP switch<br>Theraml Protector<br>Comp. Surface thermo<br>Over current detection |
| | Oil | | L | 0.6 | 0.6 |
| Crankcase heater | | | | - | - |
| Heat exchanger | | Air | | Plate fin coil | Plate fin coil |
| | | Water | | Plate heat exchanger | Plate heat exchanger |
| Fan | Fan(drive) x No. | | | Propeller fan ×1 | Propeller fan ×1 |
| | Fan motor output | | kW | 0.064 | 0.088 |
| | Air flow | | $m^3$/min (CFM) | 42.7 (1508) | 62.0 (2182) |
| Defrost method | | | | Reverse cycle | Reverse cycle |
| Noise level (SPL) | ATW | Heating (Full Load) | dBA | 57 | 54 |
| | | Cooling | dBA | - | - |
| | ATA | Heating (Full Load) | dBA | 54 | 51 |
| | | Cooling | dBA | 48 | 49 |
| Noise level (PWL) | ATW | Heating | dBA | 67 | 64 |
| | ATA | Cooling | dBA | 63 | 61 |
| Dimensions | | Width | mm(in) | 840 (33-11/16) | 950 (37-3/8) |
| | | Depth | mm(in) | 330 (13) | 330 (13) |
| | | Height | mm(in) | 710 (27-15/16) | 796 (31-5/16) |
| Weight | | | kg(lbs) | 59 (130) | 62 (137) |
| Refrigerant | | | | R32 | R32 |
| | | Chargeless | kg(lbs) | 2.4 (5.3) | 2.4 (5.3) |
| | | MAX. | kg(lbs) | 2.4 (5.3) | 2.4 (5.3) |
| Pipe size O.D. | | Liquid | mm(in) | 6.35 (1/4) | 6.35 (1/4) |
| | | Gas | mm(in) | 12.7 (1/2) | 12.7 (1/2) |
| Connection method | | | | Flared | Flared |
| Between the indoor & outdoor unit | | Height difference | m | Max. 20 | Max. 20 |
| | | Piping length | m | Max. 60m total<br>Max. 30m for each | Max. 70m total<br>Max. 30m for each |
| Guaranteed operating range (Outdoor) | ATW | Heating | °C | -20 to +24 | -20 to +24 |
| | | DHW | °C | -20 to +35 | -20 to +35 |
| | | Cooling | °C | - | - |
| | ATA | Heating | °C | -20 to +24 | -20 to +24 |
| | | Cooling | °C | -10 to +46 | -10 to +46 |
| Outlet water temp. (Max in Heating, Min in Cooling) | | Heating | °C | +55 | +55 |
| | | Cooling | °C | - | - |
| Nominal return water temperature range *1 | | Heating | °C | +10 to +54 | +10 to +54 |
| | | Cooling | °C | - | - |
| Water Flow rate range | | | L/min | 11.5 to 21.7 | 11.5 to 24.6 |

*1 Due to the water quantity of system. See the graph of Section "1.4 Available range".

## 1.2 Capacity

### (1) Packaged-type units

| MODEL NAME | | | PUZ-WM50VHA(-BS) | PUZ-WM60VAA(-BS) | PUZ-WM85VAA(-BS) |
|---|---|---|---|---|---|
| Heating (A7/W35) | Capacity | kW | 5.00 | 6.00 | 8.50 |
| | COP | | 5.00 | 5.06 | 4.80 |
| | Power input | kW | 1.00 | 1.19 | 1.77 |
| | Flow rate | L/min | 14.3 | 17.2 | 24.4 |
| Heating (A2/W35) | Capacity | kW | 5.00 | 6.00 | 8.50 |
| | COP | | 3.70 | 3.75 | 3.51 |
| | Power input | kW | 1.35 | 1.60 | 2.42 |
| | Flow rate | L/min | 14.3 | 17.2 | 24.4 |
| Pressure difference (Water circuit) | | kPa | 12 | 8 | 15 |
| Heating pump input (Based on EN14511) | | kW | 0.010 | 0.008 | 0.020 |
| Cooling (A35/W7) | Capacity | kW | 4.50 | 6.00 | 7.50 |
| | EER (COP) | | 3.40 | 3.30 | 3.15 |
| | Power input | kW | 1.32 | 1.82 | 2.38 |
| | Flow rate | L/min | 12.9 | 17.2 | 21.5 |
| Cooling (A35/W18) | Capacity | kW | 4.50 | 6.00 | 7.50 |
| | EER (COP) | | 5.00 | 4.45 | 4.90 |
| | Power input | kW | 0.90 | 1.35 | 1.53 |
| | Flow rate | L/min | 12.9 | 17.2 | 21.5 |
| Pressure difference (Water circuit) | | kPa | 10 | 8 | 11 |
| Cooling pump input (Based on EN14511) | | kW | 0.010 | 0.008 | 0.014 |
| Recommended plate heat exchanger | | | Built-in | Built-in | Built-in |

Note: "COP" and "Power input" in the above table are values that contains the "pump input (Based on EN 14511) ".

| MODEL NAME | | | PUZ-WM85YAA(-BS) | PUZ-WM112VAA(-BS) | PUZ-WM112YAA(-BS) |
|---|---|---|---|---|---|
| Heating (A7/W35) | Capacity | kW | 8.50 | 11.20 | 11.20 |
| | COP | | 4.80 | 4.70 | 4.70 |
| | Power input | kW | 1.77 | 2.38 | 2.38 |
| | Flow rate | L/min | 24.4 | 32.1 | 32.1 |
| Heating (A2/W35) | Capacity | kW | 8.50 | 11.20 | 11.20 |
| | COP | | 3.51 | 3.44 | 3.44 |
| | Power input | kW | 2.42 | 3.26 | 3.26 |
| | Flow rate | L/min | 24.4 | 32.1 | 32.1 |
| Pressure difference (Water circuit) | | kPa | 15 | 24 | 24 |
| Heating pump input (Based on EN14511) | | kW | 0.020 | 0.043 | 0.043 |
| Cooling (A35/W7) | Capacity | kW | 7.50 | 10.00 | 10.00 |
| | EER (COP) | | 3.15 | 3.25 | 3.25 |
| | Power input | kW | 3.28 | 3.08 | 3.08 |
| | Flow rate | L/min | 21.5 | 28.7 | 28.7 |
| Cooling (A35/W18) | Capacity | kW | 7.50 | 10.00 | 10.00 |
| | EER (COP) | | 4.90 | 4.80 | 4.80 |
| | Power input | kW | 1.53 | 2.08 | 2.08 |
| | Flow rate | L/min | 21.5 | 28.7 | 28.7 |
| Pressure difference (Water circuit) | | kPa | 11 | 20 | 20 |
| Cooling pump input (Based on EN14511) | | kW | 0.014 | 0.032 | 0.032 |
| Recommended plate heat exchanger | | | Built-in | Built-in | Built-in |

Note: "COP" and "Power input" in the above table are values that contains the "pump input (Based on EN 14511) ".

| MODEL NAME | | | PUZ-HWM140VHA(-BS) | PUZ-HWM140YHA(-BS) |
|---|---|---|---|---|
| Heating (A7/W35) | Capacity | kW | 14.00 | 14.00 |
| | COP | | 4.46 | 4.46 |
| | Power input | kW | 3.14 | 3.14 |
| | Flow rate | L/min | 40.1 | 40.1 |
| Heating (A2/W35) | Capacity | kW | 14.00 | 14.00 |
| | COP | | 3.15 | 3.15 |
| | Power input | kW | 4.44 | 4.44 |
| | Flow rate | L/min | 40.1 | 40.1 |
| Pressure difference (Water circuit) | | kPa | 9 | 9 |
| Heating pump input (Based on EN14511) | | kW | 0.020 | 0.020 |
| Cooling (A35/W7) | Capacity | kW | 11.90 | 11.90 |
| | EER (COP) | | 3.00 | 3.00 |
| | Power input | kW | 3.97 | 3.97 |
| | Flow rate | L/min | 34.1 | 34.1 |
| Cooling (A35/W18) | Capacity | kW | 11.10 | 11.10 |
| | EER (COP) | | 4.10 | 4.10 |
| | Power input | kW | 2.71 | 2.71 |
| | Flow rate | L/min | 26.8 | 26.8 |
| Pressure difference (Water circuit) | | kPa | 7 | 7 |
| Cooling pump input (Based on EN14511) | | kW | 0.020 | 0.020 |
| Recommended plate heat exchanger | | | Built-in | Built-in |

Note: "COP" and "Power input" in the above table are values that contains the "pump input (Based on EN 14511) ".

### (2) Split-type units

| MODEL NAME | | | SUZ-SWM40VA | SUZ-SWM60VA | SUZ-SWM80VA |
|---|---|---|---|---|---|
| Heating (A7/W35) | Capacity | kW | 4.00 | 7.50 | 7.50 |
| | COP | | 5.20 | 4.70 | 4.70 |
| | Power input | kW | 0.77 | 1.60 | 1.60 |
| | Flow rate | L/min | 11.5 | 21.5 | 21.5 |
| Heating (A2/W35) | Capacity | kW | 4.00 | 6.50 | 6.50 |
| | COP | | 3.90 | 3.40 | 3.40 |
| | Power input | kW | 1.03 | 1.91 | 1.91 |
| | Flow rate | L/min | 11.5 | 18.6 | 18.6 |
| Pressure difference (Water circuit) | | kPa | - | - | - |
| Heating pump input (Based on EN14511) | | kW | - | - | - |
| Cooling (A35/W7) | Capacity | kW | 4.50 | 5.40 | 5.40 |
| | EER (COP) | | 3.29 | 3.00 | 3.00 |
| | Power input | kW | 1.37 | 1.80 | 1.80 |
| | Flow rate | L/min | 12.9 | 15.5 | 15.5 |
| Cooling (A35/W18) | Capacity | kW | 5.60 | 6.30 | 6.30 |
| | EER (COP) | | 4.97 | 4.80 | 4.80 |
| | Power input | kW | 1.13 | 1.31 | 1.31 |
| | Flow rate | L/min | 16.1 | 18.1 | 18.1 |
| Pressure difference (Water circuit) | | kPa | - | - | - |
| Cooling pump input (Based on EN14511) | | kW | - | - | - |
| Recommended plate heat exchanger | | | MWA1-44DM | MWA1-44DM | MWA1-44DM |

The table shows performance data obtained when a plate heat exchanger is connected.

| MODEL NAME | | | SUZ-SWM30VA | SUZ-SHWM30VAH | SUZ-SWM40VA2(-SC) |
|---|---|---|---|---|---|
| Heating (A7/W35) | Capacity | kW | 3.00 | 3.00 | 3.00 |
| | COP | | 5.11 | 5.11 | 5.11 |
| | Power input | kW | 0.59 | 0.59 | 0.59 |
| | Flow rate | L/min | 8.6 | 8.6 | 8.6 |
| Heating (A2/W35) | Capacity | kW | 3.00 | 3.00 | 4.00 |
| | COP | | 3.96 | 3.67 | 3.90 |
| | Power input | kW | 0.76 | 0.82 | 1.03 |
| | Flow rate | L/min | 8.6 | 8.6 | 11.5 |
| Pressure difference (Water circuit) | | kPa | - | - | - |
| Heating pump input (Based on EN14511) | | kW | - | - | - |
| Cooling (A35/W7) | Capacity | kW | 3.50 | 3.50 | 4.50 |
| | EER (COP) | | 3.52 | 3.52 | 3.31 |
| | Power input | kW | 0.99 | 0.99 | 1.36 |
| | Flow rate | L/min | 10.0 | 10.0 | 12.9 |
| Cooling (A35/W18) | Capacity | kW | 3.50 | 3.50 | 5.60 |
| | EER (COP) | | 5.51 | 5.51 | 4.71 |
| | Power input | kW | 0.64 | 0.64 | 1.19 |
| | Flow rate | L/min | 10.0 | 10.0 | 16.1 |
| Pressure difference (Water circuit) | | kPa | - | - | - |
| Cooling pump input (Based on EN14511) | | kW | - | - | - |
| Recommended plate heat exchanger | | | MWA1-44DM | MWA1-44DM | MWA1-44DM |

The table shows performance data obtained when a plate heat exchanger is connected.

| MODEL NAME | | | SUZ-SHWM40VAH(-SC) | SUZ-SWM60VA2(-SC) | SUZ-SHWM60VAH(-SC) |
|---|---|---|---|---|---|
| Heating (A7/W35) | Capacity | kW | 3.00 | 5.00 | 5.00 |
| | COP | | 4.77 | 4.85 | 4.95 |
| | Power input | kW | 0.63 | 1.03 | 1.01 |
| | Flow rate | L/min | 8.6 | 14.3 | 14.3 |
| Heating (A2/W35) | Capacity | kW | 4.00 | 6.00 | 6.00 |
| | COP | | 3.61 | 3.62 | 3.47 |
| | Power input | kW | 1.11 | 1.66 | 1.73 |
| | Flow rate | L/min | 11.5 | 17.2 | 17.2 |
| Pressure difference (Water circuit) | | kPa | - | - | - |
| Heating pump input (Based on EN14511) | | kW | - | - | - |
| Cooling (A35/W7) | Capacity | kW | 4.50 | 5.00 | 6.00 |
| | EER (COP) | | 3.33 | 3.18 | 3.28 |
| | Power input | kW | 1.35 | 1.57 | 1.83 |
| | Flow rate | L/min | 12.9 | 14.3 | 17.2 |
| Cooling (A35/W18) | Capacity | kW | 5.60 | 6.00 | 6.00 |
| | EER (COP) | | 4.70 | 4.65 | 5.21 |
| | Power input | kW | 1.19 | 1.29 | 1.15 |
| | Flow rate | L/min | 16.1 | 17.2 | 17.2 |
| Pressure difference (Water circuit) | | kPa | - | - | - |
| Cooling pump input (Based on EN14511) | | kW | - | - | - |
| Recommended plate heat exchanger | | | MWA1-44DM | MWA1-44DM | MWA1-44DM |

The table shows performance data obtained when a plate heat exchanger is connected.

| MODEL NAME | | | SUZ-SWM80VA2 | SUZ-SWM80VAH2 | SUZ-SWM100VA |
|---|---|---|---|---|---|
| Heating (A7/W35) | Capacity | kW | 6.00 | 6.00 | 7.50 |
| | COP | | 5.10 | 5.10 | 4.85 |
| | Power input | kW | 1.18 | 1.18 | 1.55 |
| | Flow rate | L/min | 17.2 | 17.2 | 21.5 |
| Heating (A2/W35) | Capacity | kW | 7.50 | 7.50 | 9.00 |
| | COP | | 3.50 | 3.31 | 3.12 |
| | Power input | kW | 2.14 | 2.27 | 2.88 |
| | Flow rate | L/min | 21.5 | 21.5 | 25.8 |
| Pressure difference (Water circuit) | | kPa | - | - | - |
| Heating pump input (Based on EN14511) | | kW | - | - | - |
| Cooling (A35/W7) | Capacity | kW | 6.70 | 6.70 | 7.30 |
| | EER (COP) | | 3.20 | 3.20 | 3.00 |
| | Power input | kW | 2.09 | 2.09 | 2.43 |
| | Flow rate | L/min | 19.2 | 19.2 | 20.9 |
| Cooling (A35/W18) | Capacity | kW | 6.70 | 6.70 | 8.10 |
| | EER (COP) | | 5.06 | 5.06 | 4.44 |
| | Power input | kW | 1.32 | 1.32 | 1.82 |
| | Flow rate | L/min | 19.2 | 19.2 | 23.2 |
| Pressure difference (Water circuit) | | kPa | - | - | - |
| Cooling pump input (Based on EN14511) | | kW | - | - | - |
| Recommended plate heat exchanger | | | MWA1-44DM | MWA1-44DM | MWA1-44DM |

The table shows performance data obtained when a plate heat exchanger is connected.

| MODEL NAME | | | SUZ-SWM100VAH |
|---|---|---|---|
| Heating (A7/W35) | Capacity | kW | 7.50 |
| | COP | | 4.85 |
| | Power input | kW | 1.55 |
| | Flow rate | L/min | 21.5 |
| Heating (A2/W35) | Capacity | kW | 9.00 |
| | COP | | 3.00 |
| | Power input | kW | 3.00 |
| | Flow rate | L/min | 25.8 |
| Pressure difference (Water circuit) | | kPa | - |
| Heating pump input (Based on EN14511) | | kW | - |
| Cooling (A35/W7) | Capacity | kW | 7.30 |
| | EER (COP) | | 3.00 |
| | Power input | kW | 2.43 |
| | Flow rate | L/min | 20.9 |
| Cooling (A35/W18) | Capacity | kW | 8.10 |
| | EER (COP) | | 4.44 |
| | Power input | kW | 1.82 |
| | Flow rate | L/min | 23.2 |
| Pressure difference (Water circuit) | | kPa | - |
| Cooling pump input (Based on EN14511) | | kW | - |
| Recommended plate heat exchanger | | | MWA1-44DM |

The table shows performance data obtained when a plate heat exchanger is connected.

| MODEL NAME | | | PUZ-SWM60VAA | PUZ-SWM80VAA | PUZ-SWM80YAA |
|---|---|---|---|---|---|
| Heating (A7/W35) | Capacity | kW | 5.00 | 6.00 | 6.00 |
| | COP | | 5.00 | 5.00 | 5.00 |
| | Power input | kW | 1.00 | 1.20 | 1.20 |
| | Flow rate | L/min | 14.3 | 17.2 | 17.2 |
| Heating (A2/W35) | Capacity | kW | 6.00 | 8.00 | 8.00 |
| | COP | | 3.70 | 3.65 | 3.65 |
| | Power input | kW | 1.62 | 2.19 | 2.19 |
| | Flow rate | L/min | 17.2 | 22.9 | 22.9 |
| Pressure difference (Water circuit) | | kPa | - | - | - |
| Heating pump input (Based on EN14511) | | kW | - | - | - |
| Cooling (A35/W7) | Capacity | kW | 5.10 | 7.10 | 7.10 |
| | EER (COP) | | 3.40 | 3.20 | 3.20 |
| | Power input | kW | 1.50 | 2.22 | 2.22 |
| | Flow rate | L/min | 14.6 | 20.4 | 20.4 |
| Cooling (A35/W18) | Capacity | kW | 6.00 | 8.00 | 8.00 |
| | EER (COP) | | 5.25 | 4.90 | 4.90 |
| | Power input | kW | 1.14 | 1.63 | 1.63 |
| | Flow rate | L/min | 17.2 | 22.9 | 22.9 |
| Pressure difference (Water circuit) | | kPa | - | - | - |
| Cooling pump input (Based on EN14511) | | kW | - | - | - |
| Recommended plate heat exchanger | | | MWA1-44DM | MWA1-44DM | MWA1-44DM |

The table shows performance data obtained when a plate heat exchanger is connected.

| MODEL NAME | | | PUZ-SWM100VAA | PUZ-SWM100YAA | PUZ-SWM120VAA |
|---|---|---|---|---|---|
| Heating (A7/W35) | Capacity | kW | 8.00 | 8.00 | 10.00 |
| | COP | | 5.00 | 5.00 | 4.85 |
| | Power input | kW | 1.60 | 1.60 | 2.06 |
| | Flow rate | L/min | 22.9 | 22.9 | 28.7 |
| Heating (A2/W35) | Capacity | kW | 10.00 | 10.00 | 12.10 |
| | COP | | 3.45 | 3.45 | 3.25 |
| | Power input | kW | 2.90 | 2.90 | 3.72 |
| | Flow rate | L/min | 28.7 | 28.7 | 34.7 |
| Pressure difference (Water circuit) | | kPa | - | - | - |
| Heating pump input (Based on EN14511) | | kW | - | - | - |
| Cooling (A35/W7) | Capacity | kW | 9.00 | 9.00 | 11.00 |
| | EER (COP) | | 2.95 | 2.95 | 2.85 |
| | Power input | kW | 3.05 | 3.05 | 3.86 |
| | Flow rate | L/min | 25.8 | 25.8 | 31.5 |
| Cooling (A35/W18) | Capacity | kW | 10.00 | 10.00 | 12.00 |
| | EER (COP) | | 4.55 | 4.55 | 4.30 |
| | Power input | kW | 2.20 | 2.20 | 2.79 |
| | Flow rate | L/min | 28.7 | 28.7 | 34.4 |
| Pressure difference (Water circuit) | | kPa | - | - | - |
| Cooling pump input (Based on EN14511) | | kW | - | - | - |
| Recommended plate heat exchanger | | | MWA1-44DM | MWA1-44DM | MWA1-44DM |

The table shows performance data obtained when a plate heat exchanger is connected.

| MODEL NAME | | | PUZ-SWM120YAA | PUZ-SWM140VAA | PUZ-SWM140YAA |
|---|---|---|---|---|---|
| Heating (A7/W35) | Capacity | kW | 10.00 | 12.00 | 12.00 |
| | COP | | 4.85 | 4.75 | 4.75 |
| | Power input | kW | 2.06 | 2.53 | 2.53 |
| | Flow rate | L/min | 28.7 | 34.4 | 34.4 |
| Heating (A2/W35) | Capacity | kW | 12.10 | 14.00 | 14.00 |
| | COP | | 3.25 | 3.15 | 3.15 |
| | Power input | kW | 3.72 | 4.44 | 4.44 |
| | Flow rate | L/min | 34.7 | 40.1 | 40.1 |
| Pressure difference (Water circuit) | | kPa | - | - | - |
| Heating pump input (Based on EN14511) | | kW | - | - | - |
| Cooling (A35/W7) | Capacity | kW | 11.00 | 12.50 | 12.50 |
| | EER (COP) | | 2.85 | 2.60 | 2.60 |
| | Power input | kW | 3.86 | 4.81 | 4.81 |
| | Flow rate | L/min | 31.5 | 35.8 | 35.8 |
| Cooling (A35/W18) | Capacity | kW | 12.00 | 14.00 | 14.00 |
| | EER (COP) | | 4.30 | 3.62 | 3.62 |
| | Power input | kW | 2.79 | 3.87 | 3.87 |
| | Flow rate | L/min | 34.4 | 40.1 | 40.1 |
| Pressure difference (Water circuit) | | kPa | - | - | - |
| Cooling pump input (Based on EN14511) | | kW | - | - | - |
| Recommended plate heat exchanger | | | MWA1-44DM | MWA1-44DM | MWA1-44DM |

The table shows performance data obtained when a plate heat exchanger is connected.

| MODEL NAME | | | PUZ-SHWM60VAA | PUZ-SHWM80VAA | PUZ-SHWM80YAA |
|---|---|---|---|---|---|
| Heating (A7/W35) | Capacity | kW | 5.00 | 6.00 | 6.00 |
| | COP | | 5.05 | 5.05 | 5.05 |
| | Power input | kW | 0.99 | 1.19 | 1.19 |
| | Flow rate | L/min | 14.3 | 17.2 | 17.2 |
| Heating (A2/W35) | Capacity | kW | 6.00 | 8.00 | 8.00 |
| | COP | | 3.80 | 3.75 | 3.75 |
| | Power input | kW | 1.58 | 2.13 | 2.13 |
| | Flow rate | L/min | 17.2 | 22.9 | 22.9 |
| Pressure difference (Water circuit) | | kPa | - | - | - |
| Heating pump input (Based on EN14511) | | kW | - | - | - |
| Cooling (A35/W7) | Capacity | kW | 5.10 | 7.10 | 7.10 |
| | EER (COP) | | 3.40 | 3.20 | 3.20 |
| | Power input | kW | 1.50 | 2.22 | 2.22 |
| | Flow rate | L/min | 14.6 | 20.4 | 20.4 |
| Cooling (A35/W18) | Capacity | kW | 6.00 | 8.00 | 8.00 |
| | EER (COP) | | 5.25 | 4.90 | 4.90 |
| | Power input | kW | 1.14 | 1.63 | 1.63 |
| | Flow rate | L/min | 17.2 | 22.9 | 22.9 |
| Pressure difference (Water circuit) | | kPa | - | - | - |
| Cooling pump input (Based on EN14511) | | kW | - | - | - |
| Recommended plate heat exchanger | | | MWA1-44DM | MWA1-44DM | MWA1-44DM |

The table shows performance data obtained when a plate heat exchanger is connected.

| MODEL NAME | | | PUZ-SHWM100VAA | PUZ-SHWM100YAA | PUZ-SHWM120VAA |
|---|---|---|---|---|---|
| Heating (A7/W35) | Capacity | kW | 8.00 | 8.00 | 10.00 |
| | COP | | 5.00 | 5.00 | 4.85 |
| | Power input | kW | 1.60 | 1.60 | 2.06 |
| | Flow rate | L/min | 22.9 | 22.9 | 28.7 |
| Heating (A2/W35) | Capacity | kW | 10.00 | 10.00 | 12.10 |
| | COP | | 3.50 | 3.50 | 3.30 |
| | Power input | kW | 2.86 | 2.86 | 3.67 |
| | Flow rate | L/min | 28.7 | 28.7 | 34.7 |
| Pressure difference (Water circuit) | | kPa | - | - | - |
| Heating pump input (Based on EN14511) | | kW | - | - | - |
| Cooling (A35/W7) | Capacity | kW | 9.00 | 9.00 | 11.00 |
| | EER (COP) | | 2.95 | 2.95 | 2.85 |
| | Power input | kW | 3.05 | 3.05 | 3.86 |
| | Flow rate | L/min | 25.8 | 25.8 | 31.5 |
| Cooling (A35/W18) | Capacity | kW | 10.00 | 10.00 | 12.00 |
| | EER (COP) | | 4.55 | 4.55 | 4.30 |
| | Power input | kW | 2.20 | 2.20 | 2.79 |
| | Flow rate | L/min | 28.7 | 28.7 | 34.4 |
| Pressure difference (Water circuit) | | kPa | - | - | - |
| Cooling pump input (Based on EN14511) | | kW | - | - | - |
| Recommended plate heat exchanger | | | MWA1-44DM | MWA1-44DM | MWA1-44DM |

The table shows performance data obtained when a plate heat exchanger is connected.

| MODEL NAME | | | PUZ-SHWM120YAA | PUZ-SHWM140VAA | PUZ-SHWM140YAA |
|---|---|---|---|---|---|
| Heating (A7/W35) | Capacity | kW | 10.00 | 12.00 | 12.00 |
| | COP | | 4.85 | 4.80 | 4.80 |
| | Power input | kW | 2.06 | 2.50 | 2.50 |
| | Flow rate | L/min | 28.7 | 34.4 | 34.4 |
| Heating (A2/W35) | Capacity | kW | 12.10 | 14.00 | 14.00 |
| | COP | | 3.30 | 3.24 | 3.24 |
| | Power input | kW | 3.67 | 4.32 | 4.32 |
| | Flow rate | L/min | 34.7 | 40.1 | 40.1 |
| Pressure difference (Water circuit) | | kPa | - | - | - |
| Heating pump input (Based on EN14511) | | kW | - | - | - |
| Cooling (A35/W7) | Capacity | kW | 11.00 | 12.50 | 12.50 |
| | EER (COP) | | 2.85 | 2.60 | 2.60 |
| | Power input | kW | 3.86 | 4.81 | 4.81 |
| | Flow rate | L/min | 31.5 | 35.8 | 35.8 |
| Cooling (A35/W18) | Capacity | kW | 12.00 | 14.00 | 14.00 |
| | EER (COP) | | 4.30 | 3.62 | 3.62 |
| | Power input | kW | 2.79 | 3.87 | 3.87 |
| | Flow rate | L/min | 34.4 | 40.1 | 40.1 |
| Pressure difference (Water circuit) | | kPa | - | - | - |
| Cooling pump input (Based on EN14511) | | kW | - | - | - |
| Recommended plate heat exchanger | | | MWA1-44DM | MWA1-44DM | MWA1-44DM |

The table shows performance data obtained when a plate heat exchanger is connected.

| MODEL NAME | | | PUD-SWM60VAA(-BS) | PUD-SHWM60VAA(-BS) |
|---|---|---|---|---|
| Heating (A7/W35) | Capacity | kW | 5.00 | 5.00 |
| | COP | | 4.76 | 4.99 |
| | Power input | kW | 1.05 | 1.00 |
| | Flow rate | L/min | 14.3 | 14.3 |
| Heating (A2/W35) | Capacity | kW | 6.00 | 6.00 |
| | COP | | 3.60 | 3.80 |
| | Power input | kW | 1.67 | 1.58 |
| | Flow rate | L/min | 17.2 | 17.2 |
| Pressure difference (Water circuit) | | kPa | - | - |
| Heating pump input (Based on EN14511) | | kW | - | - |
| Cooling (A35/W7) | Capacity | kW | - | - |
| | EER (COP) | | - | - |
| | Power input | kW | - | - |
| | Flow rate | L/min | - | - |
| Cooling (A35/W18) | Capacity | kW | - | - |
| | EER (COP) | | - | - |
| | Power input | kW | - | - |
| | Flow rate | L/min | - | - |
| Pressure difference (Water circuit) | | kPa | - | - |
| Cooling pump input (Based on EN14511) | | kW | - | - |
| Recommended plate heat exchanger | | | MWA1-44DM | MWA1-44DM |

The table shows performance data obtained when a plate heat exchanger is connected.

| MODEL NAME | | | PUD-SWM80VAA(-BS) | PUD-SWM80YAA(-BS) |
|---|---|---|---|---|
| Heating (A7/W35) | Capacity | kW | 6.00 | 6.00 |
| | COP | | 4.76 | 4.76 |
| | Power input | kW | 1.26 | 1.26 |
| | Flow rate | L/min | 17.2 | 17.2 |
| Heating (A2/W35) | Capacity | kW | 8.00 | 8.00 |
| | COP | | 3.55 | 3.55 |
| | Power input | kW | 2.25 | 2.25 |
| | Flow rate | L/min | 22.9 | 22.9 |
| Pressure difference (Water circuit) | | kPa | - | - |
| Heating pump input (Based on EN14511) | | kW | - | - |
| Cooling (A35/W7) | Capacity | kW | - | - |
| | EER (COP) | | - | - |
| | Power input | kW | - | - |
| | Flow rate | L/min | - | - |
| Cooling (A35/W18) | Capacity | kW | - | - |
| | EER (COP) | | - | - |
| | Power input | kW | - | - |
| | Flow rate | L/min | - | - |
| Pressure difference (Water circuit) | | kPa | - | - |
| Cooling pump input (Based on EN14511) | | kW | - | - |
| Recommended plate heat exchanger | | | MWA1-44DM | MWA1-44DM |

The table shows performance data obtained when a plate heat exchanger is connected.

| MODEL NAME | | | PUD-SHWM80VAA(-BS) | PUD-SHWM80YAA(-BS) |
|---|---|---|---|---|
| Heating (A7/W35) | Capacity | kW | 6.00 | 6.00 |
| | COP | | 5.03 | 5.03 |
| | Power input | kW | 1.19 | 1.19 |
| | Flow rate | L/min | 17.2 | 17.2 |
| Heating (A2/W35) | Capacity | kW | 8.00 | 8.00 |
| | COP | | 3.75 | 3.75 |
| | Power input | kW | 2.13 | 2.13 |
| | Flow rate | L/min | 22.9 | 22.9 |
| Pressure difference (Water circuit) | | kPa | - | - |
| Heating pump input (Based on EN14511) | | kW | - | - |
| Cooling (A35/W7) | Capacity | kW | - | - |
| | EER (COP) | | - | - |
| | Power input | kW | - | - |
| | Flow rate | L/min | - | - |
| Cooling (A35/W18) | Capacity | kW | - | - |
| | EER (COP) | | - | - |
| | Power input | kW | - | - |
| | Flow rate | L/min | - | - |
| Pressure difference (Water circuit) | | kPa | - | - |
| Cooling pump input (Based on EN14511) | | kW | - | - |
| Recommended plate heat exchanger | | | MWA1-44DM | MWA1-44DM |

The table shows performance data obtained when a plate heat exchanger is connected.

| MODEL NAME | | | PUD-SWM100VAA(-BS) | PUD-SWM100YAA(-BS) |
|---|---|---|---|---|
| Heating (A7/W35) | Capacity | kW | 8.00 | 8.00 |
| | COP | | 5.00 | 5.00 |
| | Power input | kW | 1.60 | 1.60 |
| | Flow rate | L/min | 22.9 | 22.9 |
| Heating (A2/W35) | Capacity | kW | 10.00 | 10.00 |
| | COP | | 3.30 | 3.30 |
| | Power input | kW | 3.03 | 3.03 |
| | Flow rate | L/min | 28.7 | 28.7 |
| Pressure difference (Water circuit) | | kPa | - | - |
| Heating pump input (Based on EN14511) | | kW | - | - |
| Cooling (A35/W7) | Capacity | kW | - | - |
| | EER (COP) | | - | - |
| | Power input | kW | - | - |
| | Flow rate | L/min | - | - |
| Cooling (A35/W18) | Capacity | kW | - | - |
| | EER (COP) | | - | - |
| | Power input | kW | - | - |
| | Flow rate | L/min | - | - |
| Pressure difference (Water circuit) | | kPa | - | - |
| Cooling pump input (Based on EN14511) | | kW | - | - |
| Recommended plate heat exchanger | | | MWA1-44DM | MWA1-44DM |

The table shows performance data obtained when a plate heat exchanger is connected.

| MODEL NAME | | | PUD-SHWM100VAA(-BS) | PUD-SHWM100YAA(-BS) |
|---|---|---|---|---|
| Heating (A7/W35) | Capacity | kW | 8.00 | 8.00 |
| | COP | | 5.00 | 5.00 |
| | Power input | kW | 1.60 | 1.60 |
| | Flow rate | L/min | 22.9 | 22.9 |
| Heating (A2/W35) | Capacity | kW | 10.00 | 10.00 |
| | COP | | 3.45 | 3.45 |
| | Power input | kW | 2.90 | 2.90 |
| | Flow rate | L/min | 28.7 | 28.7 |
| Pressure difference (Water circuit) | | kPa | - | - |
| Heating pump input (Based on EN14511) | | kW | - | - |
| Cooling (A35/W7) | Capacity | kW | - | - |
| | EER (COP) | | - | - |
| | Power input | kW | - | - |
| | Flow rate | L/min | - | - |
| Cooling (A35/W18) | Capacity | kW | - | - |
| | EER (COP) | | - | - |
| | Power input | kW | - | - |
| | Flow rate | L/min | - | - |
| Pressure difference (Water circuit) | | kPa | - | - |
| Cooling pump input (Based on EN14511) | | kW | - | - |
| Recommended plate heat exchanger | | | MWA1-44DM | MWA1-44DM |

The table shows performance data obtained when a plate heat exchanger is connected.

| MODEL NAME | | | PUD-SWM120VAA(-BS) | PUD-SWM120YAA(-BS) |
|---|---|---|---|---|
| Heating (A7/W35) | Capacity | kW | 10.00 | 10.00 |
| | COP | | 4.70 | 4.70 |
| | Power input | kW | 2.13 | 2.13 |
| | Flow rate | L/min | 28.7 | 28.7 |
| Heating (A2/W35) | Capacity | kW | 12.00 | 12.00 |
| | COP | | 3.24 | 3.24 |
| | Power input | kW | 3.70 | 3.70 |
| | Flow rate | L/min | 34.4 | 34.4 |
| Pressure difference (Water circuit) | | kPa | - | - |
| Heating pump input (Based on EN14511) | | kW | - | - |
| Cooling (A35/W7) | Capacity | kW | - | - |
| | EER (COP) | | - | - |
| | Power input | kW | - | - |
| | Flow rate | L/min | - | - |
| Cooling (A35/W18) | Capacity | kW | - | - |
| | EER (COP) | | - | - |
| | Power input | kW | - | - |
| | Flow rate | L/min | - | - |
| Pressure difference (Water circuit) | | kPa | - | - |
| Cooling pump input (Based on EN14511) | | kW | - | - |
| Recommended plate heat exchanger | | | MWA1-44DM | MWA1-44DM |

The table shows performance data obtained when a plate heat exchanger is connected.

| MODEL NAME | | | PUD-SHWM120VAA(-BS) | PUD-SHWM120YAA(-BS) |
|---|---|---|---|---|
| Heating (A7/W35) | Capacity | kW | 10.00 | 10.00 |
| | COP | | 4.80 | 4.80 |
| | Power input | kW | 2.08 | 2.08 |
| | Flow rate | L/min | 28.7 | 28.7 |
| Heating (A2/W35) | Capacity | kW | 12.00 | 12.00 |
| | COP | | 3.30 | 3.30 |
| | Power input | kW | 3.64 | 3.64 |
| | Flow rate | L/min | 34.4 | 34.4 |
| Pressure difference (Water circuit) | | kPa | - | - |
| Heating pump input (Based on EN14511) | | kW | - | - |
| Cooling (A35/W7) | Capacity | kW | - | - |
| | EER (COP) | | - | - |
| | Power input | kW | - | - |
| | Flow rate | L/min | - | - |
| Cooling (A35/W18) | Capacity | kW | - | - |
| | EER (COP) | | - | - |
| | Power input | kW | - | - |
| | Flow rate | L/min | - | - |
| Pressure difference (Water circuit) | | kPa | - | - |
| Cooling pump input (Based on EN14511) | | kW | - | - |
| Recommended plate heat exchanger | | | MWA1-44DM | MWA1-44DM |

The table shows performance data obtained when a plate heat exchanger is connected.

| MODEL NAME | | | PUD-SHWM140VAA(-BS) | PUD-SHWM140YAA(-BS) |
|---|---|---|---|---|
| Heating (A7/W35) | Capacity | kW | 12.00 | 12.00 |
| | COP | | 4.70 | 4.70 |
| | Power input | kW | 2.55 | 2.55 |
| | Flow rate | L/min | 34.4 | 34.4 |
| Heating (A2/W35) | Capacity | kW | 14.00 | 14.00 |
| | COP | | 3.05 | 3.05 |
| | Power input | kW | 4.59 | 4.59 |
| | Flow rate | L/min | 40.1 | 40.1 |
| Pressure difference (Water circuit) | | kPa | - | - |
| Heating pump input (Based on EN14511) | | kW | - | - |
| Cooling (A35/W7) | Capacity | kW | - | - |
| | EER (COP) | | - | - |
| | Power input | kW | - | - |
| | Flow rate | L/min | - | - |
| Cooling (A35/W18) | Capacity | kW | - | - |
| | EER (COP) | | - | - |
| | Power input | kW | - | - |
| | Flow rate | L/min | - | - |
| Pressure difference (Water circuit) | | kPa | - | - |
| Cooling pump input (Based on EN14511) | | kW | - | - |
| Recommended plate heat exchanger | | | MWA1-44DM | MWA1-44DM |

The table shows performance data obtained when a plate heat exchanger is connected.

| MODEL NAME | | | PXZ-4F75VG | PXZ-5F85VG |
|---|---|---|---|---|
| Heating (A7/W35) | Capacity | kW | 7.5 | 8.5 |
| | COP | | 4.17 | 4.34 |
| | Power input | kW | 1.80 | 1.96 |
| | Flow rate | L/min | 21.5 | 24.4 |
| Heating (A2/W35) | Capacity | kW | 6.8 | 7.8 |
| | COP | | 2.80 | 3.00 |
| | Power input | kW | 2.43 | 2.60 |
| | Flow rate | L/min | 19.5 | 22.4 |
| Pressure difference (Water circuit) | | kPa | - | - |
| Heating pump input (Based on EN14511) | | kW | - | - |
| Cooling (A35/W7) | Capacity | kW | - | - |
| | EER (COP) | | - | - |
| | Power input | kW | - | - |
| | Flow rate | L/min | - | - |
| Cooling (A35/W18) | Capacity | kW | - | - |
| | EER (COP) | | - | - |
| | Power input | kW | - | - |
| | Flow rate | L/min | - | - |
| Pressure difference (Water circuit) | | kPa | - | - |
| Cooling pump input (Based on EN14511) | | kW | - | - |
| Recommended plate heat exchanger | | | MWA1-44DM | MWA1-44DM |

The table shows performance data obtained when a plate heat exchanger is connected.

* In case of ATW unit single connection, the COP for ATW heating decreases depending on the number of connected ATA units. (Refer to the figure below.)

**ATW COP reduction ratio by ATA indoor units**

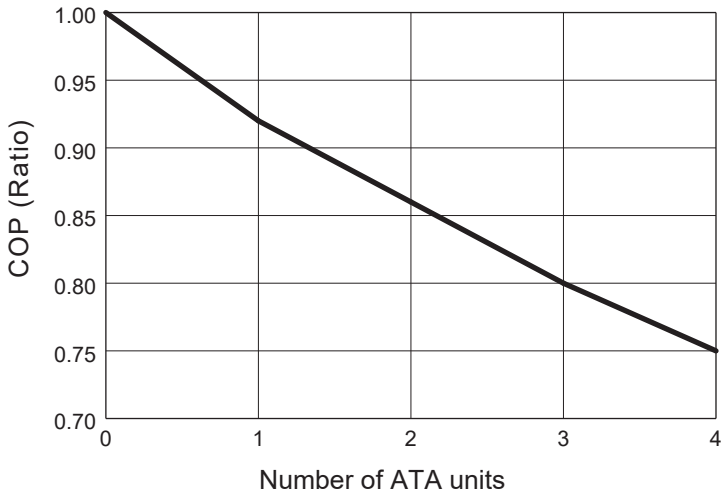


| Number of ATA units | 0 | 1 | 2 | 3 | 4 |
|---|---|---|---|---|---|
| COP (Ratio) | 1.00 | 0.92 | 0.86 | 0.80 | 0.75 |

| Outdoor unit | Indoor unit | For medium-temperature application | | | | | | | For low-temperature application | | | | | | |
|---|---|---|---|---|---|---|---|---|---|---|---|---|---|---|---|
| | | Seasonal space heating energy efficiency class | Water heating energy efficiency class | Rated heat output under average climate conditions | Seasonal space heating energy efficiency under average climate conditions | Water heating energy efficiency under average climate conditions | Sound power level LWA indoor | Sound power level LWA outdoor | Seasonal space heating energy efficiency class | Water heating energy efficiency class | Rated heat output under average climate conditions | Seasonal space heating energy efficiency under average climate conditions | Water heating energy efficiency under average climate conditions | Sound power level LWA indoor | Sound power level LWA outdoor |
| | | | | kW | % | % | dBA | dBA | | | kW | % | % | dBA | dBA |
| SUZ-SWM40VA | EHST17D-***D | A++ | A+ | 4.6 | 129 | 148 | 41 | 58 | A+++ | A+ | 5.1 | 180 | 148 | 41 | 58 |
| | ERST17D-***D | A++ | A+ | 4.6 | 132 | 148 | 41 | 58 | A+++ | A+ | 5.1 | 187 | 148 | 41 | 58 |
| | EHST20D-***D | A++ | A+ | 4.6 | 129 | 159 | 41 | 58 | A+++ | A+ | 5.1 | 180 | 159 | 41 | 58 |
| | ERST20D-***D | A++ | A+ | 4.6 | 132 | 159 | 41 | 58 | A+++ | A+ | 5.1 | 187 | 159 | 41 | 58 |
| | EHST30D-***D | A++ | A+ | 4.6 | 129 | 128 | 41 | 58 | A+++ | A+ | 5.1 | 180 | 128 | 41 | 58 |
| | ERST30D-***D | A++ | A+ | 4.6 | 132 | 128 | 41 | 58 | A+++ | A+ | 5.1 | 187 | 128 | 41 | 58 |
| | EHSD-***D | A++ | - | 4.6 | 129 | - | 41 | 58 | A+++ | - | 5.1 | 180 | - | 41 | 58 |
| | ERSD-***D | A++ | - | 4.6 | 132 | - | 41 | 58 | A+++ | - | 5.1 | 187 | - | 41 | 58 |
| SUZ-SWM60VA | EHST17D-***D | A++ | A+ | 6.0 | 130 | 144 | 41 | 60 | A+++ | A+ | 6.6 | 181 | 144 | 41 | 60 |
| | ERST17D-***D | A++ | A+ | 6.0 | 133 | 144 | 41 | 60 | A+++ | A+ | 6.6 | 187 | 144 | 41 | 60 |
| | EHST20D-***D | A++ | A+ | 6.0 | 130 | 148 | 41 | 60 | A+++ | A+ | 6.6 | 181 | 148 | 41 | 60 |
| | ERST20D-***D | A++ | A+ | 6.0 | 133 | 148 | 41 | 60 | A+++ | A+ | 6.6 | 187 | 148 | 41 | 60 |
| | EHST30D-***D | A++ | A+ | 6.0 | 130 | 128 | 41 | 60 | A+++ | A+ | 6.6 | 181 | 128 | 41 | 60 |
| | ERST30D-***D | A++ | A+ | 6.0 | 133 | 128 | 41 | 60 | A+++ | A+ | 6.6 | 187 | 128 | 41 | 60 |
| | EHSD-***D | A++ | - | 6.0 | 130 | - | 41 | 60 | A+++ | - | 6.6 | 181 | - | 41 | 60 |
| | ERSD-***D | A++ | - | 6.0 | 133 | - | 41 | 60 | A+++ | - | 6.6 | 187 | - | 41 | 60 |
| SUZ-SWM80VA | EHST17D-***D | A++ | A+ | 7.1 | 131 | 144 | 41 | 62 | A+++ | A+ | 7.1 | 182 | 144 | 41 | 62 |
| | ERST17D-***D | A++ | A+ | 7.1 | 133 | 144 | 41 | 62 | A+++ | A+ | 7.1 | 187 | 144 | 41 | 62 |
| | EHST20D-***D | A++ | A+ | 7.1 | 131 | 148 | 41 | 62 | A+++ | A+ | 7.1 | 182 | 148 | 41 | 62 |
| | ERST20D-***D | A++ | A+ | 7.1 | 133 | 148 | 41 | 62 | A+++ | A+ | 7.1 | 187 | 148 | 41 | 62 |
| | EHST30D-***D | A++ | A+ | 7.1 | 131 | 128 | 41 | 62 | A+++ | A+ | 7.1 | 182 | 128 | 41 | 62 |
| | ERST30D-***D | A++ | A+ | 7.1 | 133 | 128 | 41 | 62 | A+++ | A+ | 7.1 | 187 | 128 | 41 | 62 |
| | EHSD-***D | A++ | - | 7.1 | 131 | - | 41 | 62 | A+++ | - | 7.1 | 182 | - | 41 | 62 |
| | ERSD-***D | A++ | - | 7.1 | 133 | - | 41 | 62 | A+++ | - | 7.1 | 187 | - | 41 | 62 |
| SUZ-SWM30VA | EHST17D-****D | A++ | A+ | 4.0 | 130 | 147 | 41 | 57 | A+++ | A+ | 4.0 | 191 | 147 | 41 | 57 |
| | ERST17D-****D | A++ | A+ | 4.0 | 133 | 147 | 41 | 57 | A+++ | A+ | 4.0 | 195 | 147 | 41 | 57 |
| | EHST20D-****D | A++ | A+ | 4.0 | 130 | 147 | 41 | 57 | A+++ | A+ | 4.0 | 191 | 147 | 41 | 57 |
| | ERST20D-****D | A++ | A+ | 4.0 | 133 | 147 | 41 | 57 | A+++ | A+ | 4.0 | 195 | 147 | 41 | 57 |
| | EHST30D-****D | A++ | A+ | 4.0 | 130 | 130 | 41 | 57 | A+++ | A+ | 4.0 | 191 | 130 | 41 | 57 |
| | ERST30D-****D | A++ | A+ | 4.0 | 133 | 130 | 41 | 57 | A+++ | A+ | 4.0 | 195 | 130 | 41 | 57 |
| | EHSD-****D | A++ | - | 4.0 | 130 | - | 41 | 57 | A+++ | - | 4.0 | 191 | - | 41 | 57 |
| | ERSD-****D | A++ | - | 4.0 | 133 | - | 41 | 57 | A+++ | - | 4.0 | 195 | - | 41 | 57 |
| SUZ-SHWM30VAH | EHST17D-****D | A+ | A+ | 4.0 | 124 | 147 | 41 | 57 | A+++ | A+ | 4.0 | 180 | 147 | 41 | 57 |
| | ERST17D-****D | A++ | A+ | 4.0 | 126 | 147 | 41 | 57 | A+++ | A+ | 4.0 | 184 | 147 | 41 | 57 |
| | EHST20D-****D | A+ | A+ | 4.0 | 124 | 147 | 41 | 57 | A+++ | A+ | 4.0 | 180 | 147 | 41 | 57 |
| | ERST20D-****D | A++ | A+ | 4.0 | 126 | 147 | 41 | 57 | A+++ | A+ | 4.0 | 184 | 147 | 41 | 57 |
| | EHST30D-****D | A+ | A+ | 4.0 | 124 | 130 | 41 | 57 | A+++ | A+ | 4.0 | 180 | 130 | 41 | 57 |
| | ERST30D-****D | A++ | A+ | 4.0 | 126 | 130 | 41 | 57 | A+++ | A+ | 4.0 | 184 | 130 | 41 | 57 |
| | EHSD-****D | A+ | - | 4.0 | 124 | - | 41 | 57 | A+++ | - | 4.0 | 180 | - | 41 | 57 |
| | ERSD-****D | A++ | - | 4.0 | 126 | - | 41 | 57 | A+++ | - | 4.0 | 184 | - | 41 | 57 |

Note: E**T17/20*-***D use “Load profile L”.
E**T30*-***D use “Load profile XL”.

| Outdoor unit | Indoor unit | For medium-temperature application | | | | | | | For low-temperature application | | | | | | |
|---|---|---|---|---|---|---|---|---|---|---|---|---|---|---|---|
| | | Seasonal space heating energy efficiency class | Water heating energy efficiency class | Rated heat output under average climate conditions | Seasonal space heating energy efficiency under average climate conditions | Water heating energy efficiency under average climate conditions | Sound power level LWA indoor | Sound power level LWA outdoor | Seasonal space heating energy efficiency class | Water heating energy efficiency class | Rated heat output under average climate conditions | Seasonal space heating energy efficiency under average climate conditions | Water heating energy efficiency under average climate conditions | Sound power level LWA indoor | Sound power level LWA outdoor |
| | | | | kW | % | % | dBA | dBA | | | kW | % | % | dBA | dBA |
| SUZ-SWM40VA2(-SC) | EHST17D-****D | A++ | A+ | 5.0 | 133 | 147 | 41 | 57 | A+++ | A+ | 5.0 | 196 | 147 | 41 | 57 |
| | ERST17D-****D | A++ | A+ | 5.0 | 135 | 147 | 41 | 57 | A+++ | A+ | 5.0 | 200 | 147 | 41 | 57 |
| | EHST20D-****D | A++ | A+ | 5.0 | 133 | 147 | 41 | 57 | A+++ | A+ | 5.0 | 196 | 147 | 41 | 57 |
| | ERST20D-****D | A++ | A+ | 5.0 | 135 | 147 | 41 | 57 | A+++ | A+ | 5.0 | 200 | 147 | 41 | 57 |
| | EHST30D-****D | A++ | A+ | 5.0 | 133 | 130 | 41 | 57 | A+++ | A+ | 5.0 | 196 | 130 | 41 | 57 |
| | ERST30D-****D | A++ | A+ | 5.0 | 135 | 130 | 41 | 57 | A+++ | A+ | 5.0 | 200 | 130 | 41 | 57 |
| | EHSD-****D | A++ | - | 5.0 | 133 | - | 41 | 57 | A+++ | - | 5.0 | 196 | - | 41 | 57 |
| | ERSD-****D | A++ | - | 5.0 | 135 | - | 41 | 57 | A+++ | - | 5.0 | 200 | - | 41 | 57 |
| SUZ-SHWM40VAH(-SC) | EHST17D-****D | A+ | A+ | 5.0 | 124 | 139 | 41 | 58 | A++ | A+ | 5.0 | 172 | 139 | 41 | 58 |
| | ERST17D-****D | A++ | A+ | 5.0 | 126 | 139 | 41 | 58 | A+++ | A+ | 5.0 | 176 | 139 | 41 | 58 |
| | EHST20D-****D | A+ | A+ | 5.0 | 124 | 142 | 41 | 58 | A++ | A+ | 5.0 | 172 | 142 | 41 | 58 |
| | ERST20D-****D | A++ | A+ | 5.0 | 126 | 142 | 41 | 58 | A+++ | A+ | 5.0 | 176 | 142 | 41 | 58 |
| | EHST30D-****D | A+ | A+ | 5.0 | 124 | 128 | 41 | 58 | A++ | A+ | 5.0 | 172 | 128 | 41 | 58 |
| | ERST30D-****D | A++ | A+ | 5.0 | 126 | 128 | 41 | 58 | A+++ | A+ | 5.0 | 176 | 128 | 41 | 58 |
| | EHSD-****D | A+ | - | 5.0 | 124 | - | 41 | 58 | A++ | - | 5.0 | 172 | - | 41 | 58 |
| | ERSD-****D | A++ | - | 5.0 | 126 | - | 41 | 58 | A+++ | - | 5.0 | 176 | - | 41 | 58 |
| SUZ-SWM60VA2(-SC) | EHST17D-****D | A++ | A+ | 6.0 | 134 | 139 | 41 | 60 | A+++ | A+ | 6.0 | 185 | 139 | 41 | 60 |
| | ERST17D-****D | A++ | A+ | 6.0 | 136 | 139 | 41 | 60 | A+++ | A+ | 6.0 | 189 | 139 | 41 | 60 |
| | EHST20D-****D | A++ | A+ | 6.0 | 134 | 142 | 41 | 60 | A+++ | A+ | 6.0 | 185 | 142 | 41 | 60 |
| | ERST20D-****D | A++ | A+ | 6.0 | 136 | 142 | 41 | 60 | A+++ | A+ | 6.0 | 189 | 142 | 41 | 60 |
| | EHST30D-****D | A++ | A+ | 6.0 | 134 | 128 | 41 | 60 | A+++ | A+ | 6.0 | 185 | 128 | 41 | 60 |
| | ERST30D-****D | A++ | A+ | 6.0 | 136 | 128 | 41 | 60 | A+++ | A+ | 6.0 | 189 | 128 | 41 | 60 |
| | EHSD-****D | A++ | - | 6.0 | 134 | - | 41 | 60 | A+++ | - | 6.0 | 185 | - | 41 | 60 |
| | ERSD-****D | A++ | - | 6.0 | 136 | - | 41 | 60 | A+++ | - | 6.0 | 189 | - | 41 | 60 |
| SUZ-SHWM60VAH(-SC) | EHST17D-****D | A++ | A+ | 6.0 | 126 | 145 | 41 | 60 | A+++ | A+ | 6.0 | 175 | 145 | 41 | 60 |
| | ERST17D-****D | A++ | A+ | 6.0 | 128 | 145 | 41 | 60 | A+++ | A+ | 6.0 | 178 | 145 | 41 | 60 |
| | EHST20D-****D | A++ | A+ | 6.0 | 126 | 144 | 41 | 60 | A+++ | A+ | 6.0 | 175 | 144 | 41 | 60 |
| | ERST20D-****D | A++ | A+ | 6.0 | 128 | 144 | 41 | 60 | A+++ | A+ | 6.0 | 178 | 144 | 41 | 60 |
| | EHST30D-****D | A++ | A+ | 6.0 | 126 | 139 | 41 | 60 | A+++ | A+ | 6.0 | 175 | 139 | 41 | 60 |
| | ERST30D-****D | A++ | A+ | 6.0 | 128 | 139 | 41 | 60 | A+++ | A+ | 6.0 | 178 | 139 | 41 | 60 |
| | EHSD-****D | A++ | - | 6.0 | 126 | - | 41 | 60 | A+++ | - | 6.0 | 175 | - | 41 | 60 |
| | ERSD-****D | A++ | - | 6.0 | 128 | - | 41 | 60 | A+++ | - | 6.0 | 178 | - | 41 | 60 |
| SUZ-SWM80VA2 | EHST17D-****D | A++ | A+ | 7.0 | 133 | 145 | 41 | 60 | A+++ | A+ | 7.0 | 183 | 145 | 41 | 60 |
| | ERST17D-****D | A++ | A+ | 7.0 | 135 | 145 | 41 | 60 | A+++ | A+ | 7.0 | 187 | 145 | 41 | 60 |
| | EHST20D-****D | A++ | A+ | 7.0 | 133 | 144 | 41 | 60 | A+++ | A+ | 7.0 | 183 | 144 | 41 | 60 |
| | ERST20D-****D | A++ | A+ | 7.0 | 135 | 144 | 41 | 60 | A+++ | A+ | 7.0 | 187 | 144 | 41 | 60 |
| | EHST30D-****D | A++ | A+ | 7.0 | 133 | 139 | 41 | 60 | A+++ | A+ | 7.0 | 183 | 139 | 41 | 60 |
| | ERST30D-****D | A++ | A+ | 7.0 | 135 | 139 | 41 | 60 | A+++ | A+ | 7.0 | 187 | 139 | 41 | 60 |
| | EHSD-****D | A++ | - | 7.0 | 133 | - | 41 | 60 | A+++ | - | 7.0 | 183 | - | 41 | 60 |
| | ERSD-****D | A++ | - | 7.0 | 135 | - | 41 | 60 | A+++ | - | 7.0 | 187 | - | 41 | 60 |

Note: E**T17/20*-***D use “Load profile L”.
E**T30*-***D use “Load profile XL”.

| Outdoor unit | Indoor unit | For medium-temperature application | | | | | | | For low-temperature application | | | | | | |
|---|---|---|---|---|---|---|---|---|---|---|---|---|---|---|---|
| | | Seasonal space heating energy efficiency class | Water heating energy efficiency class | Rated heat output under average climate conditions | Seasonal space heating energy efficiency under average climate conditions | Water heating energy efficiency under average climate conditions | Sound power level LWA indoor | Sound power level LWA outdoor | Seasonal space heating energy efficiency class | Water heating energy efficiency class | Rated heat output under average climate conditions | Seasonal space heating energy efficiency under average climate conditions | Water heating energy efficiency under average climate conditions | Sound power level LWA indoor | Sound power level LWA outdoor |
| | | | | kW | % | % | dBA | dBA | | | kW | % | % | dBA | dBA |
| SUZ-SWM80VAH2 | EHST17D-****D | A++ | A+ | 7.0 | 128 | 145 | 41 | 60 | A+++ | A+ | 7.0 | 175 | 145 | 41 | 60 |
| | ERST17D-****D | A++ | A+ | 7.0 | 130 | 145 | 41 | 60 | A+++ | A+ | 7.0 | 178 | 145 | 41 | 60 |
| | EHST20D-****D | A++ | A+ | 7.0 | 128 | 144 | 41 | 60 | A+++ | A+ | 7.0 | 175 | 144 | 41 | 60 |
| | ERST20D-****D | A++ | A+ | 7.0 | 130 | 144 | 41 | 60 | A+++ | A+ | 7.0 | 178 | 144 | 41 | 60 |
| | EHST30D-****D | A++ | A+ | 7.0 | 128 | 139 | 41 | 60 | A+++ | A+ | 7.0 | 175 | 139 | 41 | 60 |
| | ERST30D-****D | A++ | A+ | 7.0 | 130 | 139 | 41 | 60 | A+++ | A+ | 7.0 | 178 | 139 | 41 | 60 |
| | EHSD-****D | A++ | - | 7.0 | 128 | - | 41 | 60 | A+++ | - | 7.0 | 175 | - | 41 | 60 |
| | ERSD-****D | A++ | - | 7.0 | 130 | - | 41 | 60 | A+++ | - | 7.0 | 178 | - | 41 | 60 |
| SUZ-SWM100VA | EHST17D-****D | A++ | A+ | 8.0 | 133 | 145 | 41 | 62 | A+++ | A+ | 8.0 | 179 | 145 | 41 | 62 |
| | ERST17D-****D | A++ | A+ | 8.0 | 134 | 145 | 41 | 62 | A+++ | A+ | 8.0 | 182 | 145 | 41 | 62 |
| | EHST20D-****D | A++ | A+ | 8.0 | 133 | 144 | 41 | 62 | A+++ | A+ | 8.0 | 179 | 144 | 41 | 62 |
| | ERST20D-****D | A++ | A+ | 8.0 | 134 | 144 | 41 | 62 | A+++ | A+ | 8.0 | 182 | 144 | 41 | 62 |
| | EHST30D-****D | A++ | A+ | 8.0 | 133 | 139 | 41 | 62 | A+++ | A+ | 8.0 | 179 | 139 | 41 | 62 |
| | ERST30D-****D | A++ | A+ | 8.0 | 134 | 139 | 41 | 62 | A+++ | A+ | 8.0 | 182 | 139 | 41 | 62 |
| | EHSD-****D | A++ | - | 8.0 | 133 | - | 41 | 62 | A+++ | - | 8.0 | 179 | - | 41 | 62 |
| | ERSD-****D | A++ | - | 8.0 | 134 | - | 41 | 62 | A+++ | - | 8.0 | 182 | - | 41 | 62 |
| SUZ-SWM100VAH | EHST17D-****D | A++ | A+ | 8.0 | 127 | 145 | 41 | 62 | A++ | A+ | 8.0 | 174 | 145 | 41 | 62 |
| | ERST17D-****D | A++ | A+ | 8.0 | 129 | 145 | 41 | 62 | A+++ | A+ | 8.0 | 177 | 145 | 41 | 62 |
| | EHST20D-****D | A++ | A+ | 8.0 | 127 | 144 | 41 | 62 | A++ | A+ | 8.0 | 174 | 144 | 41 | 62 |
| | ERST20D-****D | A++ | A+ | 8.0 | 129 | 144 | 41 | 62 | A+++ | A+ | 8.0 | 177 | 144 | 41 | 62 |
| | EHST30D-****D | A++ | A+ | 8.0 | 127 | 139 | 41 | 62 | A++ | A+ | 8.0 | 174 | 139 | 41 | 62 |
| | ERST30D-****D | A++ | A+ | 8.0 | 129 | 139 | 41 | 62 | A+++ | A+ | 8.0 | 177 | 139 | 41 | 62 |
| | EHSD-****D | A++ | - | 8.0 | 127 | - | 41 | 62 | A++ | - | 8.0 | 174 | - | 41 | 62 |
| | ERSD-****D | A++ | - | 8.0 | 129 | - | 41 | 62 | A+++ | - | 8.0 | 177 | - | 41 | 62 |
| PUZ-SWM60VAA | EHST17D-****D | A++ | A+ | 6.0 | 126 | 134 | 41 | 54 | A+++ | A+ | 6.0 | 181 | 134 | 41 | 54 |
| | ERST17D-****D | A++ | A+ | 6.0 | 128 | 134 | 41 | 54 | A+++ | A+ | 6.0 | 184 | 134 | 41 | 54 |
| | EHST20D-****D | A++ | A+ | 6.0 | 126 | 134 | 41 | 54 | A+++ | A+ | 6.0 | 181 | 134 | 41 | 54 |
| | ERST20D-****D | A++ | A+ | 6.0 | 128 | 134 | 41 | 54 | A+++ | A+ | 6.0 | 184 | 134 | 41 | 54 |
| | EHST30D-****D | A++ | A+ | 6.0 | 126 | 133 | 41 | 54 | A+++ | A+ | 6.0 | 181 | 133 | 41 | 54 |
| | ERST30D-****D | A++ | A+ | 6.0 | 128 | 133 | 41 | 54 | A+++ | A+ | 6.0 | 184 | 133 | 41 | 54 |
| | EHSD-****D | A++ | - | 6.0 | 126 | - | 41 | 54 | A+++ | - | 6.0 | 181 | - | 41 | 54 |
| | ERSD-****D | A++ | - | 6.0 | 128 | - | 41 | 54 | A+++ | - | 6.0 | 184 | - | 41 | 54 |
| PUZ-SWM80V/YAA | EHST17D-****D | A++ | A+ | 8.0 | 129/128 | 134 | 41 | 54 | A+++ | A+ | 8.0 | 181/179 | 134 | 41 | 54 |
| | ERST17D-****D | A++ | A+ | 8.0 | 130/130 | 134 | 41 | 54 | A+++ | A+ | 8.0 | 184/183 | 134 | 41 | 54 |
| | EHST20D-****D | A++ | A+ | 8.0 | 129/128 | 134 | 41 | 54 | A+++ | A+ | 8.0 | 181/179 | 134 | 41 | 54 |
| | ERST20D-****D | A++ | A+ | 8.0 | 130/130 | 134 | 41 | 54 | A+++ | A+ | 8.0 | 184/183 | 134 | 41 | 54 |
| | EHST30D-****D | A++ | A+ | 8.0 | 129/128 | 133 | 41 | 54 | A+++ | A+ | 8.0 | 181/179 | 133 | 41 | 54 |
| | ERST30D-****D | A++ | A+ | 8.0 | 130/130 | 133 | 41 | 54 | A+++ | A+ | 8.0 | 184/183 | 133 | 41 | 54 |
| | EHSD-****D | A++ | - | 8.0 | 129/128 | - | 41 | 54 | A+++ | - | 8.0 | 181/179 | - | 41 | 54 |
| | ERSD-****D | A++ | - | 8.0 | 130/130 | - | 41 | 54 | A+++ | - | 8.0 | 184/183 | - | 41 | 54 |
| PUZ-SWM100V/YAA | EHST20D-****D | A++ | A+ | 10.0 | 132/132 | 134 | 41 | 58 | A+++ | A+ | 10.0 | 178/177 | 134 | 41 | 58 |
| | ERST20D-****D | A++ | A+ | 10.0 | 134/133 | 134 | 41 | 58 | A+++ | A+ | 10.0 | 180/180 | 134 | 41 | 58 |
| | EHST30D-****D | A++ | A+ | 10.0 | 132/132 | 133 | 41 | 58 | A+++ | A+ | 10.0 | 178/177 | 133 | 41 | 58 |
| | ERST30D-****D | A++ | A+ | 10.0 | 134/133 | 133 | 41 | 58 | A+++ | A+ | 10.0 | 180/180 | 133 | 41 | 58 |
| | EHSD-****D | A++ | - | 10.0 | 132/132 | - | 41 | 58 | A+++ | - | 10.0 | 178/177 | - | 41 | 58 |
| | ERSD-****D | A++ | - | 10.0 | 134/133 | - | 41 | 58 | A+++ | - | 10.0 | 180/180 | - | 41 | 58 |

Note: E**T17/20*-***D use “Load profile L”.
E**T30*-***D use “Load profile XL”.

| Outdoor unit | Indoor unit | For medium-temperature application | | | | | | | For low-temperature application | | | | | | |
|---|---|---|---|---|---|---|---|---|---|---|---|---|---|---|---|
| | | Seasonal space heating energy efficiency class | Water heating energy efficiency class | Rated heat output under average climate conditions | Seasonal space heating energy efficiency under average climate conditions | Water heating energy efficiency under average climate conditions | Sound power level LWA indoor | Sound power level LWA outdoor | Seasonal space heating energy efficiency class | Water heating energy efficiency class | Rated heat output under average climate conditions | Seasonal space heating energy efficiency under average climate conditions | Water heating energy efficiency under average climate conditions | Sound power level LWA indoor | Sound power level LWA outdoor |
| | | | | kW | % | % | dBA | dBA | | | kW | % | % | dBA | dBA |
| PUZ-SWM120V/YAA | EHST20D-****D | A++ | A+ | 12.1 | 131/131 | 134 | 41 | 58 | A+++ | A+ | 12.1 | 177/176 | 134 | 41 | 58 |
| | ERST20D-****D | A++ | A+ | 12.1 | 132/132 | 134 | 41 | 58 | A+++ | A+ | 12.1 | 178/178 | 134 | 41 | 58 |
| | EHST30D-****D | A++ | A+ | 12.1 | 131/131 | 133 | 41 | 58 | A+++ | A+ | 12.1 | 177/176 | 133 | 41 | 58 |
| | ERST30D-****D | A++ | A+ | 12.1 | 132/132 | 133 | 41 | 58 | A+++ | A+ | 12.1 | 178/178 | 133 | 41 | 58 |
| | EHSD-****D | A++ | - | 12.1 | 131/131 | - | 41 | 58 | A+++ | - | 12.1 | 177/176 | - | 41 | 58 |
| | ERSD-****D | A++ | - | 12.1 | 132/132 | - | 41 | 58 | A+++ | - | 12.1 | 178/178 | - | 41 | 58 |
| PUZ-SWM140V/YAA | EHST20D-****D | A++ | A+ | 14.0 | 134/134 | 123 | 41 | 58 | A+++ | A+ | 14.0 | 175/175 | 123 | 41 | 58 |
| | ERST20D-****D | A++ | A+ | 14.0 | 135/135 | 123 | 41 | 58 | A+++ | A+ | 14.0 | 177/177 | 123 | 41 | 58 |
| | EHST30D-****D | A++ | A+ | 14.0 | 134/134 | 114 | 41 | 58 | A+++ | A+ | 14.0 | 175/175 | 114 | 41 | 58 |
| | ERST30D-****D | A++ | A+ | 14.0 | 135/135 | 114 | 41 | 58 | A+++ | A+ | 14.0 | 177/177 | 114 | 41 | 58 |
| | EHSD-****D | A++ | - | 14.0 | 134/134 | - | 41 | 58 | A+++ | - | 14.0 | 175/175 | - | 41 | 58 |
| | ERSD-****D | A++ | - | 14.0 | 135/135 | - | 41 | 58 | A+++ | - | 14.0 | 177/177 | - | 41 | 58 |
| PUZ-SHWM60VAA | EHST17D-****D | A++ | A+ | 6.0 | 129 | 134 | 41 | 54 | A+++ | A+ | 6.0 | 184 | 134 | 41 | 54 |
| | ERST17D-****D | A++ | A+ | 6.0 | 131 | 134 | 41 | 54 | A+++ | A+ | 6.0 | 188 | 134 | 41 | 54 |
| | EHST20D-****D | A++ | A+ | 6.0 | 129 | 134 | 41 | 54 | A+++ | A+ | 6.0 | 184 | 134 | 41 | 54 |
| | ERST20D-****D | A++ | A+ | 6.0 | 131 | 134 | 41 | 54 | A+++ | A+ | 6.0 | 188 | 134 | 41 | 54 |
| | EHST30D-****D | A++ | A+ | 6.0 | 129 | 133 | 41 | 54 | A+++ | A+ | 6.0 | 184 | 133 | 41 | 54 |
| | ERST30D-****D | A++ | A+ | 6.0 | 131 | 133 | 41 | 54 | A+++ | A+ | 6.0 | 188 | 133 | 41 | 54 |
| | EHSD-****D | A++ | - | 6.0 | 129 | - | 41 | 54 | A+++ | - | 6.0 | 184 | - | 41 | 54 |
| | ERSD-****D | A++ | - | 6.0 | 131 | - | 41 | 54 | A+++ | - | 6.0 | 188 | - | 41 | 54 |
| PUZ-SHWM80V/YAA | EHST17D-****D | A++ | A+ | 8.0 | 132/131 | 134 | 41 | 54 | A+++ | A+ | 8.0 | 184/182 | 134 | 41 | 54 |
| | ERST17D-****D | A++ | A+ | 8.0 | 133/133 | 134 | 41 | 54 | A+++ | A+ | 8.0 | 187/187 | 134 | 41 | 54 |
| | EHST20D-****D | A++ | A+ | 8.0 | 132/131 | 134 | 41 | 54 | A+++ | A+ | 8.0 | 184/182 | 134 | 41 | 54 |
| | ERST20D-****D | A++ | A+ | 8.0 | 133/133 | 134 | 41 | 54 | A+++ | A+ | 8.0 | 187/187 | 134 | 41 | 54 |
| | EHST30D-****D | A++ | A+ | 8.0 | 132/131 | 133 | 41 | 54 | A+++ | A+ | 8.0 | 184/182 | 133 | 41 | 54 |
| | ERST30D-****D | A++ | A+ | 8.0 | 133/133 | 133 | 41 | 54 | A+++ | A+ | 8.0 | 187/187 | 133 | 41 | 54 |
| | EHSD-****D | A++ | - | 8.0 | 132/131 | - | 41 | 54 | A+++ | - | 8.0 | 184/182 | - | 41 | 54 |
| | ERSD-****D | A++ | - | 8.0 | 133/133 | - | 41 | 54 | A+++ | - | 8.0 | 187/187 | - | 41 | 54 |
| PUZ-SHWM100V/YAA | EHST20D-****D | A++ | A+ | 10.0 | 136/135 | 134 | 41 | 58 | A+++ | A+ | 10.0 | 183/181 | 134 | 41 | 58 |
| | ERST20D-****D | A++ | A+ | 10.0 | 138/137 | 134 | 41 | 58 | A+++ | A+ | 10.0 | 185/185 | 134 | 41 | 58 |
| | EHST30D-****D | A++ | A+ | 10.0 | 136/135 | 133 | 41 | 58 | A+++ | A+ | 10.0 | 183/181 | 133 | 41 | 58 |
| | ERST30D-****D | A++ | A+ | 10.0 | 138/137 | 133 | 41 | 58 | A+++ | A+ | 10.0 | 185/185 | 133 | 41 | 58 |
| | EHSD-****D | A++ | - | 10.0 | 136/135 | - | 41 | 58 | A+++ | - | 10.0 | 183/181 | - | 41 | 58 |
| | ERSD-****D | A++ | - | 10.0 | 138/137 | - | 41 | 58 | A+++ | - | 10.0 | 185/185 | - | 41 | 58 |
| PUZ-SHWM120V/YAA | EHST20D-****D | A++ | A+ | 12.1 | 136/136 | 134 | 41 | 58 | A+++ | A+ | 12.1 | 179/178 | 134 | 41 | 58 |
| | ERST20D-****D | A++ | A+ | 12.1 | 138/137 | 134 | 41 | 58 | A+++ | A+ | 12.1 | 181/181 | 134 | 41 | 58 |
| | EHST30D-****D | A++ | A+ | 12.1 | 136/136 | 133 | 41 | 58 | A+++ | A+ | 12.1 | 179/178 | 133 | 41 | 58 |
| | ERST30D-****D | A++ | A+ | 12.1 | 138/137 | 133 | 41 | 58 | A+++ | A+ | 12.1 | 181/181 | 133 | 41 | 58 |
| | EHSD-****D | A++ | - | 12.1 | 136/136 | - | 41 | 58 | A+++ | - | 12.1 | 179/178 | - | 41 | 58 |
| | ERSD-****D | A++ | - | 12.1 | 138/137 | - | 41 | 58 | A+++ | - | 12.1 | 181/181 | - | 41 | 58 |
| PUZ-SHWM140V/YAA | EHST20D-****D | A++ | A+ | 14.0 | 141/141 | 123 | 41 | 58 | A+++ | A+ | 14.0 | 183/182 | 123 | 41 | 58 |
| | ERST20D-****D | A++ | A+ | 14.0 | 142/142 | 123 | 41 | 58 | A+++ | A+ | 14.0 | 184/184 | 123 | 41 | 58 |
| | EHST30D-****D | A++ | A+ | 14.0 | 141/141 | 114 | 41 | 58 | A+++ | A+ | 14.0 | 183/182 | 114 | 41 | 58 |
| | ERST30D-****D | A++ | A+ | 14.0 | 142/142 | 114 | 41 | 58 | A+++ | A+ | 14.0 | 184/184 | 114 | 41 | 58 |
| | EHSD-****D | A++ | - | 14.0 | 141/141 | - | 41 | 58 | A+++ | - | 14.0 | 183/182 | - | 41 | 58 |
| | ERSD-****D | A++ | - | 14.0 | 142/142 | - | 41 | 58 | A+++ | - | 14.0 | 184/184 | - | 41 | 58 |

Note: E**T17/20*-***D use “Load profile L”.
E**T30*-***D use “Load profile XL”.

| Outdoor unit | Indoor unit | For medium-temperature application | | | | | | | For low-temperature application | | | | | | |
|---|---|---|---|---|---|---|---|---|---|---|---|---|---|---|---|
| | | Seasonal space heating energy efficiency class | Water heating energy efficiency class | Rated heat output under average climate conditions | Seasonal space heating energy efficiency under average climate conditions | Water heating energy efficiency under average climate conditions | Sound power level LWA indoor | Sound power level LWA outdoor | Seasonal space heating energy efficiency class | Water heating energy efficiency class | Rated heat output under average climate conditions | Seasonal space heating energy efficiency under average climate conditions | Water heating energy efficiency under average climate conditions | Sound power level LWA indoor | Sound power level LWA outdoor |
| | | | | kW | % | % | dBA | dBA | | | kW | % | % | dBA | dBA |
| PUD-SWM60VAA(-BS) | E*ST17D-***D | $A^{++}$ | $A^{+}$ | 6.0 | 130 | 136 | 41 | 55 | $A^{+++}$ | $A^{+}$ | 6.0 | 175 | 136 | 41 | 55 |
| | E*ST20D-***D | $A^{++}$ | $A^{+}$ | 6.0 | 130 | 148 | 41 | 55 | $A^{+++}$ | $A^{+}$ | 6.0 | 175 | 148 | 41 | 55 |
| | E*ST30D-***D | $A^{++}$ | A | 6.0 | 130 | 121 | 41 | 55 | $A^{+++}$ | A | 6.0 | 175 | 121 | 41 | 55 |
| | E*SD-***D | $A^{++}$ | - | 6.0 | 130 | - | 41 | 55 | $A^{+++}$ | - | 6.0 | 175 | - | 41 | 55 |
| PUD-SWM80V/YAA(-BS) | E*ST17D-***D | $A^{++}$ | $A^{+}$ | 8.0 | 131/130 | 136 | 41 | 56 | $A^{+++}$ | $A^{+}$ | 8.0 | 178/176 | 136 | 41 | 56 |
| | E*ST20D-***D | $A^{++}$ | $A^{+}$ | 8.0 | 131/130 | 148 | 41 | 56 | $A^{+++}$ | $A^{+}$ | 8.0 | 178/176 | 148 | 41 | 56 |
| | E*ST30D-***D | $A^{++}$ | A | 8.0 | 131/130 | 121 | 41 | 56 | $A^{+++}$ | A | 8.0 | 178/176 | 121 | 41 | 56 |
| | E*SD-***D | $A^{++}$ | - | 8.0 | 131/130 | - | 41 | 56 | $A^{+++}$ | - | 8.0 | 178/176 | - | 41 | 56 |
| PUD-SWM100V/YAA(-BS) | E*ST20D-***D | $A^{++}$ | $A^{+}$ | 10.0 | 131/130 | 148 | 41 | 59 | $A^{+++}$ | $A^{+}$ | 10.0 | 178/177 | 148 | 41 | 59 |
| | E*ST30D-***D | $A^{++}$ | A | 10.0 | 131/130 | 121 | 41 | 59 | $A^{+++}$ | A | 10.0 | 178/177 | 121 | 41 | 59 |
| | E*SD-***D | $A^{++}$ | - | 10.0 | 131/130 | - | 41 | 59 | $A^{+++}$ | - | 10.0 | 178/177 | - | 41 | 59 |
| PUD-SWM120V/YAA(-BS) | E*ST20D-***D | $A^{++}$ | $A^{+}$ | 12.0 | 129/128 | 148 | 41 | 60 | $A^{+++}$ | $A^{+}$ | 12.0 | 177/176 | 148 | 41 | 60 |
| | E*ST30D-***D | $A^{++}$ | A | 12.0 | 129/128 | 121 | 41 | 60 | $A^{+++}$ | A | 12.0 | 177/176 | 121 | 41 | 60 |
| | E*SD-***D | $A^{++}$ | - | 12.0 | 129/128 | - | 41 | 60 | $A^{+++}$ | - | 12.0 | 177/176 | - | 41 | 60 |
| PUD-SHWM60VAA(-BS) | E*ST17D-***D | $A^{++}$ | $A^{+}$ | 6.0 | 134 | 136 | 41 | 55 | $A^{+++}$ | $A^{+}$ | 6.0 | 178 | 136 | 41 | 55 |
| | E*ST20D-***D | $A^{++}$ | $A^{+}$ | 6.0 | 134 | 148 | 41 | 55 | $A^{+++}$ | $A^{+}$ | 6.0 | 178 | 148 | 41 | 55 |
| | E*ST30D-***D | $A^{++}$ | A | 6.0 | 134 | 121 | 41 | 55 | $A^{+++}$ | A | 6.0 | 178 | 121 | 41 | 55 |
| | E*SD-***D | $A^{++}$ | - | 6.0 | 134 | - | 41 | 55 | $A^{+++}$ | - | 6.0 | 178 | - | 41 | 55 |
| PUD-SHWM80V/YAA(-BS) | E*ST17D-***D | $A^{++}$ | $A^{+}$ | 8.0 | 135/134 | 136 | 41 | 56 | $A^{+++}$ | $A^{+}$ | 8.0 | 181/179 | 136 | 41 | 56 |
| | E*ST20D-***D | $A^{++}$ | $A^{+}$ | 8.0 | 135/134 | 148 | 41 | 56 | $A^{+++}$ | $A^{+}$ | 8.0 | 181/179 | 148 | 41 | 56 |
| | E*ST30D-***D | $A^{++}$ | A | 8.0 | 135/134 | 121 | 41 | 56 | $A^{+++}$ | A | 8.0 | 181/179 | 121 | 41 | 56 |
| | E*SD-***D | $A^{++}$ | - | 8.0 | 135/134 | - | 41 | 56 | $A^{+++}$ | - | 8.0 | 181/179 | - | 41 | 56 |
| PUD-SHWM100V/YAA(-BS) | E*ST20D-***D | $A^{++}$ | $A^{+}$ | 10.0 | 136/135 | 148 | 41 | 59 | $A^{+++}$ | $A^{+}$ | 10.0 | 180/178 | 148 | 41 | 59 |
| | E*ST30D-***D | $A^{++}$ | A | 10.0 | 136/135 | 121 | 41 | 59 | $A^{+++}$ | A | 10.0 | 180/178 | 121 | 41 | 59 |
| | E*SD-***D | $A^{++}$ | - | 10.0 | 136/135 | - | 41 | 59 | $A^{+++}$ | - | 10.0 | 180/178 | - | 41 | 59 |
| PUD-SHWM120V/YAA(-BS) | E*ST20D-***D | $A^{++}$ | $A^{+}$ | 12.0 | 135/134 | 148 | 41 | 60 | $A^{+++}$ | $A^{+}$ | 12.0 | 179/177 | 148 | 41 | 60 |
| | E*ST30D-***D | $A^{++}$ | A | 12.0 | 135/134 | 121 | 41 | 60 | $A^{+++}$ | A | 12.0 | 179/177 | 121 | 41 | 60 |
| | E*SD-***D | $A^{++}$ | - | 12.0 | 135/134 | - | 41 | 60 | $A^{+++}$ | - | 12.0 | 179/177 | - | 41 | 60 |
| PUD-SHWM140V/YAA(-BS) | E*ST20D-***D | $A^{++}$ | $A^{+}$ | 14.0 | 134/134 | 145 | 41 | 62 | $A^{+++}$ | $A^{+}$ | 14.0 | 179/177 | 145 | 41 | 62 |
| | E*ST30D-***D | $A^{++}$ | A | 14.0 | 134/134 | 121 | 41 | 62 | $A^{+++}$ | A | 14.0 | 179/177 | 121 | 41 | 62 |
| | E*SD-***D | $A^{++}$ | - | 14.0 | 134/134 | - | 41 | 62 | $A^{+++}$ | - | 14.0 | 179/177 | - | 41 | 62 |
| PUHZ-SW75V/YAA(-BS) | EHST17D-***D | $A^{++}$ | $A^{+}$ | 7.1 | 129/128 | 136 | 41 | 58 | $A^{++}$ | $A^{+}$ | 7.2 | 162/160 | 136 | 41 | 58 |
| | ERST17D-***D | $A^{++}$ | $A^{+}$ | 7.1 | 132/132 | 136 | 41 | 58 | $A^{++}$ | $A^{+}$ | 7.2 | 166/165 | 136 | 41 | 58 |
| | EHST20D-***D | $A^{++}$ | $A^{+}$ | 7.1 | 129/128 | 145 | 41 | 58 | $A^{++}$ | $A^{+}$ | 7.2 | 162/160 | 145 | 41 | 58 |
| | ERST20D-***D | $A^{++}$ | $A^{+}$ | 7.1 | 132/132 | 145 | 41 | 58 | $A^{++}$ | $A^{+}$ | 7.2 | 166/165 | 145 | 41 | 58 |
| | EHST30D-***D | $A^{++}$ | A | 7.1 | 129/128 | 120 | 41 | 58 | $A^{++}$ | A | 7.2 | 162/160 | 120 | 41 | 58 |
| | ERST30D-***D | $A^{++}$ | A | 7.1 | 132/132 | 120 | 41 | 58 | $A^{++}$ | A | 7.2 | 166/165 | 120 | 41 | 58 |
| | EHSD-***D | $A^{++}$ | - | 7.1 | 129/128 | - | 41 | 58 | $A^{++}$ | - | 7.2 | 162/160 | - | 41 | 58 |
| | ERSD-***D | $A^{++}$ | - | 7.1 | 132/132 | - | 41 | 58 | $A^{++}$ | - | 7.2 | 166/165 | - | 41 | 58 |
| PUHZ-SW100V/YAA(-BS) | EHST20C-***D | $A^{++}$ | $A^{+}$ | 10.0 | 130/129 | 145 | 40 | 60 | $A^{++}$ | $A^{+}$ | 10.6 | 167/165 | 145 | 40 | 60 |
| | ERST20C-***D | $A^{++}$ | $A^{+}$ | 10.0 | 132/132 | 145 | 40 | 60 | $A^{++}$ | $A^{+}$ | 10.6 | 170/169 | 145 | 40 | 60 |
| | EHST30C-***D | $A^{++}$ | A | 10.0 | 130/129 | 120 | 40 | 60 | $A^{++}$ | A | 10.6 | 167/165 | 120 | 40 | 60 |
| | ERST30C-***D | $A^{++}$ | A | 10.0 | 132/132 | 120 | 40 | 60 | $A^{++}$ | A | 10.6 | 170/169 | 120 | 40 | 60 |
| | EHSC-***D | $A^{++}$ | - | 10.0 | 130/129 | - | 40 | 60 | $A^{++}$ | - | 10.6 | 167/165 | - | 40 | 60 |
| | ERSC-***D | $A^{++}$ | - | 10.0 | 132/132 | - | 40 | 60 | $A^{++}$ | - | 10.6 | 170/169 | - | 40 | 60 |

Note: E**T17/20*-***D use “Load profile L”.
E**T30*-***D use “Load profile XL”.

| Outdoor unit | Indoor unit | For medium-temperature application | | | | | | | For low-temperature application | | | | | | |
|---|---|---|---|---|---|---|---|---|---|---|---|---|---|---|---|
| | | Seasonal space heating energy efficiency class | Water heating energy efficiency class | Rated heat output under average climate conditions | Seasonal space heating energy efficiency under average climate conditions | Water heating energy efficiency under average climate conditions | Sound power level LWA indoor | Sound power level LWA outdoor | Seasonal space heating energy efficiency class | Water heating energy efficiency class | Rated heat output under average climate conditions | Seasonal space heating energy efficiency under average climate conditions | Water heating energy efficiency under average climate conditions | Sound power level LWA indoor | Sound power level LWA outdoor |
| | | | | kW | % | % | dBA | dBA | | | kW | % | % | dBA | dBA |
| PUHZ-SW120V/YHA(-BS) | EHST20C-***D | $A^{++}$ | $A^{+}$ | 12.1 | 125/125 | 138 | 40 | 72 | $A^{++}$ | $A^{+}$ | 12.9 | 162/162 | 138 | 40 | 72 |
| | ERST20C-***D | $A^{++}$ | $A^{+}$ | 12.1 | 127/127 | 138 | 40 | 72 | $A^{++}$ | $A^{+}$ | 12.9 | 164/164 | 138 | 40 | 72 |
| | EHST30C-***D | $A^{++}$ | A | 12.1 | 125/125 | 118 | 40 | 72 | $A^{++}$ | A | 12.9 | 162/162 | 118 | 40 | 72 |
| | ERST30C-***D | $A^{++}$ | A | 12.1 | 127/127 | 118 | 40 | 72 | $A^{++}$ | A | 12.9 | 164/164 | 118 | 40 | 72 |
| | EHSC-***D | $A^{++}$ | - | 12.1 | 125/125 | - | 40 | 72 | $A^{++}$ | - | 12.9 | 162/162 | - | 40 | 72 |
| | ERSC-***D | $A^{++}$ | - | 12.1 | 127/127 | - | 40 | 72 | $A^{++}$ | - | 12.9 | 164/164 | - | 40 | 72 |
| PUHZ-SW160YKA(-BS) | EHSE-***D | $A^{++}$ | - | 13.5 | 125 | - | 45 | 78 | $A^{++}$ | - | 15.3 | 151 | - | 45 | 78 |
| | ERSE-***D | $A^{++}$ | - | 13.5 | 126 | - | 45 | 78 | $A^{++}$ | - | 15.3 | 152 | - | 45 | 78 |
| PUHZ-SW200YKA(-BS) | EHSE-***D | $A^{++}$ | - | 15.5 | 127 | - | 45 | 78 | $A^{++}$ | - | 17.3 | 147 | - | 45 | 78 |
| | ERSE-***D | $A^{++}$ | - | 15.5 | 129 | - | 45 | 78 | $A^{++}$ | - | 17.3 | 148 | - | 45 | 78 |
| PUHZ-SHW80V/YAA(-BS) | EHST20C-***D | $A^{++}$ | $A^{+}$ | 9.0 | 133/132 | 145 | 40 | 59 | $A^{++}$ | $A^{+}$ | 9.6 | 169/167 | 145 | 40 | 59 |
| | ERST20C-***D | $A^{++}$ | $A^{+}$ | 9.0 | 135/134 | 145 | 40 | 59 | $A^{++}$ | $A^{+}$ | 9.6 | 172/172 | 145 | 40 | 59 |
| | EHST30C-***D | $A^{++}$ | A | 9.0 | 133/132 | 120 | 40 | 59 | $A^{++}$ | A | 9.6 | 169/167 | 120 | 40 | 59 |
| | ERST30C-***D | $A^{++}$ | A | 9.0 | 135/134 | 120 | 40 | 59 | $A^{++}$ | A | 9.6 | 172/172 | 120 | 40 | 59 |
| | EHSC-***D | $A^{++}$ | - | 9.0 | 133/132 | - | 40 | 59 | $A^{++}$ | - | 9.6 | 169/167 | - | 40 | 59 |
| | ERSC-***D | $A^{++}$ | - | 9.0 | 135/134 | - | 40 | 59 | $A^{++}$ | - | 9.6 | 172/172 | - | 40 | 59 |
| PUHZ-SHW112V/YAA(-BS) | EHST20C-***D | $A^{++}$ | $A^{+}$ | 12.7 | 135/135 | 145 | 40 | 60 | $A^{++}$ | $A^{+}$ | 13.9 | 171/169 | 145 | 40 | 60 |
| | ERST20C-***D | $A^{++}$ | $A^{+}$ | 12.7 | 137/137 | 145 | 40 | 60 | $A^{++}$ | $A^{+}$ | 13.9 | 173/173 | 145 | 40 | 60 |
| | EHST30C-***D | $A^{++}$ | A | 12.7 | 135/135 | 120 | 40 | 60 | $A^{++}$ | A | 13.9 | 171/169 | 120 | 40 | 60 |
| | ERST30C-***D | $A^{++}$ | A | 12.7 | 137/137 | 120 | 40 | 60 | $A^{++}$ | A | 13.9 | 173/173 | 120 | 40 | 60 |
| | EHSC-***D | $A^{++}$ | - | 12.7 | 135/135 | - | 40 | 60 | $A^{++}$ | - | 13.9 | 171/169 | - | 40 | 60 |
| | ERSC-***D | $A^{++}$ | - | 12.7 | 137/137 | - | 40 | 60 | $A^{++}$ | - | 13.9 | 173/173 | - | 40 | 60 |
| PUHZ-SHW140YHA | EHST20C-***D | $A^{++}$ | $A^{+}$ | 15.8 | 127 | 138 | 40 | 70 | $A^{++}$ | $A^{+}$ | 17.0 | 163 | 138 | 40 | 70 |
| | ERST20C-***D | $A^{++}$ | $A^{+}$ | 15.8 | 128 | 138 | 40 | 70 | $A^{++}$ | $A^{+}$ | 17.0 | 165 | 138 | 40 | 70 |
| | EHST30C-***D | $A^{++}$ | A | 15.8 | 127 | 118 | 40 | 70 | $A^{++}$ | A | 17.0 | 163 | 118 | 40 | 70 |
| | ERST30C-***D | $A^{++}$ | A | 15.8 | 128 | 118 | 40 | 70 | $A^{++}$ | A | 17.0 | 165 | 118 | 40 | 70 |
| | EHSC-***D | $A^{++}$ | - | 15.8 | 127 | - | 40 | 70 | $A^{++}$ | - | 17.0 | 163 | - | 40 | 70 |
| | ERSC-***D | $A^{++}$ | - | 15.8 | 128 | - | 40 | 70 | $A^{++}$ | - | 17.0 | 165 | - | 40 | 70 |
| PUHZ-SHW230YKA2 | EHSE-***D | $A^{++}$ | - | 23.0 | 127 | - | 45 | 75 | $A^{++}$ | - | 25.0 | 164 | - | 45 | 75 |
| | ERSE-***D | $A^{++}$ | - | 23.0 | 128 | - | 45 | 75 | $A^{++}$ | - | 25.0 | 165 | - | 45 | 75 |
| PUZ-WM50VHA(-BS) | EHPT17X-***D(W) | $A^{++}$ | $A^{+}$ | 5.0 | 129 | 120 | 40 | 61 | $A^{+++}$ | $A^{+}$ | 5.0 | 183 | 120 | 40 | 61 |
| | ERPT17X-***D(W) | $A^{++}$ | $A^{+}$ | 5.0 | 133 | 120 | 40 | 61 | $A^{+++}$ | $A^{+}$ | 5.0 | 190 | 120 | 40 | 61 |
| | EHPT20X-***D(W) | $A^{++}$ | $A^{+}$ | 5.0 | 129 | 135 | 40 | 61 | $A^{+++}$ | $A^{+}$ | 5.0 | 183 | 135 | 40 | 61 |
| | ERPT20X-***D(W) | $A^{++}$ | $A^{+}$ | 5.0 | 133 | 135 | 40 | 61 | $A^{+++}$ | $A^{+}$ | 5.0 | 190 | 135 | 40 | 61 |
| | EHPX-***D | $A^{++}$ | - | 5.0 | 129 | - | 40 | 61 | $A^{+++}$ | - | 5.0 | 183 | - | 40 | 61 |
| | ERPX-***D | $A^{++}$ | - | 5.0 | 133 | - | 40 | 61 | $A^{+++}$ | - | 5.0 | 190 | - | 40 | 61 |
| PUZ-WM60VAA(-BS) | EHPT17X-***D(W) | $A^{++}$ | $A^{+}$ | 6.0 | 142 | 120 | 40 | 58 | $A^{+++}$ | $A^{+}$ | 6.0 | 190 | 120 | 40 | 58 |
| | ERPT17X-***D(W) | $A^{++}$ | $A^{+}$ | 6.0 | 145 | 120 | 40 | 58 | $A^{+++}$ | $A^{+}$ | 6.0 | 197 | 120 | 40 | 58 |
| | EHPT20X-***D(W) | $A^{++}$ | $A^{+}$ | 6.0 | 142 | 145 | 40 | 58 | $A^{+++}$ | $A^{+}$ | 6.0 | 190 | 145 | 40 | 58 |
| | ERPT20X-***D(W) | $A^{++}$ | $A^{+}$ | 6.0 | 145 | 145 | 40 | 58 | $A^{+++}$ | $A^{+}$ | 6.0 | 197 | 145 | 40 | 58 |
| | EHPX-***D | $A^{++}$ | - | 6.0 | 142 | - | 40 | 58 | $A^{+++}$ | - | 6.0 | 190 | - | 40 | 58 |
| | ERPX-***D | $A^{++}$ | - | 6.0 | 145 | - | 40 | 58 | $A^{+++}$ | - | 6.0 | 197 | - | 40 | 58 |

Note: E**T17/20*-***D use “Load profile L”.
E**T30*-***D use “Load profile XL”.

| Outdoor unit | Indoor unit | For medium-temperature application | | | | | | | For low-temperature application | | | | | | |
|---|---|---|---|---|---|---|---|---|---|---|---|---|---|---|---|
| | | Seasonal space heating energy efficiency class | Water heating energy efficiency class | Rated heat output under average climate conditions | Seasonal space heating energy efficiency under average climate conditions | Water heating energy efficiency under average climate conditions | Sound power level LWA indoor | Sound power level LWA outdoor | Seasonal space heating energy efficiency class | Water heating energy efficiency class | Rated heat output under average climate conditions | Seasonal space heating energy efficiency under average climate conditions | Water heating energy efficiency under average climate conditions | Sound power level LWA indoor | Sound power level LWA outdoor |
| | | | | kW | % | % | dBA | dBA | | | kW | % | % | dBA | dBA |
| PUZ-WM85V/YAA(-BS) | EHPT17X-***D(W) | A++ | A+ | 8.5 | 139/138 | 120 | 40 | 58 | A+++ | A+ | 8.5 | 193/190 | 120 | 40 | 58 |
| | ERPT17X-***D(W) | A++ | A+ | 8.5 | 141/141 | 120 | 40 | 58 | A+++ | A+ | 8.5 | 197/197 | 120 | 40 | 58 |
| | EHPT20X-***D(W) | A++ | A+ | 8.5 | 139/138 | 145 | 40 | 58 | A+++ | A+ | 8.5 | 193/190 | 145 | 40 | 58 |
| | ERPT20X-***D(W) | A++ | A+ | 8.5 | 141/141 | 145 | 40 | 58 | A+++ | A+ | 8.5 | 197/197 | 145 | 40 | 58 |
| | EHPT30X-***D(W) | A++ | A | 8.5 | 139/138 | 120 | 40 | 58 | A+++ | A | 8.5 | 193/190 | 120 | 40 | 58 |
| | ERPT30X-***D(W) | A++ | A | 8.5 | 141/141 | 120 | 40 | 58 | A+++ | A | 8.6 | 197/197 | 120 | 40 | 58 |
| | EHPX-***D | A++ | - | 8.5 | 139/138 | - | 40 | 58 | A+++ | - | 8.5 | 193/190 | - | 40 | 58 |
| | ERPX-***D | A++ | - | 8.5 | 141/141 | - | 40 | 58 | A+++ | - | 8.5 | 197/197 | - | 40 | 58 |
| PUZ-WM112V/YAA(-BS) | EHPT20X-***D(W) | A++ | A+ | 10.0 | 134/133 | 148 | 40 | 60 | A+++ | A+ | 10.0 | 191/189 | 148 | 40 | 60 |
| | ERPT20X-***D(W) | A++ | A+ | 10.0 | 136/136 | 148 | 40 | 60 | A+++ | A+ | 10.0 | 195/195 | 148 | 40 | 60 |
| | EHPT30X-***D(W) | A++ | A | 10.0 | 134/133 | 120 | 40 | 60 | A+++ | A | 10.0 | 191/189 | 120 | 40 | 60 |
| | ERPT30X-***D(W) | A++ | A | 10.0 | 136/136 | 120 | 40 | 60 | A+++ | A | 10.0 | 195/195 | 120 | 40 | 60 |
| | EHPX-***D | A++ | - | 10.0 | 134/133 | - | 40 | 60 | A+++ | - | 10.0 | 191/189 | - | 40 | 60 |
| | ERPX-***D | A++ | - | 10.0 | 136/136 | - | 40 | 60 | A+++ | - | 10.0 | 195/195 | - | 40 | 60 |
| PUZ-HWM140V/YHA(-BS) | EHPT20X-***D(W) | A++ | A+ | 14.0 | 132/131 | 130 | 40 | 67 | A+++ | A+ | 14.0 | 176/175 | 130 | 40 | 67 |
| | ERPT20X-***D(W) | A++ | A+ | 14.0 | 133/133 | 130 | 40 | 67 | A+++ | A+ | 14.0 | 178/177 | 130 | 40 | 67 |
| | EHPT30X-***D(W) | A++ | A | 14.0 | 132/131 | 118 | 40 | 67 | A+++ | A | 14.0 | 176/175 | 118 | 40 | 67 |
| | ERPT30X-***D(W) | A++ | A | 14.0 | 133/133 | 118 | 40 | 67 | A+++ | A | 14.0 | 178/177 | 118 | 40 | 67 |
| | EHPX-***D | A++ | - | 14.0 | 132/131 | - | 40 | 67 | A+++ | - | 14.0 | 176/175 | - | 40 | 67 |
| | ERPX-***D | A++ | - | 14.0 | 133/133 | - | 40 | 67 | A+++ | - | 14.0 | 178/177 | - | 40 | 67 |
| PUHZ-FRP71VHA2 | EHST20C-***D | A+ | A+ | 7.5 | 121 | 138 | 40 | 68 | A++ | A+ | 7.5 | 163 | 138 | 40 | 68 |
| | EHSC-***D | A+ | - | 7.5 | 121 | - | 40 | 68 | A++ | - | 7.5 | 163 | - | 40 | 68 |
| PUMY-P112VKM5/YKM(E)4 | EHST20C-***D | A+ | A | 11.2 | 121 | 106 | 40 | 69 | A++ | A | 11.2 | 168 | 106 | 40 | 69 |
| | EHSC-***D | A+ | - | 11.2 | 121 | - | 40 | 69 | A++ | - | 11.2 | 168 | - | 40 | 69 |
| PUMY-P125VKM5/YKM(E)4 | EHST20C-***D | A+ | A | 11.2 | 121 | 106 | 40 | 69 | A++ | A | 11.2 | 168 | 106 | 40 | 69 |
| | EHSC-***D | A+ | - | 11.2 | 121 | - | 40 | 69 | A++ | - | 11.2 | 168 | - | 40 | 69 |
| PUMY-P140VKM5/YKM(E)4 | EHST20C-***D | A+ | A | 11.2 | 121 | 106 | 40 | 69 | A++ | A | 11.2 | 168 | 106 | 40 | 69 |
| | EHSC-***D | A+ | - | 11.2 | 121 | - | 40 | 69 | A++ | - | 11.2 | 168 | - | 40 | 69 |
| PXZ-4F75VG | E*ST17D-****D | A+ | A+ | 6.1 | 113 | 117 | 41 | 67 | A++ | A+ | 6.1 | 154 | 117 | 41 | 67 |
| | E*ST20D-****D | A+ | A+ | 6.1 | 113 | 124 | 41 | 67 | A++ | A+ | 6.1 | 154 | 124 | 41 | 67 |
| | E*ST30D-****D | A+ | A | 6.1 | 113 | 118 | 41 | 67 | A++ | A | 6.1 | 154 | 118 | 41 | 67 |
| | E*SD-****D | A+ | - | 6.1 | 113 | - | 41 | 67 | A++ | - | 6.1 | 154 | - | 41 | 67 |
| PXZ-5F85VG | E*ST17D-****D | A+ | A+ | 6.7 | 111 | 121 | 41 | 64 | A++ | A+ | 6.8 | 157 | 121 | 41 | 64 |
| | E*ST20D-****D | A+ | A+ | 6.7 | 111 | 123 | 41 | 64 | A++ | A+ | 6.8 | 157 | 123 | 41 | 64 |
| | E*ST30D-****D | A+ | A | 6.7 | 111 | 110 | 41 | 64 | A++ | A | 6.8 | 157 | 110 | 41 | 64 |
| | E*SD-****D | A+ | - | 6.7 | 111 | - | 41 | 64 | A++ | - | 6.8 | 157 | - | 41 | 64 |

Note: E**T17/20*-***D use “Load profile L”.
E**T30*-***D use “Load profile XL”.

## 1.3 Maximum outlet water temperature

### (1) Packaged-type units

**PUZ-WM50VHA(-BS)**

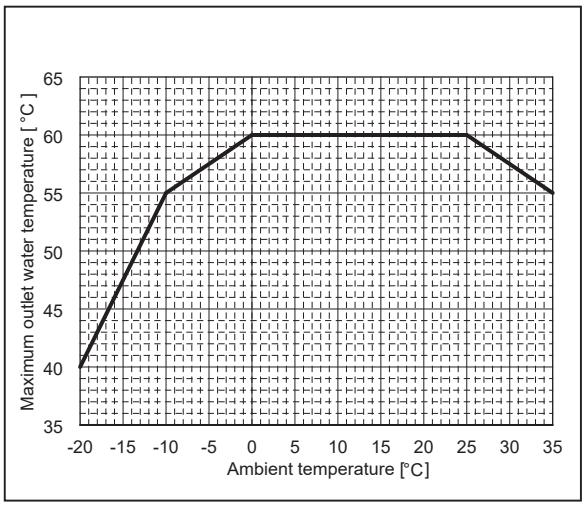


**PUZ-WM60VAA(-BS)**
**PUZ-WM85VAA(-BS)**
**PUZ-WM85YAA(-BS)**

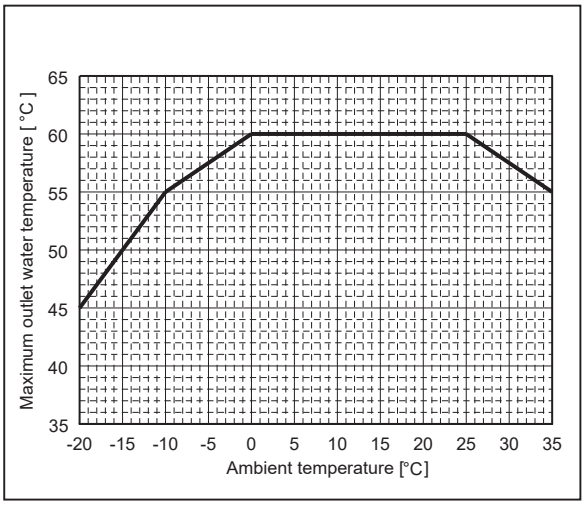


**PUZ-WM112VAA(-BS)**
**PUZ-WM112YAA(-BS)**

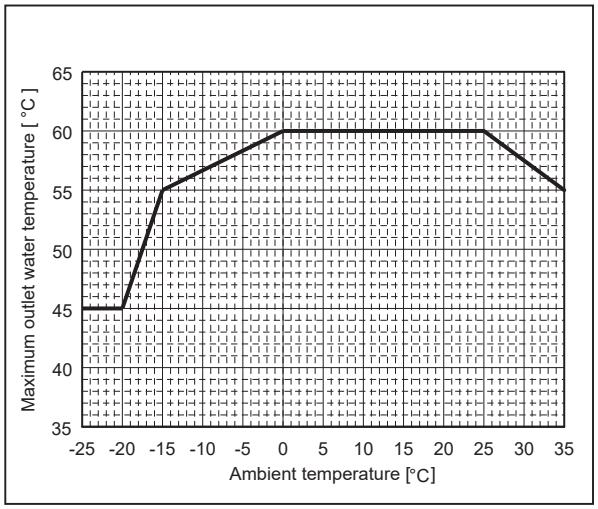


**PUZ-HWM140VHA(-BS)**
**PUZ-HWM140YHA(-BS)**

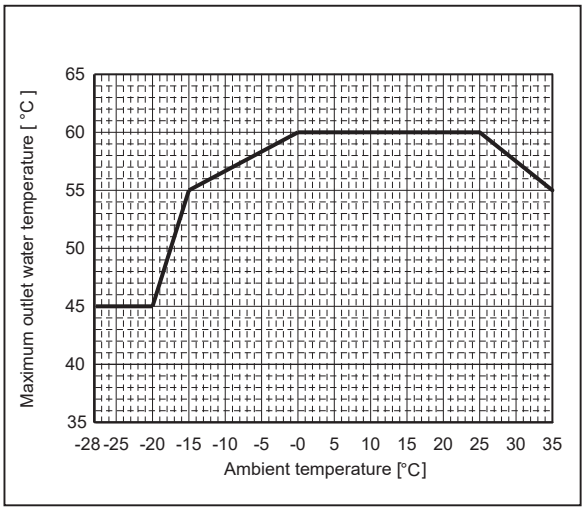

## (2) Split-type units

**SUZ-SWM40VA**
**SUZ-SWM60VA**
**SUZ-SWM80VA**

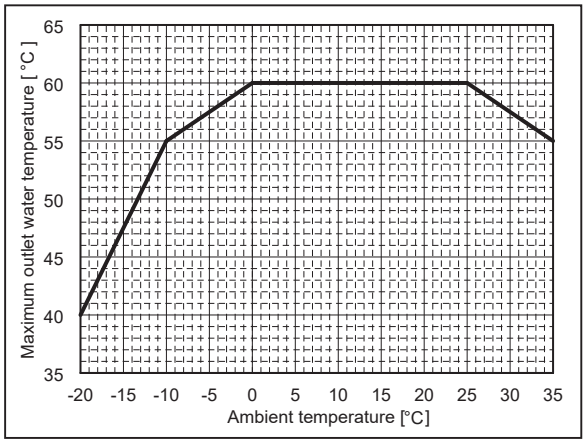


**SUZ-SWM30VA**
**SUZ-SHWM30VAH**

**SUZ-SWM40VA2(-SC)**
**SUZ-SHWM40VAH(-SC)**
**SUZ-SWM60VA2(-SC)**

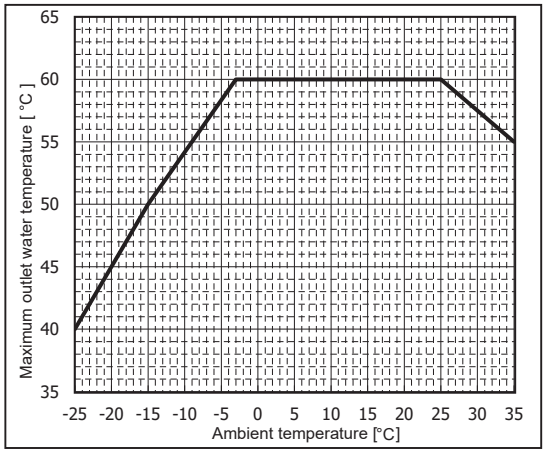


**SUZ-SHWM60VAH(-SC)**
**SUZ-SWM80VA2**
**SUZ-SWM80VAH2**

**SUZ-SWM100VA**
**SUZ-SWM100VAH**

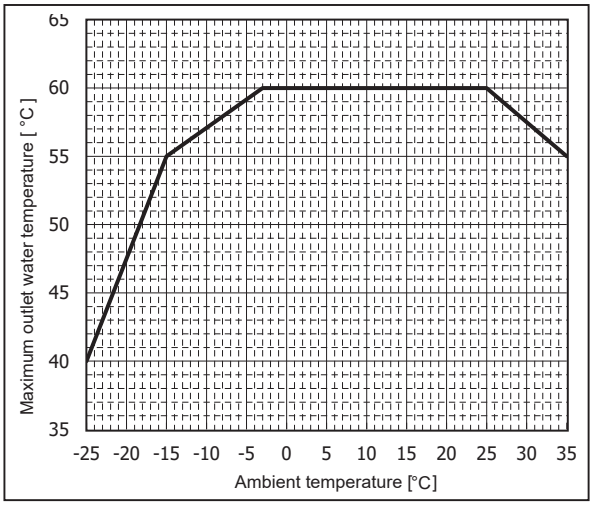


**PUZ-SWM60VAA**
**PUZ-SWM80VAA**
**PUZ-SWM80YAA**
**PUZ-SWM100VAA**
**PUZ-SWM100YAA**

**PUZ-SWM120VAA**
**PUZ-SWM120YAA**
**PUZ-SWM140VAA**
**PUZ-SWM140YAA**

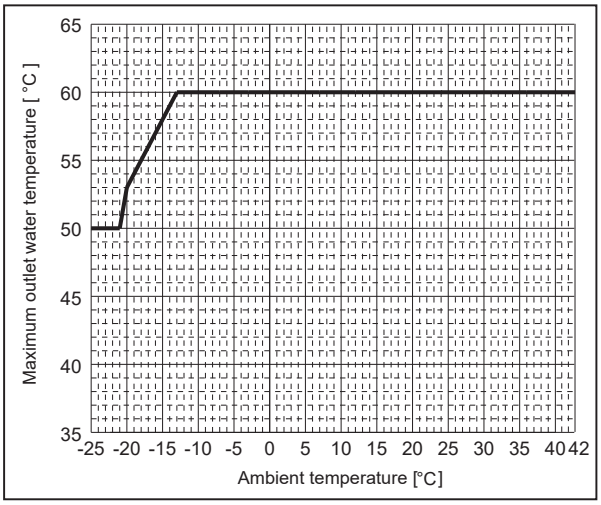


**PUZ-SHWM60VAA**
**PUZ-SHWM80VAA**
**PUZ-SHWM80YAA**
**PUZ-SHWM100VAA**
**PUZ-SHWM100YAA**

**PUZ-SHWM120VAA**
**PUZ-SHWM120YAA**
**PUZ-SHWM140VAA**
**PUZ-SHWM140YAA**

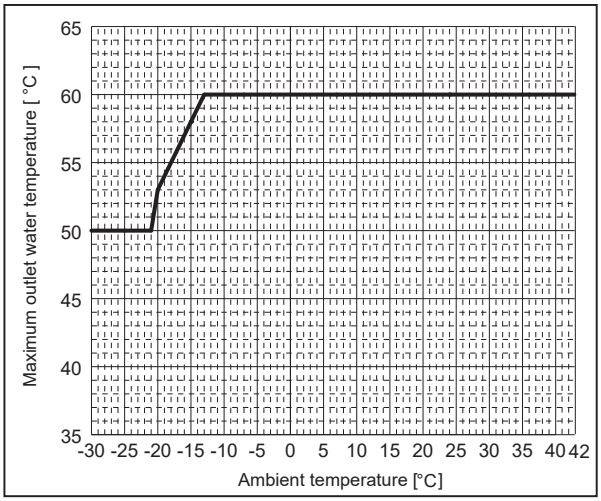

**PUD-SWM60VAA(-BS) PUD-SWM100VAA(-BS)**
**PUD-SWM80VAA(-BS) PUD-SWM100YAA(-BS)**
**PUD-SWM80YAA(-BS) PUD-SWM120VAA(-BS)**
**PUD-SWM120YAA(-BS)**

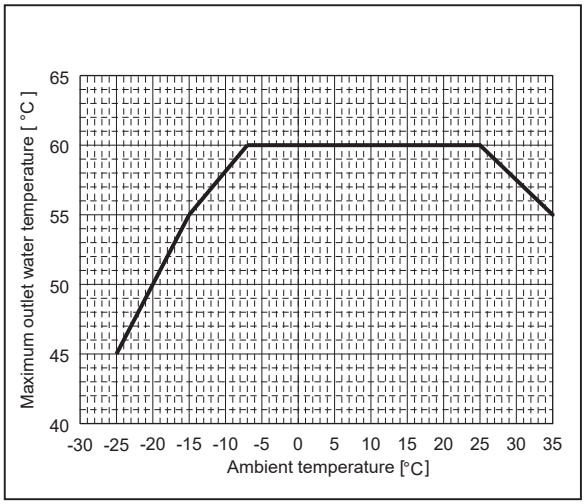


**PUD-SHWM60VAA(-BS) PUD-SHWM120VAA(-BS)**
**PUD-SHWM80VAA(-BS) PUD-SHWM120YAA(-BS)**
**PUD-SHWM80YAA(-BS) PUD-SHWM140VAA(-BS)**
**PUD-SHWM100VAA(-BS) PUD-SHWM140YAA(-BS)**
**PUD-SHWM100YAA(-BS)**

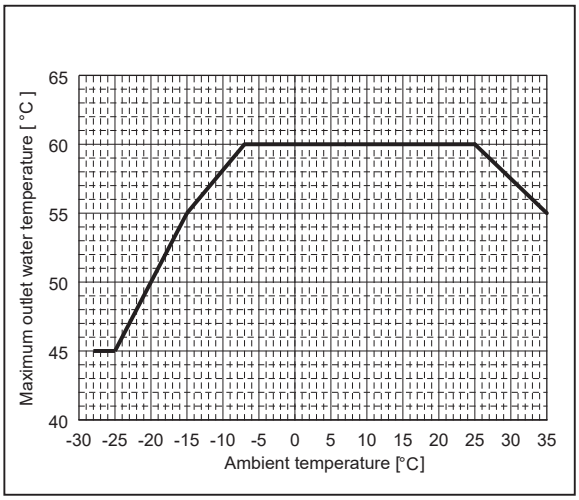


**PXZ-4F75VG**
**PXZ-5F85VG**

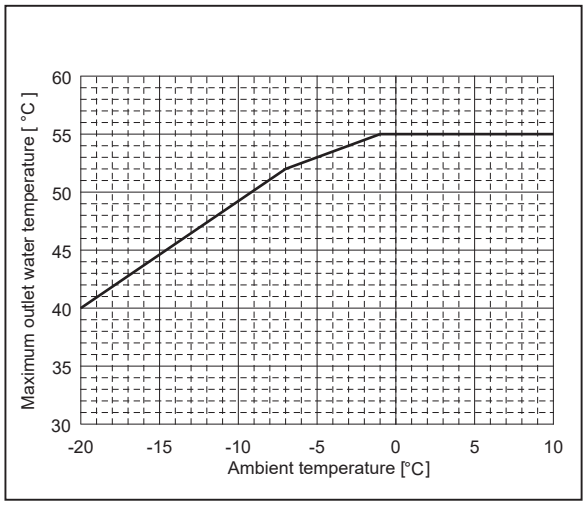

## 1.4 Available range (Water flow rate, return water temp.)

### (1) Packaged-type units

■ **Heating**

**PUZ-WM50VHA(-BS)**

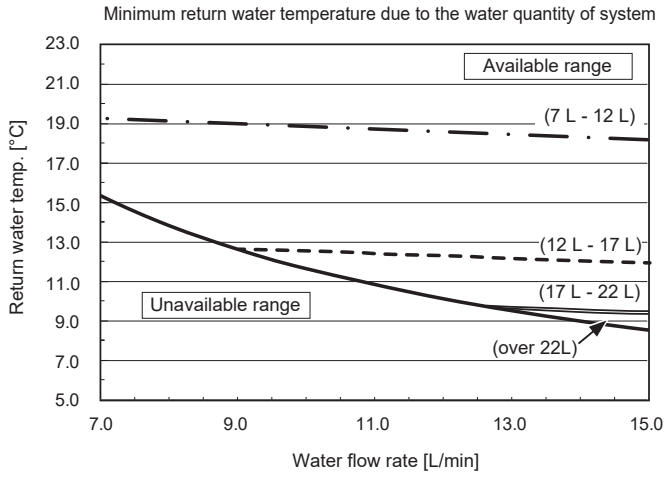


**PUZ-WM60VAA(-BS) PUZ-WM85VAA(-BS) PUZ-WM85YAA(-BS)**

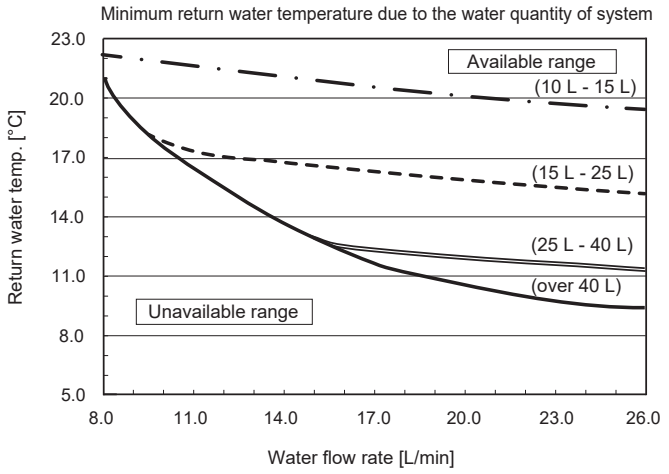


**PUZ-WM112VAA(-BS) PUZ-WM112YAA(-BS)**

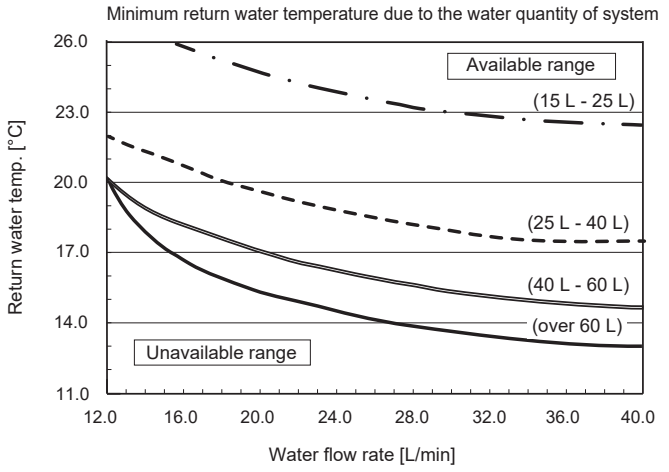


**Note:**
**Be sure to avoid the unavailable range during defrosting.**
**Otherwise, the outdoor unit is insufficiently defrosted and/or the heat exchanger of the indoor unit may freeze.**

**PUZ-HWM140VHA(-BS) PUZ-HWM140YHA(-BS)**

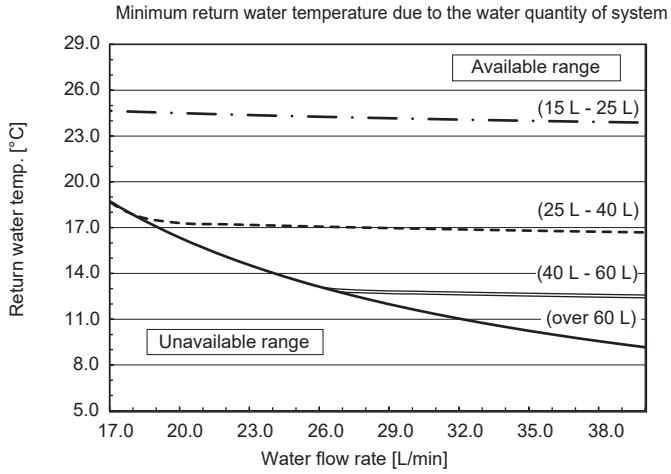

## ■ Cooling

### PUZ-WM50VHA(-BS)

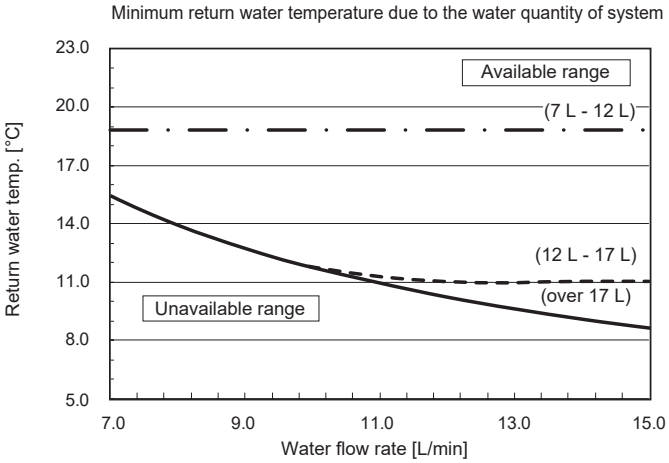


### PUZ-WM60VAA(-BS) PUZ-WM85VAA(-BS) PUZ-WM85YAA(-BS)

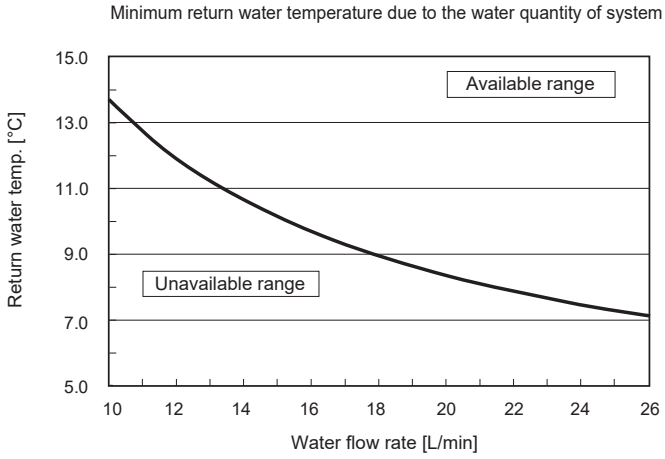


### PUZ-WM112VAA(-BS) PUZ-WM112YAA(-BS)

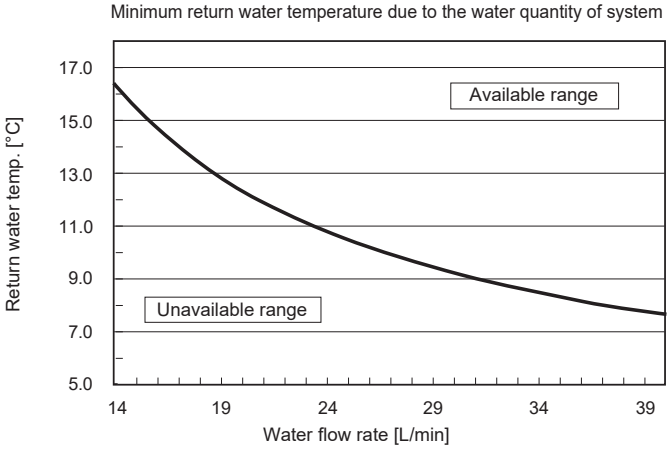


**Note:**
**Be sure to avoid the unavailable range during defrosting.**
**Otherwise, the outdoor unit is insufficiently defrosted and/or the heat exchanger of the indoor unit may freeze.**

### PUZ-HWM140VHA(-BS) PUZ-HWM140YHA(-BS)

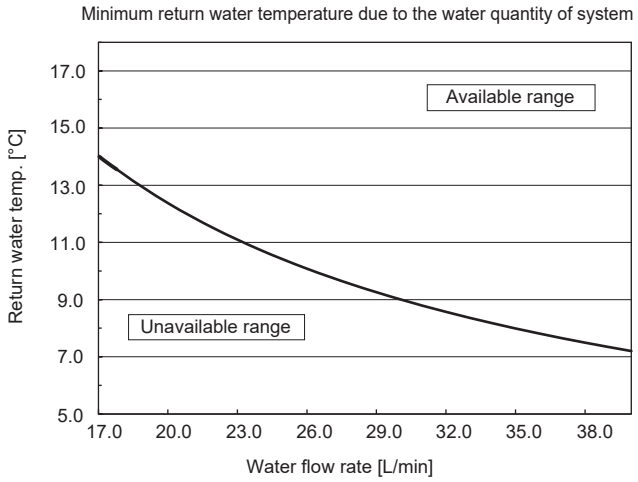

## (2) Split-type units

### ■ Heating

**SUZ-SWM40VA**

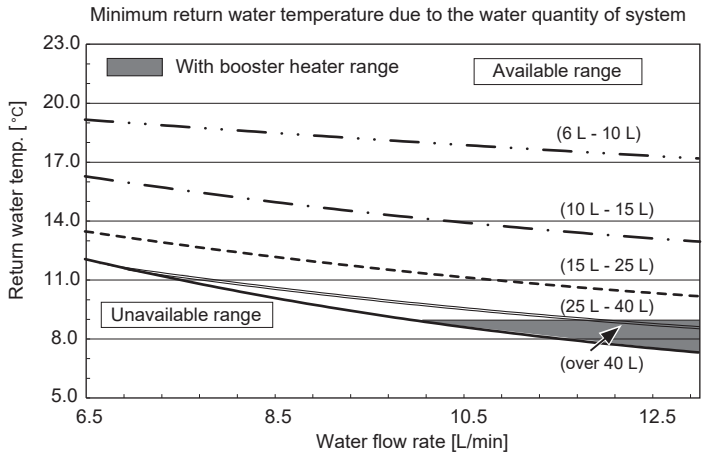


**SUZ-SWM60VA**

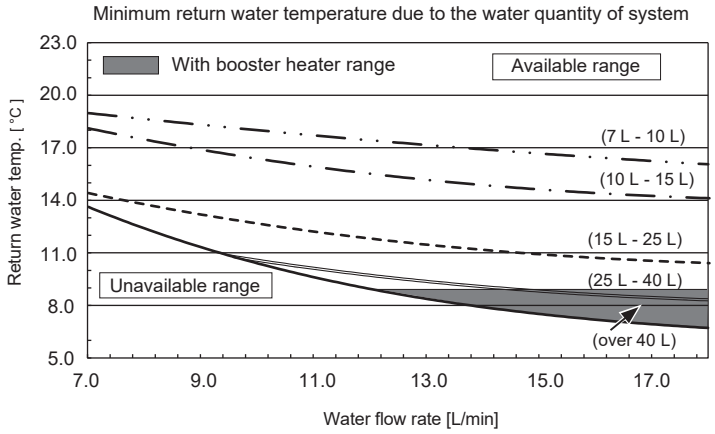


**SUZ-SWM80VA**

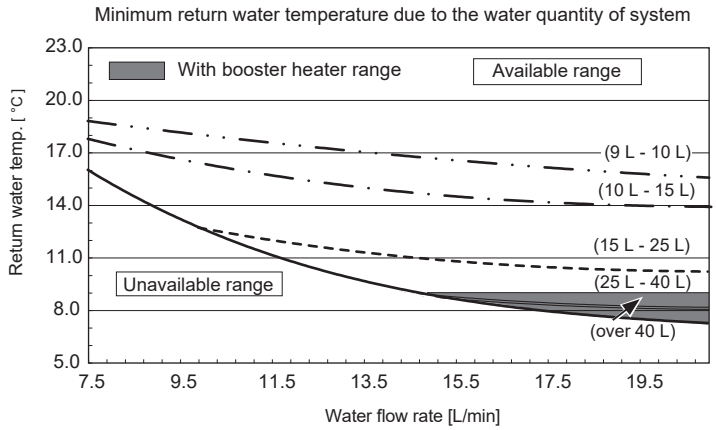


**Note:**
**Be sure to avoid the unavailable range during defrosting.**
**Otherwise, the outdoor unit is insufficiently defrosted and/or the heat exchanger of the indoor unit may freeze.**

**SUZ-SWM30VA** **SUZ-SHWM30VAH**
**SUZ-SWM40VA2** **SUZ-SHWM40VAH**
**SUZ-SWM60VA2**

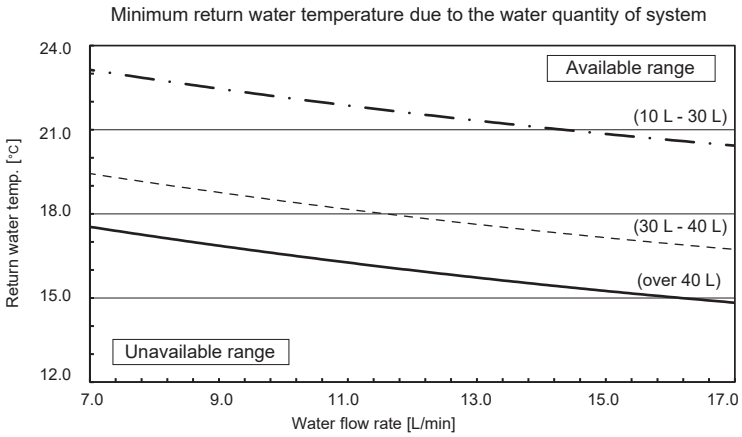


**SUZ-SWM80VA(H)2**
**SUZ-SWM100VA(H)**
**SUZ-SHWM60VAH**

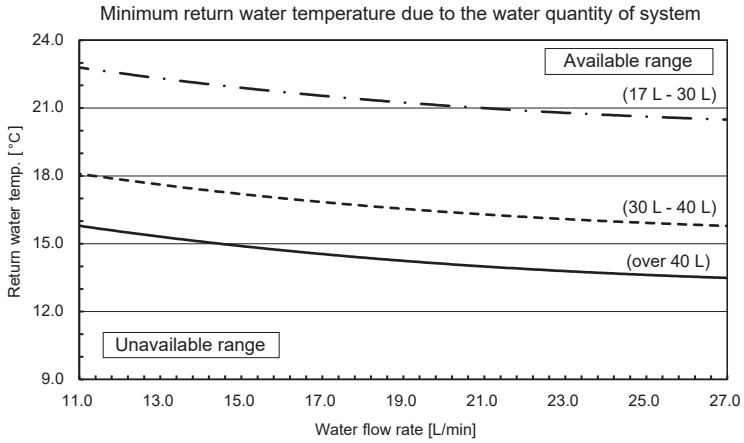


**Note:**
**Be sure to avoid the unavailable range during defrosting.**
**Otherwise, the outdoor unit is insufficiently defrosted and/or the heat exchanger of the indoor unit may freeze.**

**PUZ-SWM60VAA PUZ-SWM80VAA PUZ-SWM80YAA PUZ-SWM100VAA PUZ-SWM100YAA**
**PUZ-SHWM60VAA PUZ-SHWM80VAA PUZ-SHWM80YAA PUZ-SHWM100VAA PUZ-SHWM100YAA**

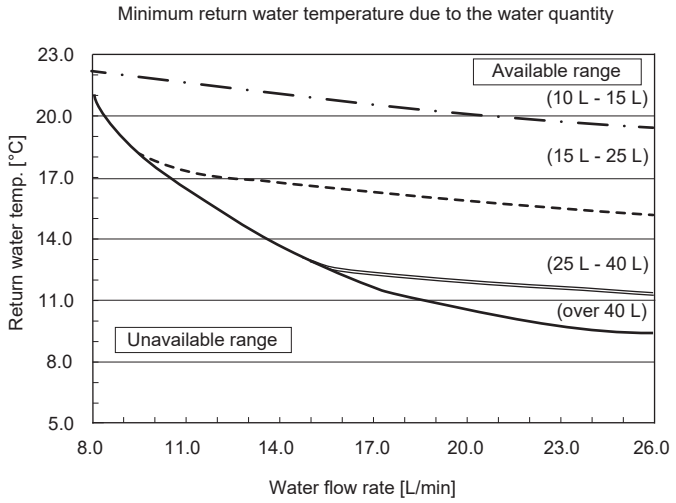


**PUZ-SWM120VAA PUZ-SWM120YAA PUZ-SWM140VAA PUZ-SWM140YAA**
**PUZ-SHWM120VAA PUZ-SHWM120YAA PUZ-SHWM140VAA PUZ-SHWM140YAA**

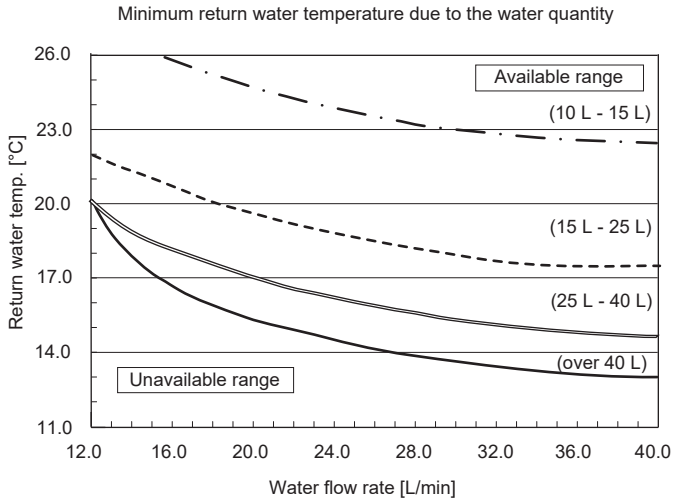


**Note:**
**Be sure to avoid the unavailable range during defrosting.**
**Otherwise, the outdoor unit is insufficiently defrosted and/or the heat exchanger of the indoor unit may freeze.**

## ■ Cooling

### SUZ-SWM40VA

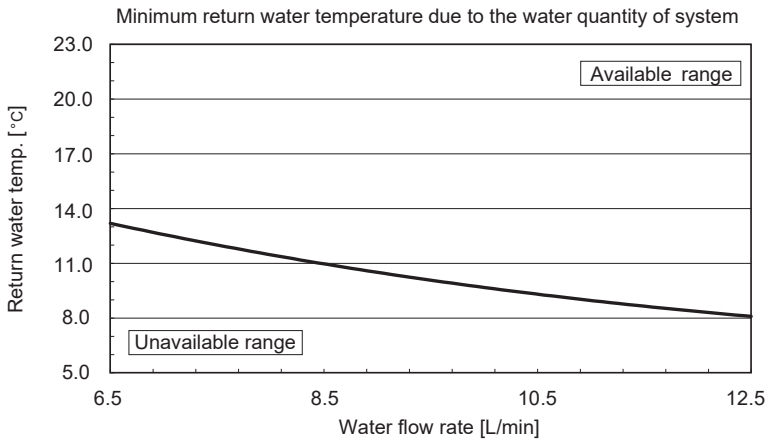


### SUZ-SWM60VA

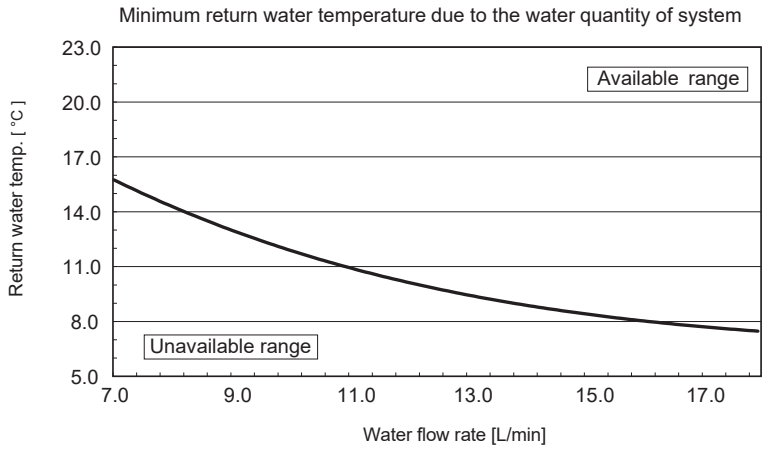


### SUZ-SWM80VA

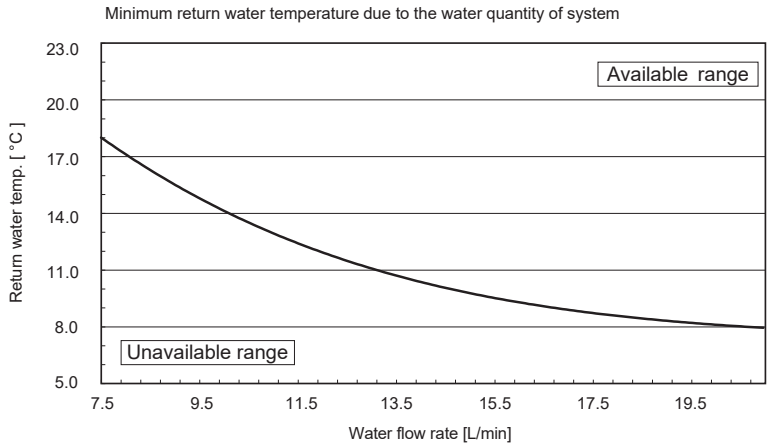


**Note:**
**Be sure to avoid the unavailable range during defrosting.**
**Otherwise, the outdoor unit is insufficiently defrosted and/or the heat exchanger of the indoor unit may freeze.**

**SUZ-SWM30VA SUZ-SHWM30VAH**
**SUZ-SWM40VA2 SUZ-SHWM40VAH**
**SUZ-SWM60VA2**

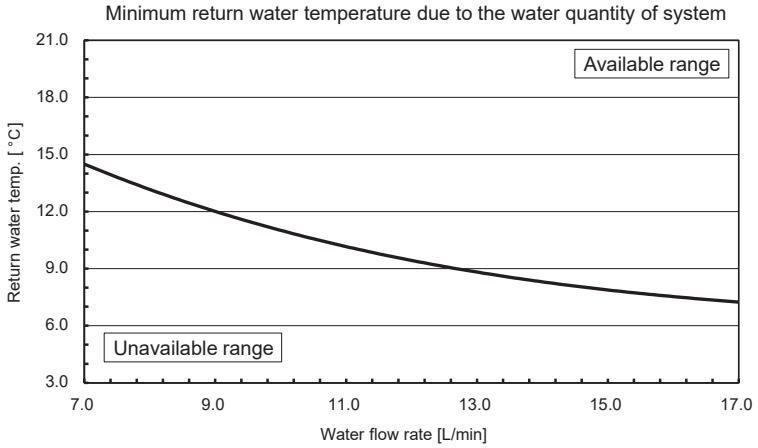


**SUZ-SWM80VA(H)2**
**SUZ-SWM100VA(H)**
**SUZ-SHWM60VAH**

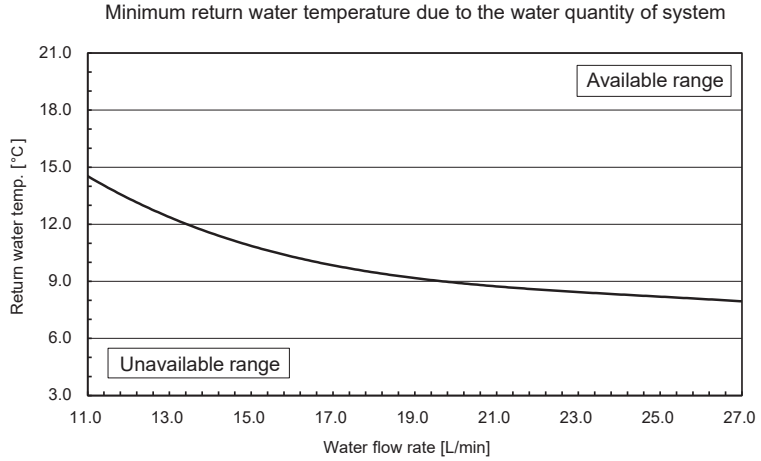


**Note:**
**Be sure to avoid the unavailable range during defrosting.**
**Otherwise, the outdoor unit is insufficiently defrosted and/or the heat exchanger of the indoor unit may freeze.**

**PUZ-SWM60VAA PUZ-SWM80VAA PUZ-SWM80YAA PUZ-SWM100VAA PUZ-SWM100YAA**
**PUZ-SHWM60VAA PUZ-SHWM80VAA PUZ-SHWM80YAA PUZ-SHWM100VAA PUZ-SHWM100YAA**

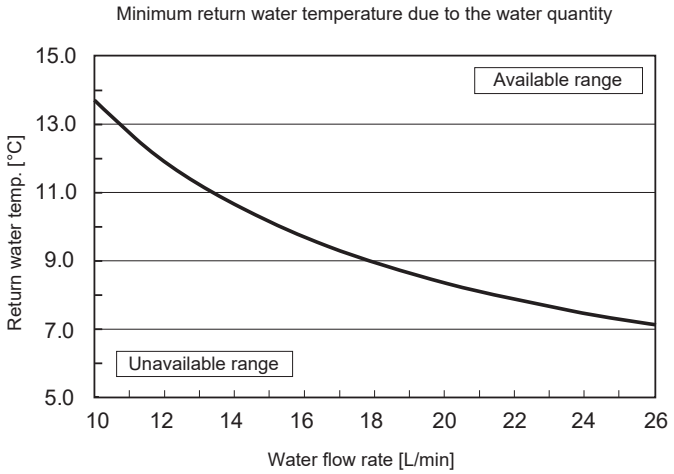


**PUZ-SWM120VAA PUZ-SWM120YAA PUZ-SWM140VAA PUZ-SWM140YAA**
**PUZ-SHWM120VAA PUZ-SHWM120YAA PUZ-SHWM140VAA PUZ-SHWM140YAA**

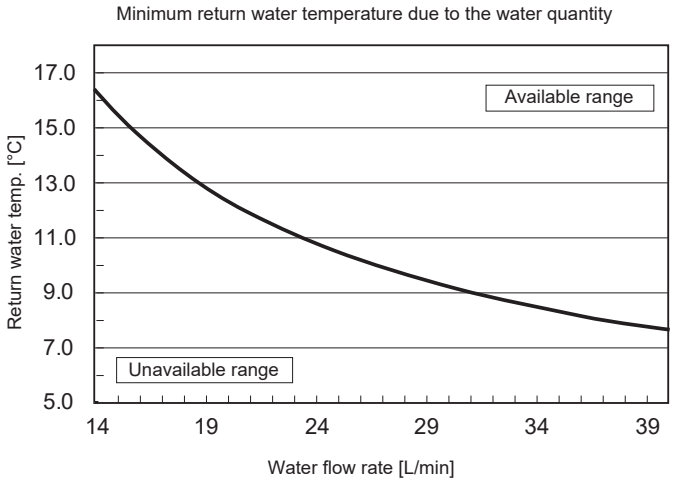


**Note:**
**Be sure to avoid the unavailable range during defrosting.**
**Otherwise, the outdoor unit is insufficiently defrosted and/or the heat exchanger of the indoor unit may freeze.**

**PUD-SWM60VAA(-BS)**
**PUD-SHWM60VAA(-BS)**

**PUD-SWM80VAA(-BS)**
**PUD-SHWM80VAA(-BS)**

**PUD-SWM80YAA(-BS)**
**PUD-SHWM80YAA(-BS)**

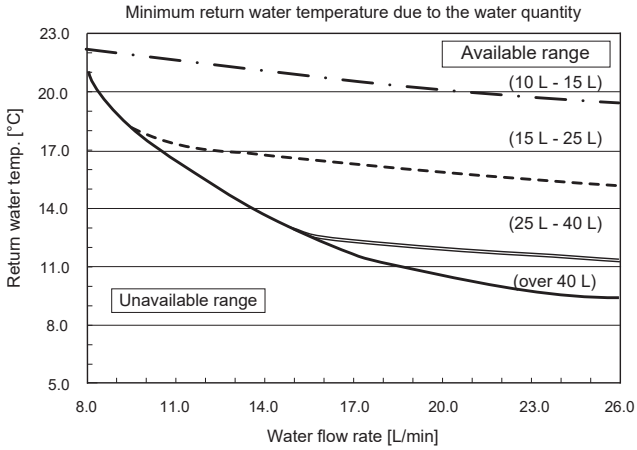


**PUD-SWM100VAA(-BS)**
**PUD-SHWM100VAA(-BS)**
**PUD-SHWM140VAA(-BS)**

**PUD-SWM100YAA(-BS)**
**PUD-SHWM100YAA(-BS)**
**PUD-SHWM140YAA(-BS)**

**PUD-SWM120VAA(-BS)**
**PUD-SHWM120VAA(-BS)**

**PUD-SWM120YAA(-BS)**
**PUD-SHWM120YAA(-BS)**

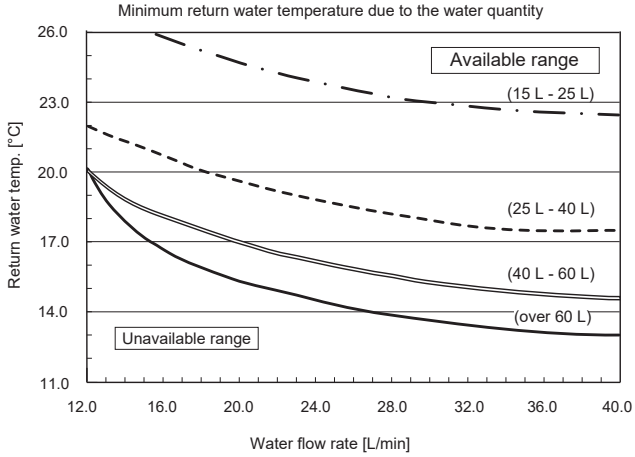


**Note:**
**Be sure to avoid the unavailable range during defrosting.**
**Otherwise, the outdoor unit is insufficiently defrosted and/or the heat exchanger of the indoor unit may freeze.**

**PXZ-4F75VG**

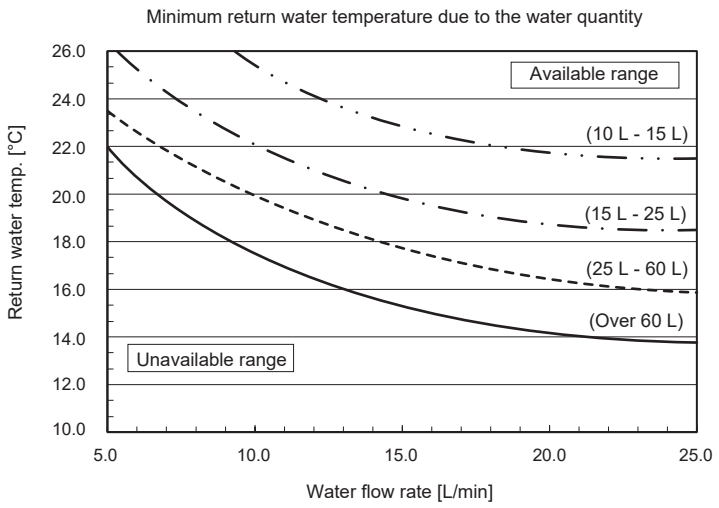


**PXZ-5F85VG**

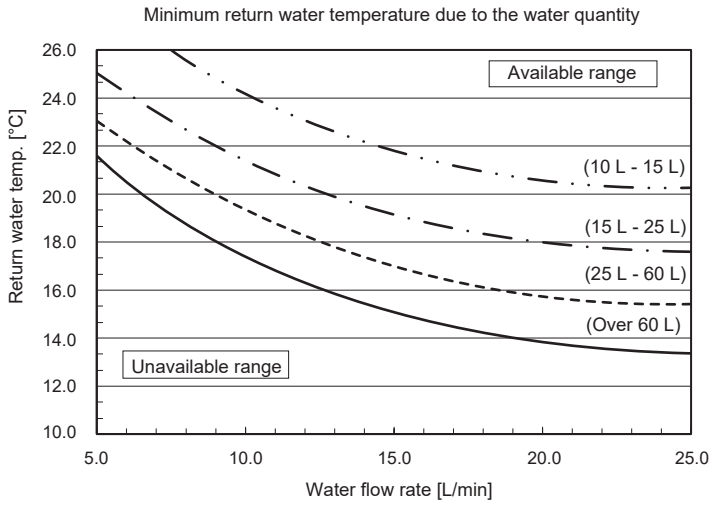


**Note:**
**Be sure to avoid the unavailable range during defrosting.**
**Otherwise, the outdoor unit is insufficiently defrosted and/or the heat exchanger of the indoor unit may freeze.**

## (1)Packaged-type units

■ **PUZ-WM50VHA**
**PUZ-WM50VHA-BS**

**Unit : mm**

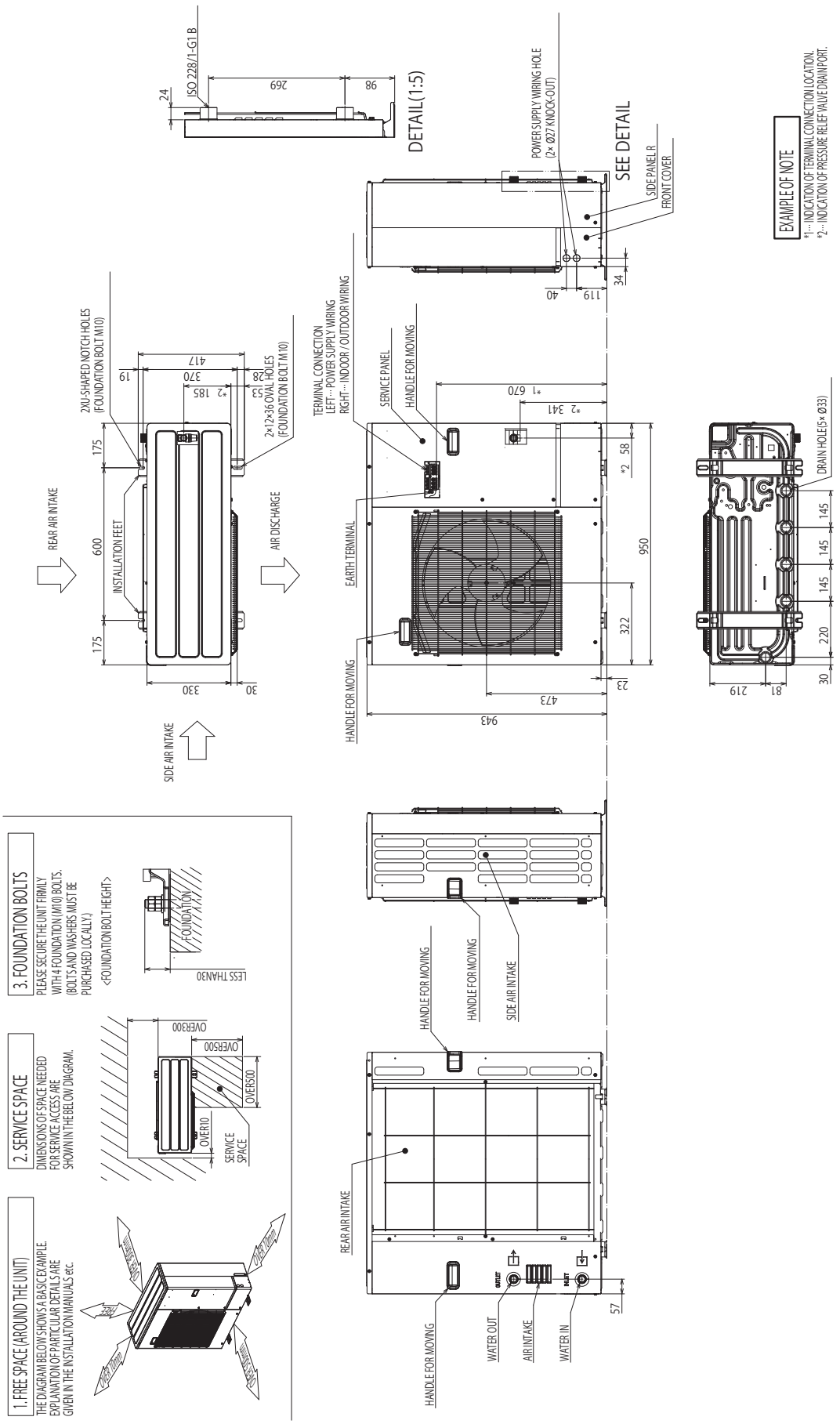

■ **PUZ-WM60VAA(-BS)**
**PUZ-WM85VAA(-BS)**
**PUZ-WM85YAA(-BS)**
**PUZ-WM112VAA(-BS)**
**PUZ-WM112YAA(-BS)**

**Unit : mm**

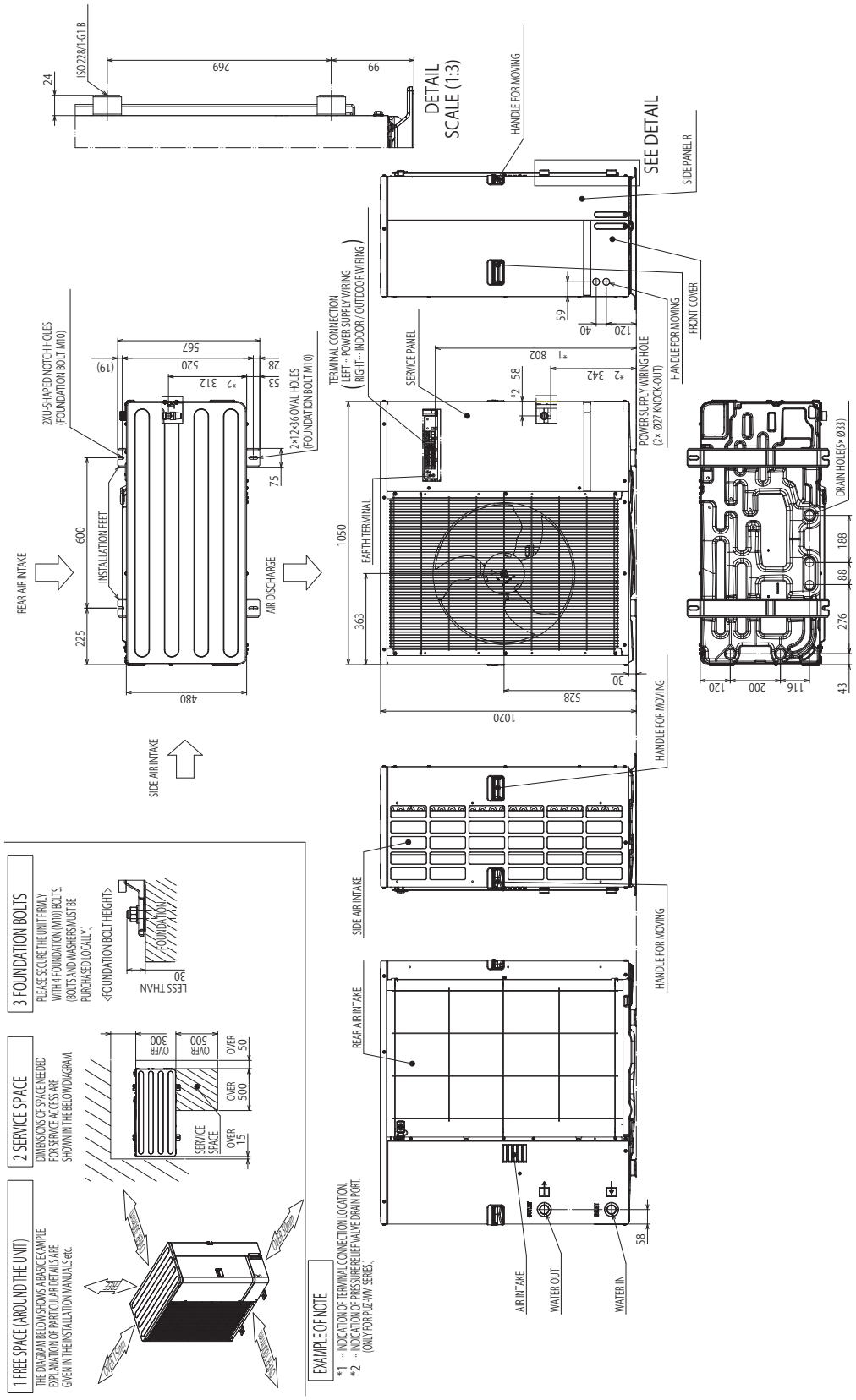

■ **PUZ-HWM140VHA(-BS)**
**PUZ-HWM140YHA(-BS)**

**Unit : mm**

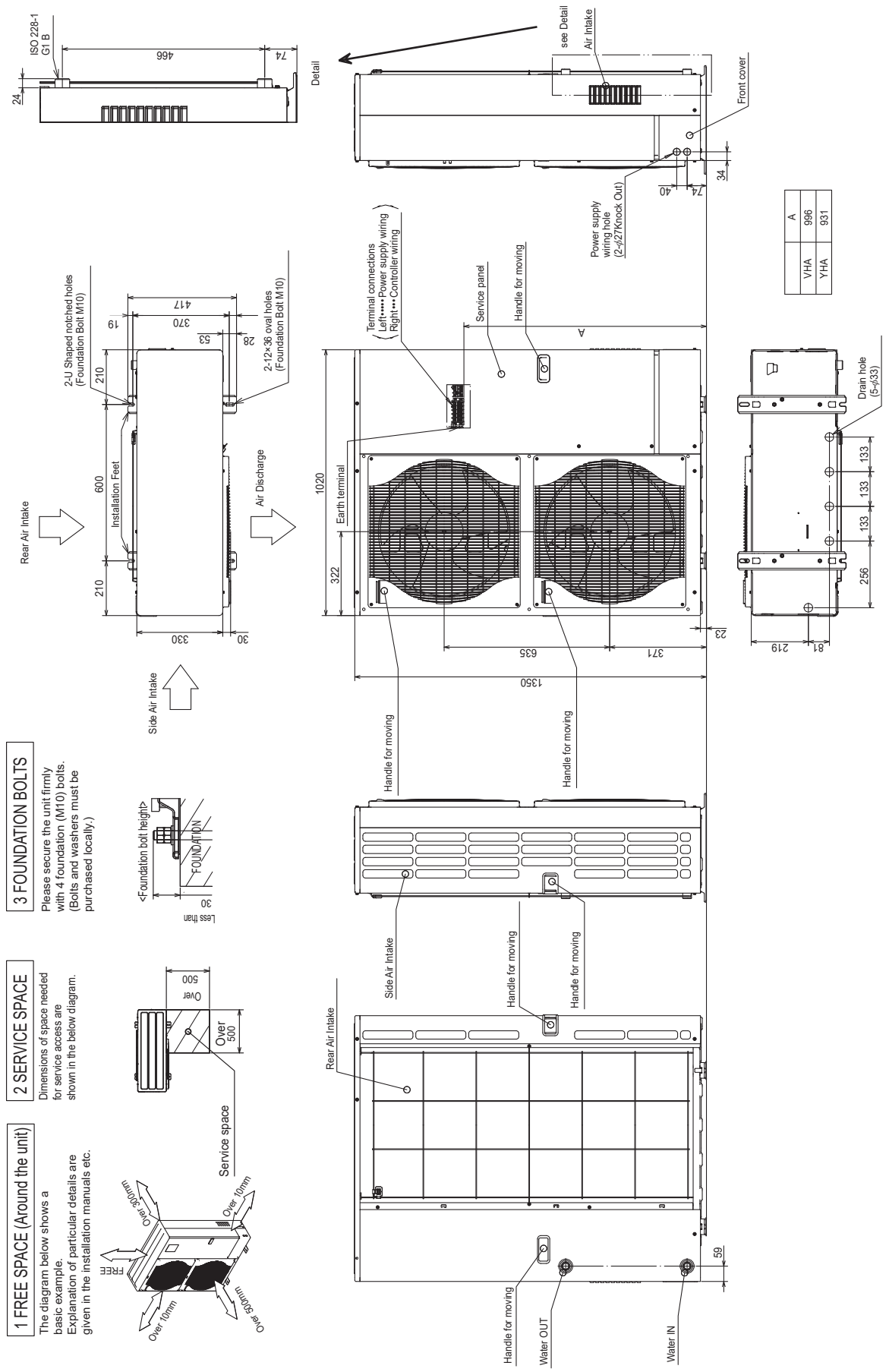


| | A |
|---|---|
| VHA | 996 |
| YHA | 931 |

## (2)Split-type units

Unit : mm

■ **SUZ-SWM40VA**
**SUZ-SWM60VA**
**SUZ-SWM80VA**

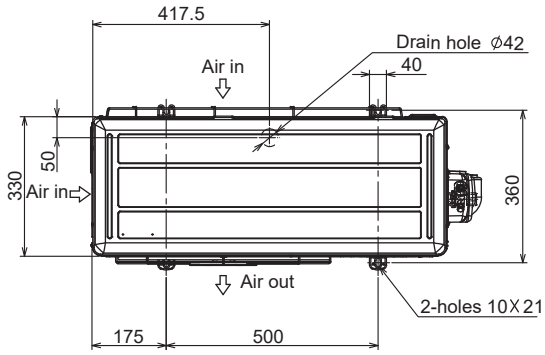


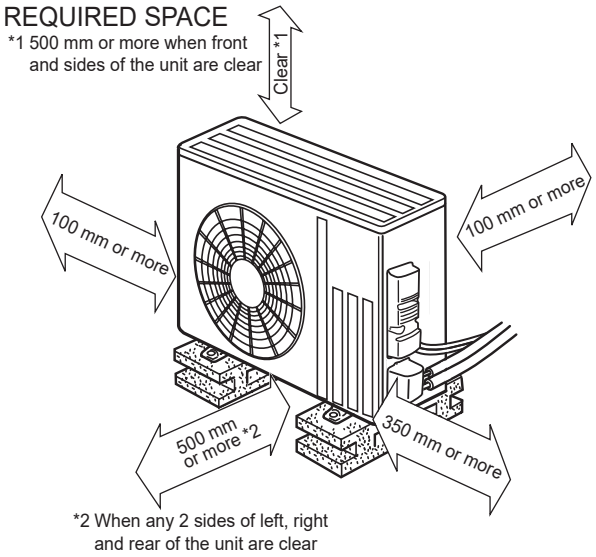


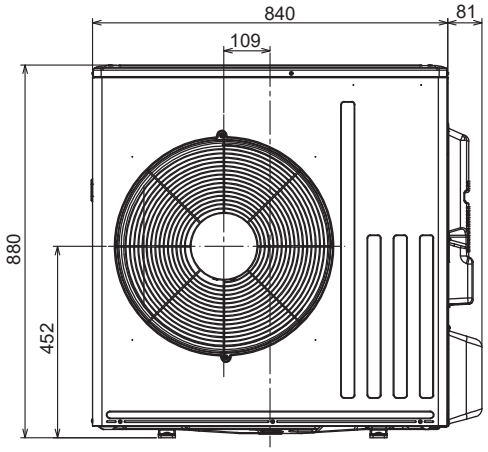


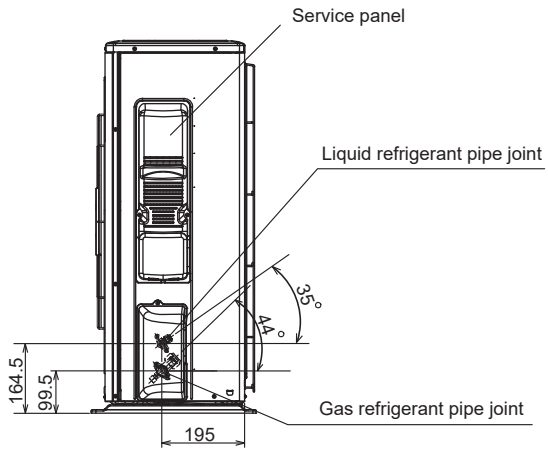


mm (inch)

| MODEL NAME | | SUZ-SWM40/60/80VA |
|---|---|---|
| REFRIGERANT PIPE JOINT | LIQUID REFRIGERANT PIPE | FLARED 6.35 (1/4") |
| | GAS REFRIGERANT PIPE | FLARED 12.7(1/2") |

Unit : mm

■ **SUZ-SWM30VA**
**SUZ-SHWM30VAH**
**SUZ-SWM40VA2**
**SUZ-SWM40VA2-SC**
**SUZ-SHWM40VAH**
**SUZ-SHWM40VAH-SC**
**SUZ-SWM60VA2**
**SUZ-SWM60VA2-SC**

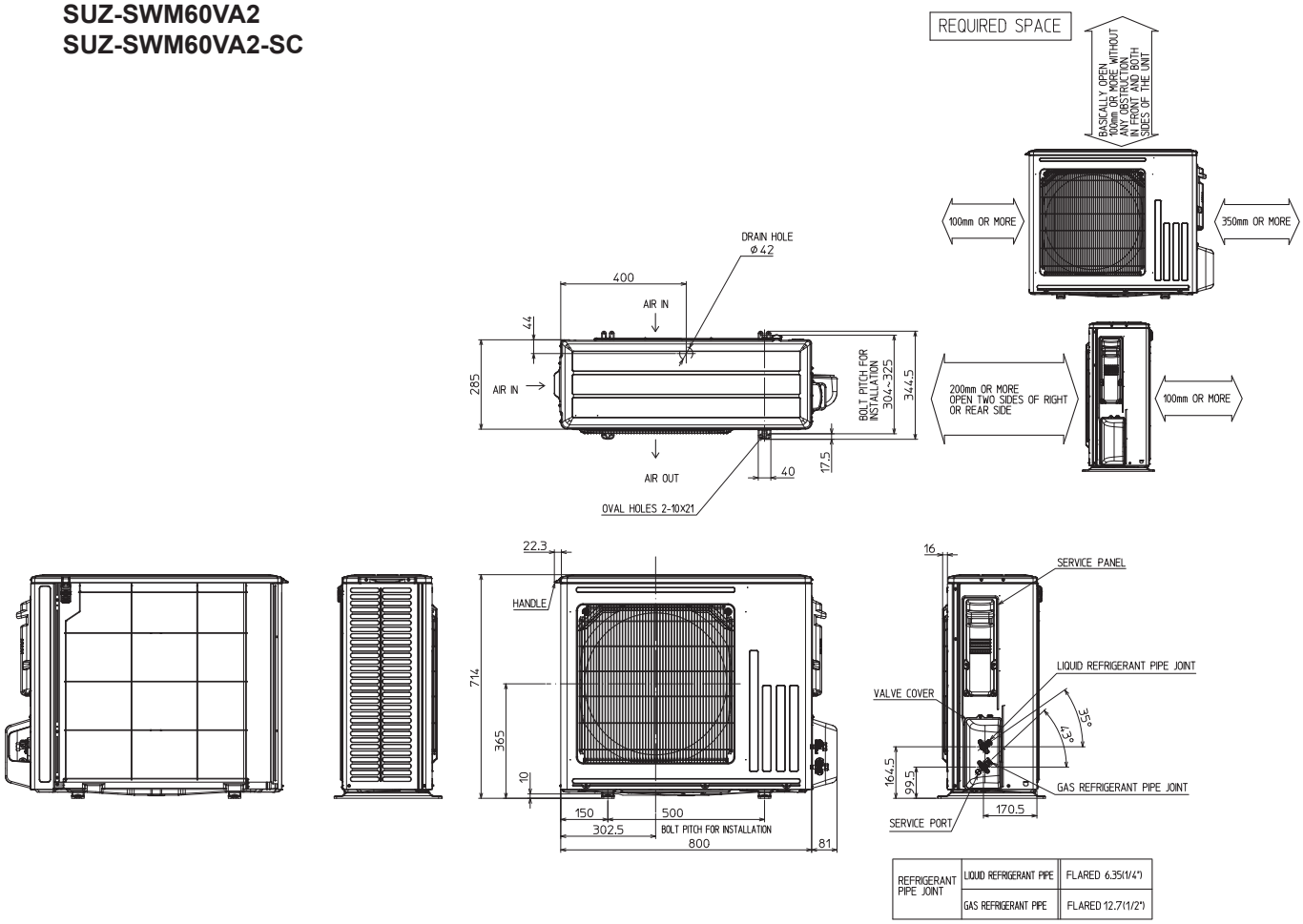


| | | |
|---|---|---|
| REFRIGERANT PIPE JOINT | LIQUID REFRIGERANT PIPE | FLARED 6.35(1/4") |
| | GAS REFRIGERANT PIPE | FLARED 12.7(1/2") |

■ **SUZ-SHWM60VAH**
**SUZ-SHWM60VAH-SC**
**SUZ-SWM80VA2**
**SUZ-SWM80VAH2**
**SUZ-SWM100VA**
**SUZ-SWM100VAH**

**Unit : mm**

REQUIRED SPACE

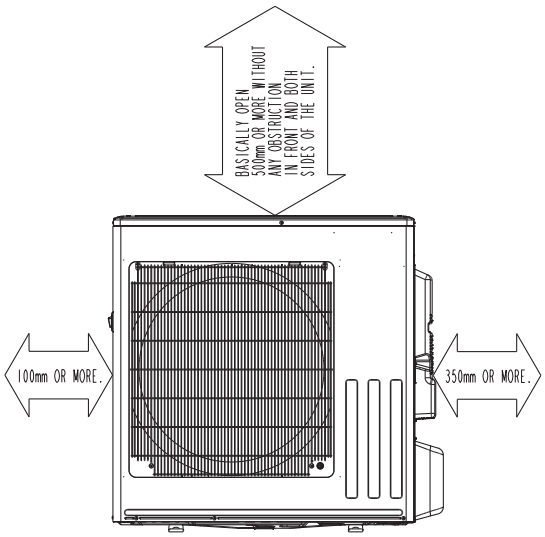


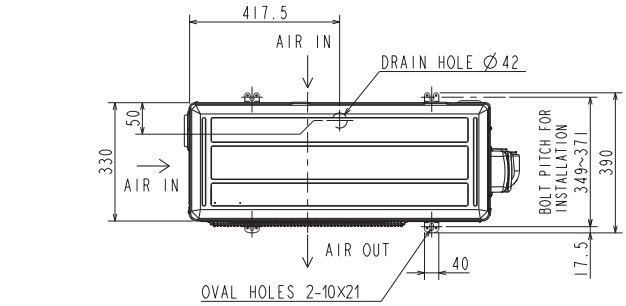


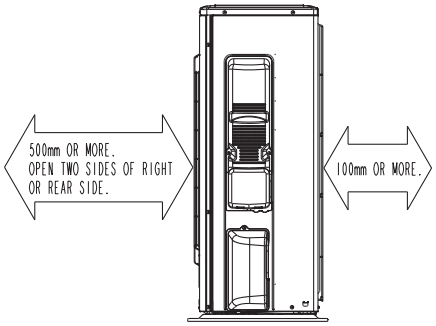


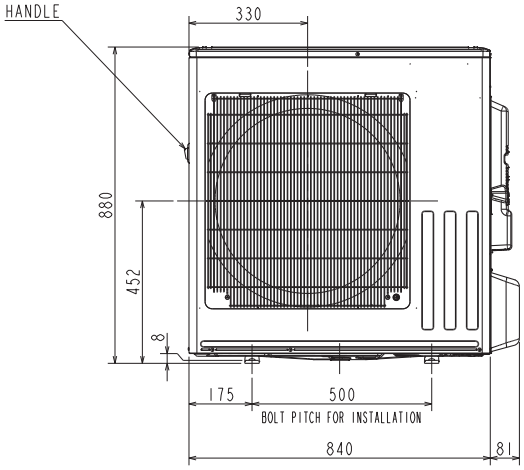


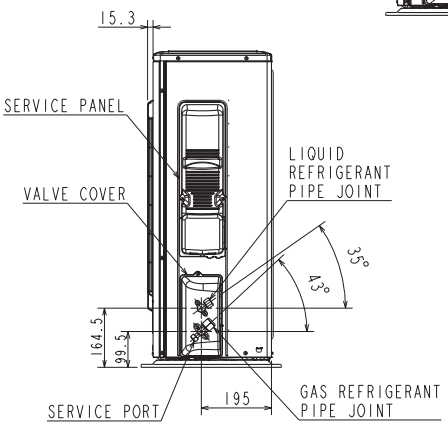


| | | |
|---|---|---|
| REFRIGERANT PIPE JOINT | LIQUID REFRIGERANT PIPE | FLARED ø6.35 (1/4") |
| | GAS REFRIGERANT PIPE | FLARED ø12.7 (1/2") |

■ **PUZ-SWM60VAA**
**PUZ-SWM80VAA**
**PUZ-SWM80YAA**
**PUZ-SWM100VAA**
**PUZ-SWM100YAA**
**PUZ-SWM120VAA**
**PUZ-SWM120YAA**
**PUZ-SWM140VAA**
**PUZ-SWM140YAA**
**PUZ-SHWM60VAA**
**PUZ-SHWM80VAA**
**PUZ-SHWM80YAA**
**PUZ-SHWM80YAA**
**PUZ-SHWM100VAA**
**PUZ-SHWM100YAA**
**PUZ-SHWM120VAA**
**PUZ-SHWM120YAA**
**PUZ-SHWM140VAA**
**PUZ-SHWM140YAA**

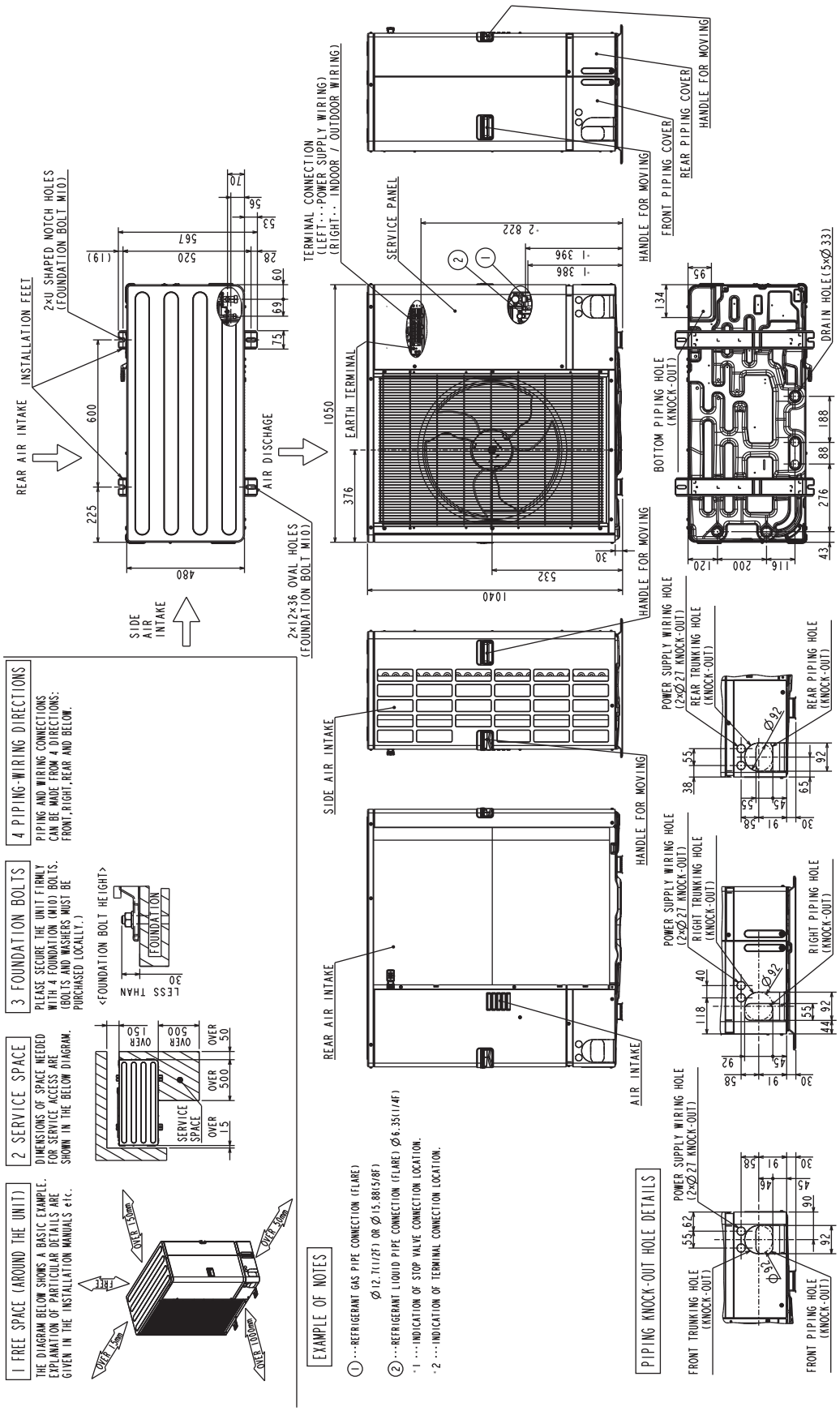

■ **PUD-SWM60VAA(-BS)**
**PUD-SWM100YAA(-BS)**
**PUD-SHWM80VAA(-BS)**
**PUD-SHWM120VAA(-BS)**

**PUD-SWM80VAA(-BS)**
**PUD-SWM120VAA(-BS)**
**PUD-SHWM80YAA(-BS)**
**PUD-SHWM120YAA(-BS)**

**PUD-SWM80YAA(-BS)**
**PUD-SWM120YAA(-BS)**
**PUD-SHWM100VAA(-BS)**
**PUD-SHWM140VAA(-BS)**

**PUD-SWM100VAA(-BS)**
**PUD-SHWM60VAA(-BS)**
**PUD-SHWM100YAA(-BS)**
**PUD-SHWM140YAA(-BS)**

**Unit: mm**

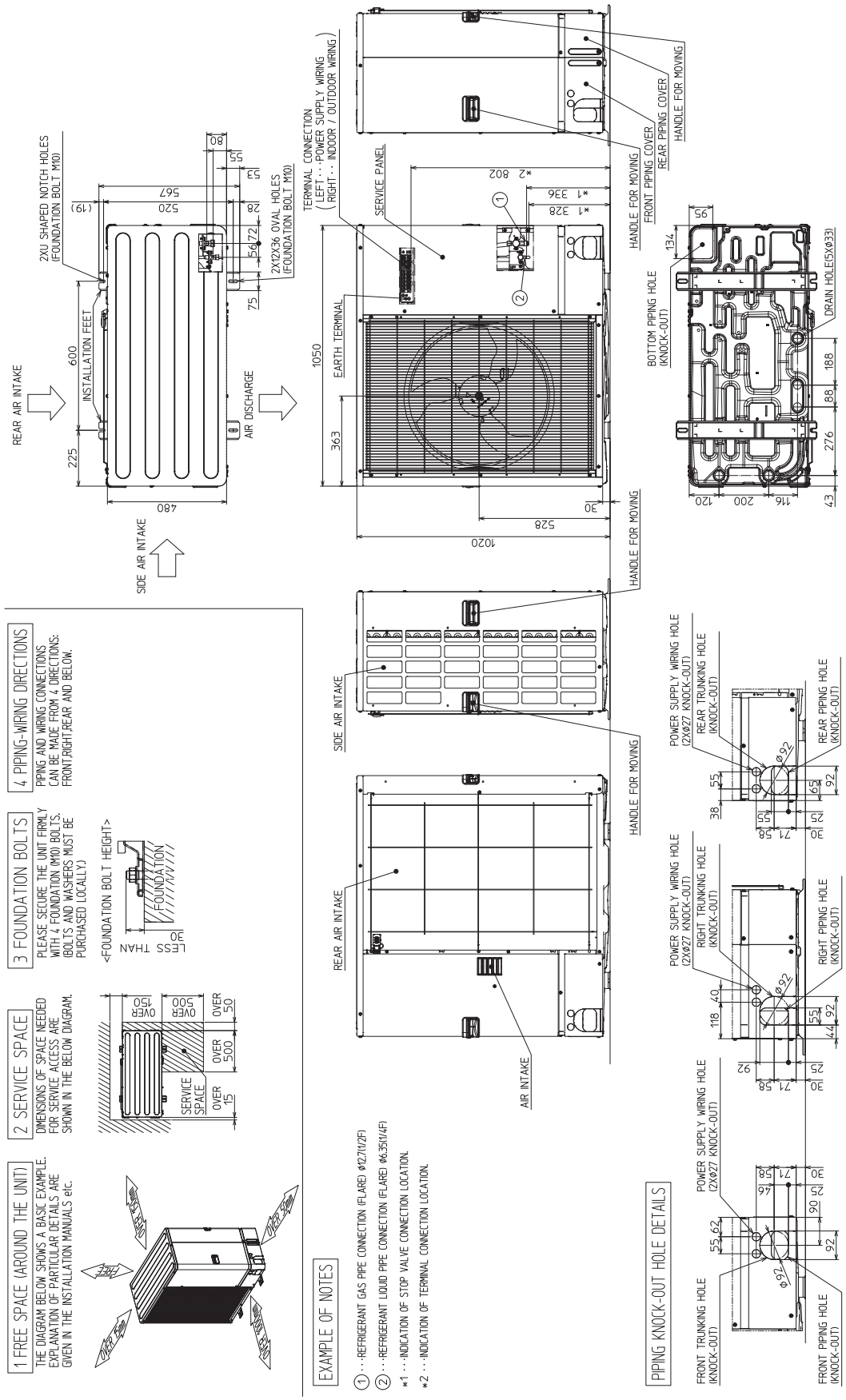

## ■ PXZ-4F75VG

Unit: mm

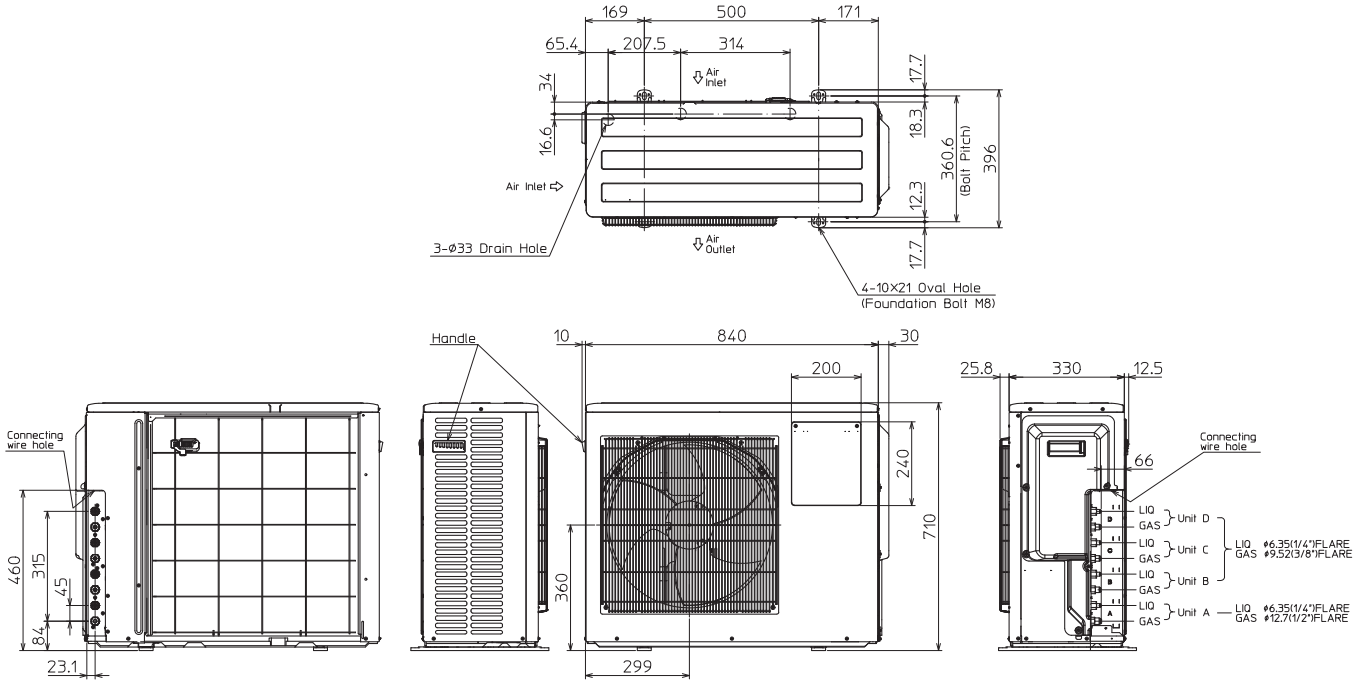


**1.Installation space**

Note : Leave front and both sides free of obstruction.

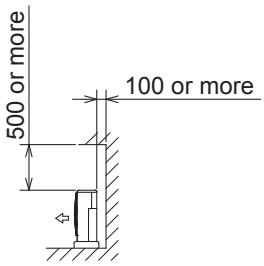


Note : Leave front and overhead free of obstruction.

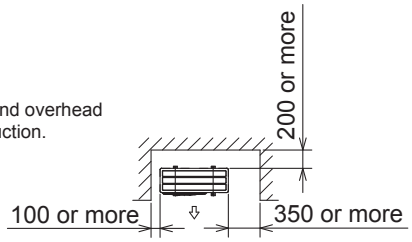


Note : Leave rear, overhead and both sides free of obstruction.

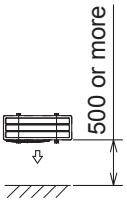


**2.Service space**

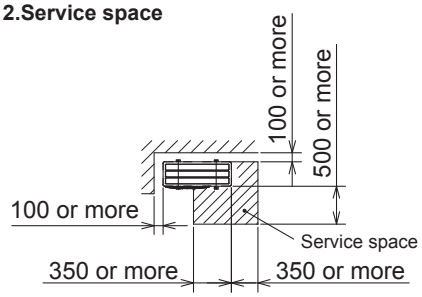

■ **PXZ-5F85VG**

Unit: mm

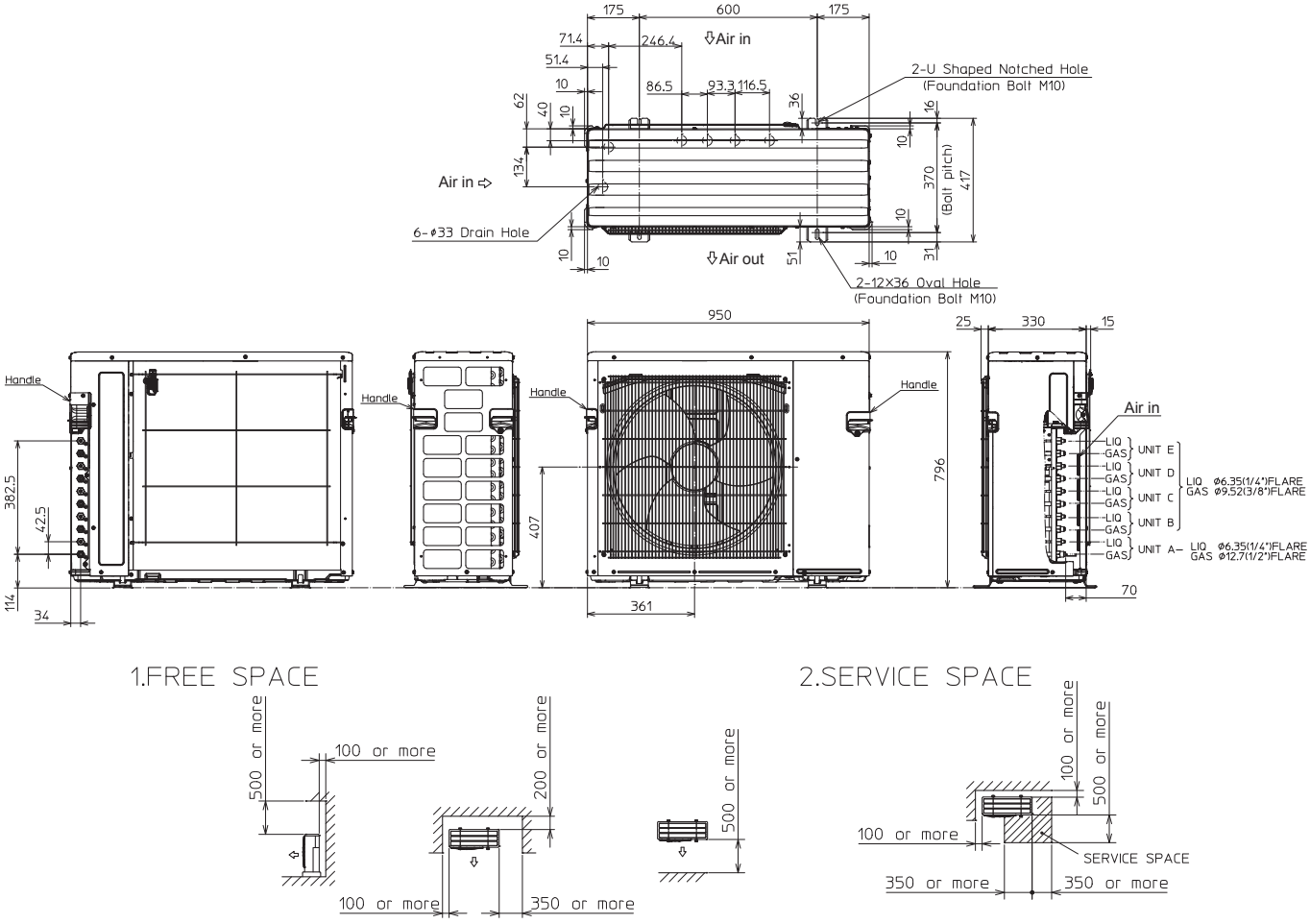

## (1)Packaged-type units

### ■ PUZ-WM50VHA PUZ-WM50VHA-BS

| SYMBOL | NAME | SYMBOL | NAME |
|---|---|---|---|
| TB1 | Terminal Block <Power Supply, Indoor/Outdoor> | CY1, CY2 | Capacitor |
| MC | Motor for Compressor | P.B. | Power Circuit Board |
| MF1 | Fan Motor | C.B. | Controller Circuit Board |
| 21S4 | Solenoid Valve (4-Way Valve) | SW1 | Switch <Manual Defrost, Defect History Record Reset, Refrigerant Address> |
| 63H | High Pressure Switch | | |
| 63HS | Pressure Sensor | SW4 | Switch <Function Switch> |
| TH3 | Thermistor <Liquid> | SW5 | Switch <Function Switch> |
| TH4 | Thermistor <Discharge> | SW6 | Switch <Function Switch, Model Select> |
| TH6 | Thermistor <2-Phase Pipe> | SW7 | Switch <Function Switch> |
| TH7 | Thermistor <Ambient> | SW8 | Switch <Function Switch> |
| TH8 | Thermistor <Heat Sink> | SW9 | Switch <Function Switch> |
| TH33 | Thermistor <Comp. Surface> | CNDM | Connector <Connection for Option> |
| TH34 | Thermistor <Plate Hex Liquid> | SV1/CH | Connector <Connection for Option> |
| LEV-A, LEV-B | Linear Expansion Valve | SV3/SS | Connector <Connection for Option> |
| ACL | Reactor | CNM | Connector <Connection for Option> |
| | | F1, F2, F3, F4 | Fuse <T6.3AL250V> |

*1 MODEL SELECT
The black square (■) indicates a switch position.

| MODEL | SW6 *2 |
|---|---|
| 50V | ON / OFF 1 2 3 4 5 6 7 8 |

*2 SW6 -1 to 3 : Function Switch

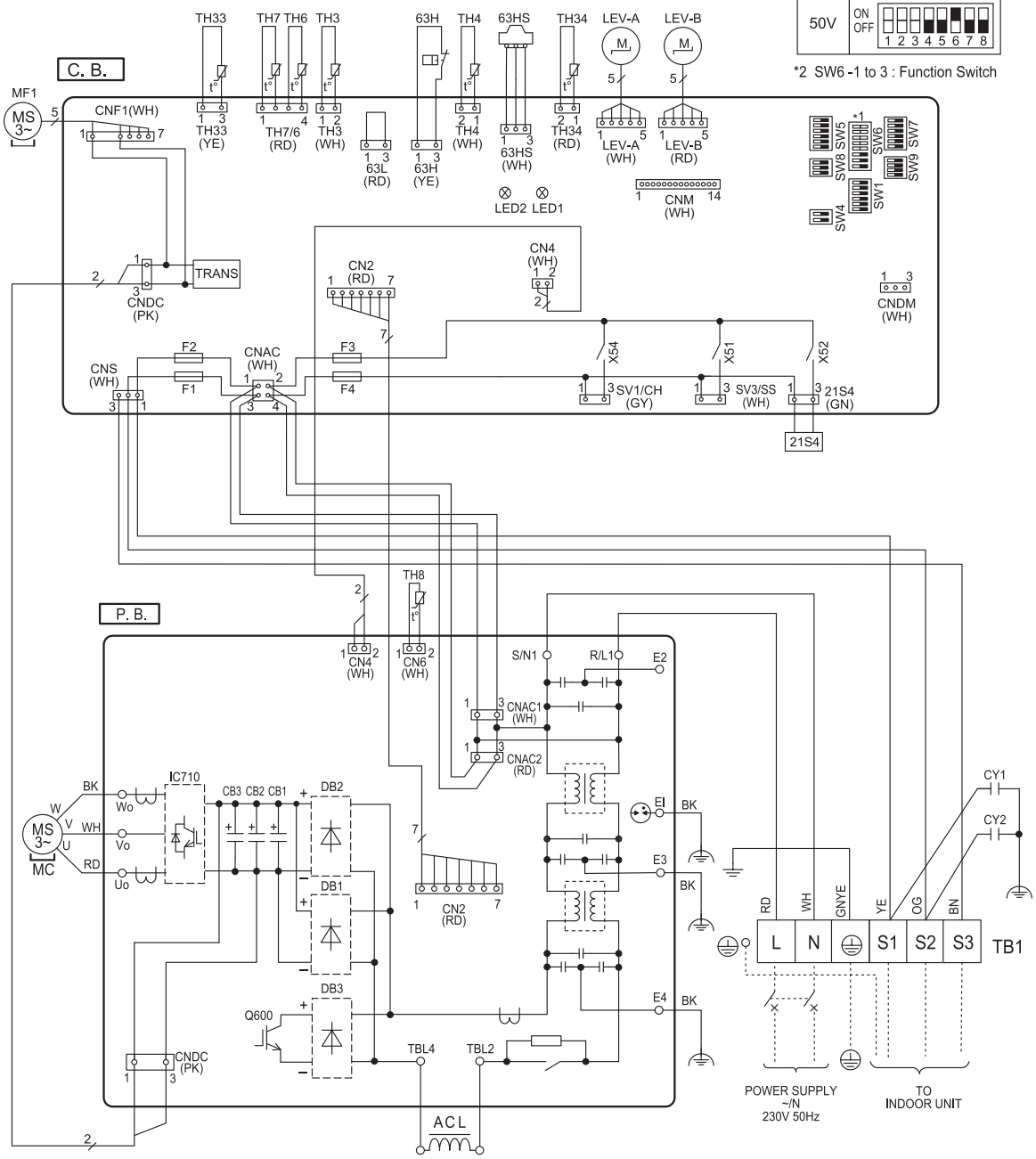

## ■ PUZ-WM60VAA PUZ-WM85VAA PUZ-WM112VAA
## PUZ-WM60VAA-BS PUZ-WM85VAA-BS PUZ-WM112VAA-BS

| SYMBOL | NAME | SYMBOL | NAME |
|---|---|---|---|
| TB1 | Terminal Block <Power Supply, Indoor/Outdoor> | P.B. | Power Circuit Board |
| MC | Motor for Compressor | C.B. | Controller Circuit Board |
| MF1 | Fan Motor | SW1 | Switch <Manual Defrost, Defect History Record Reset, Refrigerant Address> |
| 21S4 | Solenoid Valve (4-Way Valve) | | |
| 63H | High Pressure Switch | SW4 | Switch <Function Switch> |
| 63HS | Pressure Sensor | SW5 | Switch <Function Switch> |
| TH3 | Thermistor <Liquid> | SW6 | Switch <Function Switch, Model Select> |
| TH4 | Thermistor <Discharge> | SW7 | Switch <Function Switch> |
| TH6 | Thermistor <2-Phase Pipe> | SW8 | Switch <Function Switch> |
| TH7 | Thermistor <Ambient> | SW9 | Switch <Function Switch> |
| TH8 | Thermistor <Heat Sink> | CNDM | Connector <Connection for Option> |
| TH33 | Thermistor <Comp. Surface> | SV1/CH | Connector <Connection for Option> |
| TH34 | Thermistor <Plate Hex Liquid> | SV3/SS | Connector <Connection for Option> |
| LEV-A, LEV-B | Linear Expansion Valve | CNM | Connector <Connection for Option> |
| DCL1, DCL2, DCL3 | Reactor | F1, F2, F3, F4 | Fuse <T6.3AL250V> |
| CY1, CY2 | Capacitor | | |

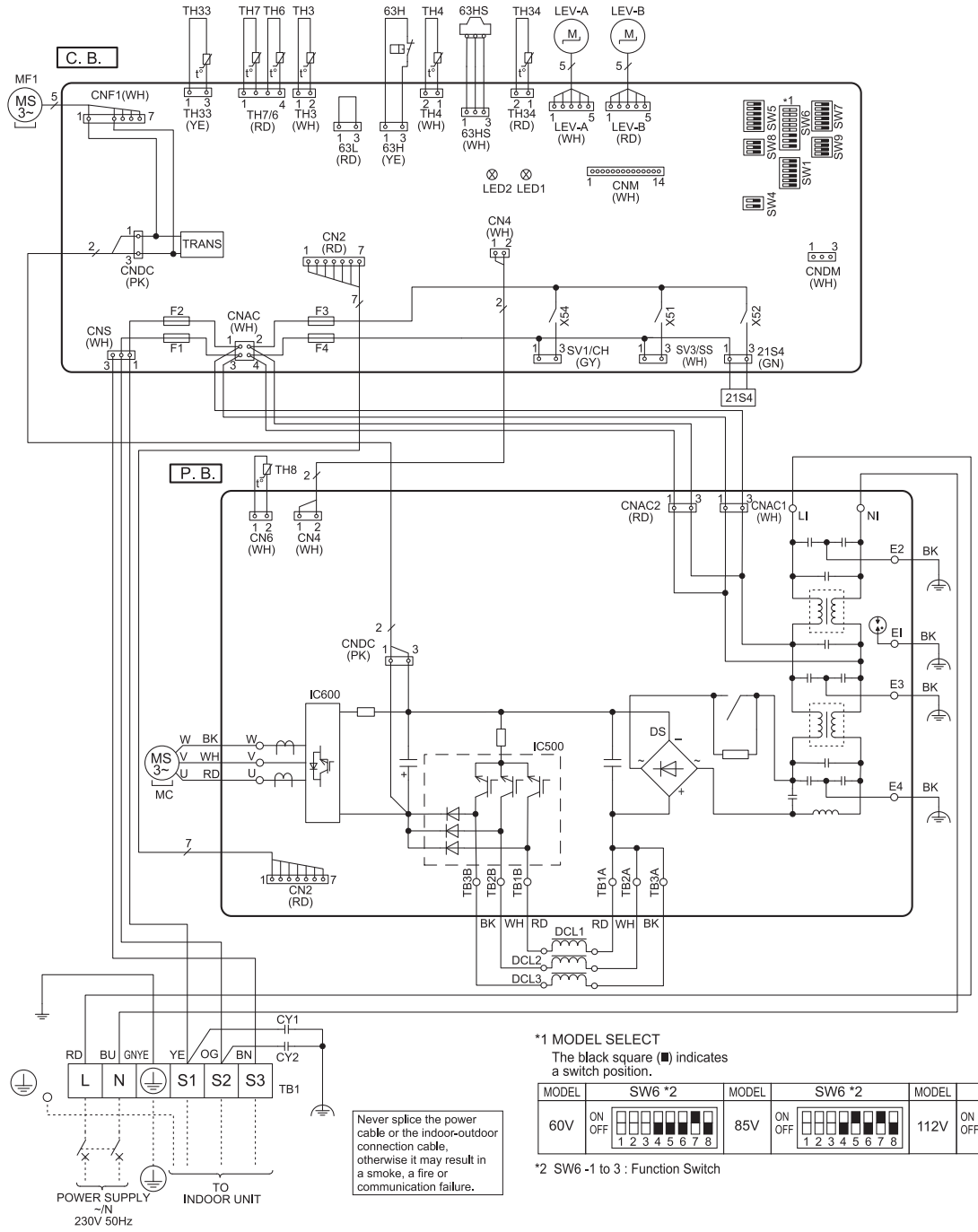


Never splice the power cable or the indoor-outdoor connection cable, otherwise it may result in a smoke, a fire or communication failure.

*1 MODEL SELECT
The black square (■) indicates a switch position.

| MODEL | SW6 *2 | MODEL | SW6 *2 | MODEL | SW6 *2 |
|---|---|---|---|---|---|
| 60V | ON OFF 1 2 3 4 5 6 7 8 | 85V | ON OFF 1 2 3 4 5 6 7 8 | 112V | ON OFF 1 2 3 4 5 6 7 8 |

*2 SW6 -1 to 3 : Function Switch

## ■ PUZ-HWM140VHA(-BS)

| SYMBOL | NAME | SYMBOL | NAME |
|---|---|---|---|
| TB1 | Terminal Block〈Power Supply〉 | CY1, CY2 | Capacitor |
| TB2 | Terminal Block〈Indoor/Outdoor〉 | P. B. | Power Circuit Board |
| MC | Motor for Compressor | N. F. | Noise Filter Circuit Board |
| MF1, MF2 | Fan Motor | C. B. | Controller Circuit Board |
| 21S4 | Solenoid Valve Coil〈4-Way Valve〉 | SW1 | Switch〈Manual Defrost, Defect History Record Reset, Function Switch〉 |
| 63H | High Pressure Switch | | |
| 63HS | Pressure Sensor | SW4 | Switch〈Function Switch〉 |
| TH3 | Thermistor〈Liquid〉 | SW5 | Switch〈Function Switch〉 |
| TH4 | Thermistor〈Discharge〉 | SW6 | Switch〈Function Switch, Model Select〉 |
| TH6 | Thermistor〈2-Phase pipe〉 | SW7 | Switch〈Function Switch〉 |
| TH7 | Thermistor〈Ambient〉 | SW8 | Switch〈Function Switch〉 |
| TH8 | Thermistor〈Heat Sink〉 | SW9 | Switch〈Function Switch〉 |
| TH32 | Thermistor〈Suction〉 | SV1/CH | Connector〈Connection for Option〉 |
| TH33 | Thermistor〈Comp. Surface〉 | SV3/SS | Connector〈Connection for Option〉 |
| TH34 | Thermistor〈Plate Hex Liquid〉 | CNDM | Connector〈Connection for Option〉 |
| LEV-A, LEV-B, LEV-C | Linear Expansion Valve | F1, F2 | Fuse〈T10AL250V〉 |
| DCL1, DCL2, DCL3 | Reactor | F3, F4 | Fuse〈T6.3AL250V〉 |

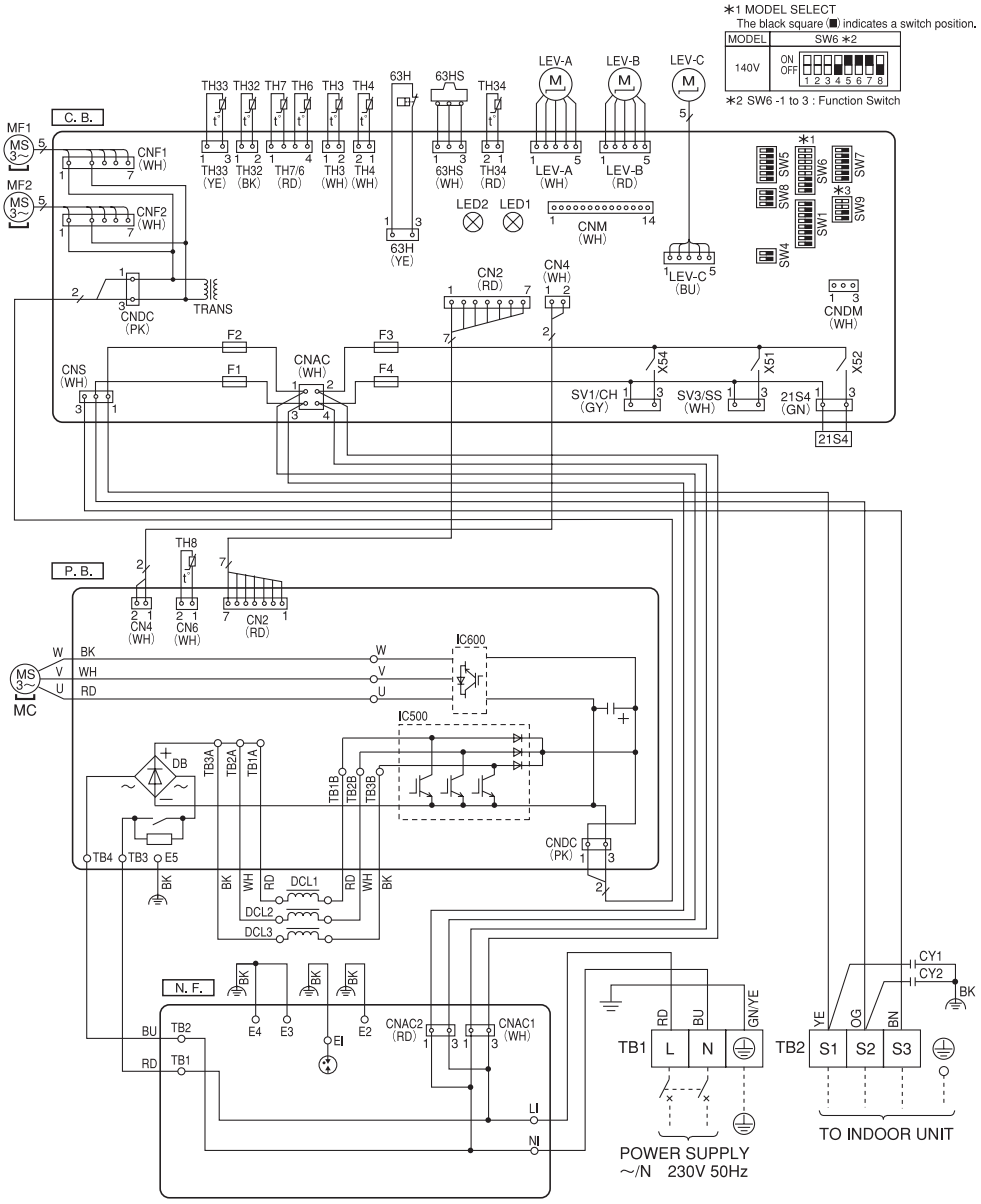


∗3 Ambient temp. of ZUBADAN Flash Injection becomes effective.
The black square (■) indicates a switch position.

| Ambient temp. | SW9-3, 9-4 ∗4 | Ambient temp. | SW9-3, 9-4 ∗4 | Ambient temp. | SW9-3, 9-4 ∗4 | Ambient temp. | SW9-3, 9-4 ∗4 |
|---|---|---|---|---|---|---|---|
| 3℃ or less (Default setting) | ON OFF 1 2 3 4 | 0℃ or less | ON OFF 1 2 3 4 | −3℃ or less | ON OFF 1 2 3 4 | −6℃ or less | ON OFF 1 2 3 4 |

∗4 SW9 -1 to 2 : Function Switch

## ■ PUZ-WM85YAA PUZ-WM112YAA
## PUZ-WM85YAA-BS PUZ-WM112YAA-BS

| SYMBOL | NAME | SYMBOL | NAME |
|---|---|---|---|
| TB1 | Terminal Block <Power Supply> | P. B. | Power Circuit Board |
| TB2 | Terminal Block <Indoor/Outdoor> | N. F. | Noise Filter Circuit Board |
| MC | Motor for Compressor | CONV. B. | Converter Circuit Board |
| MF1 | Fan Motor | C. B. | Controller Circuit Board |
| 21S4 | Solenoid Valve (4-Way Valve) | SW1 | Switch <Manual Defrost, Defect History Record Reset, Refrigerant Address> |
| 63H | High Pressure Switch | | |
| 63HS | Pressure Sensor | | |
| TH3 | Thermistor <Liquid> | SW4 | Switch <Function Switch> |
| TH4 | Thermistor <Discharge> | SW5 | Switch <Function Switch> |
| TH6 | Thermistor <2-Phase Pipe> | SW6 | Switch <Function Switch, Model Select> |
| TH7 | Thermistor <Ambient> | | |
| TH8 | Thermistor <Heat Sink> | SW7 | Switch <Function Switch> |
| TH33 | Thermistor <Comp. Surface> | SW8 | Switch <Function Switch> |
| TH34 | Thermistor <Plate Hex Liquid> | SW9 | Switch <Function Switch> |
| LEV-A, LEV-B | Linear Expansion Valve | CNDM | Connector <Connection for Option> |
| ACL1, ACL2, ACL3, ACL4 | Reactor | SV1/CH | Connector <Connection for Option> |
| | | SV3/SS | Connector <Connection for Option> |
| CY1, CY2 | Capacitor | CNM | Connector <Connection for Option> |
| CK | Capacitor | F1, F2, F3, F4 | Fuse <T6.3AL250V> |
| RS | Rush Current Protect Resistor | | |

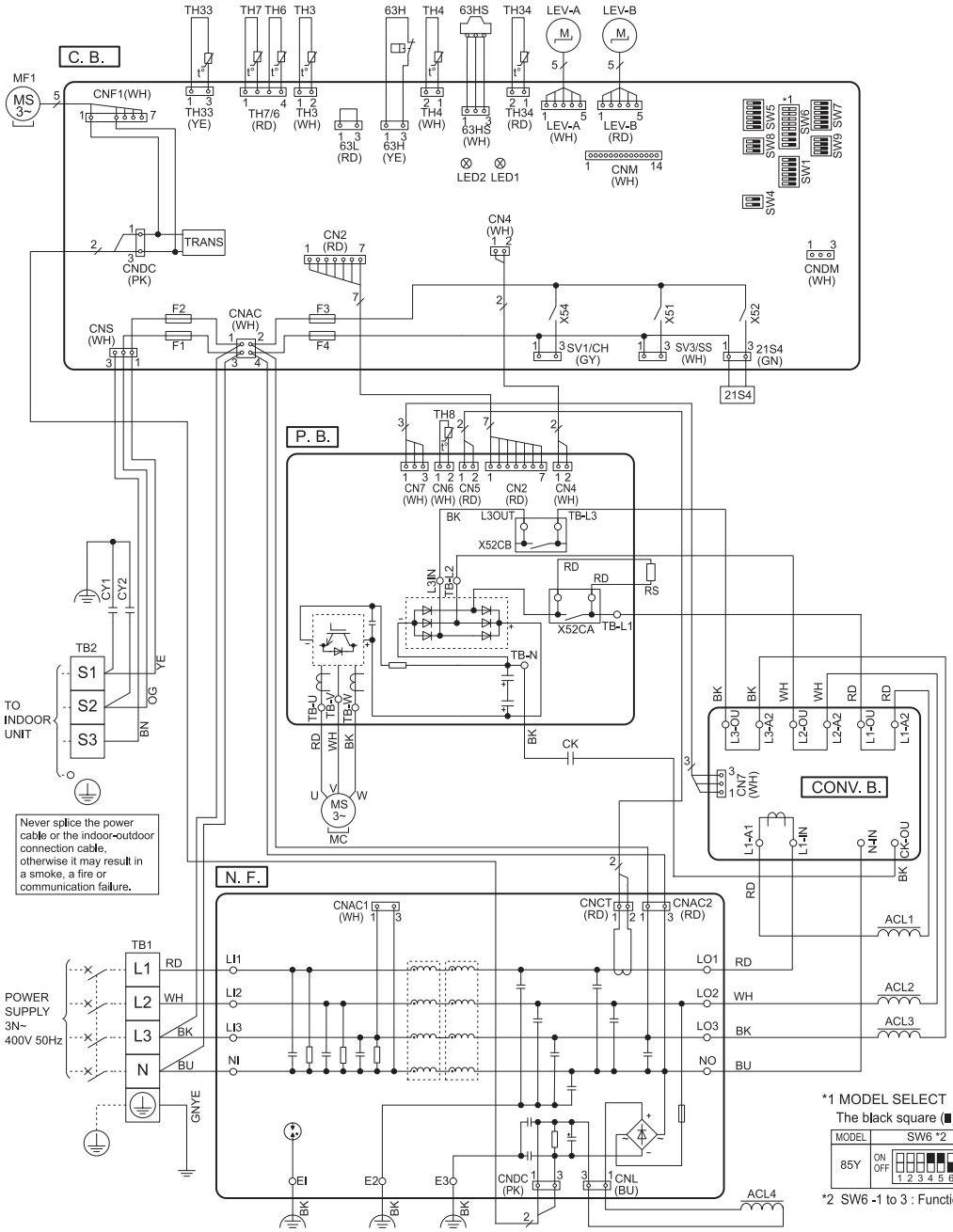


*1 MODEL SELECT
The black square (■) indicates a switch position.

| MODEL | SW6 *2 | MODEL | SW6 *2 |
|---|---|---|---|
| 85Y | ON OFF 1 2 3 4 5 6 7 8 | 112Y | ON OFF 1 2 3 4 5 6 7 8 |

*2 SW6 -1 to 3 : Function Switch

## ■ PUZ-HWM140YHA(-BS)

| SYMBOL | NAME | SYMBOL | NAME |
|---|---|---|---|
| TB1 | Terminal Block 〈Power Supply〉 | RS | Rush Current Protect Resistor |
| TB2 | Terminal Block 〈Indoor/Outdoor〉 | P. B. | Power Circuit Board |
| MC | Motor for Compressor | N. F. | Noise Filter Circuit Board |
| MF1, MF2 | Fan Motor | CONV. B. | Converter Circuit Board |
| 21S4 | Solenoid Valve Coil 〈4-Way Valve〉 | C. B. | Controller Circuit Board |
| 63H | High Pressure Switch | SW1 | Switch 〈Manual Defrost, Defect History Record Reset, Function Switch〉 |
| 63HS | Pressure Sensor | SW4 | Switch 〈Function Switch〉 |
| TH3 | Thermistor 〈Liquid〉 | SW5 | Switch 〈Function Switch〉 |
| TH4 | Thermistor 〈Discharge〉 | SW6 | Switch 〈Function Switch, Model Select〉 |
| TH6 | Thermistor 〈2-Phase pipe〉 | SW7 | Switch 〈Function Switch〉 |
| TH7 | Thermistor 〈Ambient〉 | SW8 | Switch 〈Function Switch〉 |
| TH8 | Thermistor 〈Heat Sink〉 | SW9 | Switch 〈Function Switch〉 |
| TH32 | Thermistor 〈Suction〉 | CNDM | Connector 〈Connection for Option〉 |
| TH33 | Thermistor 〈Comp. Surface〉 | SV1/CH | Connector 〈Connection for Option〉 |
| TH34 | Thermistor 〈Plate Hex Liquid〉 | SV3/SS | Connector 〈Connection for Option〉 |
| LEV-A, LEV-B, LEV-C | Linear Expansion Valve | F1, F2 | Fuse 〈T10AL250V〉 |
| ACL1, ACL2, ACL3, ACL4 | Reactor | F3, F4 | Fuse 〈T6.3AL250V〉 |
| CY1, CY2 | Capacitor | | |
| CK | Capacitor | | |

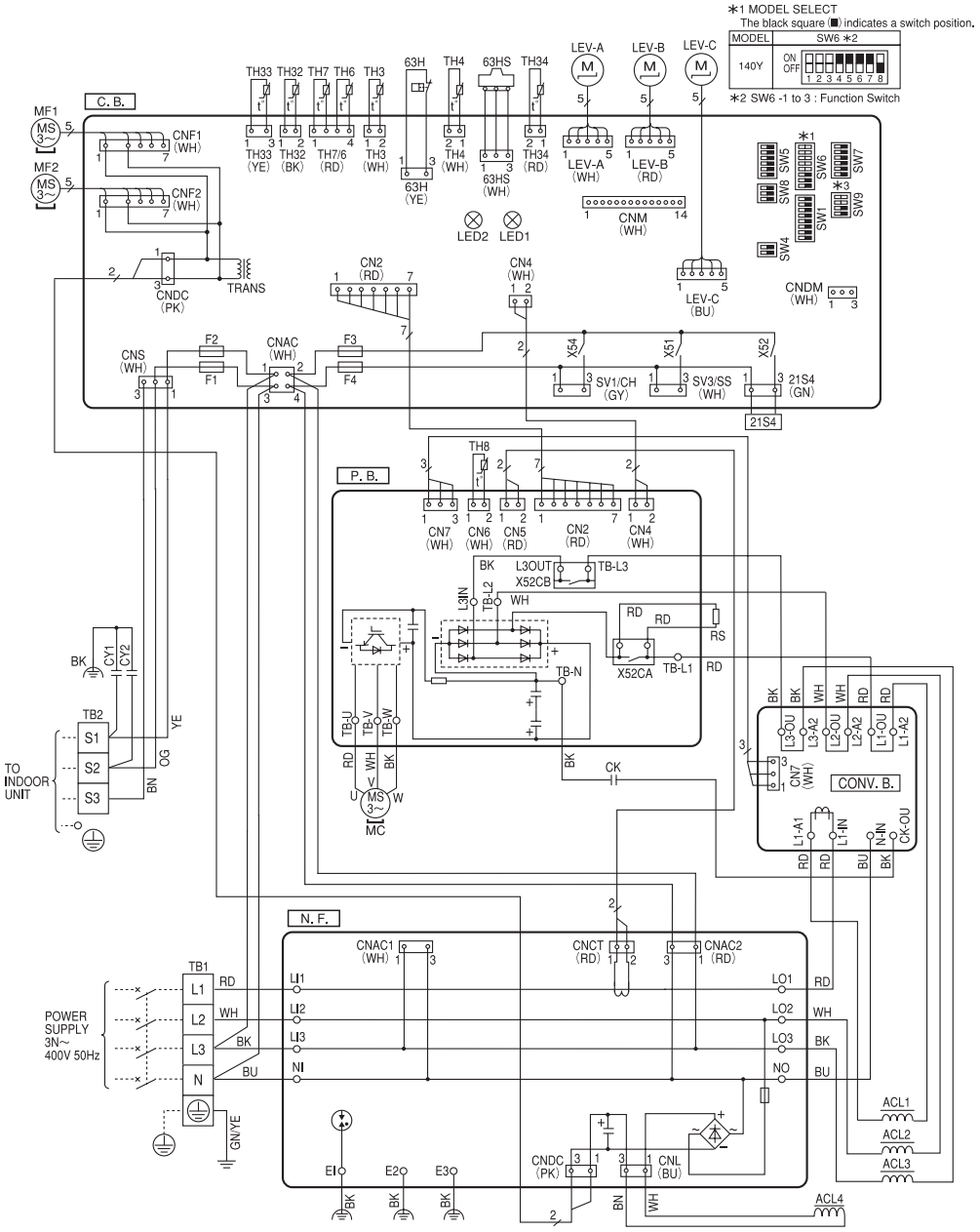


∗3 Ambient temp. of ZUBADAN Flash Injection becomes effective.
The black square (■) indicates a switch position.

| Ambient temp. | SW9-3, 9-4 ∗4 | Ambient temp. | SW9-3, 9-4 ∗4 | Ambient temp. | SW9-3, 9-4 ∗4 | Ambient temp. | SW9-3, 9-4 ∗4 |
|---|---|---|---|---|---|---|---|
| 3℃ or less (Default setting) | ON OFF 1 2 3 4 | 0℃ or less | ON OFF 1 2 3 4 | −3℃ or less | ON OFF 1 2 3 4 | −6℃ or less | ON OFF 1 2 3 4 |

∗4 SW9 -1 to 2 : Function Switch

## (2)Split-type units

■ **SUZ-SWM40VA**
**SUZ-SWM60VA**
**SUZ-SWM80VA**

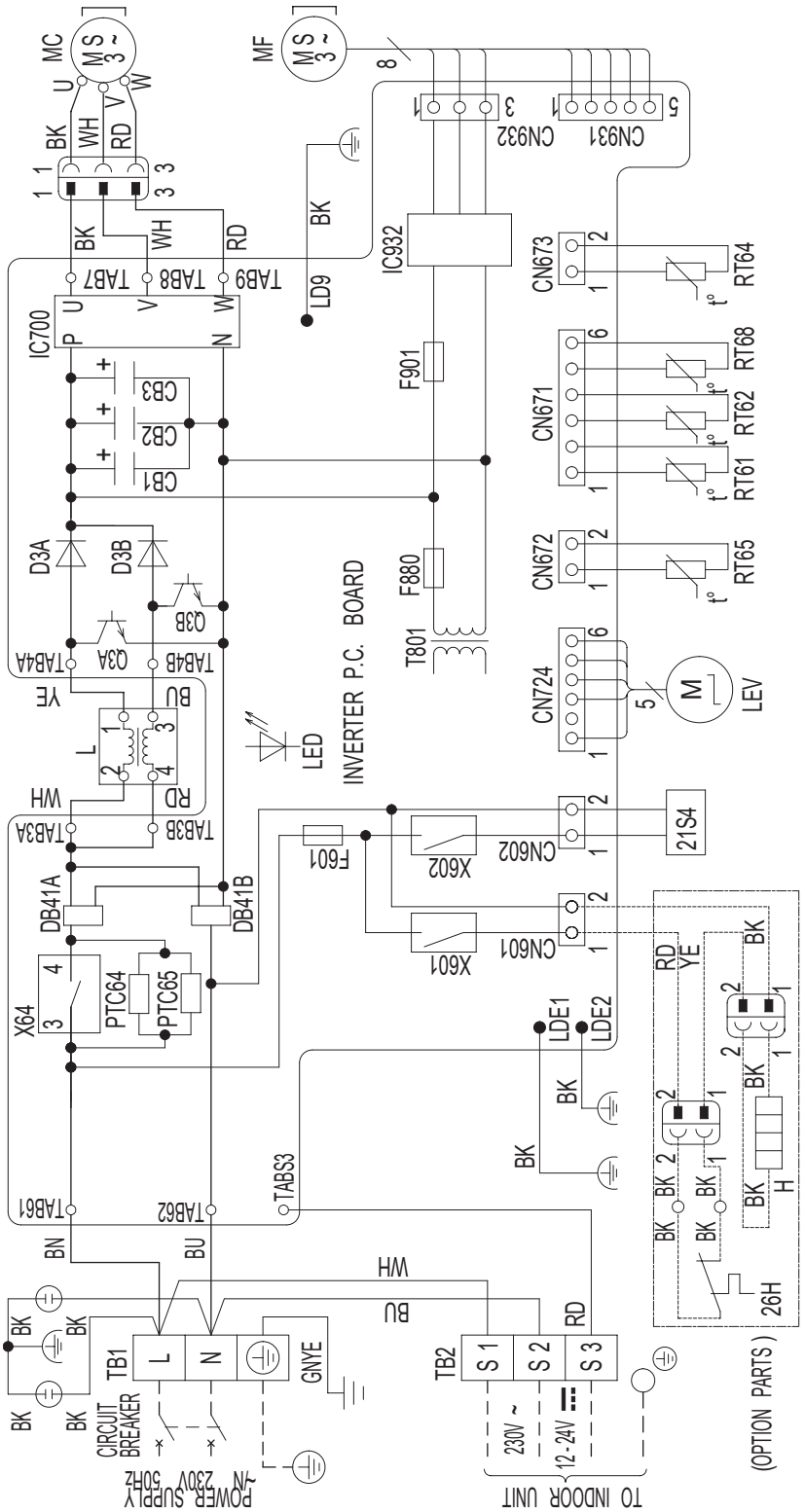


| SYMBOL | NAME | SYMBOL | NAME | SYMBOL | NAME | SYMBOL | NAME |
|---|---|---|---|---|---|---|---|
| CB1,CB2,CB3 | SMOOTHING CAPACITOR | IC700,IC932 | POWER MODULE | Q3A,Q3B | SWITCHING POWER TRANSISTOR | TB1,TB2 | TERMINAL BLOCK |
| DB41A,DB41B | DIODE MODULE | L | REACTOR | RT61 | DEFROST THERMISTOR | T801 | TRANSFORMER |
| D3A,D3B | DIODE | LED | LED | RT62 | DISCHARGE TEMP.THERMISTOR | X64 | RELAY |
| F601 | FUSE (T3.15AL250V ) | LEV | EXPANSION VALVE COIL | RT64 | FIN TEMP.THERMISTOR | X601,X602 | RELAY |
| F880 | FUSE (T3.15AL250V ) | MC | COMPRESSOR | RT65 | AMBIENT TEMP.THERMISTOR | 21S4 | REVERSING VALVE COIL |
| F901 | FUSE (T3.15AL250V ) | MF | FAN MOTOR | RT68 | OUTDOOR HEAT EXCHANGER TEMP.THERMISTOR | 26H | HEATER PROTECTOR(OPTION PARTS) |
| H | DEFROST HEATER (OPTION PARTS) | PTC64,PTC65 | CIRCUIT PROTECTION | | | | |

NOTES 1.About the indoor side electric wiring, refer to the indoor unit electric wiring diagram for servicing.
2.Use copper supply wires. 3.Symbols indicate, □□ :Terminal block ○○○ :Connector

## ■ SUZ-SWM30VA
## SUZ-SWM40VA2
## SUZ-SWM40VA2-SC
## SUZ-SWM60VA2
## SUZ-SWM60VA2-SC

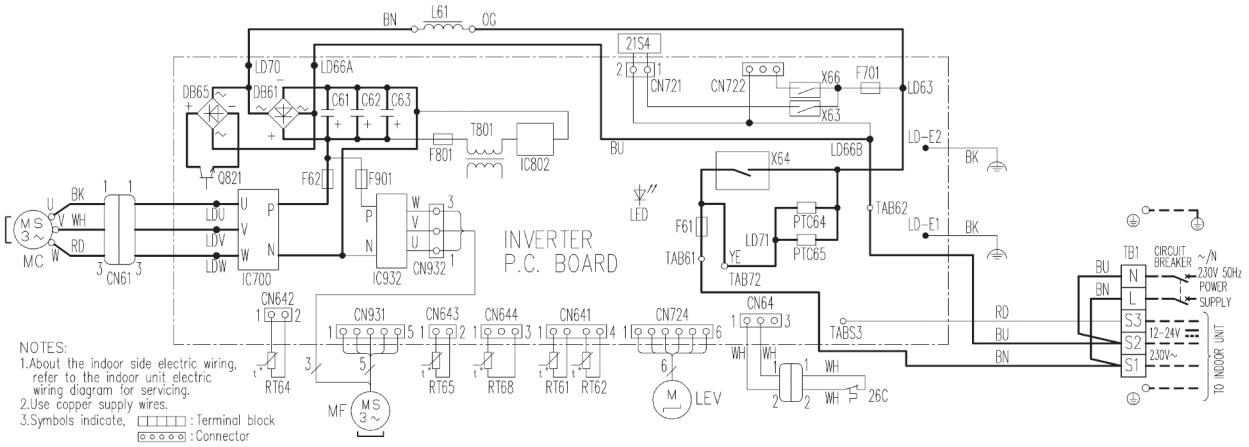


【LEGEND】

| SYMBOL | NAME | SYMBOL | NAME | SYMBOL | NAME |
|---|---|---|---|---|---|
| CN61 | CONNECTOR | LEV | EXPANSION VALVE COIL | RT65 | AMBIENT TEMP. THERMISTOR |
| C61, C62, C63 | SMOOTHING CAPACITOR | L61 | REACTOR | RT68 | OUTDOOR HEAT EXCHANGER TEMP. THERMISTOR |
| DB61, DB65 | DIODE MODULE | MC | COMPRESSOR | TB1 | TERMINAL BLOCK |
| F61 | FUSE (25A 250V) | MF | FAN MOTOR | T801 | TRANSFORMER |
| F62 | FUSE (15A 250V) | PTC64, PTC65 | CIRCUIT PROTECTION | X63, X64, X66 | RELAY |
| F701, F801, F901 | FUSE (T3.15AL250V) | Q821 | SWITCHING POWER TRANSISTOR | 21S4 | REVERSING VALVE COIL |
| IC700, IC932 | POWER MODULE | RT61 | DEFROST THERMISTOR | 26C | COMPRESSOR PROTECTOR |
| IC802 | POWER DEVICE | RT62 | DISCHARGE TEMP. THERMISTOR | | |
| LED | LED | RT64 | FIN TEMP. THERMISTOR | | |

## ■ SUZ-SHWM30VAH
## SUZ-SHWM40VAH
## SUZ-SHWM40VAH-SC

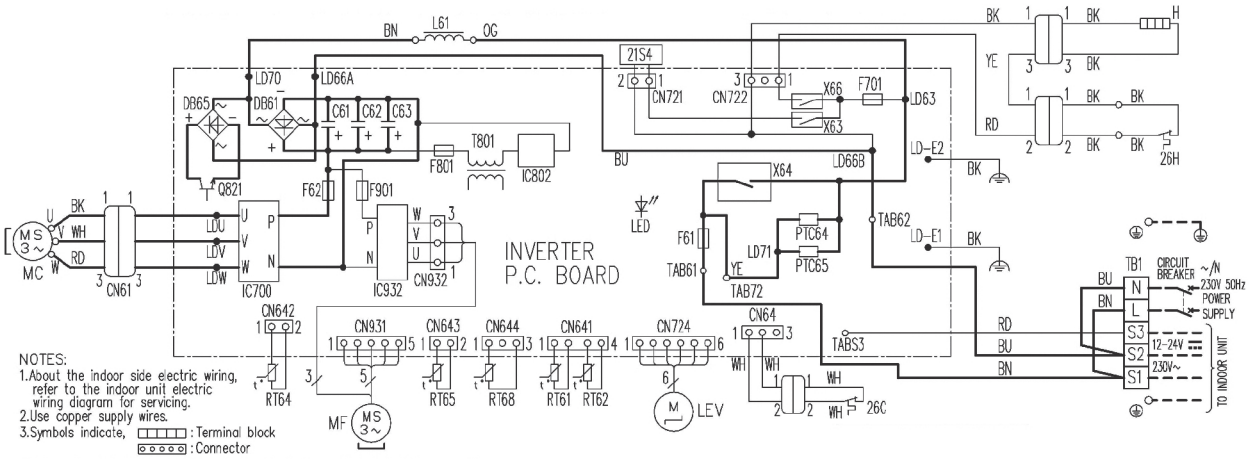


【LEGEND】

| SYMBOL | NAME | SYMBOL | NAME | SYMBOL | NAME |
|---|---|---|---|---|---|
| CN61 | CONNECTOR | LEV | EXPANSION VALVE COIL | RT68 | OUTDOOR HEAT EXCHANGER TEMP. THERMISTOR |
| C61, C62, C63 | SMOOTHING CAPACITOR | L61 | REACTOR | TB1 | TERMINAL BLOCK |
| DB61, DB65 | DIODE MODULE | MC | COMPRESSOR | T801 | TRANSFORMER |
| F61 | FUSE (25A 250V) | MF | FAN MOTOR | X63, X64, X66 | RELAY |
| F62 | FUSE (15A 250V) | PTC64, PTC65 | CIRCUIT PROTECTION | 21S4 | REVERSING VALVE COIL |
| F701, F801, F901 | FUSE (T3.15AL250V) | Q821 | SWITCHING POWER TRANSISTOR | 26C | COMPRESSOR PROTECTOR |
| H | DEFROST HEATER | RT61 | DEFROST THERMISTOR | 26H | HEATER PROTECTOR |
| IC700, IC932 | POWER MODULE | RT62 | DISCHARGE TEMP. THERMISTOR | | |
| IC802 | POWER DEVICE | RT64 | FIN TEMP. THERMISTOR | | |
| LED | LED | RT65 | AMBIENT TEMP. THERMISTOR | | |

## ■ SUZ-SHWM60VAH
## SUZ-SHWM60VAH-SC
## SUZ-SWM80VAH2
## SUZ-SWM100VAH

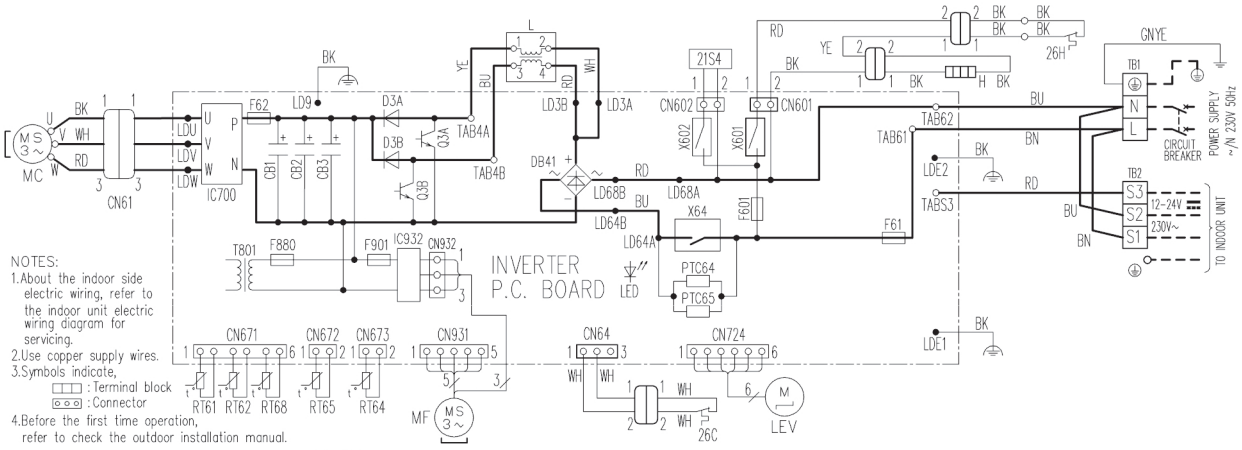


【LEGEND】

| SYMBOL | NAME | SYMBOL | NAME | SYMBOL | NAME |
|---|---|---|---|---|---|
| CB1,CB2,CB3 | SMOOTHING CAPACITOR | L | REACTOR | RT65 | AMBIENT TEMP. THERMISTOR |
| CN61 | CONNECTOR | LED | LED | RT68 | OUTDOOR HEAT EXCHANGER TEMP. THERMISTOR |
| DB41 | DIODE MODULE | LEV | EXPANSION VALVE COIL | | |
| D3A,D3B | DIODE | MC | COMPRESSOR | TB1,TB2 | TERMINAL BLOCK |
| F601 | FUSE (T3.15AL250V) | MF | FAN MOTOR | T801 | TRANSFORMER |
| F61 | FUSE (25A 250V) | PTC64,PTC65 | CIRCUIT PROTECTION | X601,X602 | RELAY |
| F62 | FUSE (15A 250V) | Q3A,Q3B | SWITCHING POWER TRANSISTOR | X64 | RELAY |
| F880,F901 | FUSE (T3.15AL250V) | RT61 | DEFROST THERMISTOR | 21S4 | REVERSING VALVE COIL |
| H | DEFROST HEATER | RT62 | DISCHARGE TEMP. THERMISTOR | 26C | COMPRESSOR PROTECTOR |
| IC700,IC932 | POWER MODULE | RT64 | FIN TEMP. THERMISTOR | 26H | HEATER PROTECTOR |

## ■ SUZ-SWM80VA2
## SUZ-SWM100VA

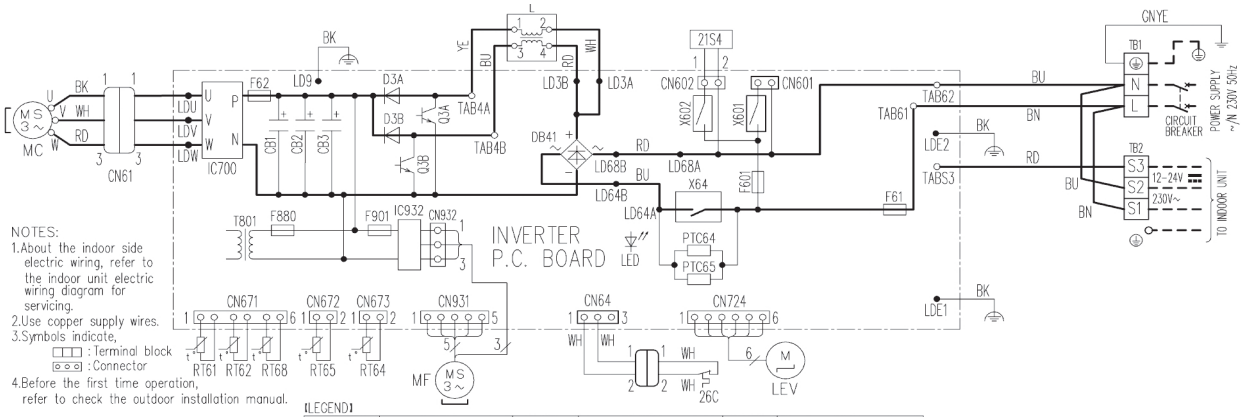


【LEGEND】

| SYMBOL | NAME | SYMBOL | NAME | SYMBOL | NAME |
|---|---|---|---|---|---|
| CB1,CB2,CB3 | SMOOTHING CAPACITOR | LED | LED | RT65 | AMBIENT TEMP. THERMISTOR |
| CN61 | CONNECTOR | LEV | EXPANSION VALVE COIL | RT68 | OUTDOOR HEAT EXCHANGER TEMP. THERMISTOR |
| DB41 | DIODE MODULE | MC | COMPRESSOR | | |
| D3A,D3B | DIODE | MF | FAN MOTOR | TB1,TB2 | TERMINAL BLOCK |
| F601 | FUSE (T3.15AL250V) | PTC64,PTC65 | CIRCUIT PROTECTION | T801 | TRANSFORMER |
| F61 | FUSE (25A 250V) | Q3A,Q3B | SWITCHING POWER TRANSISTOR | X601,X602 | RELAY |
| F62 | FUSE (15A 250V) | RT61 | DEFROST THERMISTOR | X64 | RELAY |
| F880,F901 | FUSE (T3.15AL250V) | RT62 | DISCHARGE TEMP. THERMISTOR | 21S4 | REVERSING VALVE COIL |
| IC700,IC932 | POWER MODULE | RT64 | FIN TEMP. THERMISTOR | 26C | COMPRESSOR PROTECTOR |
| L | REACTOR | | | | |

## ■ PUZ-SWM60VAA PUZ-SWM80VAA
## PUZ-SHWM60VAA PUZ-SHWM80VAA

[LEGEND]

| SYMBOL | NAME | SYMBOL | NAME |
|---|---|---|---|
| TB1 | Terminal Block <Power Supply, Indoor/Outdoor> | P. B. | Power Circuit Board |
| MC | Motor for Compressor | C. B. | Controller Circuit Board |
| MF1 | Fan Motor | SW1 | Switch <Manual Defrost, Defect History Record Reset, Refrigerant Address> |
| 21S4 | Solenoid Valve (4-Way Valve) | | |
| 63H | High Pressure Switch | SW4 | Switch <Function Switch> |
| 63HS | High Pressure Sensor | SW5 | Switch <Function Switch> |
| TH3 | Thermistor <Liquid> | SW6 | Switch <Function Switch, Model Select> |
| TH4 | Thermistor <Discharge> | SW7 | Switch <Function Switch> |
| TH6 | Thermistor <2-Phase Pipe> | SW8 | Switch <Function Switch> |
| TH7 | Thermistor <Ambient> | SW9 | Switch <Function Switch> |
| TH8 | Thermistor <Heat Sink> | SWP | Switch <Pump Down> |
| TH32 | Thermistor <Suction> | CNDM | Connector <Connection for Option> |
| TH33 | Thermistor <Comp. Surface> | SV1/CH | Connector <Connection for Option> |
| TRS | Thermal Protector | SV3/SS | Connector <Connection for Option> |
| LEV-A, LEV-B, LEV-C | Linear Expansion Valve | CNM | Connector <Connection for Option> |
| DCL | Reactor | F1, F2 | Fuse <T10AL250V> |
| CY1, CY2 | Capacitor | F3, F4 | Fuse <T6.3AL250V> |

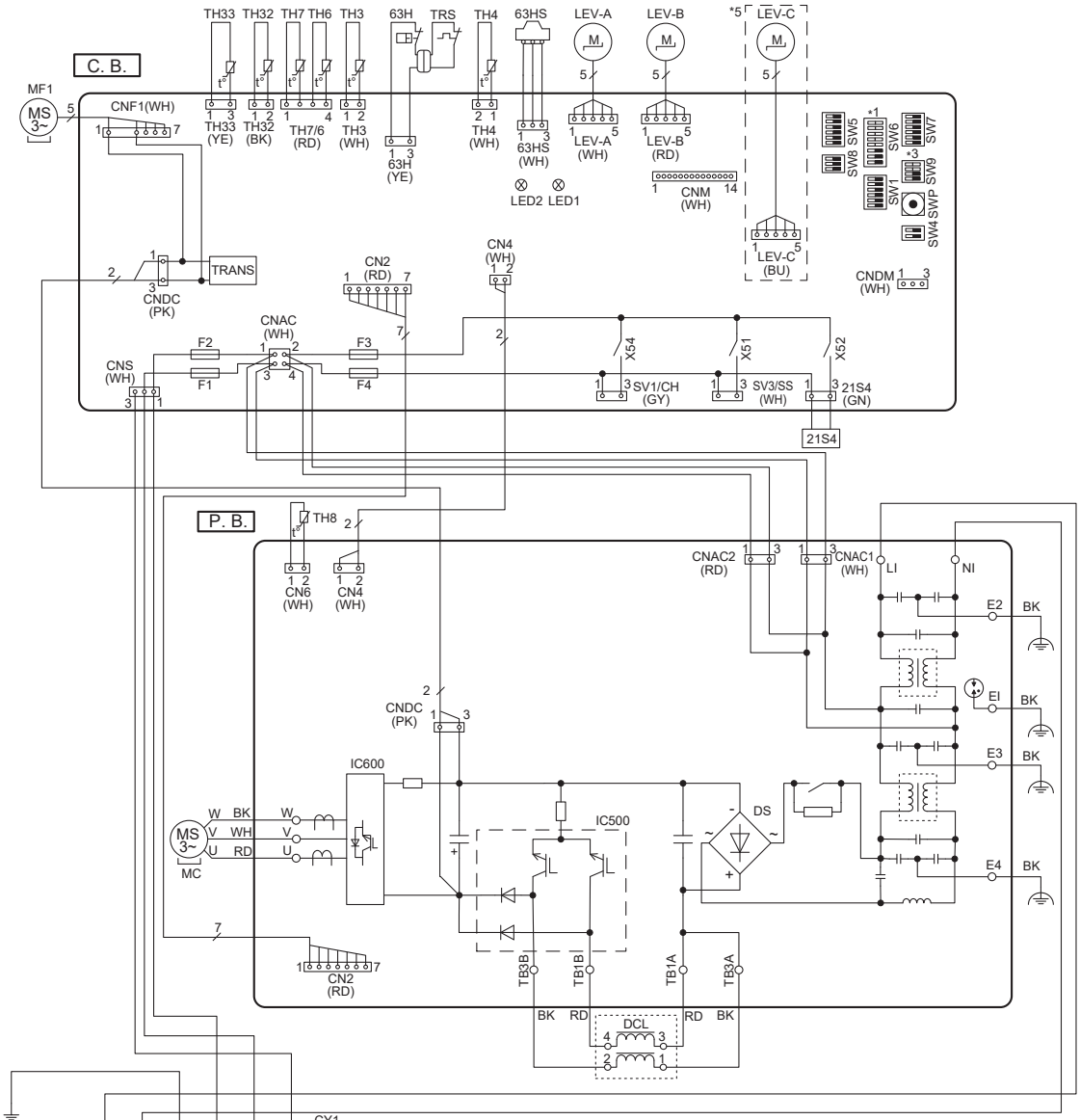


Never splice the power cable or the indoor-outdoor connection cable, otherwise it may result in a smoke, a fire or communication failure.

*1 MODEL SELECT
The black square (■) indicates a switch position.

| MODEL | SW6 *2 | MODEL | SW6 *2 |
|---|---|---|---|
| 60V | ON OFF 1 2 3 4 5 6 7 8 | 80V | ON OFF 1 2 3 4 5 6 7 8 |

*2 SW6-1 to SW6-3 : Function Switch

*3 SW9-3 and SW9-4: Function Switch for SHWM only
Ambient temp. of ZUBADAN Flash Injection becomes effective.
The black square (■) indicates a switch position.

| Ambient temp. | SW9 *4 | Ambient temp. | SW9 *4 | Ambient temp. | SW9 *4 | Ambient temp. | SW9 *4 |
|---|---|---|---|---|---|---|---|
| −6°C or less (Default setting) | ON OFF 1 2 3 4 | −3°C or less | ON OFF 1 2 3 4 | 0°C or less | ON OFF 1 2 3 4 | 3°C or less | ON OFF 1 2 3 4 |

*4 SW9-1 and SW9-2 : Function Switch

*5 SHWM only

## ■ PUZ-SWM100VAA PUZ-SWM120VAA
## PUZ-SHWM100VAA PUZ-SHWM120VAA

[LEGEND]

| SYMBOL | NAME | SYMBOL | NAME |
|---|---|---|---|
| TB1 | Terminal Block <Power Supply, Indoor/Outdoor> | P.B. | Power Circuit Board |
| MC | Motor for Compressor | C.B. | Controller Circuit Board |
| MF1 | Fan Motor | SW1 | Switch <Manual Defrost, Defect History Record Reset, Refrigerant Address> |
| 21S4 | Solenoid Valve (4-Way Valve) | SW4 | Switch <Function Switch> |
| 63H | High Pressure Switch | SW5 | Switch <Function Switch> |
| 63HS | High Pressure Sensor | SW6 | Switch <Function Switch, Model Select> |
| TH3 | Thermistor <Liquid> | SW7 | Switch <Function Switch> |
| TH4 | Thermistor <Discharge> | SW8 | Switch <Function Switch> |
| TH6 | Thermistor <2-Phase Pipe> | SW9 | Switch <Function Switch> |
| TH7 | Thermistor <Ambient> | SWP | Switch <Pump Down> |
| TH8 | Thermistor <Heat Sink> | CNDM | Connector <Connection for Option> |
| TH32 | Thermistor <Suction> | SV1/CH | Connector <Connection for Option> |
| TH33 | Thermistor <Comp. Surface> | SV3/SS | Connector <Connection for Option> |
| TRS | Thermal Protector | CNM | Connector <Connection for Option> |
| LEV-A, LEV-B, LEV-C | Linear Expansion Valve | F1, F2 | Fuse <T10AL250V> |
| DCL1, DCL2, DCL3 | Reactor | F3, F4 | Fuse <T6.3AL250V> |
| CY1, CY2 | Capacitor | | |

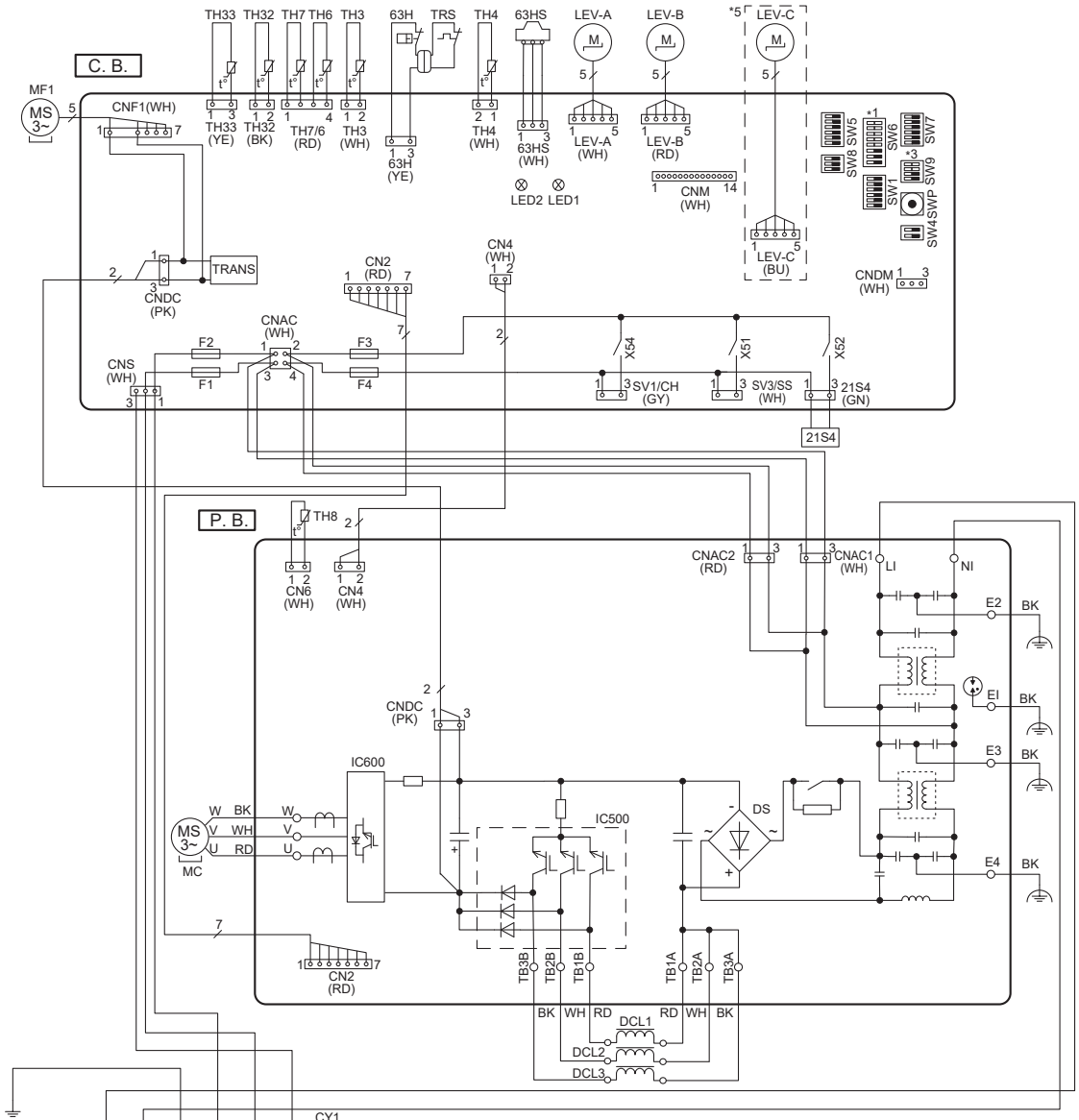


Never splice the power cable or the indoor-outdoor connection cable, otherwise it may result in a smoke, a fire or communication failure.

*1 MODEL SELECT
The black square (■) indicates a switch position.

| MODEL | SW6 *2 |
|---|---|
| 100V | ON OFF 1 2 3 4 5 6 7 8 |

| MODEL | SW6 *2 |
|---|---|
| 120V | ON OFF 1 2 3 4 5 6 7 8 |

*2 SW6-1 to SW6-3 : Function Switch

*3 SW9-3 and SW9-4: Function Switch for SHWM only
Ambient temp. of ZUBADAN Flash Injection becomes effective.
The black square (■) indicates a switch position.

| Ambient temp. | SW9 *4 | Ambient temp. | SW9 *4 | Ambient temp. | SW9 *4 | Ambient temp. | SW9 *4 |
|---|---|---|---|---|---|---|---|
| –6°C or less (Default setting) | ON OFF 1 2 3 4 | –3°C or less | ON OFF 1 2 3 4 | 0°C or less | ON OFF 1 2 3 4 | 3°C or less | ON OFF 1 2 3 4 |

*4 SW9-1 and SW9-2 : Function Switch

*5 SHWM only

## ■ PUZ-SWM140VAA PUZ-SHWM140VAA

[LEGEND]

| SYMBOL | NAME | SYMBOL | NAME |
|---|---|---|---|
| TB1 | Terminal Block <Power Supply, Indoor/Outdoor> | P. B. | Power Circuit Board |
| MC | Motor for Compressor | N. F. | Noise Filter Circuit Board |
| MF1 | Fan Motor | C. B. | Controller Circuit Board |
| 21S4 | Solenoid Valve (4-Way Valve) | SW1 | Switch <Manual Defrost, Defect History Record Reset, Refrigerant Address> |
| 63H | High Pressure Switch | SW4 | Switch <Function Switch> |
| 63HS | High Pressure Sensor | SW5 | Switch <Function Switch> |
| TH3 | Thermistor <Liquid> | SW6 | Switch <Function Switch, Model Select> |
| TH4 | Thermistor <Discharge> | SW7 | Switch <Function Switch> |
| TH6 | Thermistor <2-Phase Pipe> | SW8 | Switch <Function Switch> |
| TH7 | Thermistor <Ambient> | SW9 | Switch <Function Switch> |
| TH8 | Thermistor <Heat Sink> | SWP | Switch <Pump Down> |
| TH32 | Thermistor <Suction> | CNDM | Connector <Connection for Option> |
| TH33 | Thermistor <Comp. Surface> | SV1/CH | Connector <Connection for Option> |
| TRS | Thermal Protector | SV3/SS | Connector <Connection for Option> |
| LEV-A, LEV-B, LEV-C | Linear Expansion Valve | CNM | Connector <Connection for Option> |
| DCL1, DCL2, DCL3 | Reactor | F1, F2 | Fuse <T10AL250V> |
| CY1, CY2 | Capacitor | F3, F4 | Fuse <T6.3AL250V> |

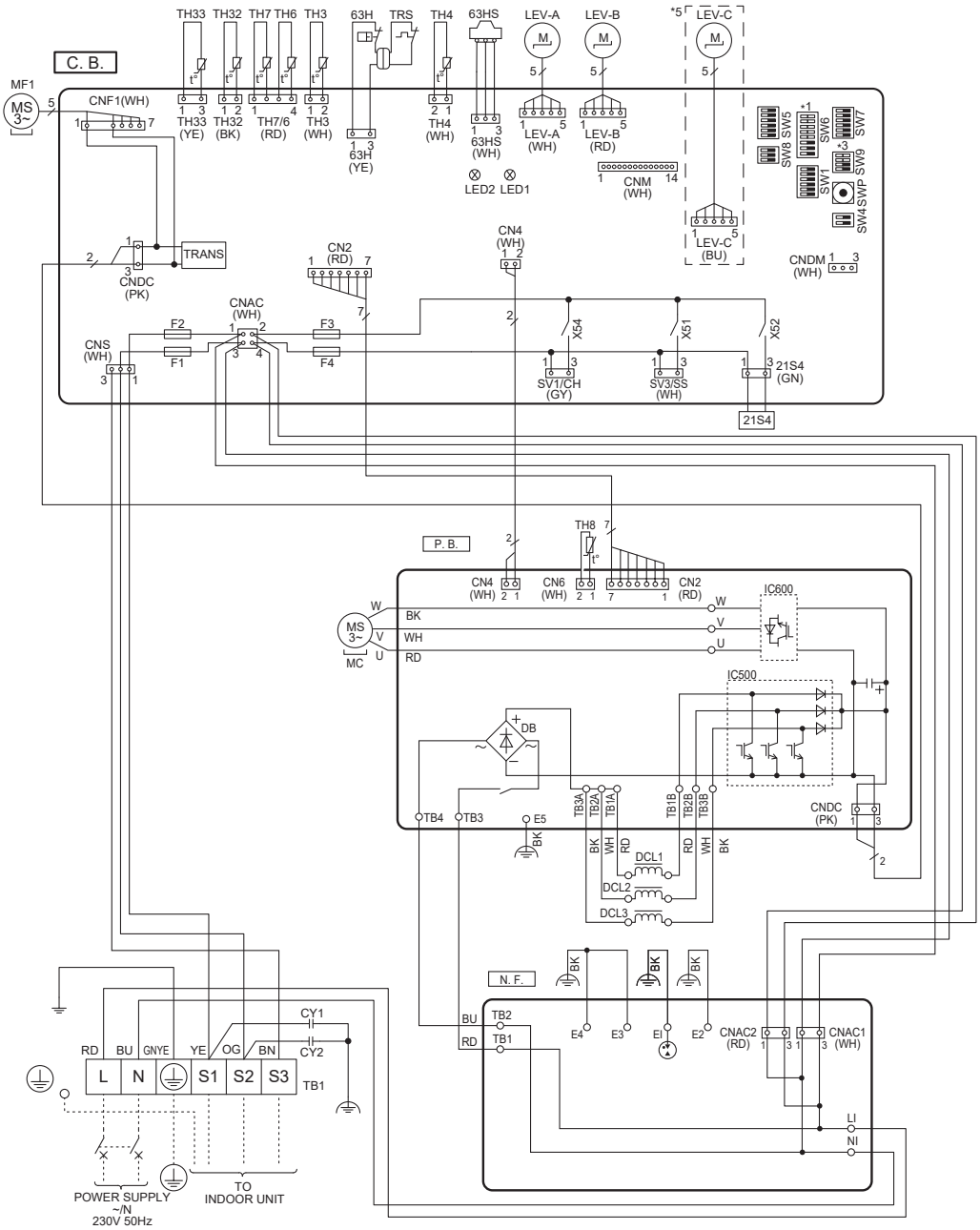


Never splice the power cable or the indoor-outdoor connection cable, otherwise it may result in a smoke, a fire or communication failure.

*1 MODEL SELECT
The black square (■) indicates a switch position.

| MODEL | SW6 *2 |
|---|---|
| 140V | ON / OFF 1 2 3 4 5 6 7 8 |

*2 SW6-1 to SW6-3 : Function Switch

*3 SW9-3 and SW9-4: Function Switch
Ambient temp. of ZUBADAN Flash Injection becomes effective.
The black square (■) indicates a switch position.

| Ambient temp. | SW9 *4 | Ambient temp. | SW9 *4 | Ambient temp. | SW9 *4 | Ambient temp. | SW9 *4 |
|---|---|---|---|---|---|---|---|
| –6°C or less (Default setting) | ON OFF 1 2 3 4 | –3°C or less | ON OFF 1 2 3 4 | 0°C or less | ON OFF 1 2 3 4 | 3°C or less | ON OFF 1 2 3 4 |

*4 SW9-1 and SW9-2 : Function Switch

*5 SHWM only

## ■ PUZ-SWM80YAA PUZ-SHWM80YAA PUZ-SWM100YAA PUZ-SHWM100YAA PUZ-SWM120YAA PUZ-SHWM120YAA PUZ-SWM140YAA PUZ-SHWM140YAA

[LEGEND]

| SYMBOL | NAME | SYMBOL | NAME | SYMBOL | NAME |
|---|---|---|---|---|---|
| TB1 | Terminal Block <Power Supply> | TRS | Thermal Protector | SW4 | Switch <Function Switch> |
| TB2 | Terminal Block <Indoor/Outdoor> | LEV-A, LEV-B, LEV-C | Linear Expansion Valve | SW5 | Switch <Function Switch> |
| MC | Motor for Compressor | | | SW6 | Switch <Function Switch, Model Select> |
| MF1 | Fan Motor | ACL1, ACL2, ACL3, ACL4 | Reactor | SW7 | Switch <Function Switch> |
| 21S4 | Solenoid Valve (4-Way Valve) | | | SW8 | Switch <Function Switch> |
| 63H | High Pressure Switch | CY1, CY2 | Capacitor | SW9 | Switch <Function Switch> |
| 63HS | High Pressure Sensor | CK | Capacitor | SWP | Switch <Pump Down> |
| TH3 | Thermistor <Liquid> | RS | Rush Current Protect Resistor | CNDM | Connector <Connection for Option> |
| TH4 | Thermistor <Discharge> | P. B. | Power Circuit Board | SV1/CH | Connector <Connection for Option> |
| TH6 | Thermistor <2-Phase Pipe> | N. F. | Noise Filter Circuit Board | SV3/SS | Connector <Connection for Option> |
| TH7 | Thermistor <Ambient> | CONV. B. | Converter Circuit Board | CNM | Connector <Connection for Option> |
| TH8 | Thermistor <Heat Sink> | C. B. | Controller Circuit Board | F1, F2 | Fuse <T10AL250V> |
| TH32 | Thermistor <Suction> | SW1 | Switch <Manual Defrost, Defect History Record Reset, Refrigerant Address> | F3, F4 | Fuse <T6.3AL250V> |
| TH33 | Thermistor <Comp. Surface> | | | | |

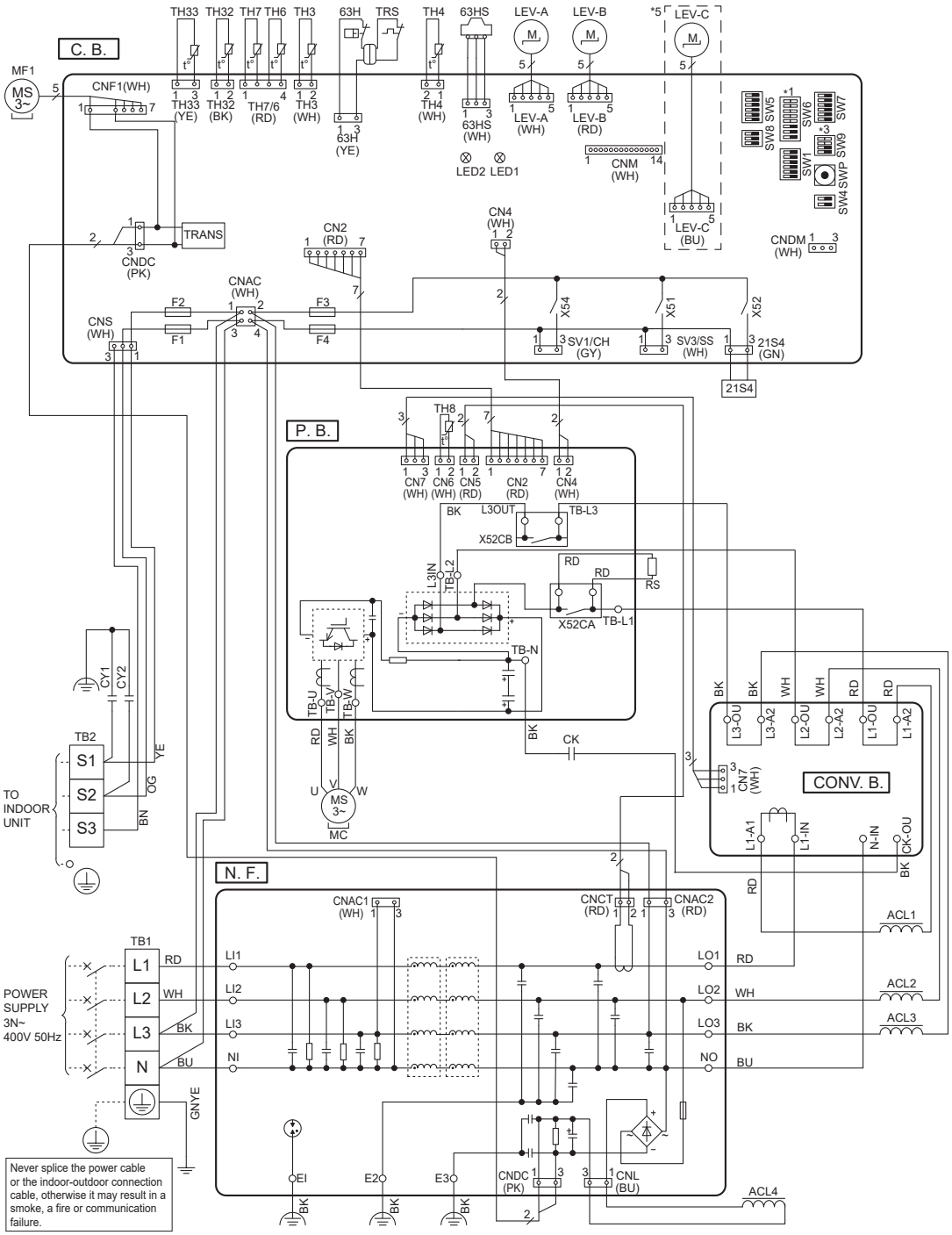


*1 MODEL SELECT
The black square (■) indicates a switch position.

| MODEL | SW6 *2 |
|---|---|
| 80Y | ON OFF 1 2 3 4 5 6 7 8 |
| 100Y | ON OFF 1 2 3 4 5 6 7 8 |
| 120Y | ON OFF 1 2 3 4 5 6 7 8 |
| 140Y | ON OFF 1 2 3 4 5 6 7 8 |

*2 SW6-1 to SW6-3 : Function Switch

*3 SW9-3 and SW9-4: Function Switch for SHWM only
Ambient temp. of ZUBADAN Flash Injection becomes effective.
The black square (■) indicates a switch position.

| Ambient temp. | SW9 *4 | Ambient temp. | SW9 *4 | Ambient temp. | SW9 *4 | Ambient temp. | SW9 *4 |
|---|---|---|---|---|---|---|---|
| –6°C or less (Default setting) | ON OFF 1 2 3 4 | –3°C or less | ON OFF 1 2 3 4 | 0°C or less | ON OFF 1 2 3 4 | 3°C or less | ON OFF 1 2 3 4 |

*4 SW9-1 and SW9-2 : Function Switch

*5 SHWM only

## ■ PUD-SWM60VAA(-BS) PUD-SHWM60VAA(-BS) PUD-SWM80VAA(-BS) PUD-SHWM80VAA(-BS) PUD-SWM100VAA(-BS) PUD-SHWM100VAA(-BS) PUD-SWM120VAA(-BS) PUD-SHWM120VAA(-BS)

| SYMBOL | NAME |
|---|---|
| TB1 | Terminal Block <Power Supply, Indoor/Outdoor> |
| MC | Motor for Compressor |
| MF1 | Fan Motor |
| 21S4 | Solenoid Valve (4-Way Valve) |
| 63H | High Pressure Switch |
| 63HS | High Pressure Sensor |
| TH3 | Thermistor <Liquid> |
| TH4 | Thermistor <Discharge> |
| TH6 | Thermistor <2-Phase Pipe> |
| TH7 | Thermistor <Ambient> |
| TH8 | Thermistor <Heat Sink> |
| TH32 | Thermistor <Suction> |
| TH33 | Thermistor <Comp. Surface> |
| LEV-A, LEV-C | Linear Expansion Valve |
| DCL1, DCL2, DCL3 | Reactor |
| CY1, CY2 | Capacitor |
| CX1 | Capacitor |

| SYMBOL | NAME |
|---|---|
| P.B. | Power Circuit Board |
| C.B. | Controller Circuit Board |
| SW1 | Switch <Manual Defrost, Defect History Record Reset, Refrigerant Address> |
| SW4 | Switch <Function Switch> |
| SW5 | Switch <Function Switch> |
| SW6 | Switch <Function Switch, Model Select> |
| SW7 | Switch <Function Switch> |
| SW8 | Switch <Function Switch> |
| SW9 | Switch <Function Switch> |
| SWP | Switch <Pump Down> |
| CNDM | Connector <Connection for Option> |
| SV1/CH | Connector <Connection for Option> |
| SV3/SS | Connector <Connection for Option> |
| CNM | Connector <Connection for Option> |
| F1, F2, F3, F4 | Fuse <T6.3AL250V> |

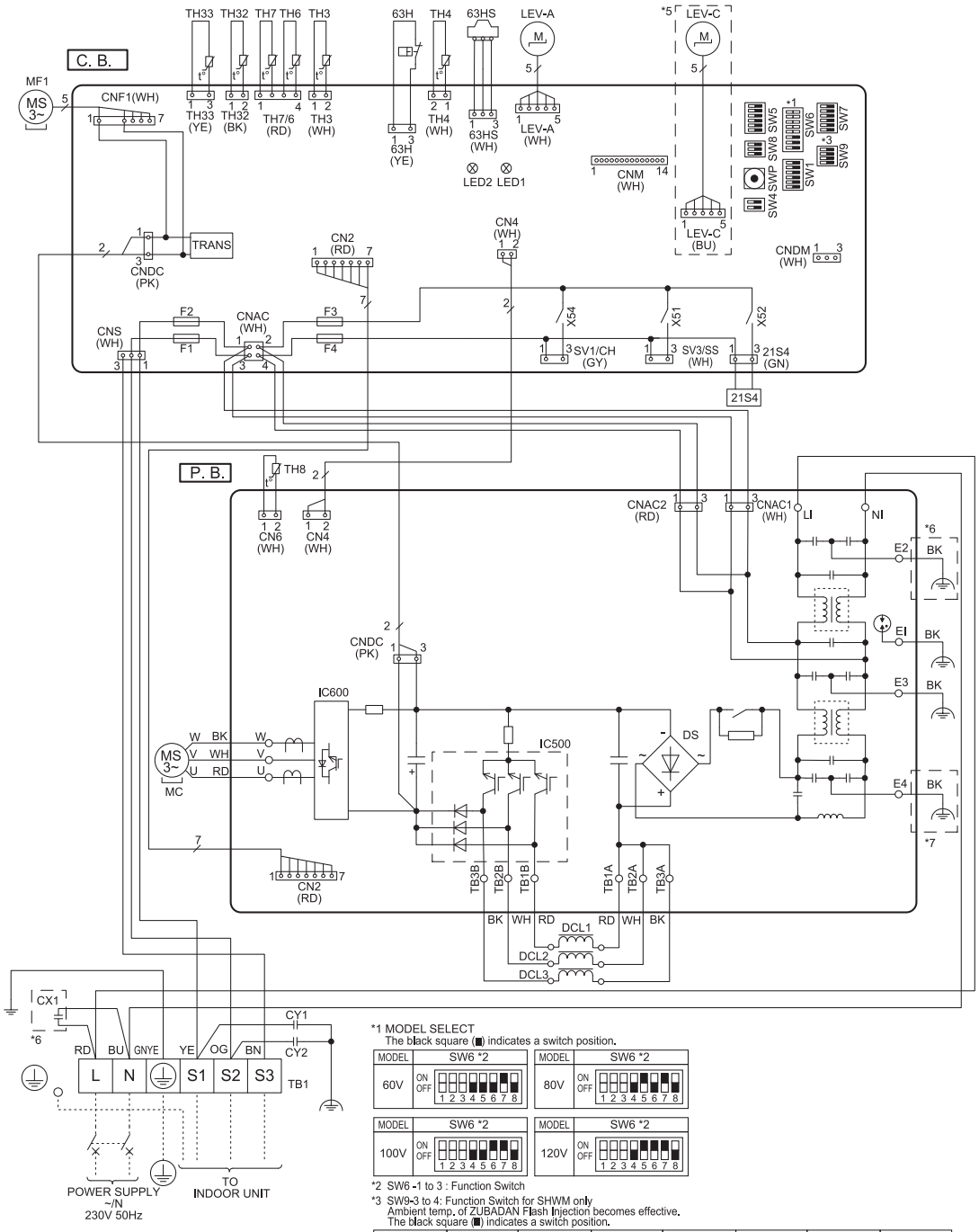


Never splice the power cable or the indoor-outdoor connection cable, otherwise it may result in a smoke, a fire or communication failure.

*1 MODEL SELECT
The black square (■) indicates a switch position.

| MODEL | SW6 *2 |
|---|---|
| 60V | ON OFF 1 2 3 4 5 6 7 8 |
| 80V | ON OFF 1 2 3 4 5 6 7 8 |
| 100V | ON OFF 1 2 3 4 5 6 7 8 |
| 120V | ON OFF 1 2 3 4 5 6 7 8 |

*2 SW6 -1 to 3 : Function Switch
*3 SW9-3 to 4: Function Switch for SHWM only
Ambient temp. of ZUBADAN Flash Injection becomes effective.
The black square (■) indicates a switch position.

| Ambient temp. | SW9 *4 | Ambient temp. | SW9 *4 | Ambient temp. | SW9 *4 | Ambient temp. | SW9 *4 |
|---|---|---|---|---|---|---|---|
| −6°C or less (Default setting) | ON OFF 1 2 3 4 | −3°C or less | ON OFF 1 2 3 4 | 0°C or less | ON OFF 1 2 3 4 | 3°C or less | ON OFF 1 2 3 4 |

*4 SW9-1 to 2 : Function Switch
*5 SHWM only
*6 SWM60/80 SHWM60/80 only
*7 SWM100/120 SHWM100/120 only

## ■ PUD-SHWM140VAA(-BS)

| SYMBOL | NAME | SYMBOL | NAME |
|---|---|---|---|
| TB1 | Terminal Block <Power Supply, Indoor/Outdoor> | N. F. | Noise Filter Circuit Board |
| MC | Motor for Compressor | C. B. | Controller Circuit Board |
| MF1 | Fan Motor | SW1 | Switch <Manual Defrost, Defect History Record Reset, Refrigerant Address> |
| 21S4 | Solenoid Valve (4-Way Valve) | SW4 | Switch <Function Switch> |
| 63H | High Pressure Switch | SW5 | Switch <Function Switch> |
| 63HS | High Pressure Sensor | SW6 | Switch <Function Switch, Model Select> |
| TH3 | Thermistor <Liquid> | SW7 | Switch <Function Switch> |
| TH4 | Thermistor <Discharge> | SW8 | Switch <Function Switch> |
| TH6 | Thermistor <2-Phase Pipe> | SW9 | Switch <Function Switch> |
| TH7 | Thermistor <Ambient> | SWP | Switch <Pump Down> |
| TH8 | Thermistor <Heat Sink> | CNDM | Connector <Connection for Option> |
| TH32 | Thermistor <Suction> | SV1/CH | Connector <Connection for Option> |
| TH33 | Thermistor <Comp. Surface> | SV3/SS | Connector <Connection for Option> |
| LEV-A, LEV-C | Linear Expansion Valve | CNM | Connector <Connection for Option> |
| DCL1, DCL2, DCL3 | Reactor | F1, F2, F3, F4 | Fuse <T6.3AL250V> |
| CY1, CY2 | Capacitor | | |
| P. B. | Power Circuit Board | | |

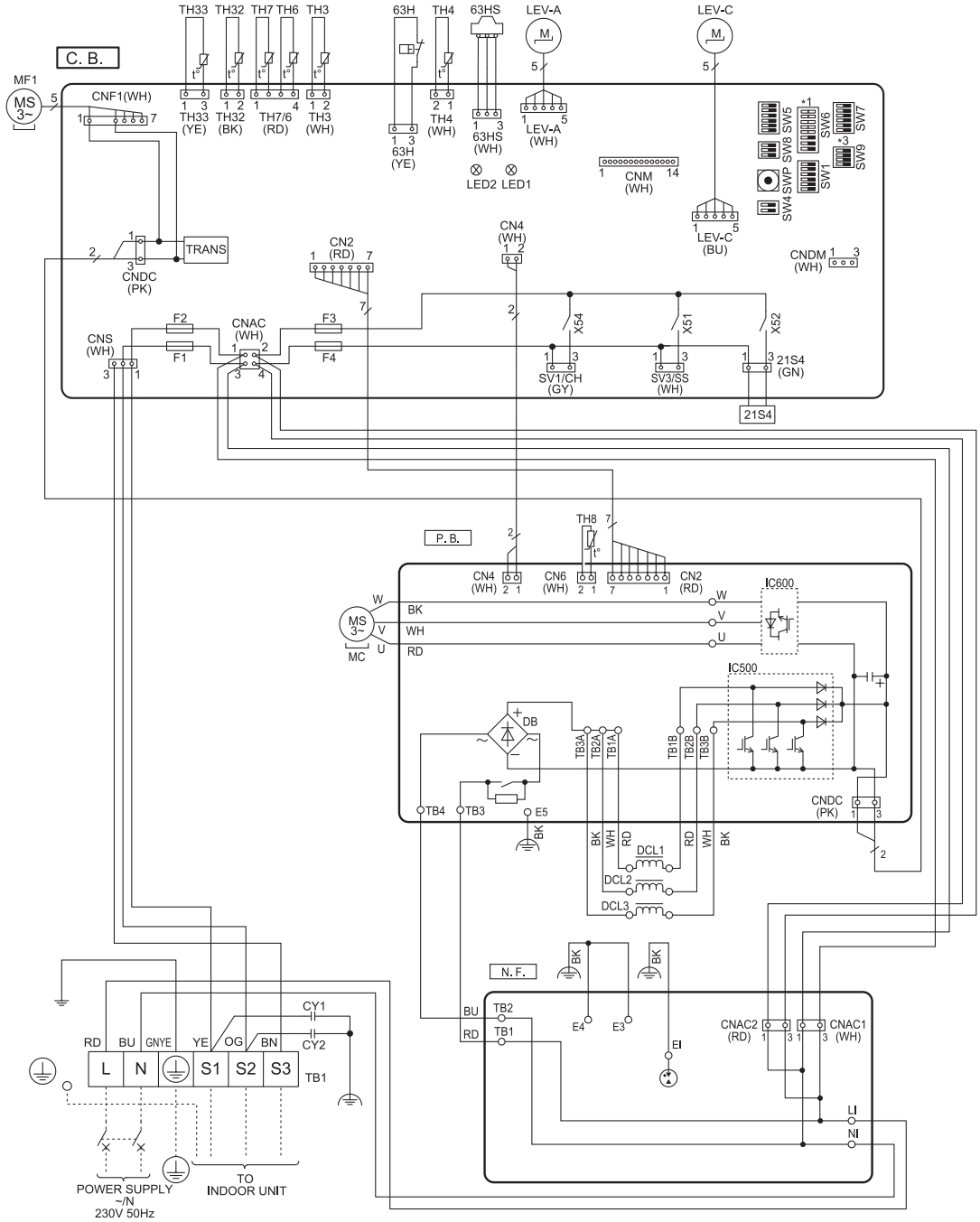


Never splice the power cable or the indoor-outdoor connection cable, otherwise it may result in a smoke, a fire or communication failure.

*1 MODEL SELECT
The black square (■) indicates a switch position.

| MODEL | SW6 *2 |
|---|---|
| 140V | ON / OFF 1 2 3 4 5 6 7 8 |

*2 SW6 -1 to 3 : Function Switch

*3 SW9-3 to 4: Function Switch
Ambient temp. of ZUBADAN Flash Injection becomes effective.
The black square (■) indicates a switch position.

| Ambient temp. | SW9 *4 | Ambient temp. | SW9 *4 | Ambient temp. | SW9 *4 | Ambient temp. | SW9 *4 |
|---|---|---|---|---|---|---|---|
| –6°C or less (Default setting) | ON / OFF 1 2 3 4 | –3°C or less | ON / OFF 1 2 3 4 | 0°C or less | ON / OFF 1 2 3 4 | 3°C or less | ON / OFF 1 2 3 4 |

*4 SW9-1 to 2 : Function Switch

## ■ PUD-SWM80YAA(-BS) PUD-SWM100YAA(-BS) PUD-SWM120YAA(-BS) PUD-SHWM80YAA(-BS) PUD-SHWM100YAA(-BS) PUD-SHWM120YAA(-BS) PUD-SHWM140YAA(-BS)

| SYMBOL | NAME | SYMBOL | NAME | SYMBOL | NAME |
|---|---|---|---|---|---|
| TB1 | Terminal Block <Power Supply> | LEV-A, LEV-C | Linear Expansion Valve | SW6 | Switch <Function Switch, Model Select> |
| TB2 | Terminal Block <Indoor/Outdoor> | ACL1, ACL2, ACL3, ACL4 | Reactor | SW7 | Switch <Function Switch> |
| MC | Motor for Compressor | CY1, CY2 | Capacitor | SW8 | Switch <Function Switch> |
| MF1 | Fan Motor | CK | Capacitor | SW9 | Switch <Function Switch> |
| 21S4 | Solenoid Valve (4-Way Valve) | RS | Rush Current Protect Resistor | SWP | Switch <Pump Down> |
| 63H | High Pressure Switch | P. B. | Power Circuit Board | CNDM | Connector <Connection for Option> |
| 63HS | High Pressure Sensor | N. F. | Noise Filter Circuit Board | SV1/CH | Connector <Connection for Option> |
| TH3 | Thermistor <Liquid> | CONV. B. | Converter Circuit Board | SV3/SS | Connector <Connection for Option> |
| TH4 | Thermistor <Discharge> | C. B. | Controller Circuit Board | CNM | Connector <Connection for Option> |
| TH6 | Thermistor <2-Phase Pipe> | SW1 | Switch <Manual Defrost, Defect History Record Reset, Refrigerant Address> | F1, F2, F3, F4 | Fuse <T6.3AL250V> |
| TH7 | Thermistor <Ambient> | | | | |
| TH8 | Thermistor <Heat Sink> | | | | |
| TH32 | Thermistor <Suction> | SW4 | Switch <Function Switch> | | |
| TH33 | Thermistor <Comp. Surface> | SW5 | Switch <Function Switch> | | |

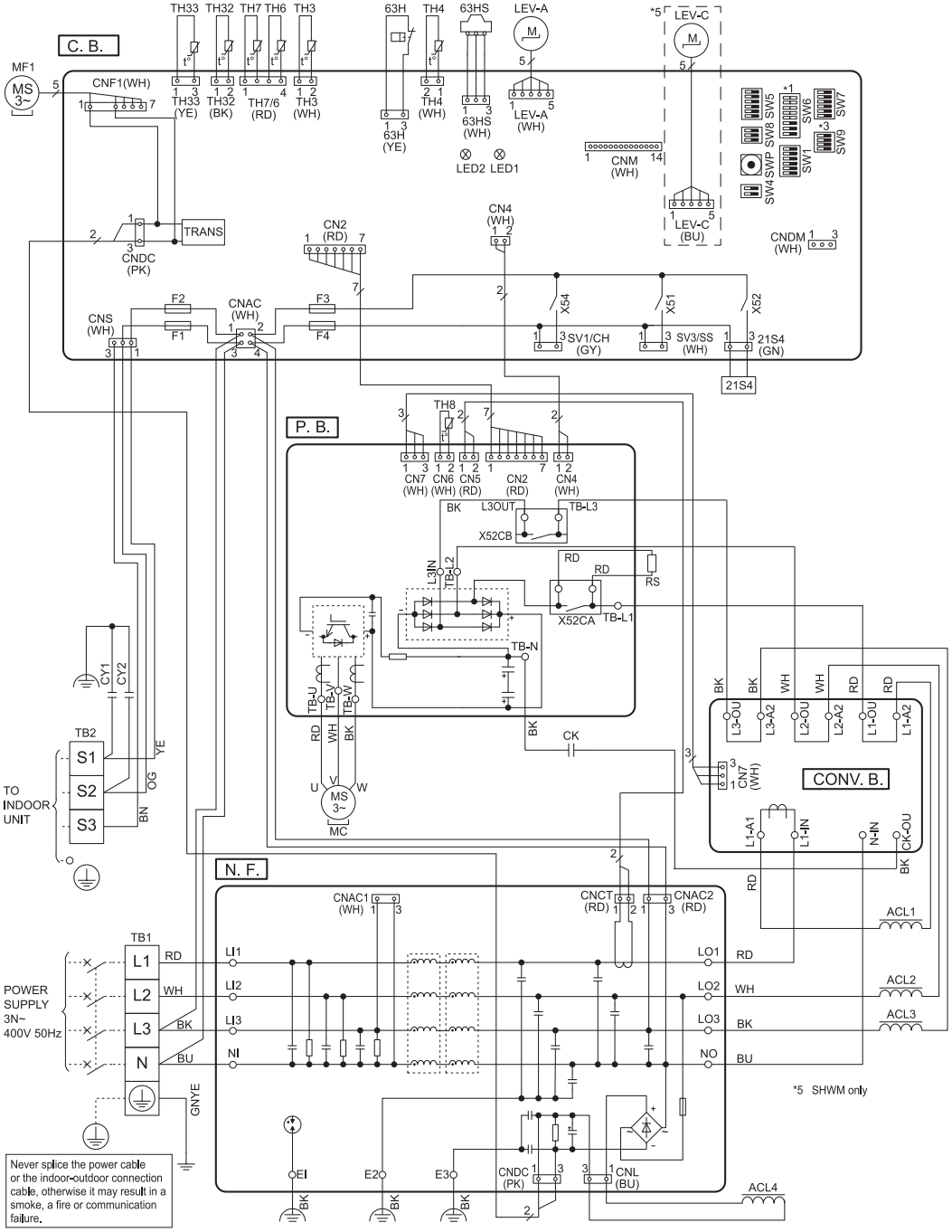


*1 MODEL SELECT
The black square (■) indicates a switch position.

| MODEL | SW6 *2 |
|---|---|
| 80Y | ON OFF 1 2 3 4 5 6 7 8 |
| 100Y | ON OFF 1 2 3 4 5 6 7 8 |
| 120Y | ON OFF 1 2 3 4 5 6 7 8 |
| 140Y | ON OFF 1 2 3 4 5 6 7 8 |

*2 SW6 -1 to 3 : Function Switch

*3 SW9-3 to 4: Function Switch for SHWM only
Ambient temp. of ZUBADAN Flash Injection becomes effective.
The black square (■) indicates a switch position.

| Ambient temp. | SW9 *4 | Ambient temp. | SW9 *4 | Ambient temp. | SW9 *4 | Ambient temp. | SW9 *4 |
|---|---|---|---|---|---|---|---|
| –6°C or less (Default setting) | ON OFF 1 2 3 4 | –3°C or less | ON OFF 1 2 3 4 | 0°C or less | ON OFF 1 2 3 4 | 3°C or less | ON OFF 1 2 3 4 |

*4 SW9-1 to 2 : Function Switch

## ■ PXZ-4F75VG

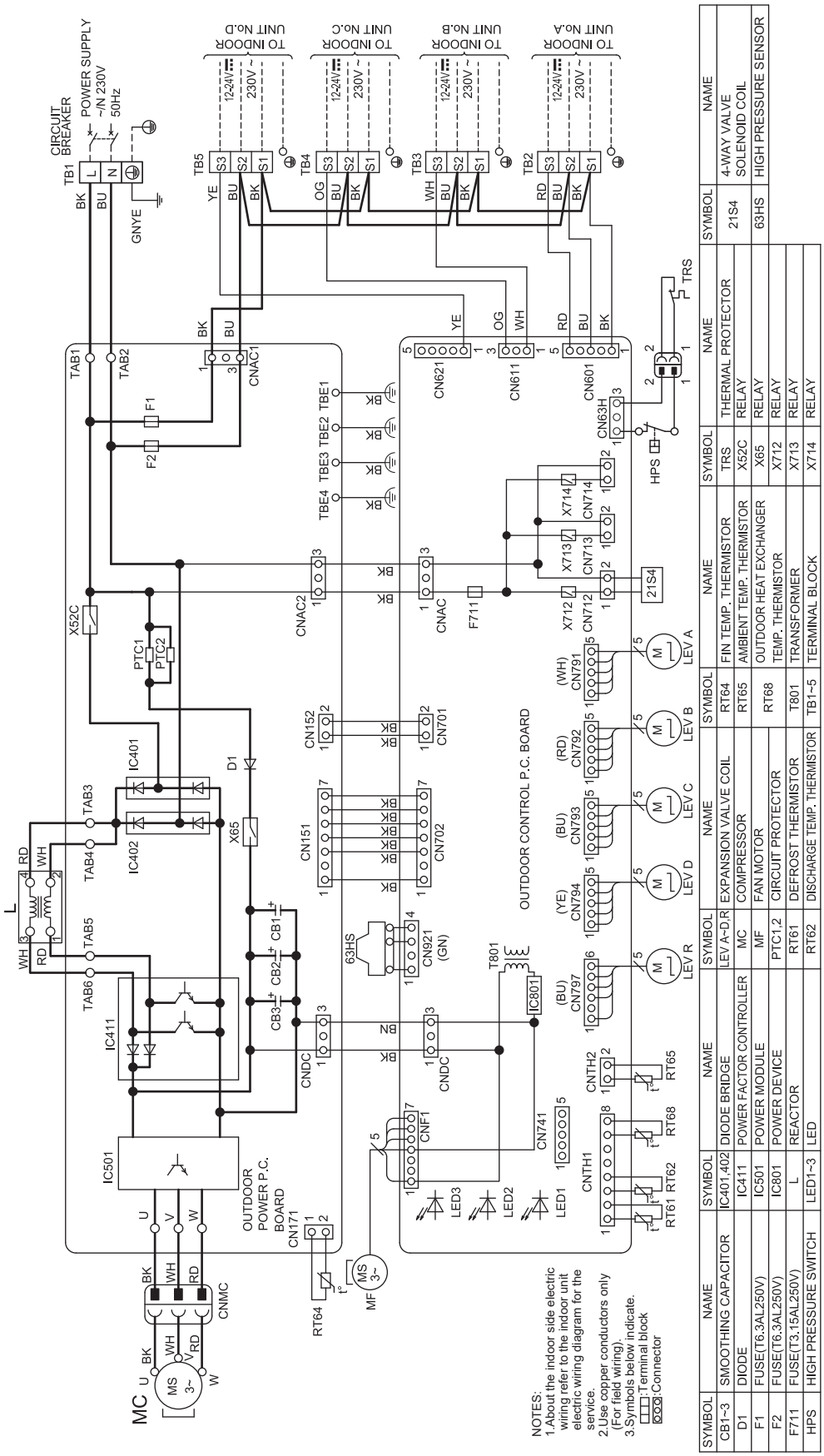


| SYMBOL | NAME | SYMBOL | NAME | SYMBOL | NAME | SYMBOL | NAME | SYMBOL | NAME |
|---|---|---|---|---|---|---|---|---|---|
| CB1~3 | SMOOTHING CAPACITOR | IC401,402 | DIODE BRIDGE | LEV A~D,R | EXPANSION VALVE COIL | RT64 | FIN TEMP. THERMISTOR | TRS | THERMAL PROTECTOR |
| D1 | DIODE | IC411 | POWER FACTOR CONTROLLER | MC | COMPRESSOR | RT65 | AMBIENT TEMP. THERMISTOR | X52C | RELAY |
| F1 | FUSE(T6.3AL250V) | IC501 | POWER MODULE | MF | FAN MOTOR | RT68 | OUTDOOR HEAT EXCHANGER TEMP. THERMISTOR | X65 | RELAY |
| F2 | FUSE(T6.3AL250V) | IC801 | POWER DEVICE | PTC1,2 | CIRCUIT PROTECTOR | | | X712 | RELAY |
| F711 | FUSE(T3.15AL250V) | L | REACTOR | RT61 | DEFROST THERMISTOR | T801 | TRANSFORMER | X713 | RELAY |
| HPS | HIGH PRESSURE SWITCH | LED1~3 | LED | RT62 | DISCHARGE TEMP. THERMISTOR | TB1~5 | TERMINAL BLOCK | X714 | RELAY |
| | | | | | | | | 21S4 | 4-WAY VALVE SOLENOID COIL |
| | | | | | | | | 63HS | HIGH PRESSURE SENSOR |

## ■ PXZ-5F85VG

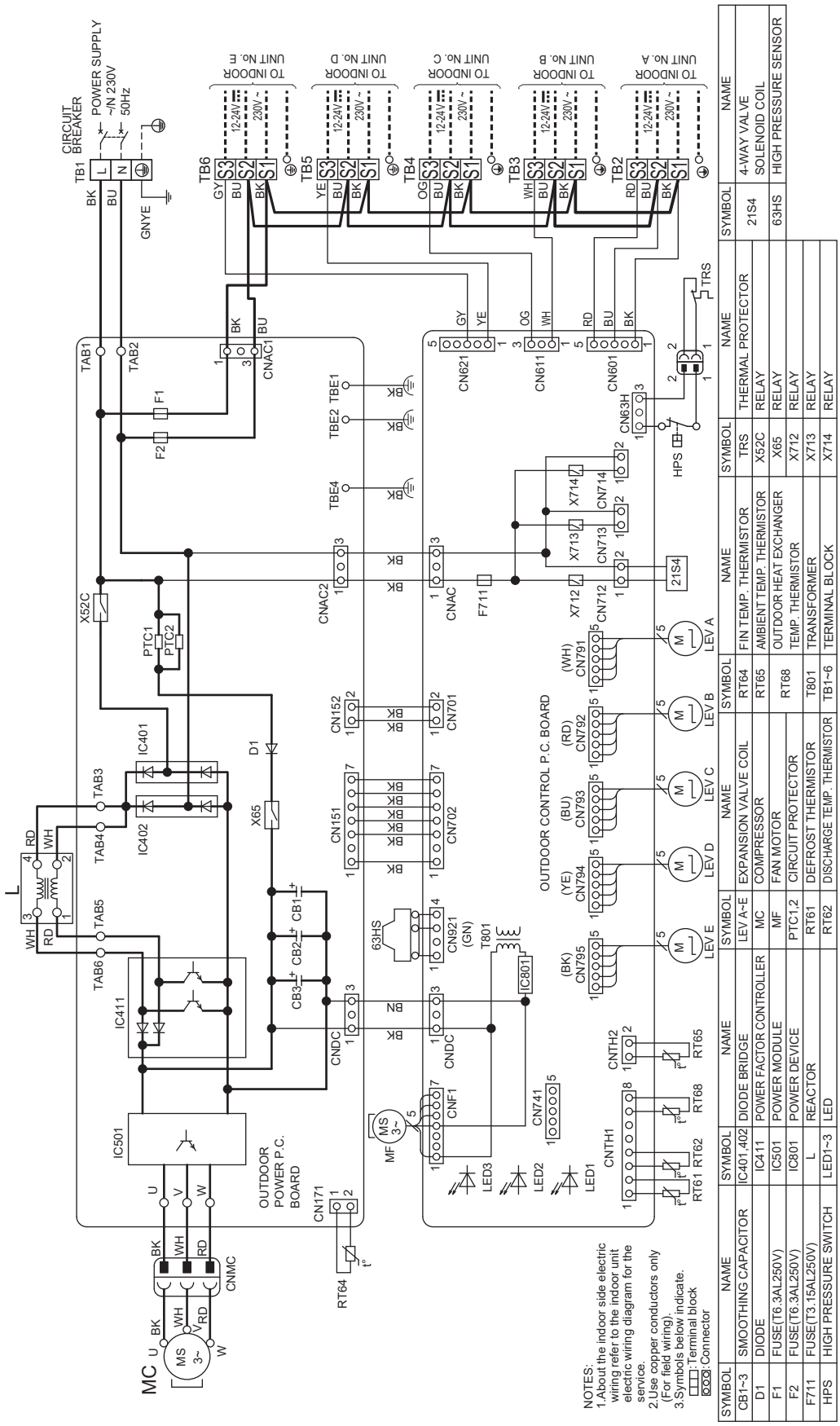


| SYMBOL | NAME | SYMBOL | NAME | SYMBOL | NAME | SYMBOL | NAME |
|---|---|---|---|---|---|---|---|
| CB1~3 | SMOOTHING CAPACITOR | IC401,402 | DIODE BRIDGE | LEV A~E | EXPANSION VALVE COIL | RT64 | FIN TEMP. THERMISTOR |
| D1 | DIODE | IC411 | POWER FACTOR CONTROLLER | MC | COMPRESSOR | RT65 | AMBIENT TEMP. THERMISTOR |
| F1 | FUSE(T6.3AL250V) | IC501 | POWER MODULE | MF | FAN MOTOR | RT68 | OUTDOOR HEAT EXCHANGER TEMP. THERMISTOR |
| F2 | FUSE(T6.3AL250V) | IC801 | POWER DEVICE | PTC1,2 | CIRCUIT PROTECTOR | | |
| F711 | FUSE(T3.15AL250V) | L | REACTOR | RT61 | DEFROST THERMISTOR | T801 | TRANSFORMER |
| HPS | HIGH PRESSURE SWITCH | LED1~3 | LED | RT62 | DISCHARGE TEMP. THERMISTOR | TB1~6 | TERMINAL BLOCK |

| SYMBOL | NAME | SYMBOL | NAME |
|---|---|---|---|
| TRS | THERMAL PROTECTOR | 21S4 | 4-WAY VALVE SOLENOID COIL |
| X52C | RELAY | 63HS | HIGH PRESSURE SENSOR |
| X65 | RELAY | | |
| X712 | RELAY | | |
| X713 | RELAY | | |
| X714 | RELAY | | |

## (1)Packaged-type units

### ■ PUZ-WM50VHA(-BS)

Unit : mm

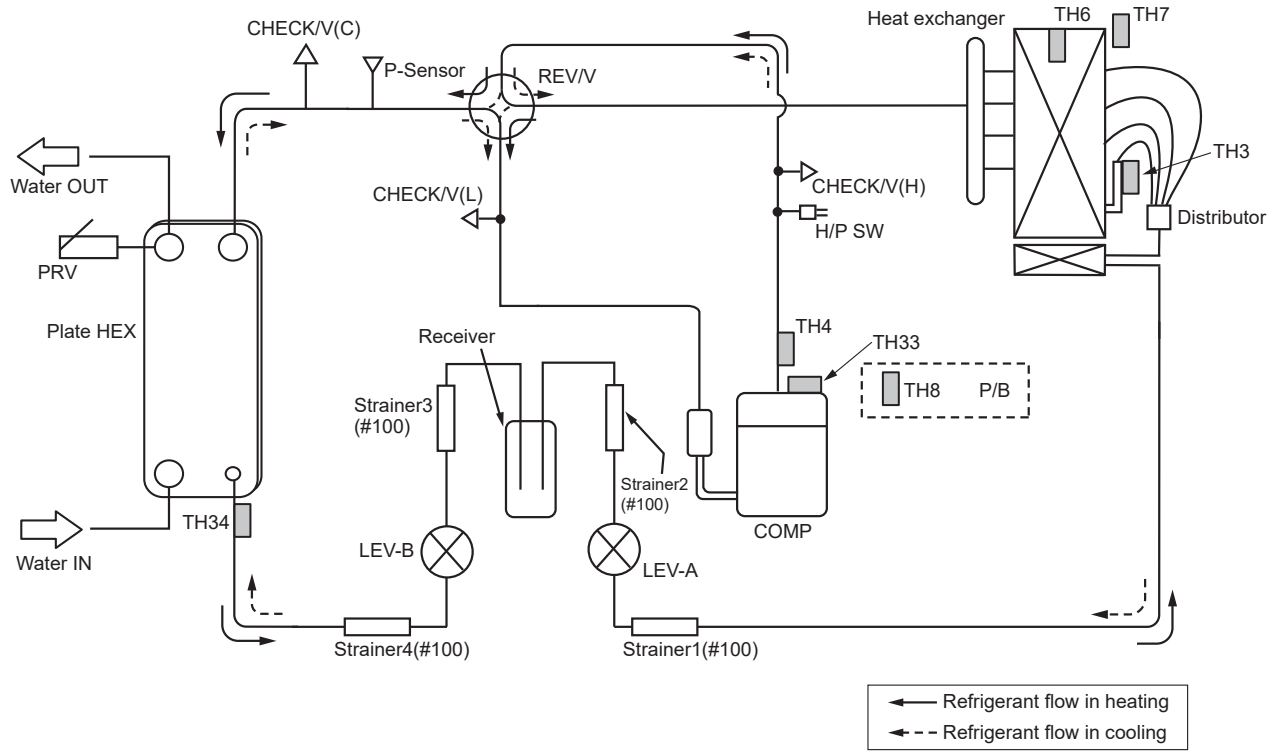


### ■ PUZ-WM60VAA(-BS) PUZ-WM85VAA(-BS)

Unit : mm

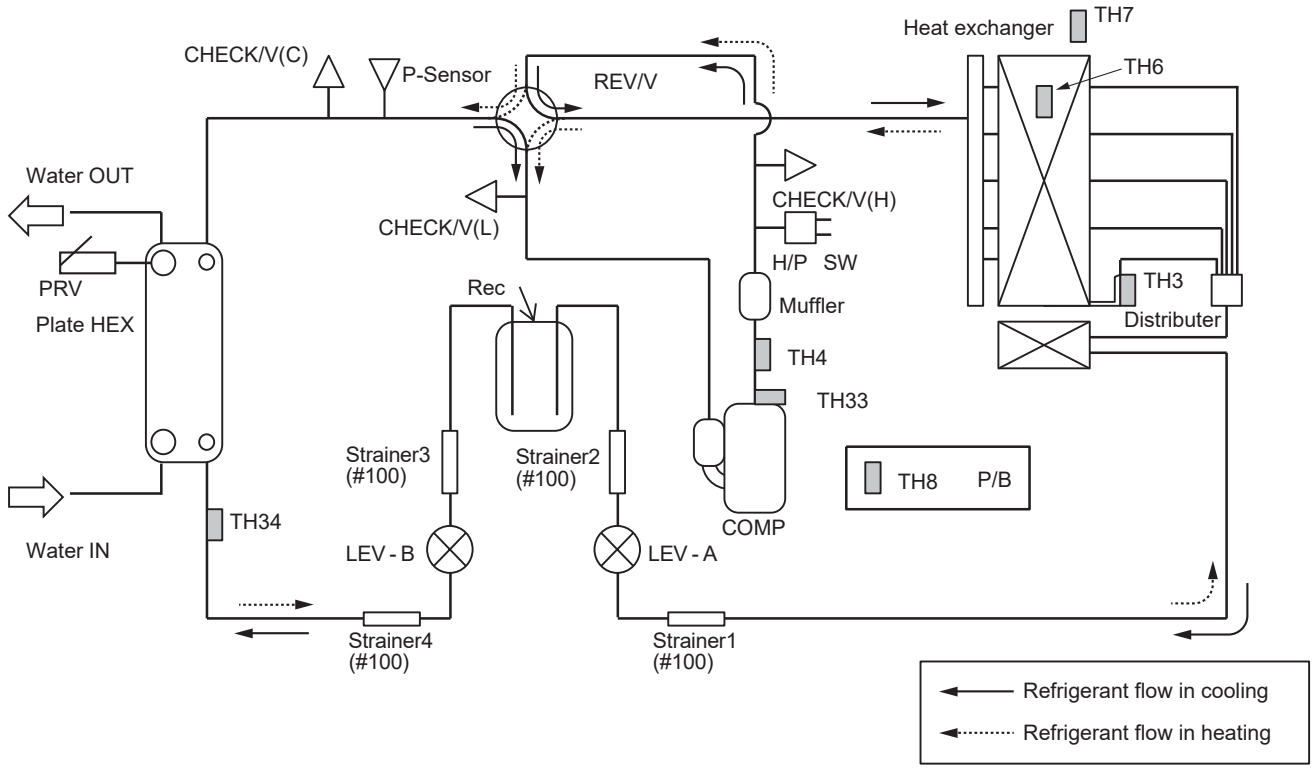

■ **PUZ-WM112VAA(-BS)**
**PUZ-WM112YAA(-BS)**

**Unit : mm**

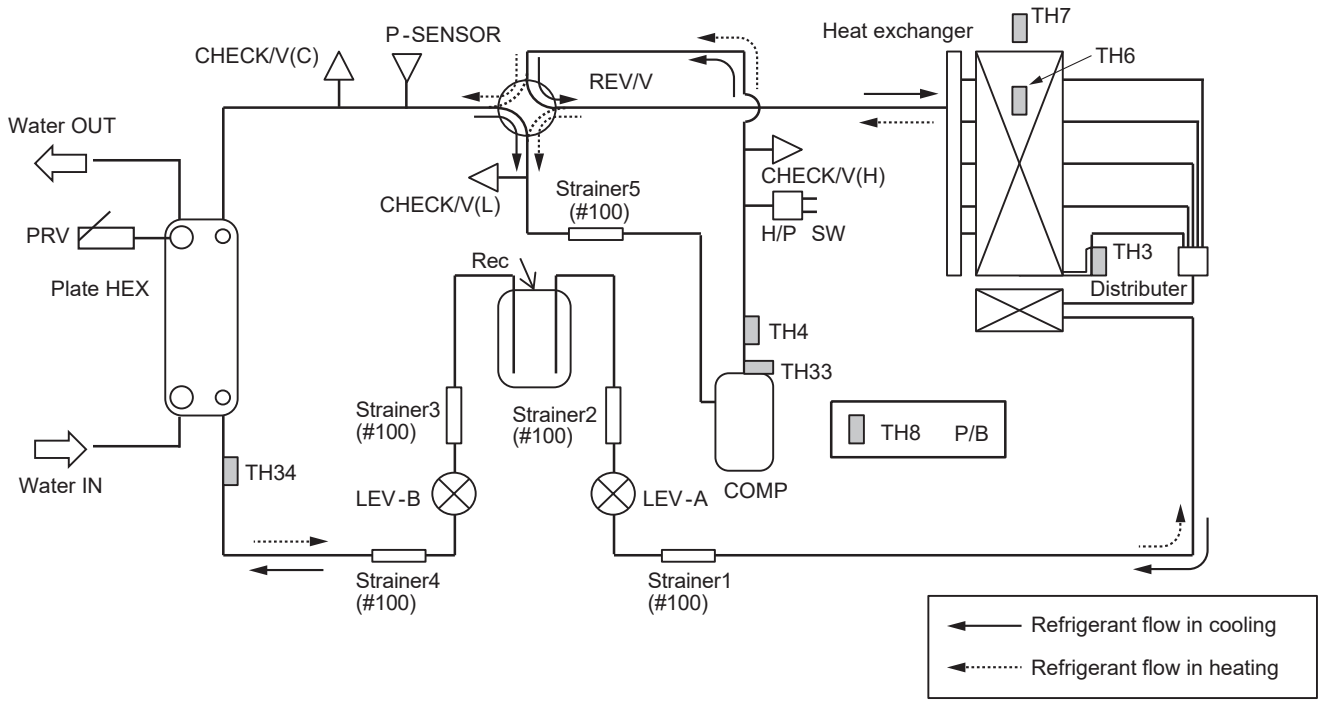


■ **PUZ-HWM140VHA(-BS)**
**PUZ-HWM140YHA(-BS)**

**Unit : mm**

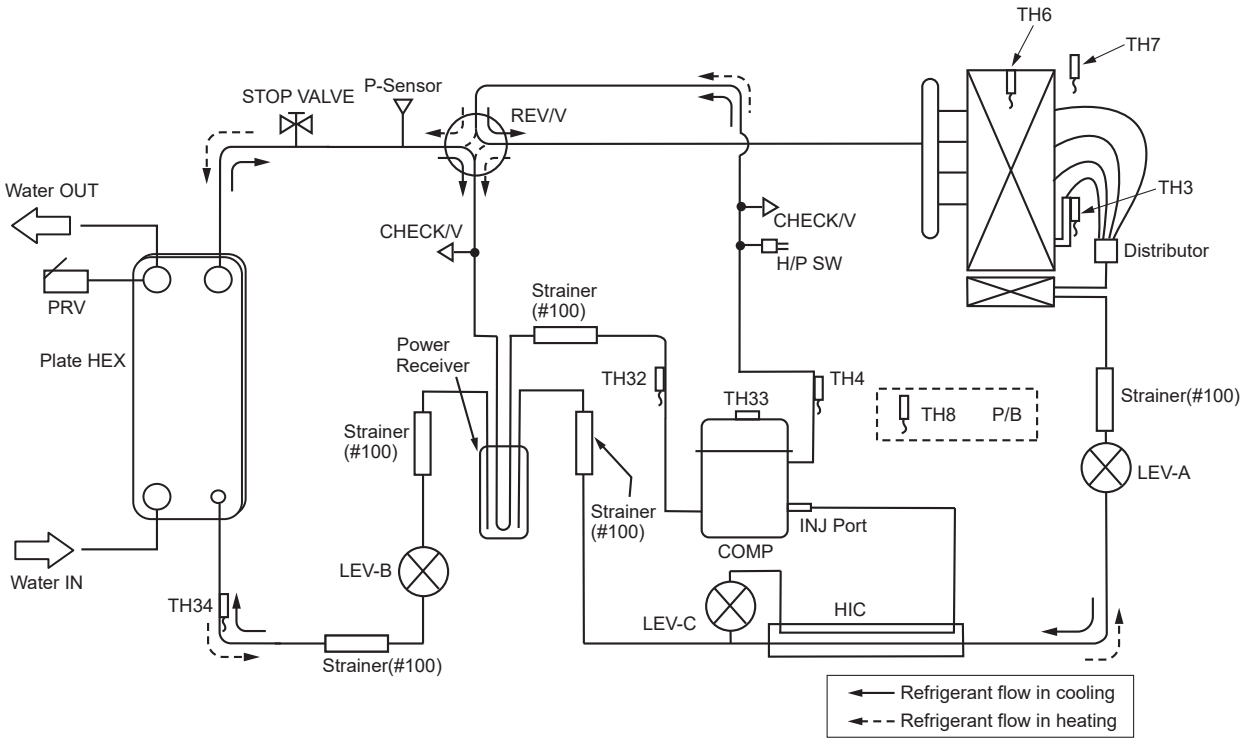

## (2)Split-type units

■ **SUZ-SWM40VA**
**SUZ-SWM60VA**
**SUZ-SWM80VA**

**Unit : mm**

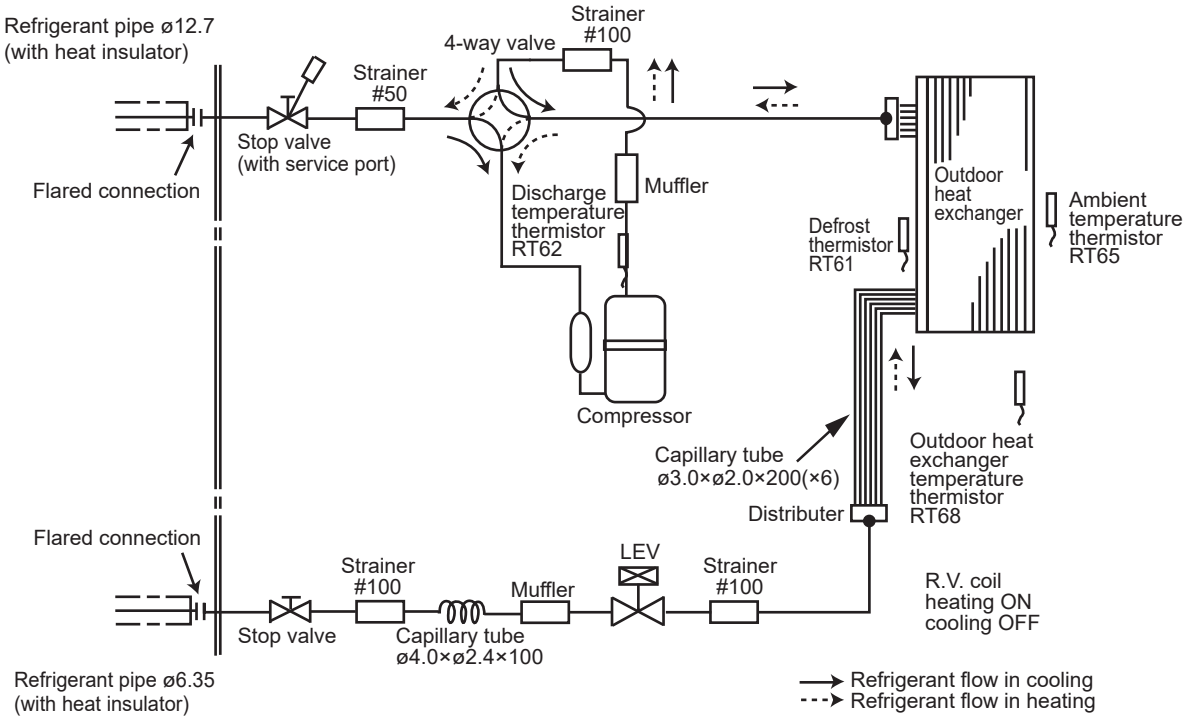


■ **SUZ-SWM30VA** **SUZ-SHWM30VAH**
**SUZ-SWM40VA2** **SUZ-SWM40VA2-SC**
**SUZ-SHWM40VAH** **SUZ-SHWM40VAH-SC**
**SUZ-SWM60VA2** **SUZ-SWM60VA2-SC**

**Unit : mm**

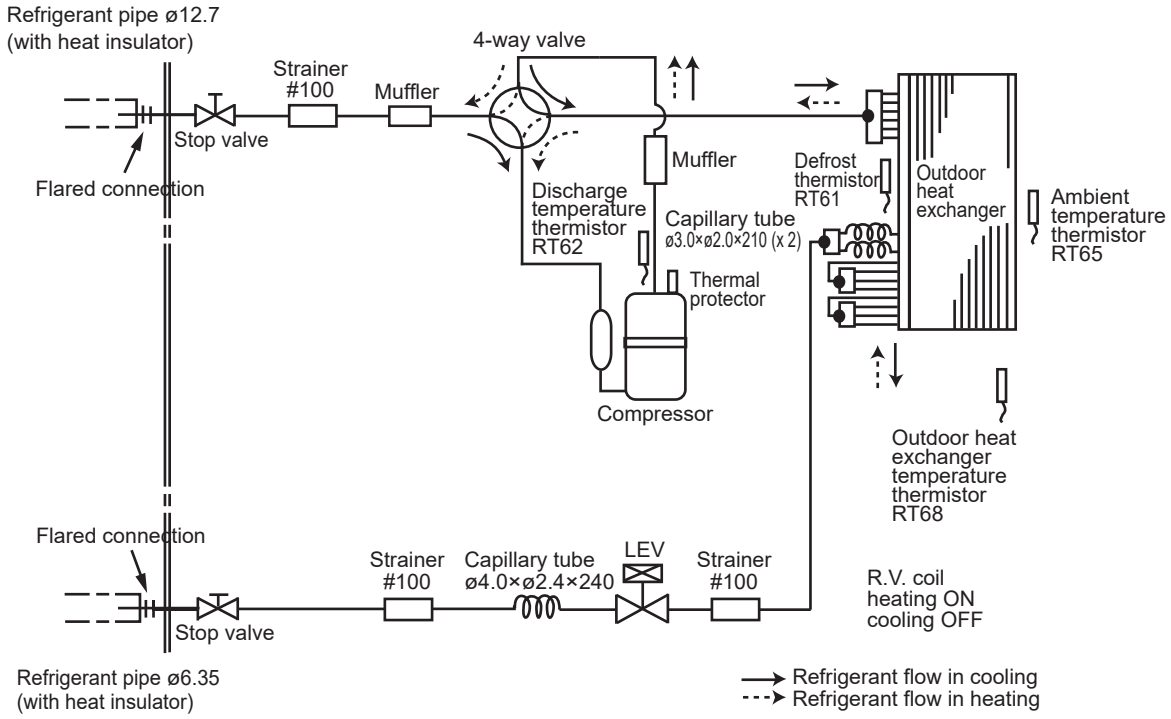

■ **SUZ-SHWM60VAH** **SUZ-SHWM60VAH-SC**
**SUZ-SWM80VA2** **SUZ-SWM80VAH2**
**SUZ-SWM100VA** **SUZ-SWM100VAH**

**Unit : mm**

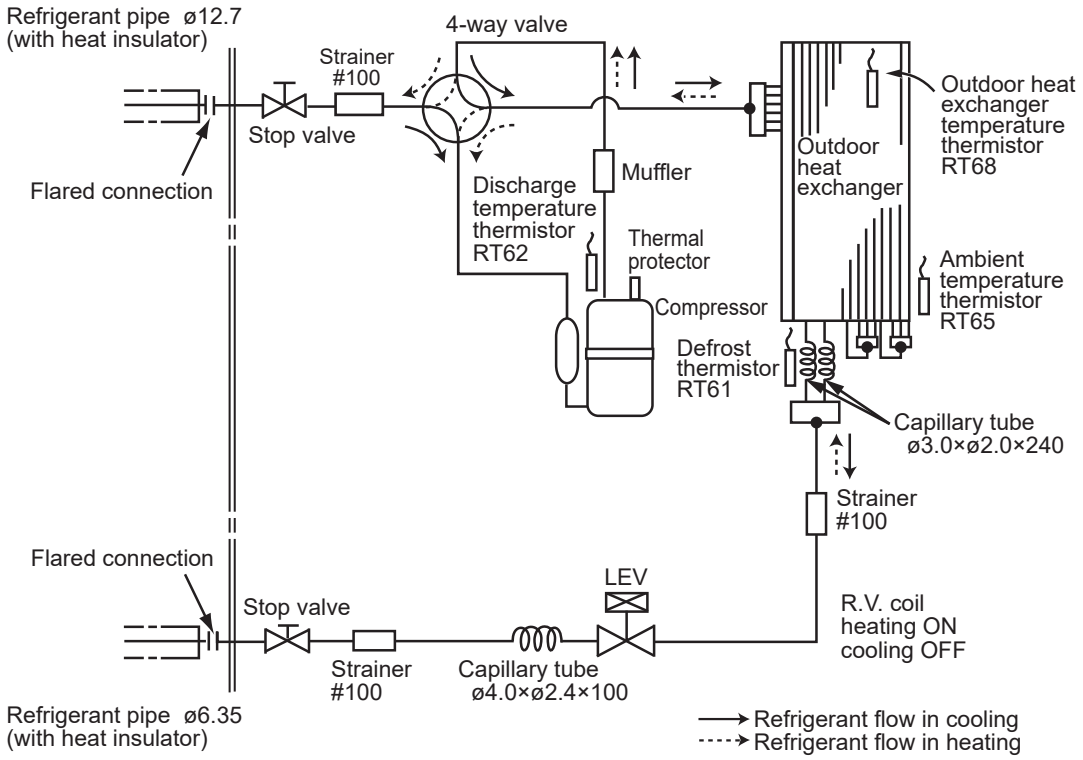


■ **PUZ-SWM60VAA** **PUZ-SWM80VAA** **PUZ-SWM100VAA** **PUZ-SWM120VAA** **PUZ-SWM140VAA**
**PUZ-SWM80YAA** **PUZ-SWM100YAA** **PUZ-SWM120YAA** **PUZ-SWM140YAA**

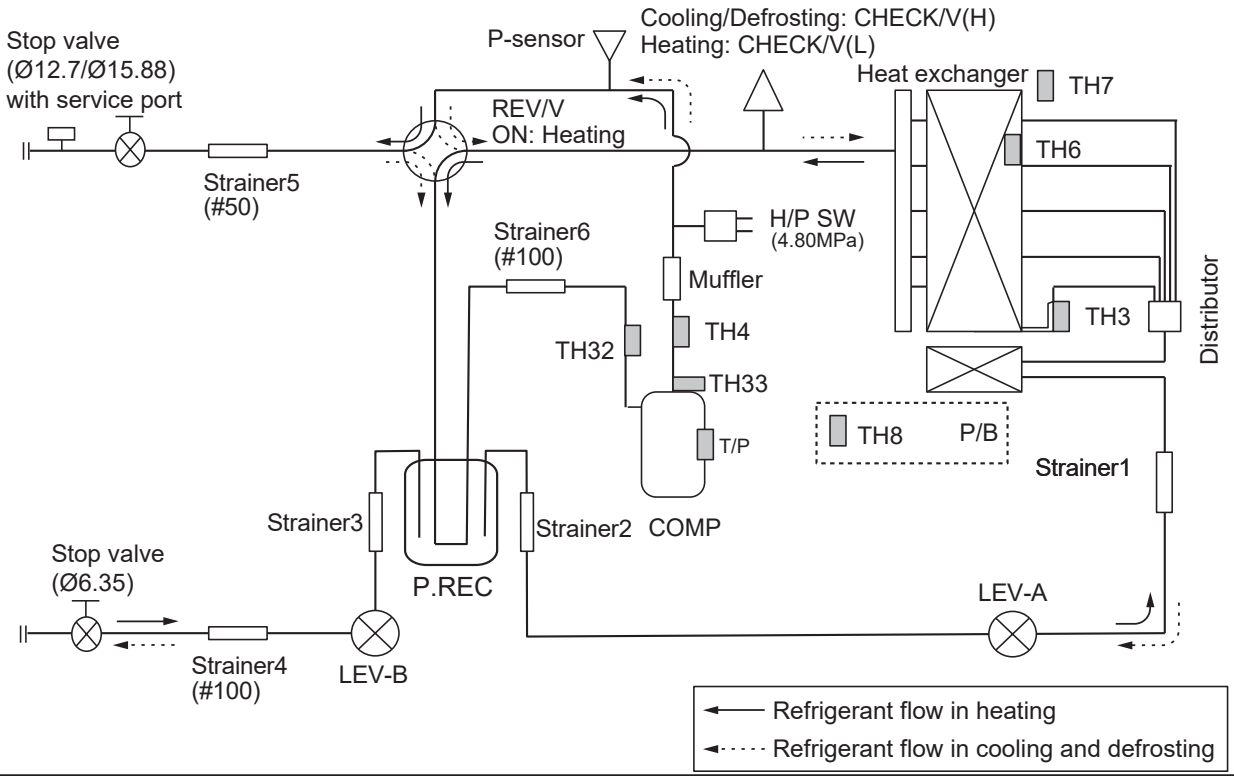

■ **PUZ-SHWM60VAA PUZ-SHWM80VAA PUZ-SHWM100VAA PUZ-SHWM120VAA PUZ-SHWM140VAA**
**PUZ-SHWM80YAA PUZ-SHWM100YAA PUZ-SHWM120YAA PUZ-SHWM140YAA**

**unit: mm (in)**

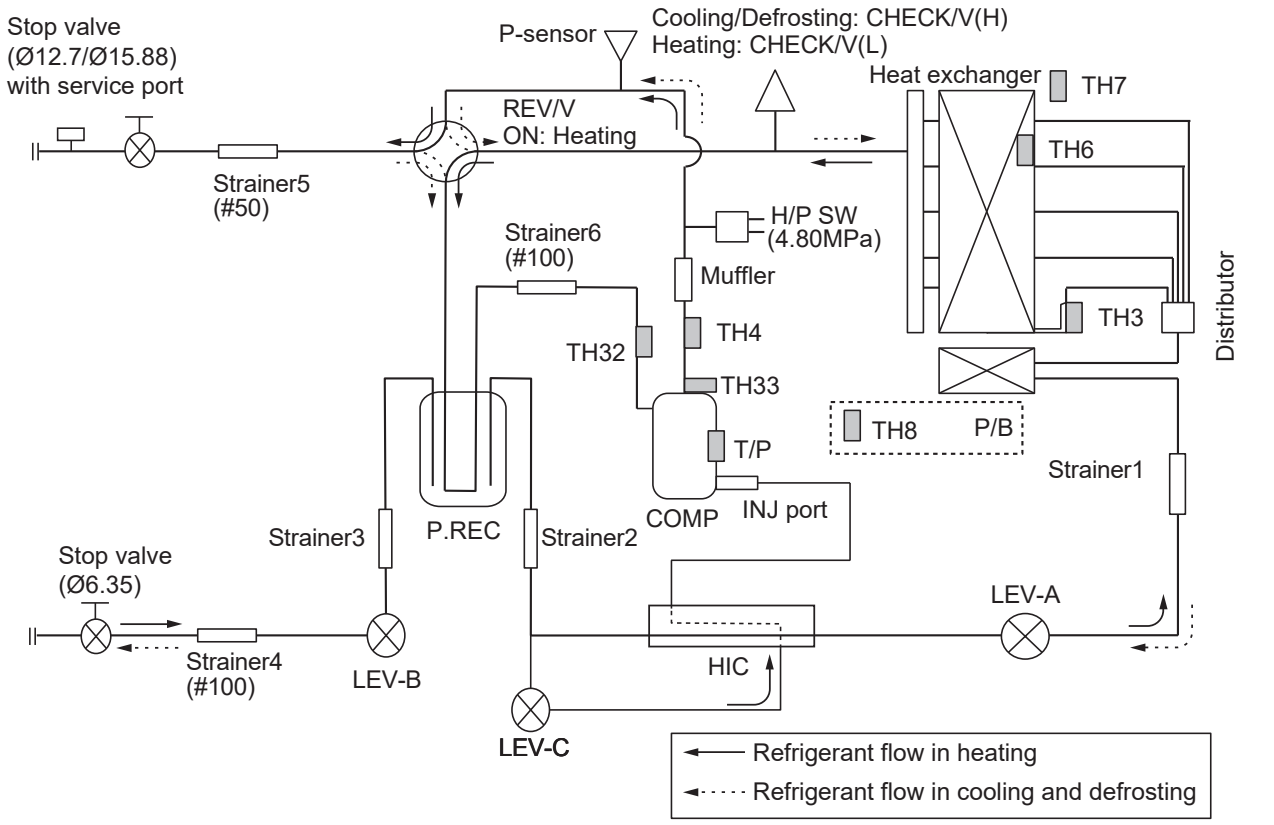


■ **PUD-SWM60VAA(-BS) PUD-SWM80VAA(-BS) PUD-SWM80YAA(-BS) PUD-SWM100VAA(-BS)**
**PUD-SWM100YAA(-BS) PUD-SWM120VAA(-BS) PUD-SWM120YAA(-BS)**

**unit: mm (in)**

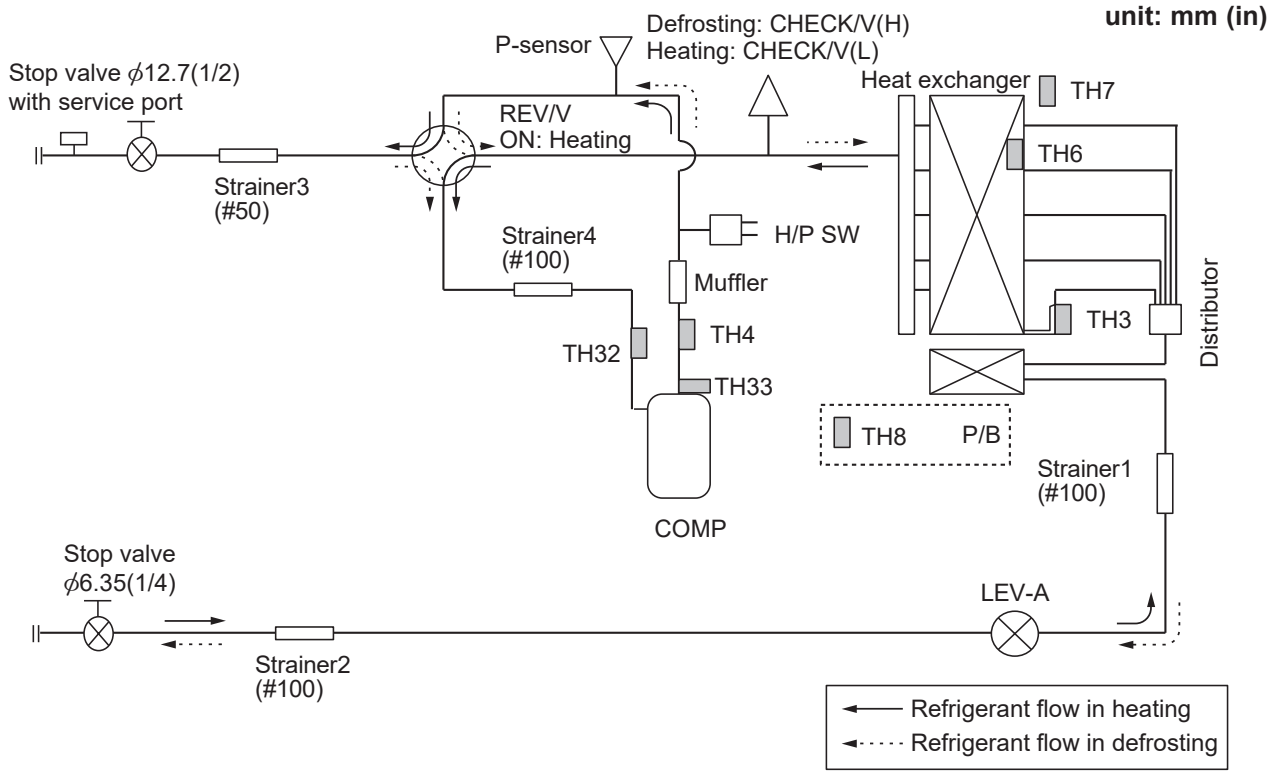

■ **PUD-SHWM60VAA(-BS) PUD-SHWM80VAA(-BS) PUD-SHWM80YAA(-BS) PUD-SHWM100VAA(-BS) PUD-SHWM100YAA(-BS) PUD-SHWM120VAA(-BS) PUD-SHWM120YAA(-BS) PUD-SHWM140VAA(-BS) PUD-SHWM140YAA(-BS)**

**unit: mm (in)**

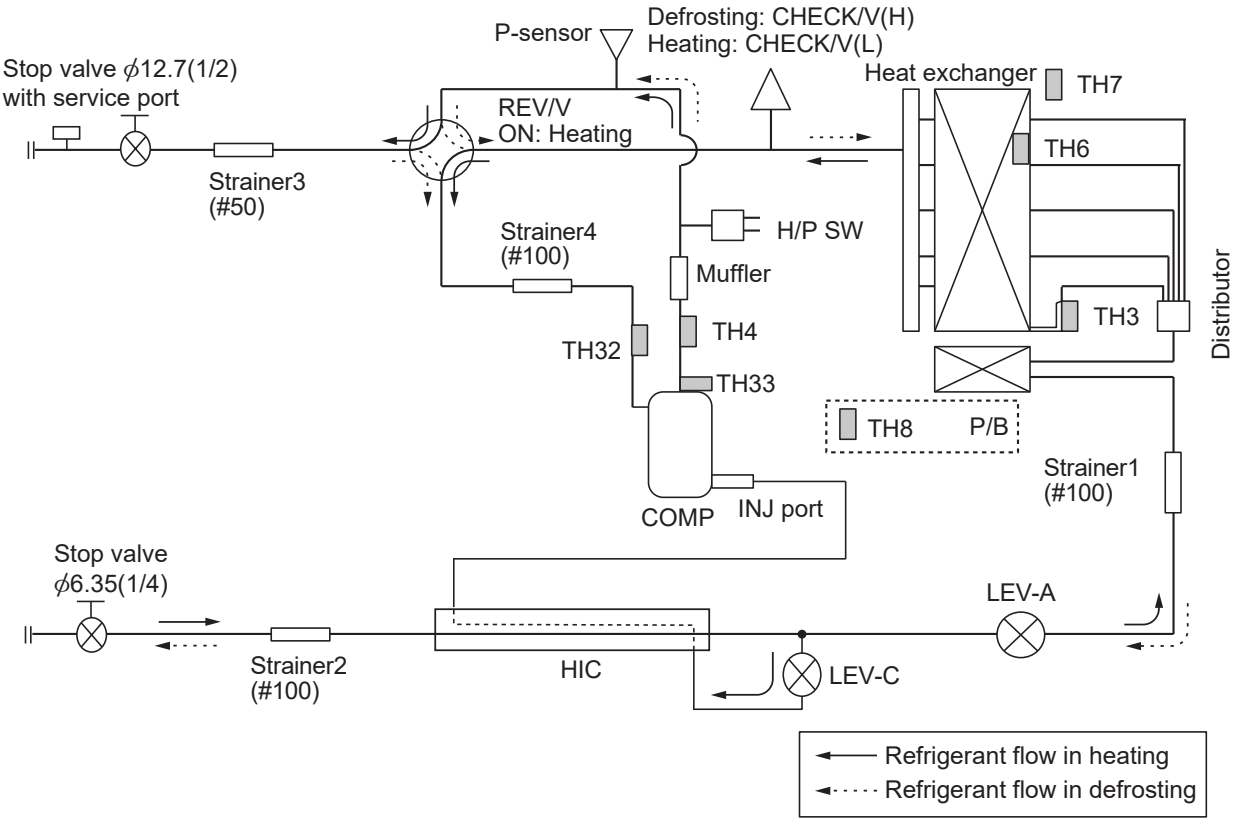

## ■ PXZ-4F75VG

Unit: mm

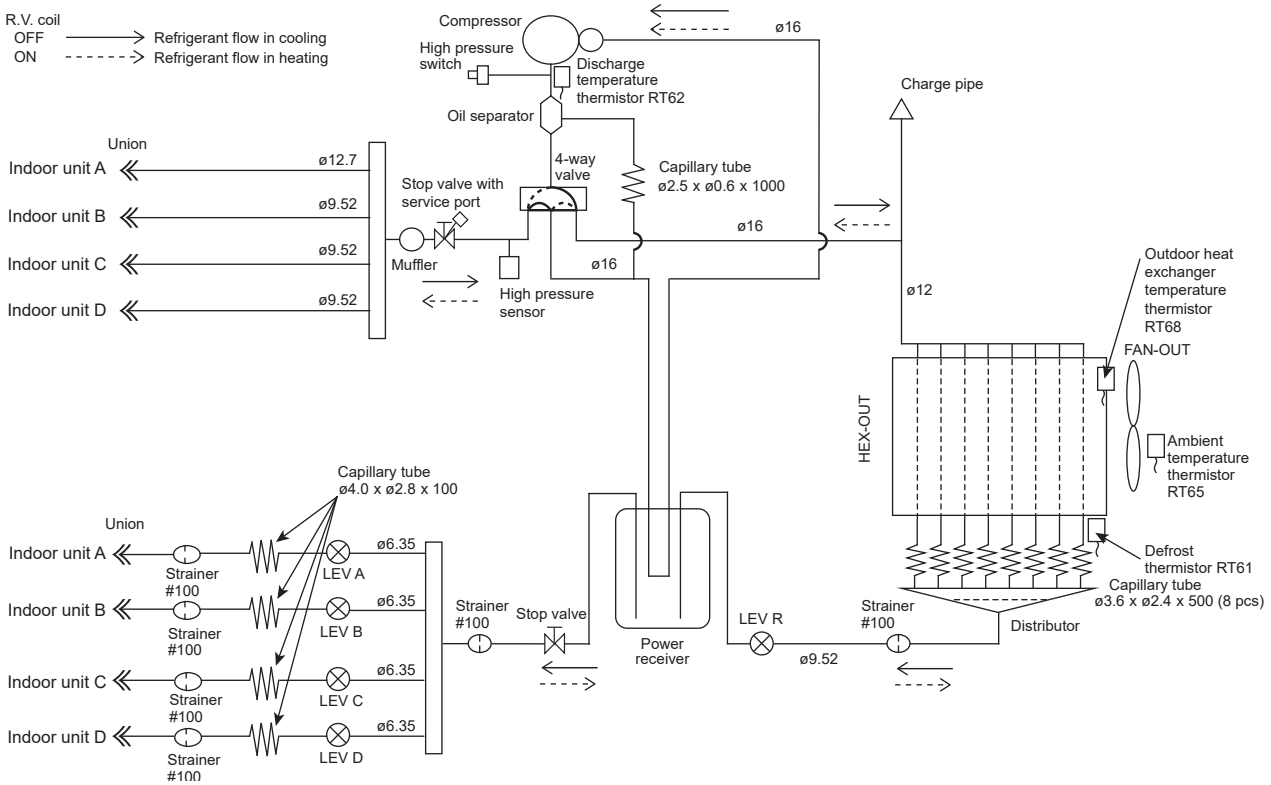


## ■ PXZ-5F85VG

Unit: mm

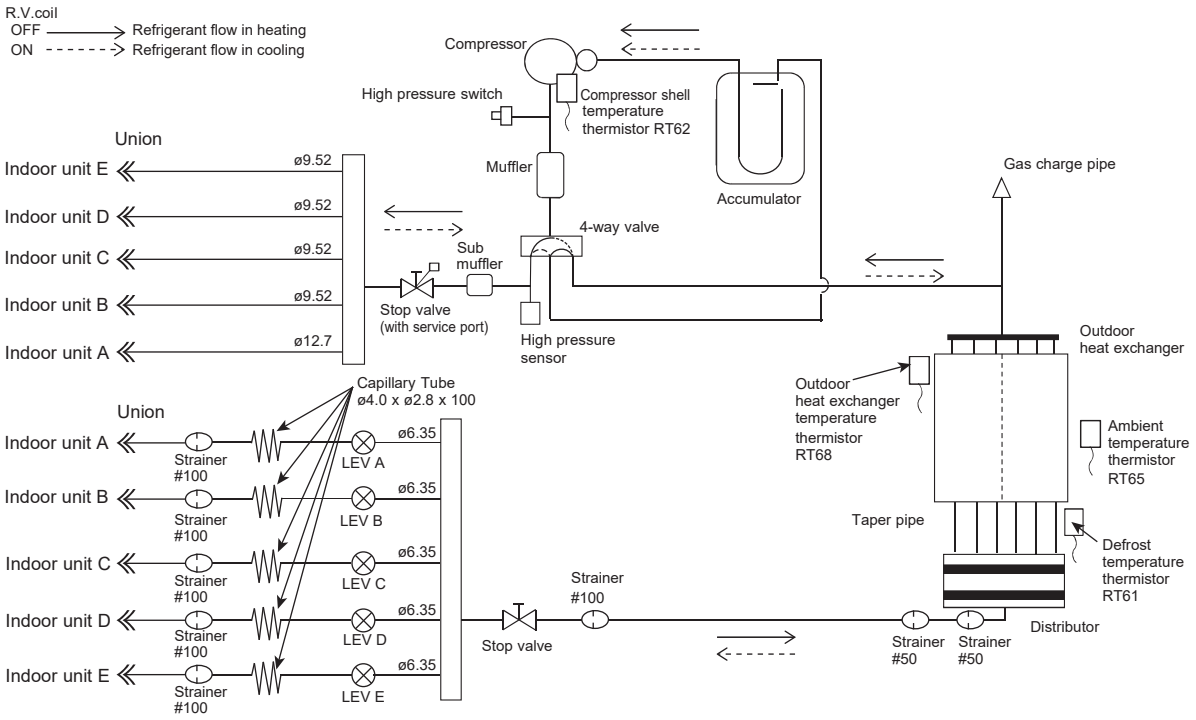

### Definition of terms

Max :Performance at Maximum compressor frequency
Nominal :Performance at Nominal compressor frequency
Mid :Performance at Medium compressor frequency (80% of Nominal)
Min :Performance at Minimum compressor frequency
INJ :This icon means injection circuit is active.

### NOTES:

- The reference data at water outlet temperatures of 35°C,40°C,45°C,50°C,55°C and 60°C are shown.
- Gray highlighted data means integrated data including defrost operation.
- Actual performance may vary depending on operating conditions.
- These data are measured based on EN14511-2013.

Nominal heating capacity
A7W35: Heating outside air DB 7°C/WB 6°C, Water outlet temperature 35°C (ΔT=5°C)
A7W45: Heating outside air DB 7°C/WB 6°C, Water outlet temperature 45°C (ΔT=5°C)
A2W35: Heating outside air DB 2°C/WB 1°C, Water outlet temperature 35°C ( ΔT=5°C)

Nominal Cooling capacity
A35/W7: Cooling outside air DB 35°C, Water outlet temperature 7°C (ΔT=5°C)
A35/W18: Cooling outside air DB 35°C, Water outlet temperature 18°C (ΔT=5°C)

## 5.1 Cooling performance data

## (1)Packaged-type units

### ■ Power inverter

| Water outlet temperature [℃] | | | 7 | | 18 | |
|---|---|---|---|---|---|---|
| Model | Ambient temperature [℃] | | Capacity | COP | Capacity | COP |
| PUZ-WM50VHA(-BS) | Max | 35 | 4.5 | 3.40 | 6.9 | 4.16 |
| | | 30 | 5.3 | 3.60 | 7.1 | 4.46 |
| | | 25 | 4.9 | 3.64 | 6.7 | 4.62 |
| | | 20 | 4.8 | 3.40 | 6.2 | 3.74 |
| | Nominal | 35 | 4.5 | 3.40 | 4.5 | 5.00 |
| | | 30 | 4.5 | 3.62 | 4.5 | 5.40 |
| | | 25 | 4.5 | 4.06 | 4.5 | 6.30 |
| | | 20 | 4.0 | 4.31 | 4.0 | 6.31 |
| | Mid | 35 | 3.6 | 3.69 | 3.6 | 5.40 |
| | | 30 | 3.6 | 3.80 | 3.6 | 5.69 |
| | | 25 | 3.6 | 4.11 | 3.6 | 6.23 |
| | | 20 | 3.6 | 3.89 | 3.6 | 5.88 |
| | Min | 35 | 1.9 | 4.01 | 2.6 | 5.66 |
| | | 30 | 2.0 | 4.69 | 2.7 | 6.38 |
| | | 25 | 2.1 | 5.46 | 2.8 | 7.28 |
| | | 20 | 2.1 | 5.82 | 2.8 | 7.37 |
| PUZ-WM60VAA(-BS) | Max | 35 | 6.0 | 3.30 | 8.4 | 3.51 |
| | | 30 | 6.3 | 3.73 | 8.7 | 3.98 |
| | | 25 | 6.0 | 3.32 | 8.2 | 3.25 |
| | | 20 | 6.0 | 3.02 | 7.6 | 2.75 |
| | Nominal | 35 | 6.0 | 3.30 | 6.0 | 4.45 |
| | | 30 | 6.0 | 3.89 | 6.0 | 6.42 |
| | | 25 | 6.0 | 3.32 | 6.0 | 6.24 |
| | | 20 | 6.0 | 3.02 | 6.0 | 5.93 |
| | Mid | 35 | 4.8 | 3.84 | 4.8 | 4.88 |
| | | 30 | 4.8 | 4.53 | 4.8 | 6.92 |
| | | 25 | 4.8 | 4.33 | 4.8 | 7.20 |
| | | 20 | 4.8 | 4.07 | 4.8 | 7.31 |
| | Min | 35 | 2.3 | 4.58 | 3.2 | 5.46 |
| | | 30 | 2.4 | 5.54 | 3.3 | 6.82 |
| | | 25 | 2.5 | 5.68 | 3.4 | 7.72 |
| | | 20 | 2.6 | 5.54 | 3.4 | 8.41 |

| Water outlet temperature [°C] | | | 7 | | 18 | |
|---|---|---|---|---|---|---|
| Model | Ambient temperature [°C] | | Capacity | COP | Capacity | COP |
| PUZ-WM85VAA(-BS)<br>PUZ-WM85YAA(-BS) | Max | 35 | 7.5 | 3.15 | 10.5 | 3.87 |
| | | 30 | 7.9 | 3.56 | 10.9 | 4.38 |
| | | 25 | 7.5 | 3.17 | 10.2 | 3.58 |
| | | 20 | 7.2 | 2.88 | 9.5 | 3.03 |
| | Nominal | 35 | 7.5 | 3.15 | 7.5 | 4.90 |
| | | 30 | 7.5 | 3.71 | 7.5 | 7.07 |
| | | 25 | 7.5 | 3.17 | 7.5 | 6.87 |
| | | 20 | 7.2 | 2.88 | 7.5 | 6.53 |
| | Mid | 35 | 6.0 | 3.66 | 6.0 | 5.38 |
| | | 30 | 6.0 | 4.33 | 6.0 | 7.62 |
| | | 25 | 6.0 | 4.13 | 6.0 | 7.93 |
| | | 20 | 6.0 | 3.89 | 6.0 | 8.05 |
| | Min | 35 | 2.3 | 4.38 | 3.2 | 6.01 |
| | | 30 | 2.4 | 5.29 | 3.3 | 7.51 |
| | | 25 | 2.5 | 5.43 | 3.4 | 8.50 |
| | | 20 | 2.6 | 5.29 | 3.4 | 9.26 |
| PUZ-WM112VAA(-BS)<br>PUZ-WM112YAA(-BS) | Max | 35 | 10.0 | 3.30 | 13.9 | 3.98 |
| | | 30 | 10.6 | 3.91 | 14.8 | 4.67 |
| | | 25 | 10.4 | 3.72 | 14.1 | 4.18 |
| | | 20 | 10.1 | 3.44 | 13.4 | 3.63 |
| | Nominal | 35 | 10.0 | 3.30 | 10.0 | 4.90 |
| | | 30 | 10.0 | 4.14 | 10.0 | 5.83 |
| | | 25 | 10.0 | 3.92 | 10.0 | 5.81 |
| | | 20 | 10.0 | 3.49 | 10.0 | 5.48 |
| | Mid | 35 | 8.0 | 3.80 | 8.0 | 5.04 |
| | | 30 | 8.0 | 4.57 | 8.0 | 5.94 |
| | | 25 | 8.0 | 4.66 | 8.0 | 6.27 |
| | | 20 | 8.0 | 4.58 | 8.0 | 6.27 |
| | Min | 35 | 2.8 | 3.00 | 4.1 | 4.91 |
| | | 30 | 3.0 | 3.45 | 4.3 | 5.79 |
| | | 25 | 3.1 | 4.09 | 4.3 | 6.81 |
| | | 20 | 3.2 | 4.51 | 4.4 | 7.44 |
| PUZ-HWM140VHA(-BS)<br>PUZ-HWM140YHA(-BS) | Max | 35 | 12.3 | 3.07 | 16.2 | 4.34 |
| | | 30 | 12.3 | 3.63 | 16.2 | 5.14 |
| | | 25 | 12.3 | 3.94 | 16.2 | 5.61 |
| | | 20 | 12.3 | 4.45 | 16.2 | 6.21 |
| | Nominal | 35 | 11.9 | 3.24 | 11.1 | 5.35 |
| | | 30 | 11.9 | 3.84 | 11.1 | 6.33 |
| | | 25 | 11.9 | 4.16 | 11.1 | 6.91 |
| | | 20 | 11.9 | 4.69 | 11.1 | 7.65 |
| | Mid | 35 | 9.5 | 4.07 | 8.9 | 6.20 |
| | | 30 | 9.5 | 4.78 | 8.9 | 7.27 |
| | | 25 | 9.5 | 5.37 | 8.9 | 7.86 |
| | | 20 | 9.5 | 6.12 | 8.9 | 8.80 |
| | Min | 35 | 5.0 | 3.84 | 7.4 | 6.26 |
| | | 30 | 5.3 | 4.37 | 7.7 | 7.21 |
| | | 25 | 5.5 | 5.13 | 7.9 | 7.95 |
| | | 20 | 5.7 | 5.68 | 8.1 | 8.95 |

## (2)Split-type units

### ■ Power inverter

| Water outlet temperature [℃] | | | 7 | | 18 | |
|---|---|---|---|---|---|---|
| Model | Ambient temperature [℃] | | Capacity | COP | Capacity | COP |
| SUZ-SWM40VA | Max | 35 | 5.1 | 3.18 | 7.0 | 4.56 |
| | | 30 | 5.3 | 3.72 | 7.3 | 5.46 |
| | | 25 | 5.5 | 4.38 | 7.6 | 6.61 |
| | | 20 | 5.7 | 4.81 | 7.8 | 7.53 |
| | Nominal | 35 | 4.5 | 3.29 | 5.6 | 4.97 |
| | | 30 | 4.5 | 3.95 | 5.6 | 6.10 |
| | | 25 | 4.5 | 4.67 | 5.6 | 7.44 |
| | | 20 | 4.5 | 5.24 | 5.6 | 8.77 |
| | Mid | 35 | 3.6 | 3.45 | 4.5 | 5.24 |
| | | 30 | 3.6 | 4.13 | 4.5 | 6.31 |
| | | 25 | 3.6 | 4.91 | 4.5 | 7.70 |
| | | 20 | 3.6 | 5.45 | 4.5 | 8.93 |
| | Min | 35 | 1.2 | 3.17 | 1.8 | 5.03 |
| | | 30 | 1.3 | 3.75 | 1.9 | 6.07 |
| | | 25 | 1.4 | 4.50 | 2.0 | 7.42 |
| | | 20 | 1.6 | 5.13 | 2.1 | 8.47 |
| SUZ-SWM60VA | Max | 35 | 5.9 | 2.87 | 8.3 | 4.16 |
| | | 30 | 6.2 | 3.37 | 8.6 | 5.00 |
| | | 25 | 6.4 | 3.96 | 9.0 | 5.96 |
| | | 20 | 6.7 | 4.65 | 9.3 | 6.73 |
| | Nominal | 35 | 5.0 | 3.02 | 6.0 | 4.88 |
| | | 30 | 5.0 | 3.59 | 6.0 | 5.90 |
| | | 25 | 5.0 | 4.30 | 6.0 | 7.28 |
| | | 20 | 5.0 | 5.11 | 6.0 | 8.69 |
| | Mid | 35 | 4.0 | 3.14 | 4.8 | 4.90 |
| | | 30 | 4.0 | 3.76 | 4.8 | 5.94 |
| | | 25 | 4.0 | 4.44 | 4.8 | 7.18 |
| | | 20 | 4.0 | 5.27 | 4.8 | 8.67 |
| | Min | 35 | 1.6 | 2.56 | 2.4 | 4.32 |
| | | 30 | 1.7 | 3.02 | 2.5 | 5.33 |
| | | 25 | 1.9 | 3.54 | 2.6 | 6.55 |
| | | 20 | 2.1 | 4.18 | 2.8 | 7.72 |
| SUZ-SWM80VA | Max | 35 | 6.2 | 2.79 | 8.5 | 4.10 |
| | | 30 | 6.5 | 3.28 | 8.9 | 4.93 |
| | | 25 | 6.7 | 3.86 | 9.3 | 5.88 |
| | | 20 | 7.0 | 4.52 | 9.6 | 6.63 |
| | Nominal | 35 | 5.4 | 3.00 | 6.3 | 4.80 |
| | | 30 | 5.4 | 3.53 | 6.3 | 5.79 |
| | | 25 | 5.4 | 4.22 | 6.3 | 7.07 |
| | | 20 | 5.4 | 5.01 | 6.3 | 8.21 |
| | Mid | 35 | 4.3 | 3.12 | 5.0 | 4.93 |
| | | 30 | 4.3 | 3.71 | 5.0 | 5.98 |
| | | 25 | 4.3 | 4.41 | 5.0 | 7.24 |
| | | 20 | 4.3 | 5.24 | 5.0 | 8.76 |
| | Min | 35 | 1.6 | 2.56 | 2.4 | 4.32 |
| | | 30 | 1.7 | 3.02 | 2.5 | 5.33 |
| | | 25 | 1.9 | 3.54 | 2.6 | 6.55 |
| | | 20 | 2.1 | 4.18 | 2.8 | 7.72 |
| SUZ-SWM30VA<br>SUZ-SHWM30VAH | Max | 35 | 4.1 | 3.23 | 5.5 | 4.42 |
| | | 30 | 4.3 | 3.83 | 5.8 | 5.16 |
| | | 25 | 4.5 | 4.55 | 6.0 | 6.19 |
| | | 20 | 4.6 | 5.31 | 6.3 | 7.62 |
| | Nominal | 35 | 3.5 | 3.52 | 3.5 | 5.51 |
| | | 30 | 3.5 | 4.28 | 3.5 | 6.62 |
| | | 25 | 3.5 | 5.15 | 3.5 | 7.95 |
| | | 20 | 3.5 | 6.18 | 3.5 | 8.99 |
| | Mid | 35 | 2.8 | 3.77 | 2.8 | 5.69 |
| | | 30 | 2.8 | 4.50 | 2.8 | 6.83 |
| | | 25 | 2.8 | 5.39 | 2.8 | 8.24 |
| | | 20 | 2.8 | 6.47 | 2.8 | 9.39 |
| | Min | 35 | 1.3 | 3.70 | 1.5 | 5.73 |
| | | 30 | 1.3 | 4.22 | 1.5 | 6.66 |
| | | 25 | 1.4 | 5.19 | 1.6 | 8.22 |
| | | 20 | 1.4 | 6.02 | 1.7 | 9.60 |

| Water outlet temperature [°C] | | | 7 | | 18 | |
|---|---|---|---|---|---|---|
| Model | Ambient temperature [°C] | | Capacity | COP | Capacity | COP |
| SUZ-SWM40VA2(-SC) | Max | 35 | 4.7 | 3.13 | 6.5 | 4.18 |
| | | 30 | 5.0 | 3.67 | 7.0 | 5.01 |
| | | 25 | 5.2 | 4.33 | 7.2 | 5.96 |
| | | 20 | 5.4 | 5.12 | 7.5 | 7.26 |
| | Nominal | 35 | 4.5 | 3.31 | 5.6 | 4.71 |
| | | 30 | 4.5 | 3.88 | 5.6 | 5.65 |
| | | 25 | 4.5 | 4.67 | 5.6 | 6.72 |
| | | 20 | 4.5 | 5.62 | 5.6 | 7.50 |
| | Mid | 35 | 3.6 | 3.54 | 4.5 | 5.16 |
| | | 30 | 3.6 | 4.19 | 4.5 | 6.18 |
| | | 25 | 3.6 | 5.00 | 4.5 | 7.28 |
| | | 20 | 3.6 | 6.02 | 4.5 | 8.28 |
| | Min | 35 | 1.3 | 3.55 | 1.6 | 5.45 |
| | | 30 | 1.3 | 4.05 | 1.6 | 6.34 |
| | | 25 | 1.4 | 4.98 | 1.7 | 7.82 |
| | | 20 | 1.4 | 5.78 | 1.8 | 9.13 |
| SUZ-SHWM40VAH(-SC) | Max | 35 | 4.9 | 2.98 | 6.5 | 3.97 |
| | | 30 | 5.3 | 3.65 | 6.9 | 4.62 |
| | | 25 | 5.5 | 4.51 | 7.2 | 5.35 |
| | | 20 | 5.6 | 5.83 | 7.5 | 6.17 |
| | Nominal | 35 | 4.5 | 3.33 | 5.6 | 4.70 |
| | | 30 | 4.5 | 3.90 | 5.6 | 5.41 |
| | | 25 | 4.5 | 4.97 | 5.6 | 6.15 |
| | | 20 | 4.5 | 6.37 | 5.6 | 6.88 |
| | Mid | 35 | 3.6 | 3.37 | 4.5 | 4.60 |
| | | 30 | 3.6 | 4.04 | 4.5 | 5.27 |
| | | 25 | 3.6 | 5.00 | 4.5 | 5.79 |
| | | 20 | 3.6 | 6.16 | 4.5 | 6.35 |
| | Min | 35 | 1.7 | 3.14 | 2.1 | 4.28 |
| | | 30 | 1.8 | 3.88 | 2.2 | 4.95 |
| | | 25 | 1.9 | 4.76 | 2.3 | 5.59 |
| | | 20 | 2.0 | 5.84 | 2.3 | 6.11 |
| SUZ-SWM60VA2(-SC) | Max | 35 | 5.3 | 2.82 | 7.2 | 3.75 |
| | | 30 | 5.7 | 3.45 | 7.6 | 4.36 |
| | | 25 | 5.9 | 4.27 | 8.0 | 5.05 |
| | | 20 | 6.1 | 5.52 | 8.3 | 5.83 |
| | Nominal | 35 | 5.0 | 3.18 | 6.0 | 4.65 |
| | | 30 | 5.0 | 3.69 | 6.0 | 5.11 |
| | | 25 | 5.0 | 4.70 | 6.0 | 5.81 |
| | | 20 | 5.0 | 6.03 | 6.0 | 6.50 |
| | Mid | 35 | 4.0 | 3.32 | 4.8 | 4.65 |
| | | 30 | 4.0 | 3.98 | 4.8 | 5.33 |
| | | 25 | 4.0 | 4.93 | 4.8 | 5.85 |
| | | 20 | 4.0 | 6.07 | 4.8 | 6.42 |
| | Min | 35 | 1.7 | 3.11 | 2.1 | 4.23 |
| | | 30 | 1.8 | 3.84 | 2.2 | 4.90 |
| | | 25 | 1.9 | 4.71 | 2.3 | 5.53 |
| | | 20 | 2.0 | 5.77 | 2.3 | 6.05 |
| SUZ-SHWM60VAH(-SC) | Max | 35 | 6.3 | 3.18 | 8.3 | 4.23 |
| | | 30 | 6.6 | 3.73 | 8.5 | 5.00 |
| | | 25 | 6.8 | 4.43 | 8.8 | 6.07 |
| | | 20 | 7.0 | 5.22 | 9.1 | 7.43 |
| | Nominal | 35 | 6.0 | 3.28 | 6.0 | 5.21 |
| | | 30 | 6.0 | 3.91 | 6.0 | 6.45 |
| | | 25 | 6.0 | 4.74 | 6.0 | 7.91 |
| | | 20 | 6.0 | 5.86 | 6.0 | 9.36 |
| | Mid | 35 | 4.8 | 3.52 | 4.8 | 5.39 |
| | | 30 | 4.8 | 4.26 | 4.8 | 6.60 |
| | | 25 | 4.8 | 5.17 | 4.8 | 8.15 |
| | | 20 | 4.8 | 6.39 | 4.8 | 9.75 |
| | Min | 35 | 2.3 | 3.23 | 3.0 | 4.86 |
| | | 30 | 2.4 | 3.87 | 3.2 | 6.04 |
| | | 25 | 2.5 | 4.74 | 3.3 | 7.41 |
| | | 20 | 2.6 | 5.95 | 3.5 | 9.03 |

| Water outlet temperature [℃] | | | 7 | | 18 | |
|---|---|---|---|---|---|---|
| Model | Ambient temperature [℃] | | Capacity | COP | Capacity | COP |
| SUZ-SWM80VA2<br>SUZ-SWM80VAH2 | Max | 35 | 6.9 | 2.98 | 9.1 | 3.89 |
| | | 30 | 7.2 | 3.50 | 9.3 | 4.60 |
| | | 25 | 7.5 | 4.15 | 9.7 | 5.58 |
| | | 20 | 7.7 | 4.89 | 10.0 | 6.83 |
| | Nominal | 35 | 6.7 | 3.20 | 6.7 | 5.06 |
| | | 30 | 6.7 | 3.66 | 6.7 | 5.93 |
| | | 25 | 6.7 | 4.44 | 6.7 | 7.28 |
| | | 20 | 6.7 | 5.49 | 6.7 | 8.61 |
| | Mid | 35 | 5.4 | 3.43 | 5.4 | 5.23 |
| | | 30 | 5.4 | 4.16 | 5.4 | 6.41 |
| | | 25 | 5.4 | 5.04 | 5.4 | 7.91 |
| | | 20 | 5.4 | 6.23 | 5.4 | 9.47 |
| | Min | 35 | 2.3 | 3.15 | 3.0 | 4.72 |
| | | 30 | 2.4 | 3.78 | 3.2 | 5.86 |
| | | 25 | 2.5 | 4.62 | 3.3 | 7.20 |
| | | 20 | 2.6 | 5.80 | 3.5 | 8.77 |
| SUZ-SWM100VA<br>SUZ-SWM100VAH | Max | 35 | 7.5 | 2.78 | 10.1 | 3.46 |
| | | 30 | 7.9 | 3.25 | 10.4 | 4.10 |
| | | 25 | 8.2 | 3.82 | 10.8 | 4.91 |
| | | 20 | 8.5 | 4.53 | 11.1 | 5.93 |
| | Nominal | 35 | 7.3 | 3.00 | 8.1 | 4.44 |
| | | 30 | 7.3 | 3.46 | 8.1 | 5.14 |
| | | 25 | 7.3 | 4.17 | 8.1 | 6.18 |
| | | 20 | 7.3 | 5.22 | 8.1 | 7.28 |
| | Mid | 35 | 5.8 | 3.28 | 6.5 | 4.79 |
| | | 30 | 5.8 | 3.96 | 6.5 | 5.77 |
| | | 25 | 5.8 | 4.87 | 6.5 | 7.09 |
| | | 20 | 5.8 | 6.00 | 6.5 | 8.37 |
| | Min | 35 | 2.3 | 3.10 | 3.0 | 4.41 |
| | | 30 | 2.4 | 3.72 | 3.2 | 5.48 |
| | | 25 | 2.5 | 4.55 | 3.3 | 6.73 |
| | | 20 | 2.6 | 5.71 | 3.5 | 8.19 |

## 5.2 Heating performance data

### (1)Packaged-type units

#### ■ PUZ-WM50VHA(-BS)

| Water outlet temperature [°C] | | 25 | | 35 | | 40 | | 45 | | 50 | | 55 | | 60 | |
|---|---|---|---|---|---|---|---|---|---|---|---|---|---|---|---|
| Ambient temperature [°C] | | Capacity | COP | Capacity | COP | Capacity | COP | Capacity | COP | Capacity | COP | Capacity | COP | Capacity | COP |
| Max | -20 | - | - | 3.5 | 1.75 | 3.0 | 1.88 | - | - | - | - | - | - | - | - |
| | -15 | - | - | 3.9 | 2.60 | 3.9 | 2.43 | 3.9 | 2.26 | - | - | - | - | - | - |
| | -10 | 4.5 | 3.34 | 4.7 | 2.91 | 4.6 | 2.68 | 4.5 | 2.46 | 4.2 | 2.06 | 4.0 | 1.87 | - | - |
| | -7 | 5.0 | 3.64 | 5.5 | 3.13 | 5.3 | 2.87 | 5.1 | 2.61 | 4.7 | 2.29 | 4.4 | 1.97 | - | - |
| | 2 | 5.5 | 4.19 | 5.4 | 3.40 | 5.2 | 3.05 | 5.1 | 2.73 | 5.0 | 2.46 | 5.0 | 1.98 | 4.8 | 1.95 |
| | 7 | 5.9 | 6.45 | 5.6 | 4.82 | 5.5 | 4.46 | 5.4 | 3.93 | 5.2 | 3.37 | 5.0 | 3.08 | 4.9 | 2.61 |
| | 12 | 6.4 | 7.26 | 6.2 | 5.60 | 6.0 | 4.96 | 5.9 | 4.32 | 5.7 | 3.75 | 5.4 | 3.18 | 5.3 | 2.80 |
| | 15 | 7.0 | 8.19 | 6.7 | 6.18 | 6.6 | 5.44 | 6.4 | 4.70 | 6.2 | 4.07 | 5.9 | 3.44 | 5.8 | 3.02 |
| | 20 | 5.3 | 7.74 | 5.1 | 5.84 | 5.0 | 5.09 | 4.9 | 4.45 | 4.8 | 3.90 | 4.6 | 3.43 | 4.5 | 3.03 |
| Nominal | -20 | - | - | 3.5 | 1.75 | 3.0 | 1.88 | - | - | - | - | - | - | - | - |
| | -15 | - | - | 3.9 | 2.60 | 3.9 | 2.43 | 3.9 | 2.26 | - | - | - | - | - | - |
| | -10 | 4.5 | 3.34 | 4.7 | 2.91 | 4.6 | 2.68 | 4.5 | 2.46 | 4.2 | 2.06 | 4.0 | 1.87 | - | - |
| | -7 | 5.0 | 3.64 | 5.0 | 3.00 | 5.0 | 2.81 | 5.0 | 2.61 | 4.7 | 2.29 | 4.4 | 1.97 | - | - |
| | 2 | 5.0 | 4.38 | 5.0 | 3.70 | 5.0 | 3.10 | 5.0 | 2.76 | 5.0 | 2.46 | 5.0 | 1.98 | 4.8 | 1.95 |
| | 7 | 5.0 | 6.69 | 5.0 | 5.00 | 5.0 | 4.48 | 5.0 | 3.87 | 5.0 | 3.39 | 5.0 | 3.08 | 4.9 | 2.61 |
| | 12 | 5.0 | 6.93 | 5.0 | 6.13 | 5.0 | 5.37 | 5.0 | 4.60 | 5.0 | 3.92 | 5.0 | 3.23 | 5.0 | 2.82 |
| | 15 | 5.0 | 7.16 | 5.0 | 6.84 | 5.0 | 5.94 | 5.0 | 5.05 | 5.0 | 4.30 | 5.0 | 3.54 | 5.0 | 3.09 |
| | 20 | 5.0 | 7.89 | 5.0 | 5.87 | 5.0 | 5.09 | 4.9 | 4.45 | 4.8 | 3.90 | 4.6 | 3.43 | 4.5 | 3.03 |
| Mid | -20 | - | - | 2.8 | 1.87 | 2.4 | 1.76 | - | - | - | - | - | - | - | - |
| | -15 | - | - | 2.9 | 2.15 | 2.9 | 1.96 | 2.8 | 1.79 | - | - | - | - | - | - |
| | -10 | 3.6 | 3.46 | 3.5 | 2.77 | 3.4 | 2.49 | 3.4 | 2.24 | 3.3 | 2.00 | 3.2 | 1.78 | - | - |
| | -7 | 4.0 | 3.81 | 4.0 | 3.04 | 3.8 | 2.72 | 3.7 | 2.42 | 3.5 | 2.15 | 3.5 | 1.90 | - | - |
| | 2 | 4.0 | 4.43 | 4.0 | 3.69 | 4.0 | 3.11 | 4.0 | 2.77 | 4.0 | 2.46 | 4.0 | 2.20 | 3.9 | 1.96 |
| | 7 | 4.0 | 6.96 | 4.0 | 5.47 | 4.0 | 4.68 | 4.0 | 4.11 | 4.0 | 3.41 | 4.0 | 2.99 | 4.0 | 2.61 |
| | 12 | 4.0 | 7.39 | 4.0 | 6.17 | 4.0 | 5.40 | 4.0 | 4.63 | 4.0 | 3.99 | 4.0 | 3.35 | 4.0 | 2.92 |
| | 15 | 4.0 | 7.47 | 4.0 | 6.85 | 4.0 | 5.95 | 4.0 | 5.05 | 4.0 | 4.36 | 4.0 | 3.66 | 4.0 | 3.18 |
| | 20 | 4.0 | 8.20 | 4.0 | 6.03 | 4.0 | 5.22 | 4.0 | 4.54 | 4.0 | 3.96 | 4.0 | 3.47 | 4.0 | 3.05 |
| Min | -20 | - | - | 1.9 | 1.88 | 1.9 | 1.75 | - | - | - | - | - | - | - | - |
| | -15 | - | - | 2.4 | 2.24 | 2.4 | 2.03 | 2.3 | 1.84 | - | - | - | - | - | - |
| | -10 | 2.3 | 3.23 | 2.2 | 2.59 | 2.1 | 2.32 | 2.0 | 2.07 | 1.9 | 1.85 | 1.8 | 1.64 | - | - |
| | -7 | 2.7 | 3.25 | 2.7 | 3.25 | 2.3 | 2.54 | 2.5 | 2.36 | 2.2 | 2.05 | 2.0 | 1.76 | - | - |
| | 2 | 2.5 | 4.24 | 2.5 | 3.42 | 2.5 | 3.88 | 2.5 | 3.47 | 2.4 | 3.10 | 2.3 | 2.78 | 2.2 | 2.49 |
| | 7 | 1.9 | 6.55 | 1.8 | 5.46 | 1.5 | 3.57 | 1.3 | 2.97 | 1.3 | 2.60 | 1.3 | 2.29 | 1.3 | 2.00 |
| | 12 | 1.8 | 8.57 | 1.8 | 6.20 | 1.8 | 5.36 | 1.8 | 4.67 | 1.7 | 4.09 | 1.7 | 3.59 | 1.6 | 3.17 |
| | 15 | 2.2 | 7.61 | 2.0 | 6.52 | 1.9 | 5.62 | 1.9 | 4.88 | 1.8 | 4.26 | 1.8 | 3.74 | 1.7 | 3.29 |
| | 20 | 3.1 | 9.79 | 2.9 | 6.84 | 2.8 | 5.81 | 2.7 | 4.96 | 2.6 | 4.26 | 2.5 | 3.68 | 2.4 | 3.19 |

#### ■ PUZ-WM60VAA(-BS)

| Water outlet temperature [°C] | | 25 | | 35 | | 40 | | 45 | | 50 | | 55 | | 60 | |
|---|---|---|---|---|---|---|---|---|---|---|---|---|---|---|---|
| Ambient temperature [°C] | | Capacity | COP | Capacity | COP | Capacity | COP | Capacity | COP | Capacity | COP | Capacity | COP | Capacity | COP |
| Max | -20 | - | - | 3.7 | 2.20 | 3.6 | 1.85 | 3.6 | 1.55 | - | - | - | - | - | - |
| | -15 | - | - | 5.3 | 2.70 | 5.2 | 2.30 | 5.1 | 1.95 | 5.1 | 1.95 | - | - | - | - |
| | -10 | 6.3 | 3.10 | 6.2 | 2.80 | 6.1 | 2.50 | 6.0 | 2.20 | 5.9 | 2.00 | 5.7 | 1.80 | - | - |
| | -7 | 6.9 | 3.25 | 6.6 | 2.95 | 6.3 | 2.65 | 6.0 | 2.40 | 6.0 | 2.20 | 6.0 | 2.05 | - | - |
| | 2 | 7.3 | 3.65 | 7.1 | 3.40 | 6.9 | 3.15 | 6.7 | 2.90 | 6.8 | 2.60 | 6.9 | 2.39 | 7.0 | 2.15 |
| | 7 | 8.4 | 5.30 | 7.9 | 4.80 | 7.4 | 4.30 | 6.9 | 3.85 | 7.0 | 3.30 | 7.1 | 2.80 | 7.1 | 2.50 |
| | 12 | 8.1 | 5.30 | 7.8 | 4.85 | 7.5 | 4.40 | 7.2 | 3.95 | 7.3 | 3.45 | 7.4 | 2.95 | 7.5 | 2.60 |
| | 15 | 9.0 | 5.60 | 8.6 | 5.15 | 8.2 | 4.70 | 7.8 | 4.25 | 7.9 | 3.70 | 8.0 | 3.15 | 8.1 | 2.80 |
| | 20 | 9.7 | 6.25 | 9.4 | 5.65 | 9.1 | 5.05 | 8.8 | 4.50 | 8.9 | 3.95 | 9.1 | 3.45 | 9.2 | 3.10 |
| Nominal | -20 | - | - | 3.7 | 2.20 | 3.6 | 1.85 | - | - | - | - | - | - | - | - |
| | -15 | - | - | 5.3 | 2.70 | 5.2 | 2.30 | 5.1 | 1.95 | - | - | - | - | - | - |
| | -10 | 6.0 | 3.20 | 6.0 | 2.85 | 6.0 | 2.50 | 6.0 | 2.20 | 5.9 | 2.00 | 5.7 | 1.80 | - | - |
| | -7 | 6.0 | 3.60 | 6.0 | 3.20 | 6.0 | 2.80 | 6.0 | 2.40 | 6.0 | 2.20 | 6.0 | 2.05 | - | - |
| | 2 | 6.0 | 4.10 | 6.0 | 3.75 | 6.0 | 3.40 | 6.0 | 3.06 | 6.0 | 2.75 | 6.0 | 2.45 | 5.9 | 2.20 |
| | 7 | 6.0 | 5.67 | 6.0 | 5.06 | 6.0 | 4.45 | 6.0 | 3.90 | 6.0 | 3.40 | 6.0 | 2.98 | 6.0 | 2.50 |
| | 12 | 6.0 | 6.10 | 6.0 | 5.45 | 6.0 | 4.80 | 6.0 | 4.20 | 6.0 | 3.60 | 6.0 | 3.05 | 6.0 | 2.70 |
| | 15 | 6.0 | 7.10 | 6.0 | 6.30 | 6.0 | 5.50 | 6.0 | 4.70 | 6.0 | 4.00 | 6.0 | 3.35 | 6.0 | 2.95 |
| | 20 | 6.0 | 8.95 | 6.0 | 7.85 | 6.0 | 6.75 | 6.0 | 5.70 | 6.0 | 4.85 | 6.0 | 4.00 | 6.0 | 3.45 |
| Mid | -20 | - | - | 2.9 | 2.25 | 2.9 | 1.90 | - | - | - | - | - | - | - | - |
| | -15 | - | - | 4.3 | 2.75 | 4.2 | 2.35 | 4.1 | 1.95 | - | - | - | - | - | - |
| | -10 | 4.8 | 3.15 | 4.8 | 2.85 | 4.8 | 2.55 | 4.8 | 2.25 | 4.7 | 2.00 | 4.6 | 1.75 | - | - |
| | -7 | 4.8 | 3.65 | 4.8 | 3.25 | 4.8 | 2.85 | 4.8 | 2.45 | 4.8 | 2.25 | 4.8 | 2.05 | - | - |
| | 2 | 4.8 | 4.40 | 4.8 | 4.00 | 4.8 | 3.60 | 4.8 | 3.20 | 4.8 | 2.85 | 4.8 | 2.50 | 4.7 | 2.25 |
| | 7 | 4.8 | 5.90 | 4.8 | 5.25 | 4.8 | 4.60 | 4.8 | 4.00 | 4.8 | 3.50 | 4.8 | 3.00 | 4.8 | 2.50 |
| | 12 | 4.8 | 6.60 | 4.8 | 5.85 | 4.8 | 5.10 | 4.8 | 4.40 | 4.8 | 3.75 | 4.8 | 3.15 | 4.8 | 2.75 |
| | 15 | 4.8 | 7.60 | 4.8 | 6.70 | 4.8 | 5.80 | 4.8 | 4.95 | 4.8 | 4.20 | 4.8 | 3.45 | 4.8 | 3.00 |
| | 20 | 4.8 | 9.50 | 4.8 | 8.30 | 4.8 | 7.10 | 4.8 | 5.95 | 4.8 | 5.00 | 4.8 | 4.10 | 4.8 | 3.50 |
| Min | -20 | - | - | 2.9 | 2.30 | 2.8 | 1.90 | - | - | - | - | - | - | - | - |
| | -15 | - | - | 3.3 | 2.35 | 3.2 | 2.00 | 3.2 | 1.65 | - | - | - | - | - | - |
| | -10 | 3.7 | 3.05 | 3.6 | 2.75 | 3.6 | 2.45 | 3.5 | 2.20 | 3.4 | 1.85 | 3.4 | 1.55 | - | - |
| | -7 | 3.3 | 3.60 | 3.2 | 3.15 | 3.2 | 2.70 | 3.2 | 2.25 | 3.0 | 2.00 | 2.8 | 1.80 | - | - |
| | 2 | 3.8 | 4.90 | 3.4 | 4.40 | 3.4 | 3.90 | 3.2 | 3.40 | 3.1 | 2.95 | 2.9 | 2.55 | 2.8 | 2.25 |
| | 7 | 3.5 | 6.20 | 2.9 | 5.45 | 2.8 | 4.70 | 2.7 | 3.95 | 2.5 | 3.35 | 2.4 | 2.80 | 2.4 | 2.40 |
| | 12 | 3.2 | 7.25 | 2.9 | 6.35 | 2.7 | 5.45 | 2.6 | 4.60 | 2.5 | 3.90 | 2.4 | 3.20 | 2.3 | 2.75 |
| | 15 | 3.4 | 8.05 | 3.1 | 7.05 | 3.0 | 6.05 | 2.9 | 5.10 | 2.8 | 4.30 | 2.7 | 3.50 | 2.5 | 2.95 |
| | 20 | 3.9 | 9.95 | 3.6 | 8.80 | 3.4 | 7.40 | 3.3 | 6.05 | 3.2 | 5.05 | 3.0 | 4.05 | 2.9 | 3.40 |

## ■ PUZ-WM85VAA(-BS) PUZ-WM85YAA(-BS)

| Water outlet temperature [°C] | | 25 | | 35 | | 40 | | 45 | | 50 | | 55 | | 60 | |
|---|---|---|---|---|---|---|---|---|---|---|---|---|---|---|---|
| Ambient temperature [°C] | | Capacity | COP | Capacity | COP | Capacity | COP | Capacity | COP | Capacity | COP | Capacity | COP | Capacity | COP |
| Max | -20 | - | - | 5.0 | 1.75 | 5.0 | 1.60 | 4.9 | 1.45 | - | - | - | - | - | - |
| | -15 | - | - | 7.3 | 2.15 | 7.2 | 1.95 | 7.1 | 1.80 | 6.9 | 1.80 | - | - | - | - |
| | -10 | 8.5 | 2.45 | 8.5 | 2.30 | 8.5 | 2.15 | 8.5 | 2.05 | 8.1 | 1.85 | 7.6 | 1.65 | - | - |
| | -7 | 8.5 | 2.55 | 8.8 | 2.45 | 8.7 | 2.35 | 8.5 | 2.25 | 8.3 | 2.05 | 8.0 | 1.90 | - | - |
| | 2 | 9.8 | 3.45 | 9.7 | 3.20 | 9.6 | 2.95 | 9.5 | 2.70 | 9.3 | 2.45 | 9.2 | 2.25 | 9.1 | 2.00 |
| | 7 | 10.9 | 5.00 | 10.5 | 4.55 | 10.1 | 4.10 | 9.8 | 3.65 | 9.6 | 3.15 | 9.4 | 2.65 | 9.2 | 2.35 |
| | 12 | 11.0 | 5.05 | 10.7 | 4.60 | 10.5 | 4.15 | 10.2 | 3.75 | 10.1 | 3.25 | 9.9 | 2.80 | 9.7 | 2.45 |
| | 15 | 11.9 | 5.35 | 11.5 | 4.90 | 11.3 | 4.45 | 11.1 | 4.00 | 10.9 | 3.50 | 10.7 | 3.00 | 10.5 | 2.60 |
| | 20 | 13.3 | 5.90 | 12.9 | 5.35 | 12.7 | 4.80 | 12.4 | 4.25 | 12.3 | 3.75 | 12.1 | 3.25 | 11.9 | 2.90 |
| Nominal | -20 | - | - | 5.0 | 1.75 | 5.0 | 1.60 | - | - | - | - | - | - | - | - |
| | -15 | - | - | 7.3 | 2.15 | 7.2 | 1.95 | 7.1 | 1.80 | - | - | - | - | - | - |
| | -10 | 8.5 | 2.45 | 8.5 | 2.30 | 8.5 | 2.15 | 8.5 | 2.05 | 8.1 | 1.85 | 7.6 | 1.65 | - | - |
| | -7 | 8.5 | 2.80 | 8.5 | 2.60 | 8.5 | 2.40 | 8.5 | 2.25 | 8.3 | 2.05 | 8.0 | 1.90 | - | - |
| | 2 | 8.5 | 3.87 | 8.5 | 3.51 | 8.5 | 3.15 | 8.5 | 2.86 | 8.5 | 2.55 | 8.5 | 2.30 | 8.3 | 2.05 |
| | 7 | 8.5 | 5.40 | 8.5 | 4.80 | 8.5 | 4.20 | 8.5 | 3.70 | 8.5 | 3.25 | 8.5 | 2.82 | 8.5 | 2.35 |
| | 12 | 8.5 | 5.80 | 8.5 | 5.20 | 8.5 | 4.60 | 8.5 | 4.00 | 8.5 | 3.45 | 8.5 | 2.90 | 8.5 | 2.50 |
| | 15 | 8.5 | 6.70 | 8.5 | 5.95 | 8.5 | 5.20 | 8.5 | 4.45 | 8.5 | 3.80 | 8.5 | 3.20 | 8.5 | 2.75 |
| | 20 | 8.5 | 8.50 | 8.5 | 7.45 | 8.5 | 6.40 | 8.5 | 5.40 | 8.5 | 4.55 | 8.5 | 3.75 | 8.5 | 3.25 |
| Mid | -20 | - | - | 4.0 | 1.80 | 4.0 | 1.60 | - | - | - | - | - | - | - | - |
| | -15 | - | - | 5.8 | 2.20 | 5.8 | 2.00 | 5.7 | 1.80 | - | - | - | - | - | - |
| | -10 | 6.8 | 2.40 | 6.8 | 2.30 | 6.8 | 2.20 | 6.8 | 2.10 | 6.4 | 1.85 | 6.1 | 1.60 | - | - |
| | -7 | 6.8 | 2.75 | 6.8 | 2.60 | 6.8 | 2.45 | 6.8 | 2.30 | 6.6 | 2.10 | 6.4 | 1.90 | - | - |
| | 2 | 6.8 | 4.15 | 6.8 | 3.75 | 6.8 | 3.35 | 6.8 | 3.00 | 6.8 | 2.65 | 6.8 | 2.35 | 6.6 | 2.10 |
| | 7 | 6.8 | 5.60 | 6.8 | 5.00 | 6.8 | 4.40 | 6.8 | 3.80 | 6.8 | 3.30 | 6.8 | 2.85 | 6.8 | 2.35 |
| | 12 | 6.8 | 6.30 | 6.8 | 5.60 | 6.8 | 4.90 | 6.8 | 4.20 | 6.8 | 3.60 | 6.8 | 3.00 | 6.8 | 2.55 |
| | 15 | 6.8 | 7.20 | 6.8 | 6.35 | 6.8 | 5.50 | 6.8 | 4.65 | 6.8 | 3.95 | 6.8 | 3.30 | 6.8 | 2.80 |
| | 20 | 6.8 | 9.05 | 6.8 | 7.90 | 6.8 | 6.75 | 6.8 | 5.60 | 6.8 | 4.70 | 6.8 | 3.85 | 6.8 | 3.30 |
| Min | -20 | - | - | 2.9 | 1.80 | 2.8 | 1.60 | - | - | - | - | - | - | - | - |
| | -15 | - | - | 3.3 | 1.85 | 3.2 | 1.65 | 3.2 | 1.50 | - | - | - | - | - | - |
| | -10 | 3.7 | 2.30 | 3.6 | 2.20 | 3.6 | 2.10 | 3.5 | 2.05 | 3.4 | 1.75 | 3.4 | 1.45 | - | - |
| | -7 | 3.3 | 2.70 | 3.2 | 2.50 | 3.2 | 2.30 | 3.2 | 2.10 | 3.0 | 1.85 | 2.8 | 1.65 | - | - |
| | 2 | 3.8 | 4.65 | 3.4 | 4.15 | 3.4 | 3.65 | 3.2 | 3.15 | 3.1 | 2.75 | 2.9 | 2.40 | 2.8 | 2.10 |
| | 7 | 3.9 | 5.95 | 3.2 | 5.20 | 3.1 | 4.45 | 3.0 | 3.75 | 2.8 | 3.20 | 2.6 | 2.65 | 2.6 | 2.25 |
| | 12 | 3.2 | 6.90 | 2.9 | 6.05 | 2.7 | 5.20 | 2.6 | 4.40 | 2.5 | 3.70 | 2.4 | 3.05 | 2.3 | 2.55 |
| | 15 | 3.4 | 7.65 | 3.1 | 6.70 | 3.0 | 5.75 | 2.9 | 4.80 | 2.8 | 4.05 | 2.7 | 3.35 | 2.5 | 2.75 |
| | 20 | 3.9 | 9.70 | 3.6 | 8.35 | 3.4 | 7.00 | 3.3 | 5.70 | 3.2 | 4.75 | 3.0 | 3.80 | 2.9 | 3.20 |

## ■ PUZ-WM112VAA(-BS) PUZ-WM112YAA(-BS)

| Water outlet temperature [°C] | | 25 | | 35 | | 40 | | 45 | | 50 | | 55 | | 60 | |
|---|---|---|---|---|---|---|---|---|---|---|---|---|---|---|---|
| Ambient temperature [°C] | | Capacity | COP | Capacity | COP | Capacity | COP | Capacity | COP | Capacity | COP | Capacity | COP | Capacity | COP |
| Max | -25 | - | - | 6.5 | 1.70 | 6.2 | 1.55 | 5.9 | 1.40 | - | - | - | - | - | - |
| | -20 | - | - | 7.7 | 2.35 | 7.4 | 2.10 | 7.0 | 1.90 | - | - | - | - | - | - |
| | -15 | - | - | 8.4 | 2.55 | 8.0 | 2.30 | 7.5 | 2.05 | 7.1 | 1.75 | 6.7 | 1.50 | - | - |
| | -10 | 10.1 | 2.80 | 11.2 | 2.60 | 10.6 | 2.40 | 10.1 | 2.25 | 9.5 | 1.90 | 9.0 | 1.55 | - | - |
| | -7 | 11.2 | 2.95 | 12.1 | 2.80 | 11.7 | 2.65 | 11.2 | 2.50 | 10.6 | 2.20 | 10.0 | 1.90 | - | - |
| | 2 | 13.1 | 3.54 | 12.5 | 3.17 | 12.2 | 2.80 | 11.9 | 2.49 | 11.6 | 2.20 | 11.3 | 1.93 | 11.0 | 1.69 |
| | 7 | 14.3 | 5.05 | 13.5 | 4.55 | 13.1 | 4.05 | 12.7 | 3.55 | 12.2 | 3.10 | 11.7 | 2.70 | 11.2 | 2.40 |
| | 12 | 14.4 | 5.65 | 13.7 | 5.25 | 13.3 | 4.85 | 13.0 | 4.50 | 12.6 | 3.95 | 12.1 | 3.45 | 11.6 | 2.96 |
| | 15 | 15.5 | 5.65 | 14.8 | 5.35 | 14.5 | 5.05 | 14.1 | 4.80 | 13.6 | 4.25 | 13.2 | 3.75 | 12.8 | 3.22 |
| | 20 | 17.3 | 7.80 | 16.9 | 6.95 | 16.5 | 6.10 | 16.1 | 5.30 | 15.6 | 4.65 | 15.1 | 4.05 | 14.6 | 3.55 |
| Nominal | -25 | - | - | 6.5 | 1.70 | 6.2 | 1.55 | 5.9 | 1.40 | - | - | - | - | - | - |
| | -20 | - | - | 7.7 | 2.35 | 7.4 | 2.10 | 7.0 | 1.90 | - | - | - | - | - | - |
| | -15 | - | - | 8.4 | 2.55 | 8.0 | 2.30 | 7.5 | 2.05 | 7.1 | 1.75 | 6.7 | 1.50 | - | - |
| | -10 | 10.1 | 3.00 | 10.1 | 2.75 | 10.1 | 2.50 | 10.1 | 2.25 | 9.5 | 1.90 | 9.0 | 1.55 | - | - |
| | -7 | 11.2 | 3.25 | 11.2 | 3.00 | 11.2 | 2.75 | 11.2 | 2.50 | 10.6 | 2.20 | 10.0 | 1.90 | - | - |
| | 2 | 11.2 | 3.83 | 11.2 | 3.44 | 11.2 | 3.05 | 11.2 | 2.74 | 10.6 | 2.30 | 10.0 | 1.95 | 9.4 | 1.70 |
| | 7 | 11.2 | 5.20 | 11.2 | 4.70 | 11.2 | 4.20 | 11.2 | 3.70 | 10.6 | 3.35 | 10.0 | 3.00 | 9.4 | 2.40 |
| | 12 | 11.2 | 6.65 | 11.2 | 6.05 | 11.2 | 5.45 | 11.2 | 4.85 | 10.6 | 4.20 | 10.0 | 3.55 | 9.4 | 3.00 |
| | 15 | 11.2 | 7.55 | 11.2 | 6.85 | 11.2 | 6.15 | 11.2 | 5.50 | 10.6 | 4.75 | 10.0 | 4.00 | 9.4 | 3.35 |
| | 20 | 11.2 | 9.70 | 11.2 | 8.65 | 11.2 | 7.60 | 11.2 | 6.60 | 10.6 | 5.65 | 10.0 | 4.75 | 9.4 | 3.95 |
| Mid | -25 | - | - | 5.2 | 1.75 | 5.0 | 1.60 | 4.7 | 1.45 | - | - | - | - | - | - |
| | -20 | - | - | 6.2 | 2.25 | 5.9 | 2.05 | 5.6 | 1.85 | - | - | - | - | - | - |
| | -15 | - | - | 6.7 | 2.50 | 6.4 | 2.25 | 6.0 | 2.00 | 5.7 | 1.75 | 5.4 | 1.50 | - | - |
| | -10 | 8.1 | 3.05 | 8.1 | 2.80 | 8.1 | 2.55 | 8.1 | 2.30 | 7.6 | 2.00 | 7.2 | 1.70 | - | - |
| | -7 | 9.0 | 3.30 | 9.0 | 3.05 | 9.0 | 2.80 | 9.0 | 2.55 | 8.5 | 2.20 | 8.0 | 1.90 | - | - |
| | 2 | 9.0 | 4.25 | 9.0 | 3.75 | 9.0 | 3.25 | 9.0 | 2.80 | 8.5 | 2.45 | 8.0 | 2.10 | 7.5 | 1.80 |
| | 7 | 9.0 | 5.25 | 9.0 | 4.80 | 9.0 | 4.35 | 9.0 | 3.90 | 8.5 | 3.45 | 8.0 | 3.00 | 7.5 | 2.40 |
| | 12 | 9.0 | 6.85 | 9.0 | 6.25 | 9.0 | 5.65 | 9.0 | 5.05 | 8.5 | 4.35 | 8.0 | 3.65 | 7.5 | 3.10 |
| | 15 | 9.0 | 7.80 | 9.0 | 7.05 | 9.0 | 6.30 | 9.0 | 5.60 | 8.5 | 4.80 | 8.0 | 4.05 | 7.5 | 3.40 |
| | 20 | 9.0 | 9.85 | 9.0 | 8.75 | 9.0 | 7.65 | 9.0 | 6.60 | 8.5 | 5.65 | 8.0 | 4.75 | 7.5 | 4.00 |
| Min | -25 | - | - | 4.1 | 1.70 | 3.9 | 1.50 | 3.7 | 1.35 | - | - | - | - | - | - |
| | -20 | - | - | 4.9 | 2.25 | 4.6 | 2.00 | 4.4 | 1.75 | - | - | - | - | - | - |
| | -15 | - | - | 6.7 | 2.50 | 5.2 | 2.20 | 4.9 | 1.95 | 4.0 | 1.65 | 3.1 | 1.40 | - | - |
| | -10 | 6.9 | 3.00 | 6.2 | 2.75 | 5.9 | 2.50 | 5.7 | 2.25 | 5.4 | 1.95 | 5.1 | 1.70 | - | - |
| | -7 | 4.3 | 3.15 | 3.9 | 2.85 | 3.7 | 2.55 | 3.4 | 2.30 | 3.2 | 2.00 | 3.0 | 1.70 | - | - |
| | 2 | 4.6 | 4.25 | 4.2 | 3.75 | 4.0 | 3.25 | 3.7 | 2.75 | 3.5 | 2.40 | 3.2 | 2.10 | 3.0 | 1.70 |
| | 7 | 4.4 | 4.95 | 4.0 | 4.45 | 3.7 | 3.95 | 3.5 | 3.50 | 3.4 | 3.05 | 3.0 | 2.60 | 2.8 | 2.05 |
| | 12 | 4.3 | 6.30 | 4.0 | 5.85 | 3.8 | 5.40 | 3.7 | 4.95 | 3.5 | 4.30 | 3.3 | 3.65 | 3.1 | 3.05 |
| | 15 | 4.8 | 7.30 | 4.4 | 6.55 | 4.2 | 5.80 | 4.0 | 5.05 | 3.7 | 4.40 | 3.5 | 3.75 | 3.3 | 3.15 |
| | 20 | 5.7 | 9.25 | 5.1 | 8.10 | 4.8 | 6.95 | 4.6 | 5.80 | 4.3 | 5.00 | 4.1 | 4.25 | 3.9 | 3.70 |

## ■ PUZ-HWM140VHA(-BS) PUZ-HWM140YHA(-BS)

| Water outlet temperature [°C] | | 25 | | 35 | | 40 | | 45 | | 50 | | 55 | | 60 | |
|---|---|---|---|---|---|---|---|---|---|---|---|---|---|---|---|
| Ambient temperature [°C] | | Capacity | COP | Capacity | COP | Capacity | COP | Capacity | COP | Capacity | COP | Capacity | COP | Capacity | COP |
| Max | -28 | - | - | 9.1 | 1.60 | 8.8 | 1.45 | 8.5 | 1.30 | - | - | - | - | - | - |
| | -25 | - | - | 10.0 | 1.65 | 9.7 | 1.50 | 9.3 | 1.35 | - | - | - | - | - | - |
| | -20 | - | - | 12.0 | 1.75 | 11.6 | 1.60 | 11.2 | 1.45 | - | - | - | - | - | - |
| | -15 | - | - | 14.0 | 1.85 | 13.5 | 1.70 | 13.1 | 1.55 | 12.6 | 1.45 | 12.2 | 1.30 | - | - |
| | -10 | 14.6 | 2.40 | 14.4 | 2.25 | 14.2 | 2.10 | 14.0 | 1.90 | 14.0 | 1.85 | 14.0 | 1.75 | - | - |
| | -7 | 16.1 | 2.70 | 15.9 | 2.50 | 15.7 | 2.30 | 15.5 | 2.10 | 14.7 | 2.05 | 14.0 | 1.95 | - | - |
| | 2 | 16.5 | 3.25 | 16.3 | 3.00 | 16.0 | 2.75 | 15.8 | 2.50 | 15.1 | 2.45 | 14.3 | 2.35 | 14.0 | 2.10 |
| | 7 | 16.8 | 4.70 | 16.6 | 4.25 | 16.4 | 3.80 | 16.1 | 3.30 | 15.4 | 2.90 | 14.6 | 2.50 | 14.0 | 2.50 |
| | 12 | 17.1 | 5.25 | 16.8 | 4.90 | 16.6 | 4.55 | 16.4 | 4.20 | 15.6 | 3.70 | 14.8 | 3.20 | 14.1 | 2.70 |
| | 15 | 18.5 | 5.35 | 18.2 | 5.00 | 17.9 | 4.75 | 17.7 | 4.50 | 16.9 | 4.00 | 16.0 | 3.50 | 15.2 | 3.00 |
| | 20 | 21.1 | 7.25 | 20.8 | 6.50 | 20.5 | 5.75 | 20.2 | 4.95 | 19.3 | 4.40 | 18.3 | 3.80 | 17.3 | 3.25 |
| Nominal | -28 | - | - | 9.1 | 1.60 | 8.8 | 1.45 | 8.5 | 1.30 | - | - | - | - | - | - |
| | -25 | - | - | 10.0 | 1.65 | 9.7 | 1.50 | 9.3 | 1.35 | - | - | - | - | - | - |
| | -20 | - | - | 10.5 | 2.00 | 10.2 | 1.85 | 9.8 | 1.65 | - | - | - | - | - | - |
| | -15 | - | - | 11.0 | 2.30 | 11.0 | 2.10 | 11.0 | 1.90 | 11.0 | 1.75 | 11.0 | 1.60 | - | - |
| | -10 | 14.0 | 2.80 | 14.0 | 2.50 | 14.0 | 2.20 | 14.0 | 1.90 | 14.0 | 1.85 | 14.0 | 1.75 | - | - |
| | -7 | 14.0 | 3.05 | 14.0 | 2.80 | 14.0 | 2.55 | 14.0 | 2.30 | 14.0 | 2.15 | 14.0 | 1.95 | - | - |
| | 2 | 14.0 | 3.40 | 14.0 | 3.15 | 14.0 | 2.90 | 14.0 | 2.65 | 14.0 | 2.55 | 14.0 | 2.40 | 14.0 | 2.10 |
| | 7 | 14.0 | 4.90 | 14.0 | 4.45 | 14.0 | 4.00 | 14.0 | 3.50 | 14.0 | 3.15 | 14.0 | 2.75 | 14.0 | 2.50 |
| | 12 | 14.0 | 5.50 | 14.0 | 5.15 | 14.0 | 4.80 | 14.0 | 4.45 | 14.0 | 4.00 | 14.0 | 3.50 | 14.0 | 3.00 |
| | 15 | 14.0 | 5.50 | 14.0 | 5.25 | 14.0 | 5.00 | 14.0 | 4.75 | 14.0 | 4.30 | 14.0 | 3.85 | 14.0 | 3.40 |
| | 20 | 14.0 | 7.65 | 14.0 | 6.85 | 14.0 | 6.05 | 14.0 | 5.25 | 14.0 | 4.75 | 14.0 | 4.20 | 14.0 | 3.70 |
| Mid | -28 | - | - | 7.3 | 1.70 | 7.0 | 1.60 | 6.8 | 1.45 | - | - | - | - | - | - |
| | -25 | - | - | 8.0 | 1.75 | 7.7 | 1.65 | 7.5 | 1.50 | - | - | - | - | - | - |
| | -20 | - | - | 8.4 | 2.15 | 8.1 | 2.00 | 7.8 | 1.85 | - | - | - | - | - | - |
| | -15 | - | - | 8.8 | 2.50 | 8.8 | 2.30 | 8.8 | 2.10 | 8.8 | 1.90 | 8.8 | 1.70 | - | - |
| | -10 | 11.2 | 2.85 | 11.2 | 2.70 | 11.2 | 2.55 | 11.2 | 2.35 | 11.2 | 2.10 | 11.2 | 1.85 | - | - |
| | -7 | 11.2 | 3.25 | 11.2 | 3.00 | 11.2 | 2.75 | 11.2 | 2.50 | 11.2 | 2.30 | 11.2 | 2.10 | - | - |
| | 2 | 11.2 | 3.65 | 11.2 | 3.40 | 11.2 | 3.15 | 11.2 | 2.90 | 11.2 | 2.75 | 11.2 | 2.55 | 11.2 | 2.30 |
| | 7 | 11.2 | 5.25 | 11.2 | 4.80 | 11.2 | 4.35 | 11.2 | 3.85 | 11.2 | 3.40 | 11.2 | 2.90 | 11.2 | 2.50 |
| | 12 | 11.2 | 5.85 | 11.2 | 5.55 | 11.2 | 5.25 | 11.2 | 4.90 | 11.2 | 4.30 | 11.2 | 3.70 | 11.2 | 3.00 |
| | 15 | 11.2 | 6.00 | 11.2 | 5.65 | 11.2 | 5.45 | 11.2 | 5.25 | 11.2 | 4.65 | 11.2 | 4.05 | 11.2 | 3.40 |
| | 20 | 11.2 | 8.10 | 11.2 | 7.35 | 11.2 | 6.60 | 11.2 | 5.80 | 11.2 | 5.10 | 11.2 | 4.40 | 11.2 | 3.70 |
| Min | -28 | - | - | 4.8 | 1.70 | 4.4 | 1.45 | 4.0 | 1.15 | - | - | - | - | - | - |
| | -25 | - | - | 5.5 | 1.75 | 5.0 | 1.50 | 4.6 | 1.20 | - | - | - | - | - | - |
| | -20 | - | - | 6.7 | 2.05 | 6.1 | 1.75 | 5.5 | 1.40 | - | - | - | - | - | - |
| | -15 | - | - | 7.8 | 2.35 | 7.2 | 2.00 | 6.5 | 1.60 | 5.7 | 1.30 | 4.8 | 1.00 | - | - |
| | -10 | 6.2 | 2.55 | 5.9 | 2.30 | 5.6 | 2.05 | 5.3 | 1.75 | 4.6 | 1.45 | 4.0 | 1.10 | - | - |
| | -7 | 5.1 | 3.65 | 4.0 | 2.25 | 4.0 | 2.05 | 4.0 | 1.85 | 3.6 | 1.50 | 3.1 | 1.15 | - | - |
| | 2 | 5.6 | 4.20 | 5.1 | 3.65 | 4.7 | 3.10 | 4.2 | 2.50 | 3.7 | 2.05 | 3.2 | 1.55 | - | - |
| | 7 | 4.5 | 6.60 | 4.2 | 4.45 | 3.7 | 3.50 | 3.2 | 2.55 | 2.7 | 2.00 | 2.2 | 1.45 | - | - |
| | 12 | 6.6 | 5.15 | 6.2 | 4.90 | 5.8 | 4.65 | 5.4 | 4.35 | 5.2 | 3.70 | 5.0 | 3.05 | - | - |
| | 15 | 6.9 | 5.15 | 6.4 | 5.10 | 5.9 | 5.05 | 5.4 | 4.95 | 5.3 | 4.35 | 5.2 | 3.70 | - | - |
| | 20 | 7.3 | 14.00 | 6.7 | 8.00 | 6.4 | 6.65 | 6.0 | 5.30 | 5.6 | 4.40 | 5.1 | 3.45 | - | - |

## (2)Split-type units

### ■ SUZ-SWM40VA

| Water outlet temperature [°C] | | 25 | | 35 | | 40 | | 45 | | 50 | | 55 | | 60 | |
|---|---|---|---|---|---|---|---|---|---|---|---|---|---|---|---|
| Ambient temperature [°C] | | Capacity | COP | Capacity | COP | Capacity | COP | Capacity | COP | Capacity | COP | Capacity | COP | Capacity | COP |
| Max | -20 | - | - | 3.2 | 2.18 | 3.0 | 1.93 | - | - | - | - | - | - | - | - |
| | -15 | - | - | 4.3 | 2.45 | 4.1 | 2.17 | 3.9 | 1.89 | - | - | - | - | - | - |
| | -10 | 5.8 | 3.04 | 5.4 | 2.73 | 5.1 | 2.41 | 4.7 | 2.10 | 4.3 | 1.75 | 3.8 | 1.41 | - | - |
| | -7 | 6.5 | 3.22 | 6.1 | 2.89 | 5.7 | 2.56 | 5.2 | 2.23 | 4.6 | 1.84 | 4.0 | 1.45 | - | - |
| | 2 | 6.0 | 3.45 | 5.9 | 3.14 | 5.8 | 2.83 | 5.7 | 2.52 | 5.6 | 2.20 | 5.5 | 1.89 | 5.4 | 1.58 |
| | 7 | 7.3 | 4.89 | 7.1 | 4.38 | 7.0 | 3.87 | 6.8 | 3.36 | 6.4 | 2.83 | 5.9 | 2.30 | 5.5 | 1.77 |
| | 12 | 8.7 | 5.94 | 8.5 | 5.25 | 8.3 | 4.56 | 8.2 | 3.87 | 7.7 | 3.30 | 7.2 | 2.72 | 6.7 | 2.15 |
| | 15 | 7.7 | 6.56 | 7.5 | 5.77 | 7.3 | 4.99 | 7.1 | 4.20 | 6.7 | 3.56 | 6.3 | 2.92 | 5.9 | 2.28 |
| | 20 | 8.4 | 7.37 | 8.2 | 6.45 | 8.0 | 5.54 | 7.8 | 4.62 | 7.4 | 3.91 | 6.9 | 3.20 | 6.5 | 2.49 |
| Nominal | -20 | - | - | 3.2 | 2.18 | 3.0 | 1.93 | - | - | - | - | - | - | - | - |
| | -15 | - | - | 4.3 | 2.45 | 4.1 | 2.17 | 3.9 | 1.89 | - | - | - | - | - | - |
| | -10 | 4.9 | 2.93 | 5.0 | 2.67 | 5.1 | 2.41 | 4.7 | 2.10 | 4.3 | 1.75 | 3.8 | 1.41 | - | - |
| | -7 | 5.0 | 3.58 | 5.0 | 3.13 | 5.0 | 2.68 | 5.2 | 2.23 | 4.6 | 1.84 | 4.0 | 1.45 | - | - |
| | 2 | 4.0 | 4.41 | 4.0 | 3.90 | 4.0 | 3.39 | 4.0 | 2.88 | 4.0 | 2.52 | 4.0 | 2.16 | 4.0 | 1.80 |
| | 7 | 4.0 | 5.95 | 4.0 | 5.20 | 4.0 | 4.45 | 4.0 | 3.70 | 4.0 | 3.16 | 4.0 | 2.61 | 4.0 | 2.07 |
| | 12 | 4.0 | 7.10 | 4.0 | 6.19 | 4.0 | 5.29 | 4.0 | 4.38 | 4.0 | 3.68 | 4.0 | 2.97 | 4.0 | 2.27 |
| | 15 | 4.0 | 7.38 | 4.0 | 6.43 | 4.0 | 5.48 | 4.0 | 4.53 | 4.0 | 3.80 | 4.0 | 3.06 | 4.0 | 2.33 |
| | 20 | 4.0 | 8.37 | 4.0 | 7.25 | 4.0 | 6.14 | 4.0 | 5.02 | 4.0 | 4.20 | 4.0 | 3.37 | 4.0 | 2.55 |
| Mid | -20 | - | - | 2.5 | 2.37 | 2.4 | 2.11 | - | - | - | - | - | - | - | - |
| | -15 | - | - | 3.4 | 2.53 | 3.3 | 2.24 | 3.1 | 1.95 | - | - | - | - | - | - |
| | -10 | 3.9 | 3.13 | 4.0 | 2.80 | 4.1 | 2.48 | 3.8 | 2.15 | 3.4 | 1.75 | 3.0 | 1.35 | - | - |
| | -7 | 4.0 | 3.52 | 4.0 | 3.14 | 4.0 | 2.76 | 4.2 | 2.38 | 3.7 | 1.96 | 3.2 | 1.53 | - | - |
| | 2 | 3.2 | 4.69 | 3.2 | 4.17 | 3.2 | 3.66 | 3.2 | 3.14 | 3.2 | 2.67 | 3.2 | 2.19 | 3.2 | 1.72 |
| | 7 | 3.2 | 5.91 | 3.2 | 5.17 | 3.2 | 4.43 | 3.2 | 3.68 | 3.2 | 3.12 | 3.2 | 2.55 | 3.2 | 1.98 |
| | 12 | 3.2 | 7.11 | 3.2 | 6.20 | 3.2 | 5.29 | 3.2 | 4.38 | 3.2 | 3.68 | 3.2 | 2.98 | 3.2 | 2.28 |
| | 15 | 3.2 | 7.37 | 3.2 | 6.42 | 3.2 | 5.47 | 3.2 | 4.52 | 3.2 | 3.80 | 3.2 | 3.07 | 3.2 | 2.35 |
| | 20 | 3.2 | 8.23 | 3.2 | 7.14 | 3.2 | 6.06 | 3.2 | 4.97 | 3.2 | 4.17 | 3.2 | 3.37 | 3.2 | 2.57 |
| Min | -20 | - | - | 2.5 | 2.38 | 2.4 | 2.11 | - | - | - | - | - | - | - | - |
| | -15 | - | - | 2.2 | 2.60 | 2.1 | 2.30 | 2.0 | 2.00 | - | - | - | - | - | - |
| | -10 | 2.8 | 3.26 | 2.6 | 2.92 | 2.5 | 2.58 | 2.4 | 2.24 | 2.1 | 1.84 | 1.9 | 1.44 | - | - |
| | -7 | 2.4 | 3.55 | 2.3 | 3.17 | 2.2 | 2.80 | 2.1 | 2.42 | 1.9 | 2.02 | 1.7 | 1.61 | - | - |
| | 2 | 2.3 | 4.58 | 2.2 | 4.07 | 2.1 | 3.56 | 2.0 | 3.05 | 1.9 | 2.59 | 1.7 | 2.12 | 1.6 | 1.66 |
| | 7 | 2.2 | 5.74 | 2.1 | 5.03 | 2.0 | 4.32 | 2.0 | 3.61 | 1.8 | 3.03 | 1.7 | 2.44 | 1.5 | 1.86 |
| | 12 | 2.5 | 6.94 | 2.4 | 6.04 | 2.4 | 5.14 | 2.3 | 4.24 | 2.2 | 3.54 | 2.0 | 2.84 | 1.9 | 2.14 |
| | 15 | 2.1 | 6.92 | 2.0 | 6.02 | 2.0 | 5.12 | 1.9 | 4.22 | 1.8 | 3.51 | 1.6 | 2.80 | 1.5 | 2.09 |
| | 20 | 2.3 | 7.87 | 2.2 | 6.80 | 2.2 | 5.73 | 2.1 | 4.66 | 2.0 | 3.87 | 1.8 | 3.07 | 1.7 | 2.28 |

### ■ SUZ-SWM60VA

| Water outlet temperature[°C] | | 25 | | 35 | | 40 | | 45 | | 50 | | 55 | | 60 | |
|---|---|---|---|---|---|---|---|---|---|---|---|---|---|---|---|
| Ambient temperature[°C] | | Capacity | COP | Capacity | COP | Capacity | COP | Capacity | COP | Capacity | COP | Capacity | COP | Capacity | COP |
| Max | -20 | - | - | 4.7 | 2.10 | 4.6 | 1.93 | - | - | - | - | - | - | - | - |
| | -15 | - | - | 5.7 | 2.48 | 5.5 | 2.27 | 5.3 | 2.06 | - | - | - | - | - | - |
| | -10 | 6.9 | 2.90 | 6.7 | 2.67 | 6.5 | 2.45 | 6.2 | 2.23 | 6.1 | 1.99 | 5.9 | 1.75 | - | - |
| | -7 | 7.5 | 3.03 | 7.3 | 2.79 | 7.1 | 2.56 | 6.8 | 2.33 | 6.6 | 2.07 | 6.4 | 1.82 | - | - |
| | 2 | 6.7 | 3.69 | 6.7 | 3.33 | 6.6 | 2.96 | 6.6 | 2.60 | 6.6 | 2.30 | 6.6 | 2.00 | 6.6 | 1.70 |
| | 7 | 8.9 | 5.05 | 8.7 | 4.50 | 8.5 | 3.96 | 8.3 | 3.41 | 8.1 | 3.00 | 8.0 | 2.60 | 7.8 | 2.19 |
| | 12 | 10.5 | 5.88 | 10.2 | 5.22 | 9.9 | 4.56 | 9.6 | 3.90 | 9.4 | 3.42 | 9.3 | 2.94 | 9.1 | 2.46 |
| | 15 | 9.7 | 6.46 | 9.4 | 5.70 | 9.1 | 4.94 | 8.7 | 4.18 | 8.6 | 3.62 | 8.4 | 3.06 | 8.2 | 2.50 |
| | 20 | 10.6 | 7.14 | 10.3 | 6.27 | 9.9 | 5.40 | 9.5 | 4.53 | 9.3 | 3.91 | 9.1 | 3.29 | 8.9 | 2.67 |
| Nominal | -20 | - | - | 4.7 | 2.10 | 4.6 | 1.93 | - | - | - | - | - | - | - | - |
| | -15 | - | - | 5.7 | 2.48 | 5.5 | 2.27 | 5.3 | 2.06 | - | - | - | - | - | - |
| | -10 | 6.0 | 2.94 | 6.0 | 2.70 | 6.0 | 2.46 | 6.0 | 2.23 | 6.0 | 1.99 | 5.9 | 1.75 | - | - |
| | -7 | 6.0 | 3.29 | 6.0 | 2.98 | 6.0 | 2.67 | 6.0 | 2.36 | 6.0 | 2.09 | 6.0 | 1.82 | - | - |
| | 2 | 5.0 | 3.66 | 5.0 | 3.33 | 5.0 | 3.01 | 5.0 | 2.68 | 5.0 | 2.40 | 5.0 | 2.12 | 5.0 | 1.84 |
| | 7 | 6.0 | 5.48 | 6.0 | 4.86 | 6.0 | 4.24 | 6.0 | 3.61 | 6.0 | 3.14 | 6.0 | 2.68 | 6.0 | 2.21 |
| | 12 | 6.0 | 7.01 | 6.0 | 6.01 | 6.0 | 5.01 | 6.0 | 4.01 | 6.0 | 3.52 | 6.0 | 3.04 | 6.0 | 2.56 |
| | 15 | 6.0 | 7.39 | 6.0 | 6.36 | 6.0 | 5.33 | 6.0 | 4.30 | 6.0 | 3.72 | 6.0 | 3.14 | 6.0 | 2.57 |
| | 20 | 6.0 | 8.35 | 6.0 | 7.13 | 6.0 | 5.91 | 6.0 | 4.69 | 6.0 | 4.04 | 6.0 | 3.40 | 6.0 | 2.75 |
| Mid | -20 | - | - | 4.1 | 2.74 | 4.0 | 2.32 | - | - | - | - | - | - | - | - |
| | -15 | - | - | 4.6 | 2.76 | 4.4 | 2.45 | 4.2 | 2.14 | - | - | - | - | - | - |
| | -10 | 4.8 | 3.28 | 4.8 | 2.98 | 4.8 | 2.67 | 4.8 | 2.36 | 4.8 | 2.11 | 4.7 | 1.85 | - | - |
| | -7 | 4.8 | 3.33 | 4.8 | 3.06 | 4.8 | 2.78 | 4.8 | 2.50 | 4.8 | 2.24 | 4.8 | 1.98 | - | - |
| | 2 | 4.0 | 3.59 | 4.0 | 3.27 | 4.0 | 2.95 | 4.0 | 2.63 | 4.0 | 2.35 | 4.0 | 2.07 | 4.0 | 1.78 |
| | 7 | 4.8 | 6.01 | 4.8 | 5.21 | 4.8 | 4.41 | 4.8 | 3.60 | 4.8 | 3.16 | 4.8 | 2.72 | 4.8 | 2.27 |
| | 12 | 4.8 | 6.88 | 4.8 | 5.97 | 4.8 | 5.06 | 4.8 | 4.15 | 4.8 | 3.60 | 4.8 | 3.06 | 4.8 | 2.51 |
| | 15 | 4.8 | 7.49 | 4.8 | 6.42 | 4.8 | 5.35 | 4.8 | 4.28 | 4.8 | 3.69 | 4.8 | 3.11 | 4.8 | 2.53 |
| | 20 | 4.8 | 8.43 | 4.8 | 7.18 | 4.8 | 5.93 | 4.8 | 4.68 | 4.8 | 4.02 | 4.8 | 3.36 | 4.8 | 2.70 |
| Min | -20 | - | - | 4.1 | 2.53 | 4.0 | 2.32 | - | - | - | - | - | - | - | - |
| | -15 | - | - | 3.8 | 2.64 | 3.6 | 2.39 | 3.4 | 2.14 | - | - | - | - | - | - |
| | -10 | 4.7 | 3.14 | 4.4 | 2.88 | 4.2 | 2.62 | 3.9 | 2.36 | 3.6 | 2.11 | 3.3 | 1.85 | - | - |
| | -7 | 4.2 | 3.37 | 3.9 | 3.08 | 3.7 | 2.79 | 3.4 | 2.50 | 3.2 | 2.23 | 2.9 | 1.96 | - | - |
| | 2 | 3.1 | 4.47 | 3.0 | 4.05 | 2.9 | 3.63 | 2.8 | 3.21 | 2.7 | 2.77 | 2.6 | 2.32 | 2.5 | 1.86 |
| | 7 | 2.7 | 5.60 | 2.6 | 4.92 | 2.5 | 4.24 | 2.4 | 3.55 | 2.3 | 3.12 | 2.2 | 2.68 | 2.1 | 2.24 |
| | 12 | 3.1 | 6.78 | 3.0 | 5.89 | 2.9 | 5.00 | 2.8 | 4.10 | 2.7 | 3.57 | 2.6 | 3.04 | 2.5 | 2.50 |
| | 15 | 2.3 | 6.40 | 2.2 | 5.55 | 2.1 | 4.70 | 2.0 | 3.85 | 2.0 | 3.34 | 1.9 | 2.84 | 1.9 | 2.32 |
| | 20 | 2.5 | 7.26 | 2.4 | 6.25 | 2.3 | 5.24 | 2.2 | 4.23 | 2.1 | 3.65 | 2.0 | 3.07 | 1.9 | 2.48 |

## ■ SUZ-SWM80VA

| Water outlet temperature[°C] | | 25 | | 35 | | 40 | | 45 | | 50 | | 55 | | 60 | |
|---|---|---|---|---|---|---|---|---|---|---|---|---|---|---|---|
| Ambient temperature [°C] | | Capacity | COP | Capacity | COP | Capacity | COP | Capacity | COP | Capacity | COP | Capacity | COP | Capacity | COP |
| Max | -20 | - | - | 5.0 | 2.04 | 4.8 | 1.87 | - | - | - | - | - | - | - | - |
| | -15 | - | - | 6.0 | 2.40 | 5.8 | 2.20 | 5.6 | 2.00 | - | - | - | - | - | - |
| | -10 | 7.3 | 2.81 | 7.1 | 2.59 | 6.8 | 2.38 | 6.6 | 2.16 | 6.4 | 1.93 | 6.2 | 1.70 | - | - |
| | -7 | 8.0 | 2.93 | 7.7 | 2.71 | 7.4 | 2.48 | 7.2 | 2.25 | 7.0 | 2.01 | 6.8 | 1.76 | - | - |
| | 2 | 7.2 | 3.55 | 7.1 | 3.21 | 7.1 | 2.88 | 7.1 | 2.55 | 7.1 | 2.21 | 7.1 | 1.86 | 7.1 | 1.52 |
| | 7 | 9.2 | 4.95 | 9.0 | 4.42 | 8.8 | 3.90 | 8.6 | 3.37 | 8.4 | 3.01 | 8.2 | 2.65 | 8.0 | 2.29 |
| | 12 | 10.9 | 5.79 | 10.6 | 5.14 | 10.3 | 4.50 | 10.0 | 3.85 | 9.8 | 3.43 | 9.6 | 3.00 | 9.5 | 2.58 |
| | 15 | 10.1 | 6.37 | 9.8 | 5.62 | 9.5 | 4.88 | 9.2 | 4.13 | 9.0 | 3.66 | 8.8 | 3.18 | 8.6 | 2.71 |
| | 20 | 11.1 | 7.02 | 10.7 | 6.17 | 10.3 | 5.33 | 10.0 | 4.48 | 9.7 | 3.96 | 9.5 | 3.43 | 9.3 | 2.91 |
| Nominal | -20 | - | - | 5.0 | 2.04 | 4.8 | 1.87 | - | - | - | - | - | - | - | - |
| | -15 | - | - | 6.0 | 2.40 | 5.8 | 2.20 | 5.6 | 2.00 | - | - | - | - | - | - |
| | -10 | 6.8 | 2.86 | 6.8 | 2.62 | 6.8 | 2.38 | 6.6 | 2.16 | 6.4 | 1.93 | 6.2 | 1.70 | - | - |
| | -7 | 6.8 | 3.06 | 6.8 | 2.80 | 6.8 | 2.55 | 6.8 | 2.29 | 6.8 | 2.03 | 6.8 | 1.76 | - | - |
| | 2 | 6.5 | 3.74 | 6.5 | 3.40 | 6.5 | 3.07 | 6.5 | 2.73 | 6.5 | 2.42 | 6.5 | 2.11 | 6.5 | 1.80 |
| | 7 | 7.5 | 5.25 | 7.5 | 4.70 | 7.5 | 4.15 | 7.5 | 3.60 | 7.5 | 3.20 | 7.5 | 2.80 | 7.5 | 2.40 |
| | 12 | 7.5 | 6.74 | 7.5 | 5.89 | 7.5 | 5.05 | 7.5 | 4.20 | 7.5 | 3.70 | 7.5 | 3.19 | 7.5 | 2.69 |
| | 15 | 7.5 | 7.06 | 7.5 | 6.15 | 7.5 | 5.25 | 7.5 | 4.34 | 7.5 | 3.82 | 7.5 | 3.29 | 7.5 | 2.77 |
| | 20 | 7.5 | 7.99 | 7.5 | 6.93 | 7.5 | 5.87 | 7.5 | 4.81 | 7.5 | 4.20 | 7.5 | 3.59 | 7.5 | 2.98 |
| Mid | -20 | - | - | 4.1 | 2.50 | 4.0 | 2.29 | - | - | - | - | - | - | - | - |
| | -15 | - | - | 4.8 | 2.59 | 4.6 | 2.35 | 4.5 | 2.10 | - | - | - | - | - | - |
| | -10 | 5.4 | 3.02 | 5.4 | 2.77 | 5.4 | 2.52 | 5.3 | 2.27 | 5.1 | 2.00 | 5.0 | 1.73 | - | - |
| | -7 | 5.4 | 3.25 | 5.4 | 2.97 | 5.4 | 2.70 | 5.4 | 2.42 | 5.4 | 2.14 | 5.4 | 1.86 | - | - |
| | 2 | 5.2 | 3.67 | 5.2 | 3.34 | 5.2 | 3.02 | 5.2 | 2.69 | 5.2 | 2.39 | 5.2 | 2.09 | 5.2 | 1.79 |
| | 7 | 6.0 | 5.79 | 6.0 | 5.10 | 6.0 | 4.41 | 6.0 | 3.72 | 6.0 | 3.29 | 6.0 | 2.85 | 6.0 | 2.42 |
| | 12 | 6.0 | 7.03 | 6.0 | 6.13 | 6.0 | 5.23 | 6.0 | 4.33 | 6.0 | 3.80 | 6.0 | 3.27 | 6.0 | 2.74 |
| | 15 | 6.0 | 7.30 | 6.0 | 6.36 | 6.0 | 5.42 | 6.0 | 4.48 | 6.0 | 3.92 | 6.0 | 3.36 | 6.0 | 2.80 |
| | 20 | 6.0 | 8.27 | 6.0 | 7.15 | 6.0 | 6.04 | 6.0 | 4.92 | 6.0 | 4.28 | 6.0 | 3.64 | 6.0 | 3.00 |
| Min | -20 | - | - | 4.1 | 2.50 | 4.0 | 2.29 | - | - | - | - | - | - | - | - |
| | -15 | - | - | 3.8 | 2.61 | 3.6 | 2.37 | 3.4 | 2.12 | - | - | - | - | - | - |
| | -10 | 4.7 | 3.09 | 4.4 | 2.83 | 4.2 | 2.58 | 3.9 | 2.32 | 3.6 | 2.07 | 3.3 | 1.82 | - | - |
| | -7 | 4.2 | 3.32 | 3.9 | 3.03 | 3.7 | 2.75 | 3.4 | 2.46 | 3.2 | 2.21 | 2.9 | 1.95 | - | - |
| | 2 | 3.1 | 4.42 | 3.0 | 4.01 | 2.9 | 3.59 | 2.8 | 3.18 | 2.7 | 2.74 | 2.6 | 2.30 | 2.5 | 1.86 |
| | 7 | 2.7 | 5.58 | 2.6 | 4.90 | 2.5 | 4.22 | 2.4 | 3.54 | 2.3 | 3.11 | 2.2 | 2.67 | 2.1 | 2.24 |
| | 12 | 3.1 | 6.76 | 3.0 | 5.87 | 2.9 | 4.98 | 2.8 | 4.09 | 2.7 | 3.56 | 2.6 | 3.03 | 2.5 | 2.50 |
| | 15 | 2.3 | 6.36 | 2.2 | 5.51 | 2.1 | 4.67 | 2.0 | 3.82 | 2.0 | 3.32 | 1.9 | 2.82 | 1.9 | 2.32 |
| | 20 | 2.5 | 7.22 | 2.4 | 6.21 | 2.3 | 5.21 | 2.2 | 4.20 | 2.1 | 3.63 | 2.0 | 3.05 | 1.9 | 2.48 |

## ■ SUZ-SWM30VA

| Water outlet temperature [°C] | | 25 | | 35 | | 40 | | 45 | | 50 | | 55 | | 60 | |
|---|---|---|---|---|---|---|---|---|---|---|---|---|---|---|---|
| Ambient temperature [°C] | | Capacity | COP | Capacity | COP | Capacity | COP | Capacity | COP | Capacity | COP | Capacity | COP | Capacity | COP |
| Max | -25 | - | - | 2.3 | 1.86 | 2.2 | 1.73 | - | - | - | - | - | - | - | - |
| | -20 | - | - | 2.9 | 1.99 | 2.9 | 1.87 | 2.9 | 1.75 | - | - | - | - | - | - |
| | -15 | - | - | 3.7 | 2.31 | 3.7 | 2.15 | 3.7 | 1.98 | 3.7 | 1.85 | - | - | - | - |
| | -10 | 4.8 | 2.92 | 4.7 | 2.52 | 4.9 | 2.36 | 4.6 | 2.12 | 4.6 | 1.88 | - | - | - | - |
| | -7 | 6.3 | 3.16 | 5.8 | 2.71 | 5.6 | 2.49 | 5.3 | 2.26 | 4.6 | 2.17 | 3.8 | 2.07 | - | - |
| | 2 | 5.0 | 3.99 | 4.9 | 3.32 | 4.9 | 2.99 | 4.8 | 2.65 | 4.4 | 2.56 | 4.0 | 2.47 | 3.1 | 2.40 |
| | 7 | 6.0 | 4.76 | 5.8 | 3.91 | 5.7 | 3.49 | 5.6 | 3.06 | 5.5 | 2.80 | 5.3 | 2.54 | 4.0 | 2.39 |
| | 12 | 5.9 | 6.02 | 5.7 | 4.86 | 5.6 | 4.28 | 5.5 | 3.70 | 5.4 | 3.28 | 5.3 | 2.86 | 4.0 | 2.59 |
| | 15 | 6.6 | 6.54 | 6.3 | 5.24 | 6.2 | 4.59 | 6.0 | 3.94 | 5.7 | 3.53 | 5.3 | 3.12 | 4.0 | 2.88 |
| | 20 | 7.5 | 7.12 | 7.2 | 5.94 | 7.1 | 5.17 | 6.9 | 4.39 | 6.1 | 4.01 | 5.3 | 3.62 | 4.0 | 3.46 |
| Nominal | -25 | - | - | 2.3 | 1.86 | 2.2 | 1.73 | - | - | - | - | - | - | - | - |
| | -20 | - | - | 2.9 | 1.99 | 2.9 | 1.87 | 2.9 | 1.75 | - | - | - | - | - | - |
| | -15 | - | - | 3.0 | 2.43 | 3.0 | 2.15 | 3.0 | 2.06 | 3.0 | 1.98 | - | - | - | - |
| | -10 | 3.0 | 3.30 | 3.0 | 2.80 | 3.0 | 2.36 | 3.0 | 2.30 | 3.0 | 2.24 | - | - | - | - |
| | -7 | 3.0 | 3.74 | 3.0 | 3.14 | 3.0 | 2.84 | 3.0 | 2.54 | 3.0 | 2.32 | 3.6 | 2.10 | - | - |
| | 2 | 3.0 | 4.91 | 3.0 | 3.96 | 3.0 | 3.49 | 3.0 | 3.01 | 3.0 | 2.69 | 3.0 | 2.48 | 3.1 | 2.15 |
| | 7 | 3.0 | 6.55 | 3.0 | 5.11 | 3.0 | 4.39 | 3.0 | 3.67 | 3.0 | 3.25 | 3.6 | 2.83 | 3.6 | 2.35 |
| | 12 | 3.0 | 7.27 | 3.0 | 5.75 | 3.0 | 4.99 | 3.0 | 4.23 | 3.0 | 3.73 | 3.6 | 3.23 | 4.0 | 2.67 |
| | 15 | 3.0 | 8.16 | 3.0 | 6.39 | 3.0 | 5.51 | 3.0 | 4.62 | 3.0 | 4.06 | 3.6 | 3.50 | 4.0 | 2.89 |
| | 20 | 3.0 | 9.53 | 3.0 | 7.69 | 3.0 | 6.52 | 3.0 | 5.35 | 3.0 | 4.68 | 3.6 | 4.00 | 4.0 | 3.26 |
| Mid | -25 | - | - | 2.0 | 1.90 | 1.8 | 1.76 | - | - | - | - | - | - | - | - |
| | -20 | - | - | 2.3 | 2.08 | 2.3 | 1.94 | 2.3 | 1.80 | - | - | - | - | - | - |
| | -15 | - | - | 2.4 | 2.52 | 2.4 | 2.32 | 2.4 | 2.11 | 2.4 | 1.91 | - | - | - | - |
| | -10 | 2.4 | 3.39 | 2.4 | 2.87 | 2.4 | 2.61 | 2.4 | 2.35 | 2.4 | 2.35 | - | - | - | - |
| | -7 | 2.4 | 3.79 | 2.4 | 3.18 | 2.4 | 2.88 | 2.4 | 2.57 | 2.4 | 2.37 | 2.9 | 2.16 | - | - |
| | 2 | 2.4 | 4.87 | 2.4 | 3.97 | 2.4 | 3.52 | 2.4 | 3.07 | 2.4 | 2.79 | 2.4 | 2.50 | 2.4 | 2.18 |
| | 7 | 2.4 | 6.11 | 2.4 | 4.91 | 2.4 | 4.31 | 2.4 | 3.71 | 2.4 | 3.33 | 2.9 | 2.94 | 2.9 | 2.54 |
| | 12 | 2.4 | 7.27 | 2.4 | 5.75 | 2.4 | 4.99 | 2.4 | 4.23 | 2.4 | 3.78 | 2.9 | 3.32 | 3.2 | 2.83 |
| | 15 | 2.4 | 8.12 | 2.4 | 6.35 | 2.4 | 5.47 | 2.4 | 4.58 | 2.4 | 4.08 | 2.9 | 3.58 | 3.2 | 3.04 |
| | 20 | 2.4 | 9.41 | 2.4 | 7.59 | 2.4 | 6.43 | 2.4 | 5.27 | 2.4 | 4.66 | 2.9 | 4.05 | 3.2 | 3.40 |
| Min | -25 | - | - | 2.0 | 1.90 | 1.9 | 1.76 | - | - | - | - | - | - | - | - |
| | -20 | - | - | 1.9 | 2.20 | 1.9 | 2.08 | 1.9 | 1.95 | - | - | - | - | - | - |
| | -15 | - | - | 2.3 | 2.54 | 2.2 | 2.34 | 2.1 | 2.13 | 2.0 | 1.93 | - | - | - | - |
| | -10 | 2.4 | 3.39 | 2.4 | 2.87 | 2.4 | 2.61 | 2.4 | 2.35 | 2.4 | 2.35 | - | - | - | - |
| | -7 | 2.4 | 3.79 | 2.4 | 3.18 | 2.4 | 2.88 | 2.4 | 2.57 | 2.4 | 2.37 | 2.3 | 2.14 | - | - |
| | 2 | 2.1 | 4.92 | 2.0 | 4.02 | 2.0 | 3.57 | 1.9 | 3.12 | 1.9 | 2.85 | 1.9 | 2.57 | 1.9 | 2.30 |
| | 7 | 2.0 | 6.00 | 1.9 | 4.81 | 1.9 | 4.22 | 1.8 | 3.62 | 1.8 | 3.28 | 1.7 | 2.93 | 1.7 | 2.59 |
| | 12 | 1.9 | 6.95 | 1.8 | 5.48 | 1.8 | 4.75 | 1.7 | 4.01 | 1.7 | 3.57 | 1.6 | 3.13 | 1.6 | 2.69 |
| | 15 | 2.0 | 7.87 | 1.9 | 6.13 | 1.9 | 5.26 | 1.8 | 4.39 | 1.8 | 3.92 | 1.8 | 3.45 | 1.8 | 2.98 |
| | 20 | 2.3 | 8.84 | 2.2 | 7.48 | 2.2 | 6.31 | 2.1 | 5.14 | 2.1 | 4.54 | 2.0 | 3.94 | 2.0 | 3.34 |

## ■ SUZ-SHWM30VAH

| Water outlet temperature[°C] | | 25 | | 35 | | 40 | | 45 | | 50 | | 55 | | 60 | |
|---|---|---|---|---|---|---|---|---|---|---|---|---|---|---|---|
| Ambient temperature[°C] | | Capacity | COP | Capacity | COP | Capacity | COP | Capacity | COP | Capacity | COP | Capacity | COP | Capacity | COP |
| Max | -25 | - | - | 2.3 | 1.77 | 2.2 | 1.65 | - | - | - | - | - | - | - | - |
| | -20 | - | - | 3.4 | 1.87 | 3.4 | 1.76 | 3.4 | 1.66 | - | - | - | - | - | - |
| | -15 | - | - | 4.3 | 2.16 | 4.3 | 2.02 | 4.2 | 1.87 | 4.2 | 1.76 | - | - | - | - |
| | -10 | 5.2 | 2.70 | 5.2 | 2.34 | 5.5 | 2.18 | 5.2 | 1.99 | 5.2 | 1.99 | - | - | - | - |
| | -7 | 6.3 | 3.07 | 5.8 | 2.64 | 5.6 | 2.42 | 5.3 | 2.20 | 4.6 | 2.10 | 3.8 | 2.00 | - | - |
| | 2 | 5.0 | 3.82 | 4.9 | 3.19 | 4.9 | 2.88 | 4.8 | 2.57 | 4.4 | 2.47 | 4.0 | 2.38 | 3.1 | 2.29 |
| | 7 | 6.0 | 4.76 | 5.8 | 3.91 | 5.7 | 3.49 | 5.6 | 3.06 | 5.5 | 2.80 | 5.3 | 2.54 | 4.0 | 2.39 |
| | 12 | 5.9 | 6.02 | 5.7 | 4.86 | 5.6 | 4.28 | 5.5 | 3.70 | 5.4 | 3.28 | 5.3 | 2.86 | 4.0 | 2.59 |
| | 15 | 6.6 | 6.54 | 6.3 | 5.24 | 6.2 | 4.59 | 6.0 | 3.94 | 5.7 | 3.53 | 5.3 | 3.12 | 4.0 | 2.88 |
| | 20 | 7.5 | 7.12 | 7.2 | 5.94 | 7.1 | 5.17 | 6.9 | 4.39 | 6.1 | 4.01 | 5.3 | 3.62 | 4.0 | 3.46 |
| Nominal | -25 | - | - | 2.3 | 1.77 | 2.2 | 1.65 | - | - | - | - | - | - | - | - |
| | -20 | - | - | 3.0 | 1.90 | 3.2 | 1.78 | 3.4 | 1.66 | - | - | - | - | - | - |
| | -15 | - | - | 3.0 | 2.13 | 3.0 | 2.02 | 3.0 | 1.85 | 3.0 | 1.70 | - | - | - | - |
| | -10 | 3.0 | 2.78 | 3.0 | 2.43 | 3.0 | 2.18 | 3.0 | 2.07 | 3.0 | 2.00 | - | - | - | - |
| | -7 | 3.0 | 3.49 | 3.0 | 2.95 | 3.0 | 2.69 | 3.0 | 2.42 | 3.0 | 2.22 | 3.6 | 2.03 | - | - |
| | 2 | 3.0 | 4.50 | 3.0 | 3.67 | 3.0 | 3.25 | 3.0 | 2.84 | 3.0 | 2.60 | 3.0 | 2.36 | 3.1 | 2.06 |
| | 7 | 3.0 | 6.55 | 3.0 | 5.11 | 3.0 | 4.39 | 3.0 | 3.67 | 3.0 | 3.25 | 3.6 | 2.83 | 3.6 | 2.35 |
| | 12 | 3.0 | 7.27 | 3.0 | 5.75 | 3.0 | 4.99 | 3.0 | 4.23 | 3.0 | 3.73 | 3.6 | 3.23 | 4.0 | 2.67 |
| | 15 | 3.0 | 8.16 | 3.0 | 6.39 | 3.0 | 5.51 | 3.0 | 4.62 | 3.0 | 4.06 | 3.6 | 3.50 | 4.0 | 2.89 |
| | 20 | 3.0 | 9.53 | 3.0 | 7.69 | 3.0 | 6.52 | 3.0 | 5.35 | 3.0 | 4.68 | 3.6 | 4.00 | 4.0 | 3.26 |
| Mid | -25 | - | - | 2.0 | 1.80 | 1.7 | 1.67 | - | - | - | - | - | - | - | - |
| | -20 | - | - | 2.4 | 1.92 | 2.6 | 1.81 | 2.7 | 1.70 | - | - | - | - | - | - |
| | -15 | - | - | 2.4 | 2.29 | 2.4 | 2.12 | 2.4 | 1.94 | 2.4 | 1.77 | - | - | - | - |
| | -10 | 2.4 | 2.90 | 2.4 | 2.54 | 2.4 | 2.36 | 2.4 | 2.17 | 2.4 | 2.17 | - | - | - | - |
| | -7 | 2.4 | 3.48 | 2.4 | 2.95 | 2.4 | 2.68 | 2.4 | 2.41 | 2.4 | 2.24 | 2.9 | 2.07 | - | - |
| | 2 | 2.4 | 4.37 | 2.4 | 3.61 | 2.4 | 3.23 | 2.4 | 2.85 | 2.4 | 2.60 | 2.4 | 2.35 | 2.4 | 2.06 |
| | 7 | 2.4 | 6.11 | 2.4 | 4.91 | 2.4 | 4.31 | 2.4 | 3.71 | 2.4 | 3.33 | 2.9 | 2.94 | 2.9 | 2.54 |
| | 12 | 2.4 | 7.27 | 2.4 | 5.75 | 2.4 | 4.99 | 2.4 | 4.23 | 2.4 | 3.78 | 2.9 | 3.32 | 3.2 | 2.83 |
| | 15 | 2.4 | 8.12 | 2.4 | 6.35 | 2.4 | 5.47 | 2.4 | 4.58 | 2.4 | 4.08 | 2.9 | 3.58 | 3.2 | 3.04 |
| | 20 | 2.4 | 9.41 | 2.4 | 7.59 | 2.4 | 6.43 | 2.4 | 5.27 | 2.4 | 4.66 | 2.9 | 4.05 | 3.2 | 3.40 |
| Min | -25 | - | - | 2.0 | 1.80 | 1.9 | 1.67 | - | - | - | - | - | - | - | - |
| | -20 | - | - | 1.9 | 2.13 | 1.9 | 1.98 | 1.9 | 1.84 | - | - | - | - | - | - |
| | -15 | - | - | 2.3 | 2.38 | 2.2 | 2.19 | 2.1 | 2.01 | 2.0 | 1.82 | - | - | - | - |
| | -10 | 2.4 | 3.09 | 2.4 | 2.65 | 2.4 | 2.36 | 2.4 | 2.21 | 2.4 | 2.17 | - | - | - | - |
| | -7 | 2.4 | 3.48 | 2.4 | 2.95 | 2.4 | 2.68 | 2.4 | 2.41 | 2.4 | 2.24 | 2.3 | 2.03 | - | - |
| | 2 | 2.1 | 4.92 | 2.0 | 4.02 | 2.0 | 3.57 | 1.9 | 3.12 | 1.9 | 2.85 | 1.9 | 2.57 | 1.9 | 2.30 |
| | 7 | 2.0 | 6.00 | 1.9 | 4.81 | 1.9 | 4.22 | 1.8 | 3.62 | 1.8 | 3.28 | 1.7 | 2.93 | 1.7 | 2.59 |
| | 12 | 1.9 | 6.95 | 1.8 | 5.48 | 1.8 | 4.75 | 1.7 | 4.01 | 1.7 | 3.57 | 1.6 | 3.13 | 1.6 | 2.69 |
| | 15 | 2.0 | 7.87 | 1.9 | 6.13 | 1.9 | 5.26 | 1.8 | 4.39 | 1.8 | 3.92 | 1.8 | 3.45 | 1.8 | 2.98 |
| | 20 | 2.3 | 8.84 | 2.2 | 7.48 | 2.2 | 6.31 | 2.1 | 5.14 | 2.1 | 4.54 | 2.0 | 3.94 | 2.0 | 3.34 |

## ■ SUZ-SWM40VA2(-SC)

| Water outlet temperature[°C] | | 25 | | 35 | | 40 | | 45 | | 50 | | 55 | | 60 | |
|---|---|---|---|---|---|---|---|---|---|---|---|---|---|---|---|
| Ambient temperature[°C] | | Capacity | COP | Capacity | COP | Capacity | COP | Capacity | COP | Capacity | COP | Capacity | COP | Capacity | COP |
| Max | -25 | - | - | 2.3 | 1.86 | 2.2 | 1.73 | - | - | - | - | - | - | - | - |
| | -20 | - | - | 3.4 | 1.93 | 3.4 | 1.82 | 3.4 | 1.71 | - | - | - | - | - | - |
| | -15 | - | - | 4.3 | 2.23 | 4.3 | 2.08 | 4.2 | 1.92 | 4.2 | 1.81 | - | - | - | - |
| | -10 | 5.2 | 2.78 | 5.2 | 2.41 | 5.5 | 2.23 | 5.2 | 2.04 | 5.2 | 2.04 | - | - | - | - |
| | -7 | 7.0 | 2.94 | 6.5 | 2.53 | 6.3 | 2.33 | 6.0 | 2.12 | 4.9 | 2.10 | 3.8 | 2.07 | - | - |
| | 2 | 6.0 | 3.85 | 5.6 | 3.23 | 5.4 | 2.92 | 5.2 | 2.61 | 4.6 | 2.54 | 4.0 | 2.47 | 3.1 | 2.40 |
| | 7 | 6.9 | 4.35 | 6.7 | 3.60 | 6.6 | 3.23 | 6.5 | 2.85 | 5.9 | 2.70 | 5.3 | 2.54 | 4.0 | 2.39 |
| | 12 | 7.0 | 5.42 | 6.8 | 4.41 | 6.7 | 3.91 | 6.6 | 3.40 | 6.0 | 3.13 | 5.3 | 2.86 | 4.0 | 2.59 |
| | 15 | 7.8 | 5.82 | 7.5 | 4.71 | 7.4 | 4.16 | 7.2 | 3.60 | 6.3 | 3.36 | 5.3 | 3.12 | 4.0 | 2.88 |
| | 20 | 8.9 | 6.24 | 8.6 | 5.26 | 8.5 | 4.61 | 8.3 | 3.95 | 6.8 | 3.79 | 5.3 | 3.62 | 4.0 | 3.46 |
| Nominal | -25 | - | - | 2.3 | 1.86 | 2.2 | 1.73 | - | - | - | - | - | - | - | - |
| | -20 | - | - | 3.4 | 1.93 | 3.4 | 1.82 | 3.4 | 1.71 | - | - | - | - | - | - |
| | -15 | - | - | 4.3 | 2.23 | 4.3 | 2.08 | 4.2 | 1.92 | 4.2 | 1.77 | - | - | - | - |
| | -10 | 4.5 | 2.94 | 4.5 | 2.55 | 4.5 | 2.23 | 4.5 | 2.16 | 4.5 | 2.09 | - | - | - | - |
| | -7 | 4.5 | 3.62 | 4.5 | 2.97 | 4.5 | 2.65 | 4.5 | 2.32 | 4.2 | 2.20 | 3.8 | 2.07 | - | - |
| | 2 | 4.0 | 4.92 | 4.0 | 3.90 | 4.0 | 3.39 | 4.0 | 2.88 | 4.0 | 2.68 | 4.0 | 2.47 | 3.1 | 2.15 |
| | 7 | 3.0 | 6.55 | 3.0 | 5.11 | 3.0 | 4.39 | 3.0 | 3.67 | 3.0 | 3.23 | 3.6 | 2.79 | 3.6 | 2.35 |
| | 12 | 4.0 | 6.96 | 4.0 | 5.52 | 4.0 | 4.80 | 4.0 | 4.08 | 4.0 | 3.61 | 4.0 | 3.14 | 4.0 | 2.67 |
| | 15 | 4.0 | 7.86 | 4.0 | 6.17 | 4.0 | 5.33 | 4.0 | 4.48 | 4.0 | 3.95 | 4.0 | 3.42 | 4.0 | 2.89 |
| | 20 | 4.0 | 9.22 | 4.0 | 7.48 | 4.0 | 6.37 | 4.0 | 5.25 | 4.0 | 4.59 | 4.0 | 3.92 | 4.0 | 3.26 |
| Mid | -25 | - | - | 2.0 | 1.90 | 1.7 | 1.77 | - | - | - | - | - | - | - | - |
| | -20 | - | - | 2.7 | 2.02 | 2.7 | 1.90 | 2.7 | 1.77 | - | - | - | - | - | - |
| | -15 | - | - | 3.4 | 2.43 | 3.4 | 2.24 | 3.4 | 2.04 | 3.4 | 1.85 | - | - | - | - |
| | -10 | 3.6 | 3.12 | 3.6 | 2.71 | 3.6 | 2.51 | 3.6 | 2.30 | 3.6 | 2.30 | - | - | - | - |
| | -7 | 3.6 | 3.77 | 3.6 | 3.12 | 3.6 | 2.80 | 3.6 | 2.47 | 3.3 | 2.28 | 3.0 | 2.09 | - | - |
| | 2 | 3.2 | 4.82 | 3.2 | 3.94 | 3.2 | 3.50 | 3.2 | 3.06 | 3.2 | 2.77 | 3.2 | 2.47 | 2.4 | 2.18 |
| | 7 | 2.4 | 6.11 | 2.4 | 4.91 | 2.4 | 4.31 | 2.4 | 3.71 | 2.4 | 3.32 | 2.9 | 2.93 | 2.9 | 2.54 |
| | 12 | 3.2 | 7.22 | 3.2 | 5.72 | 3.2 | 4.97 | 3.2 | 4.22 | 3.2 | 3.76 | 3.2 | 3.29 | 3.2 | 2.83 |
| | 15 | 3.2 | 8.13 | 3.2 | 6.37 | 3.2 | 5.49 | 3.2 | 4.61 | 3.2 | 4.09 | 3.2 | 3.56 | 3.2 | 3.04 |
| | 20 | 3.2 | 9.49 | 3.2 | 7.67 | 3.2 | 6.51 | 3.2 | 5.35 | 3.2 | 4.70 | 3.2 | 4.05 | 3.2 | 3.40 |
| Min | -25 | - | - | 2.0 | 1.90 | 1.9 | 1.77 | - | - | - | - | - | - | - | - |
| | -20 | - | - | 1.9 | 2.28 | 1.9 | 2.12 | 1.9 | 1.95 | - | - | - | - | - | - |
| | -15 | - | - | 2.3 | 2.54 | 2.2 | 2.34 | 2.1 | 2.13 | 2.0 | 1.93 | - | - | - | - |
| | -10 | 2.8 | 3.34 | 2.7 | 2.84 | 2.7 | 2.59 | 2.6 | 2.34 | 2.6 | 2.34 | - | - | - | - |
| | -7 | 2.6 | 3.70 | 2.5 | 3.11 | 2.5 | 2.82 | 2.4 | 2.52 | 2.4 | 2.33 | 2.3 | 2.14 | - | - |
| | 2 | 2.1 | 4.92 | 2.0 | 4.02 | 2.0 | 3.57 | 1.9 | 3.12 | 1.9 | 2.85 | 1.9 | 2.57 | 1.9 | 2.30 |
| | 7 | 2.0 | 6.00 | 1.9 | 4.81 | 1.9 | 4.22 | 1.8 | 3.62 | 1.8 | 3.28 | 1.7 | 2.93 | 1.7 | 2.59 |
| | 12 | 1.9 | 6.95 | 1.8 | 5.48 | 1.8 | 4.75 | 1.7 | 4.01 | 1.7 | 3.57 | 1.6 | 3.13 | 1.6 | 2.69 |
| | 15 | 2.0 | 7.87 | 1.9 | 6.13 | 1.9 | 5.26 | 1.8 | 4.39 | 1.8 | 3.92 | 1.8 | 3.45 | 1.8 | 2.98 |
| | 20 | 2.3 | 8.84 | 2.2 | 7.48 | 2.2 | 6.31 | 2.1 | 5.14 | 2.1 | 4.54 | 2.0 | 3.94 | 2.0 | 3.34 |

## ■ SUZ-SHWM40VAH(-SC)

| Water outlet temperature [°C] | | 25 | | 35 | | 40 | | 45 | | 50 | | 55 | | 60 | |
|---|---|---|---|---|---|---|---|---|---|---|---|---|---|---|---|
| Ambient temperature [°C] | | Capacity | COP | Capacity | COP | Capacity | COP | Capacity | COP | Capacity | COP | Capacity | COP | Capacity | COP |
| Max | -25 | - | - | 2.7 | 1.66 | 2.5 | 1.54 | - | - | - | - | - | - | - | - |
| | -20 | - | - | 4.0 | 1.74 | 3.8 | 1.64 | 3.5 | 1.53 | - | - | - | - | - | - |
| | -15 | - | - | 5.0 | 2.01 | 4.7 | 1.87 | 4.3 | 1.72 | 4.3 | 1.58 | - | - | - | - |
| | -10 | 6.8 | 2.53 | 6.1 | 2.18 | 5.5 | 2.02 | 5.4 | 1.84 | 5.4 | 1.84 | - | - | - | - |
| | -7 | 7.4 | 2.78 | 6.5 | 2.33 | 6.1 | 2.11 | 5.6 | 1.88 | 4.8 | 1.71 | 4.0 | 1.54 | - | - |
| | 2 | 6.1 | 3.60 | 5.8 | 2.81 | 5.7 | 2.42 | 5.5 | 2.02 | 4.9 | 2.00 | 4.3 | 1.98 | 3.3 | 1.96 |
| | 7 | 7.1 | 4.27 | 7.0 | 3.39 | 7.0 | 2.95 | 6.9 | 2.51 | 6.1 | 2.45 | 5.3 | 2.39 | 3.6 | 2.33 |
| | 12 | 7.1 | 5.10 | 6.9 | 4.10 | 6.8 | 3.60 | 6.7 | 3.10 | 6.0 | 2.96 | 5.3 | 2.81 | 3.6 | 2.67 |
| | 15 | 7.7 | 5.30 | 7.5 | 4.29 | 7.4 | 3.79 | 7.3 | 3.28 | 6.3 | 3.19 | 5.3 | 3.09 | 3.6 | 3.00 |
| | 20 | 8.9 | 5.45 | 8.6 | 4.67 | 8.5 | 4.14 | 8.3 | 3.60 | 6.8 | 3.61 | 5.3 | 3.61 | 3.6 | 3.62 |
| Nominal | -25 | - | - | 2.7 | 1.66 | 2.5 | 1.54 | - | - | - | - | - | - | - | - |
| | -20 | - | - | 4.0 | 1.74 | 3.8 | 1.64 | 3.5 | 1.53 | - | - | - | - | - | - |
| | -15 | - | - | 5.0 | 2.01 | 4.7 | 1.87 | 4.3 | 1.72 | 4.3 | 1.58 | - | - | - | - |
| | -10 | 5.0 | 2.65 | 5.0 | 2.29 | 5.0 | 2.11 | 5.0 | 1.93 | 5.0 | 1.94 | - | - | - | - |
| | -7 | 5.0 | 4.03 | 5.0 | 3.00 | 5.0 | 2.49 | 5.0 | 1.97 | 4.5 | 1.76 | 4.0 | 1.54 | - | - |
| | 2 | 4.0 | 4.75 | 4.0 | 3.61 | 4.0 | 3.04 | 4.0 | 2.47 | 4.0 | 2.34 | 4.0 | 2.20 | 3.3 | 1.96 |
| | 7 | 3.0 | 6.46 | 3.0 | 4.77 | 3.0 | 3.93 | 3.0 | 3.08 | 3.3 | 2.94 | 3.6 | 2.79 | 3.6 | 2.33 |
| | 12 | 4.0 | 6.00 | 4.0 | 4.78 | 4.0 | 4.17 | 4.0 | 3.56 | 4.0 | 3.37 | 4.0 | 3.17 | 3.6 | 2.67 |
| | 15 | 4.0 | 6.23 | 4.0 | 5.03 | 4.0 | 4.43 | 4.0 | 3.83 | 4.0 | 3.64 | 4.0 | 3.44 | 3.6 | 3.00 |
| | 20 | 4.0 | 6.35 | 4.0 | 5.51 | 4.0 | 4.93 | 4.0 | 4.34 | 4.0 | 4.08 | 4.0 | 3.82 | 3.6 | 3.62 |
| Mid | -25 | - | - | 2.3 | 1.68 | 2.0 | 1.56 | - | - | - | - | - | - | - | - |
| | -20 | - | - | 3.2 | 1.94 | 3.0 | 1.76 | 2.8 | 1.59 | - | - | - | - | - | - |
| | -15 | - | - | 4.0 | 2.21 | 3.8 | 2.02 | 3.5 | 1.83 | 3.5 | 1.64 | - | - | - | - |
| | -10 | 4.0 | 3.04 | 4.0 | 2.49 | 4.0 | 2.21 | 4.0 | 1.94 | 4.0 | 1.84 | - | - | - | - |
| | -7 | 4.0 | 4.28 | 4.0 | 3.18 | 4.0 | 2.63 | 4.0 | 2.08 | 3.6 | 1.82 | 3.2 | 1.56 | - | - |
| | 2 | 3.2 | 4.86 | 3.2 | 3.71 | 3.2 | 3.14 | 3.2 | 2.56 | 3.2 | 2.33 | 3.2 | 2.09 | 2.7 | 1.86 |
| | 7 | 2.6 | 5.38 | 2.6 | 4.20 | 2.4 | 3.61 | 2.6 | 3.02 | 2.6 | 2.93 | 2.9 | 2.84 | 2.9 | 2.75 |
| | 12 | 3.2 | 5.87 | 3.2 | 4.70 | 3.2 | 4.12 | 3.2 | 3.53 | 3.2 | 3.38 | 3.2 | 3.22 | 2.9 | 3.07 |
| | 15 | 3.2 | 5.97 | 3.2 | 4.87 | 3.2 | 4.32 | 3.2 | 3.77 | 3.2 | 3.62 | 3.2 | 3.47 | 2.9 | 3.32 |
| | 20 | 3.2 | 5.88 | 3.2 | 5.19 | 3.2 | 4.69 | 3.2 | 4.19 | 3.2 | 3.99 | 3.2 | 3.79 | 2.9 | 3.59 |
| Min | -25 | - | - | 2.3 | 1.68 | 2.2 | 1.56 | - | - | - | - | - | - | - | - |
| | -20 | - | - | 2.4 | 2.00 | 2.4 | 1.85 | 2.4 | 1.69 | - | - | - | - | - | - |
| | -15 | - | - | 2.9 | 2.24 | 2.8 | 2.07 | 2.6 | 1.90 | 2.6 | 1.73 | - | - | - | - |
| | -10 | 3.5 | 3.55 | 3.4 | 2.79 | 3.3 | 2.41 | 3.3 | 2.03 | 3.3 | 1.83 | - | - | - | - |
| | -7 | 2.9 | 4.57 | 2.8 | 3.38 | 2.7 | 2.78 | 2.7 | 2.18 | 2.6 | 1.94 | 2.6 | 1.70 | - | - |
| | 2 | 2.7 | 4.97 | 2.6 | 3.84 | 2.6 | 3.27 | 2.5 | 2.70 | 2.5 | 2.37 | 2.4 | 2.04 | 2.4 | 1.71 |
| | 7 | 2.6 | 5.38 | 2.6 | 4.20 | 2.6 | 3.61 | 2.6 | 3.02 | 2.5 | 2.94 | 2.3 | 2.86 | 2.2 | 2.78 |
| | 12 | 2.6 | 5.61 | 2.5 | 4.49 | 2.5 | 3.93 | 2.4 | 3.37 | 2.3 | 3.24 | 2.2 | 3.11 | 2.1 | 2.98 |
| | 15 | 3.0 | 5.81 | 2.8 | 4.73 | 2.7 | 4.19 | 2.6 | 3.65 | 2.5 | 3.52 | 2.4 | 3.39 | 2.3 | 3.26 |
| | 20 | 3.4 | 5.56 | 3.2 | 5.19 | 3.1 | 4.70 | 3.0 | 4.20 | 2.9 | 4.03 | 2.8 | 3.85 | 2.7 | 3.68 |

## ■ SUZ-SWM60VA2(-SC)

| Water outlet temperature [°C] | | 25 | | 35 | | 40 | | 45 | | 50 | | 55 | | 60 | |
|---|---|---|---|---|---|---|---|---|---|---|---|---|---|---|---|
| Ambient temperature [°C] | | Capacity | COP | Capacity | COP | Capacity | COP | Capacity | COP | Capacity | COP | Capacity | COP | Capacity | COP |
| Max | -25 | - | - | 2.7 | 1.72 | 2.5 | 1.60 | - | - | - | - | - | - | - | - |
| | -20 | - | - | 4.0 | 1.79 | 3.8 | 1.68 | 3.5 | 1.57 | - | - | - | - | - | - |
| | -15 | - | - | 5.0 | 2.06 | 4.7 | 1.91 | 4.3 | 1.77 | 4.3 | 1.62 | - | - | - | - |
| | -10 | 6.8 | 2.58 | 6.1 | 2.23 | 5.9 | 2.17 | 5.4 | 1.88 | 5.4 | 1.76 | - | - | - | - |
| | -7 | 7.8 | 3.43 | 7.0 | 2.69 | 6.6 | 2.32 | 6.2 | 1.95 | 5.4 | 1.74 | 4.5 | 1.53 | - | - |
| | 2 | 8.3 | 4.03 | 7.3 | 3.13 | 6.8 | 2.68 | 6.3 | 2.23 | 5.7 | 2.15 | 5.0 | 2.07 | 3.9 | 1.99 |
| | 7 | 8.6 | 4.54 | 8.4 | 3.58 | 8.3 | 3.10 | 8.2 | 2.62 | 7.5 | 2.47 | 6.7 | 2.32 | 4.8 | 2.17 |
| | 12 | 8.9 | 5.17 | 8.5 | 4.15 | 8.3 | 3.64 | 8.1 | 3.13 | 7.4 | 2.98 | 6.7 | 2.83 | 4.8 | 2.68 |
| | 15 | 9.7 | 5.30 | 9.3 | 4.30 | 9.1 | 3.80 | 8.9 | 3.30 | 7.8 | 3.20 | 6.7 | 3.09 | 4.8 | 2.99 |
| | 20 | 11.1 | 5.40 | 10.7 | 4.65 | 10.5 | 4.14 | 10.3 | 3.62 | 8.5 | 3.62 | 6.7 | 3.61 | 4.8 | 3.61 |
| Nominal | -25 | - | - | 2.7 | 1.72 | 2.5 | 1.60 | - | - | - | - | - | - | - | - |
| | -20 | - | - | 4.0 | 1.79 | 3.8 | 1.68 | 3.5 | 1.57 | - | - | - | - | - | - |
| | -15 | - | - | 5.0 | 2.06 | 4.7 | 1.91 | 4.3 | 1.77 | 4.3 | 1.62 | - | - | - | - |
| | -10 | 6.0 | 3.00 | 6.0 | 2.44 | 5.9 | 2.17 | 5.4 | 1.88 | 5.4 | 1.76 | - | - | - | - |
| | -7 | 6.0 | 4.36 | 6.0 | 3.16 | 6.0 | 2.56 | 6.0 | 1.96 | 5.3 | 1.75 | 4.5 | 1.53 | - | - |
| | 2 | 6.0 | 4.86 | 6.0 | 3.62 | 6.0 | 3.00 | 6.0 | 2.38 | 5.5 | 2.23 | 5.0 | 2.07 | 3.9 | 1.99 |
| | 7 | 5.0 | 6.47 | 5.0 | 4.85 | 5.0 | 4.04 | 5.0 | 3.23 | 5.0 | 3.00 | 5.0 | 2.77 | 4.8 | 2.17 |
| | 12 | 6.0 | 6.21 | 6.0 | 4.88 | 6.0 | 4.22 | 6.0 | 3.55 | 6.0 | 3.28 | 6.0 | 3.01 | 4.8 | 2.68 |
| | 15 | 6.0 | 6.55 | 6.0 | 5.22 | 6.0 | 4.56 | 6.0 | 3.89 | 6.0 | 3.58 | 6.0 | 3.27 | 4.8 | 2.99 |
| | 20 | 6.0 | 6.85 | 6.0 | 5.87 | 6.0 | 5.20 | 6.0 | 4.53 | 6.0 | 4.17 | 6.0 | 3.80 | 4.8 | 3.61 |
| Mid | -25 | - | - | 2.3 | 1.76 | 2.0 | 1.63 | - | - | - | - | - | - | - | - |
| | -20 | - | - | 3.2 | 2.07 | 3.0 | 1.85 | 2.8 | 1.63 | - | - | - | - | - | - |
| | -15 | - | - | 4.0 | 2.35 | 3.8 | 2.11 | 3.5 | 1.88 | 3.5 | 1.64 | - | - | - | - |
| | -10 | 4.8 | 3.39 | 4.8 | 2.65 | 4.7 | 2.28 | 4.3 | 1.91 | 4.3 | 1.71 | - | - | - | - |
| | -7 | 4.8 | 4.33 | 4.8 | 3.19 | 4.8 | 2.62 | 4.8 | 2.05 | 4.2 | 1.83 | 3.6 | 1.61 | - | - |
| | 2 | 4.8 | 5.19 | 4.8 | 3.86 | 4.8 | 3.20 | 4.8 | 2.53 | 4.4 | 2.31 | 4.0 | 2.09 | 3.1 | 1.87 |
| | 7 | 4.0 | 6.16 | 4.0 | 4.74 | 4.0 | 4.03 | 4.0 | 3.32 | 4.0 | 3.13 | 4.0 | 2.94 | 3.8 | 2.75 |
| | 12 | 4.8 | 6.40 | 4.8 | 5.05 | 4.8 | 4.38 | 4.8 | 3.70 | 4.8 | 3.46 | 4.8 | 3.22 | 3.8 | 2.98 |
| | 15 | 4.8 | 6.63 | 4.8 | 5.32 | 4.8 | 4.67 | 4.8 | 4.01 | 4.8 | 3.77 | 4.8 | 3.53 | 3.8 | 3.29 |
| | 20 | 4.8 | 6.72 | 4.8 | 5.83 | 4.8 | 5.21 | 4.8 | 4.59 | 4.8 | 4.31 | 4.8 | 4.03 | 3.8 | 3.75 |
| Min | -25 | - | - | 2.3 | 1.76 | 2.2 | 1.63 | - | - | - | - | - | - | - | - |
| | -20 | - | - | 2.4 | 2.11 | 2.4 | 1.90 | 2.4 | 1.69 | - | - | - | - | - | - |
| | -15 | - | - | 2.9 | 2.35 | 2.8 | 2.13 | 2.6 | 1.90 | 2.6 | 1.68 | - | - | - | - |
| | -10 | 3.5 | 3.84 | 3.4 | 2.93 | 3.3 | 2.48 | 3.3 | 2.03 | 3.3 | 1.75 | - | - | - | - |
| | -7 | 2.9 | 5.10 | 2.8 | 3.64 | 2.7 | 2.91 | 2.7 | 2.18 | 2.6 | 1.94 | 2.6 | 1.70 | - | - |
| | 2 | 2.7 | 5.72 | 2.6 | 4.21 | 2.6 | 3.46 | 2.5 | 2.70 | 2.5 | 2.37 | 2.4 | 2.04 | 2.4 | 1.71 |
| | 7 | 2.8 | 5.80 | 2.7 | 4.49 | 2.7 | 3.84 | 2.6 | 3.18 | 2.5 | 3.02 | 2.3 | 2.86 | 2.2 | 2.70 |
| | 12 | 2.6 | 5.61 | 2.5 | 4.49 | 2.5 | 3.93 | 2.4 | 3.37 | 2.3 | 3.24 | 2.2 | 3.11 | 2.1 | 2.98 |
| | 15 | 3.0 | 5.81 | 2.8 | 4.73 | 2.7 | 4.19 | 2.6 | 3.65 | 2.5 | 3.52 | 2.4 | 3.39 | 2.3 | 3.26 |
| | 20 | 3.4 | 5.65 | 3.2 | 5.24 | 3.1 | 4.72 | 3.0 | 4.20 | 2.9 | 4.03 | 2.8 | 3.85 | 2.7 | 3.68 |

## ■ SUZ-SHWM60VAH(-SC)

| Water outlet temperature[°C] | | 25 | | 35 | | 40 | | 45 | | 50 | | 55 | | 60 | |
|---|---|---|---|---|---|---|---|---|---|---|---|---|---|---|---|
| Ambient temperature[°C] | | Capacity | COP | Capacity | COP | Capacity | COP | Capacity | COP | Capacity | COP | Capacity | COP | Capacity | COP |
| Max | -25 | - | - | 4.8 | 1.73 | 4.4 | 1.57 | - | - | - | - | - | - | - | - |
| | -20 | - | - | 6.0 | 1.87 | 5.6 | 1.74 | 5.2 | 1.36 | - | - | - | - | - | - |
| | -15 | - | - | 6.6 | 2.05 | 6.6 | 1.97 | 5.7 | 1.47 | 5.3 | 1.35 | 4.8 | 1.23 | - | - |
| | -10 | 8.2 | 2.69 | 7.6 | 2.17 | 7.3 | 1.91 | 7.0 | 1.65 | 6.4 | 1.55 | 5.7 | 1.44 | - | - |
| | -7 | 8.2 | 3.16 | 7.6 | 2.58 | 7.3 | 2.29 | 7.0 | 2.00 | 6.6 | 1.84 | 6.1 | 1.68 | - | - |
| | 2 | 7.8 | 3.74 | 7.4 | 3.13 | 7.2 | 2.83 | 7.0 | 2.52 | 6.5 | 2.27 | 6.0 | 2.02 | 5.0 | 1.78 |
| | 7 | 8.9 | 4.93 | 8.6 | 4.04 | 8.5 | 3.60 | 8.3 | 3.15 | 7.5 | 2.90 | 6.7 | 2.64 | 4.8 | 2.39 |
| | 12 | 8.9 | 6.25 | 8.5 | 5.04 | 8.3 | 4.44 | 8.1 | 3.83 | 7.4 | 3.47 | 6.7 | 3.11 | 4.8 | 2.75 |
| | 15 | 9.7 | 6.85 | 9.3 | 5.50 | 9.1 | 4.83 | 8.9 | 4.15 | 7.8 | 3.79 | 6.7 | 3.42 | 4.8 | 3.06 |
| | 20 | 11.1 | 7.47 | 10.7 | 6.27 | 10.5 | 5.48 | 10.3 | 4.68 | 8.5 | 4.32 | 6.7 | 3.95 | 4.8 | 3.59 |
| Nominal | -25 | - | - | 4.8 | 1.73 | 4.4 | 1.57 | - | - | - | - | - | - | - | - |
| | -20 | - | - | 6.0 | 1.87 | 5.6 | 1.74 | 5.2 | 1.61 | - | - | - | - | - | - |
| | -15 | - | - | 6.0 | 2.09 | 6.0 | 1.78 | 5.7 | 1.47 | 5.3 | 1.35 | 4.8 | 1.23 | - | - |
| | -10 | 6.0 | 3.01 | 6.0 | 2.38 | 6.0 | 2.07 | 6.0 | 1.75 | 5.9 | 1.60 | 5.7 | 1.44 | - | - |
| | -7 | 6.0 | 3.64 | 6.0 | 2.87 | 6.0 | 2.49 | 6.0 | 2.10 | 6.0 | 1.84 | 6.0 | 1.69 | - | - |
| | 2 | 6.0 | 4.38 | 6.0 | 3.47 | 6.0 | 3.01 | 6.0 | 2.56 | 6.0 | 2.27 | 6.0 | 2.18 | 5.0 | 1.78 |
| | 7 | 5.0 | 6.31 | 5.0 | 4.95 | 5.0 | 4.27 | 5.0 | 3.59 | 5.0 | 3.27 | 5.0 | 2.94 | 4.8 | 2.39 |
| | 12 | 6.0 | 7.29 | 6.0 | 5.73 | 6.0 | 4.95 | 6.0 | 4.17 | 6.0 | 3.68 | 6.0 | 3.19 | 4.8 | 2.75 |
| | 15 | 6.0 | 8.34 | 6.0 | 6.49 | 6.0 | 5.57 | 6.0 | 4.64 | 6.0 | 4.08 | 6.0 | 3.51 | 4.8 | 3.06 |
| | 20 | 6.0 | 9.97 | 6.0 | 7.98 | 6.0 | 6.73 | 6.0 | 5.47 | 6.0 | 4.76 | 6.0 | 4.04 | 4.8 | 3.59 |
| Mid | -25 | - | - | 3.8 | 1.61 | 3.6 | 1.46 | - | - | - | - | - | - | - | - |
| | -20 | - | - | 4.8 | 1.86 | 4.5 | 1.57 | 4.2 | 1.28 | - | - | - | - | - | - |
| | -15 | - | - | 4.8 | 2.19 | 4.8 | 1.87 | 4.6 | 1.54 | 4.2 | 1.22 | 3.8 | 1.28 | - | - |
| | -10 | 4.8 | 3.18 | 4.8 | 2.52 | 4.8 | 2.19 | 4.8 | 1.86 | 4.7 | 1.68 | 4.6 | 1.49 | - | - |
| | -7 | 4.8 | 3.68 | 4.8 | 2.95 | 4.8 | 2.59 | 4.8 | 2.22 | 4.8 | 2.00 | 4.8 | 1.78 | - | - |
| | 2 | 4.8 | 4.51 | 4.8 | 3.65 | 4.8 | 3.22 | 4.8 | 2.79 | 4.8 | 2.51 | 4.8 | 2.23 | 4.0 | 1.95 |
| | 7 | 4.0 | 6.32 | 4.0 | 4.96 | 4.0 | 4.28 | 4.0 | 3.60 | 4.0 | 3.28 | 4.0 | 2.95 | 3.8 | 2.63 |
| | 12 | 4.8 | 7.51 | 4.8 | 5.88 | 4.8 | 5.07 | 4.8 | 4.25 | 4.8 | 3.78 | 4.8 | 3.30 | 3.8 | 2.83 |
| | 15 | 4.8 | 8.57 | 4.8 | 6.63 | 4.8 | 5.66 | 4.8 | 4.69 | 4.8 | 4.14 | 4.8 | 3.59 | 3.8 | 3.04 |
| | 20 | 4.8 | 10.18 | 4.8 | 8.10 | 4.8 | 6.79 | 4.8 | 5.48 | 4.8 | 4.79 | 4.8 | 4.09 | 3.8 | 3.40 |
| Min | -25 | - | - | 3.8 | 1.61 | 3.6 | 1.46 | - | - | - | - | - | - | - | - |
| | -20 | - | - | 3.9 | 2.61 | 3.6 | 2.19 | 3.3 | 1.78 | - | - | - | - | - | - |
| | -15 | - | - | 4.2 | 2.66 | 3.8 | 2.29 | 3.4 | 1.91 | 3.0 | 1.54 | 3.2 | 1.54 | - | - |
| | -10 | 5.0 | 3.33 | 4.5 | 2.66 | 4.3 | 2.33 | 4.0 | 1.99 | 3.9 | 1.81 | 3.8 | 1.62 | - | - |
| | -7 | 4.3 | 3.70 | 3.9 | 2.95 | 3.7 | 2.58 | 3.5 | 2.20 | 3.5 | 1.99 | 3.4 | 1.78 | - | - |
| | 2 | 4.1 | 5.22 | 3.8 | 4.17 | 3.7 | 3.65 | 3.5 | 3.12 | 3.4 | 2.83 | 3.3 | 2.54 | 3.2 | 2.25 |
| | 7 | 3.8 | 6.33 | 3.6 | 4.98 | 3.5 | 4.31 | 3.4 | 3.63 | 3.4 | 3.28 | 3.3 | 2.93 | 3.3 | 2.58 |
| | 12 | 3.6 | 7.58 | 3.4 | 5.84 | 3.3 | 4.97 | 3.2 | 4.10 | 3.2 | 3.67 | 3.1 | 3.24 | 3.1 | 2.81 |
| | 15 | 4.0 | 8.69 | 3.8 | 6.61 | 3.7 | 5.57 | 3.6 | 4.53 | 3.5 | 4.03 | 3.4 | 3.53 | 3.3 | 3.03 |
| | 20 | 4.7 | 10.02 | 4.4 | 8.28 | 4.3 | 6.86 | 4.1 | 5.43 | 4.0 | 4.77 | 3.9 | 4.10 | 3.8 | 3.44 |

## ■ SUZ-SWM80VA2

| Water outlet temperature[°C] | | 25 | | 35 | | 40 | | 45 | | 50 | | 55 | | 60 | |
|---|---|---|---|---|---|---|---|---|---|---|---|---|---|---|---|
| Ambient temperature[°C] | | Capacity | COP | Capacity | COP | Capacity | COP | Capacity | COP | Capacity | COP | Capacity | COP | Capacity | COP |
| Max | -25 | - | - | 4.8 | 1.81 | 4.4 | 1.64 | - | - | - | - | - | - | - | - |
| | -20 | - | - | 6.0 | 1.94 | 5.6 | 1.81 | 5.2 | 1.67 | - | - | - | - | - | - |
| | -15 | - | - | 7.0 | 2.26 | 6.6 | 2.05 | 6.1 | 1.83 | 6.0 | 1.67 | 5.9 | 1.50 | - | - |
| | -10 | 8.6 | 2.82 | 8.0 | 2.36 | 7.3 | 2.20 | 7.0 | 1.90 | 6.7 | 1.73 | 6.3 | 1.56 | - | - |
| | -7 | 9.0 | 3.30 | 8.0 | 2.63 | 7.7 | 2.30 | 7.4 | 1.96 | 7.0 | 1.78 | 6.6 | 1.59 | - | - |
| | 2 | 8.8 | 3.78 | 8.4 | 3.15 | 8.2 | 2.84 | 8.0 | 2.52 | 7.8 | 2.33 | 7.5 | 2.13 | 6.5 | 1.94 |
| | 7 | 10.4 | 4.58 | 10.1 | 3.79 | 10.0 | 3.40 | 9.8 | 3.00 | 9.0 | 2.77 | 8.2 | 2.54 | 6.0 | 2.31 |
| | 12 | 10.5 | 5.90 | 10.1 | 4.79 | 9.9 | 4.24 | 9.7 | 3.68 | 9.0 | 3.36 | 8.2 | 3.03 | 6.0 | 2.71 |
| | 15 | 11.5 | 6.41 | 11.0 | 5.19 | 10.8 | 4.58 | 10.5 | 3.97 | 9.4 | 3.67 | 8.2 | 3.36 | 6.0 | 3.06 |
| | 20 | 13.2 | 6.94 | 12.7 | 5.87 | 12.5 | 5.16 | 12.2 | 4.44 | 10.2 | 4.18 | 8.2 | 3.92 | 6.0 | 3.66 |
| Nominal | -25 | - | - | 4.8 | 1.81 | 4.4 | 1.64 | - | - | - | - | - | - | - | - |
| | -20 | - | - | 6.0 | 1.94 | 5.6 | 1.81 | 5.2 | 1.67 | - | - | - | - | - | - |
| | -15 | - | - | 7.0 | 2.26 | 6.6 | 2.05 | 6.1 | 1.83 | 6.0 | 1.67 | 5.9 | 1.50 | - | - |
| | -10 | 7.0 | 2.80 | 7.0 | 2.35 | 7.0 | 2.13 | 7.0 | 1.90 | 6.7 | 1.73 | 6.3 | 1.56 | - | - |
| | -7 | 7.0 | 3.79 | 7.0 | 2.90 | 7.0 | 2.46 | 7.0 | 2.01 | 7.0 | 1.78 | 6.6 | 1.59 | - | - |
| | 2 | 7.5 | 4.39 | 7.5 | 3.50 | 7.5 | 3.06 | 7.5 | 2.61 | 7.8 | 2.33 | 7.5 | 2.17 | 6.5 | 1.94 |
| | 7 | 6.0 | 6.63 | 6.0 | 5.10 | 6.0 | 4.34 | 6.0 | 3.57 | 6.0 | 3.29 | 6.0 | 3.00 | 6.0 | 2.31 |
| | 12 | 7.5 | 7.01 | 7.5 | 5.54 | 7.5 | 4.81 | 7.5 | 4.07 | 7.5 | 3.60 | 7.5 | 3.12 | 6.0 | 2.71 |
| | 15 | 7.5 | 8.12 | 7.5 | 6.34 | 7.5 | 5.45 | 7.5 | 4.56 | 7.5 | 4.02 | 7.5 | 3.47 | 6.0 | 3.06 |
| | 20 | 7.5 | 9.79 | 7.5 | 7.88 | 7.5 | 6.67 | 7.5 | 5.45 | 7.5 | 4.74 | 7.5 | 4.03 | 6.0 | 3.66 |
| Mid | -25 | - | - | 3.8 | 1.83 | 3.6 | 1.66 | - | - | - | - | - | - | - | - |
| | -20 | - | - | 4.8 | 2.07 | 4.5 | 1.75 | 4.2 | 1.43 | - | - | - | - | - | - |
| | -15 | - | - | 5.6 | 2.31 | 5.2 | 1.97 | 4.9 | 1.62 | 4.8 | 1.28 | 4.7 | 1.30 | - | - |
| | -10 | 5.6 | 3.22 | 5.6 | 2.55 | 5.6 | 2.22 | 5.6 | 1.88 | 5.3 | 1.72 | 5.0 | 1.55 | - | - |
| | -7 | 6.2 | 3.73 | 5.9 | 2.92 | 5.6 | 2.52 | 5.6 | 2.11 | 5.6 | 1.90 | 5.3 | 1.68 | - | - |
| | 2 | 6.0 | 4.45 | 6.0 | 3.66 | 6.0 | 3.27 | 6.0 | 2.87 | 6.2 | 2.60 | 6.0 | 2.32 | 5.2 | 2.05 |
| | 7 | 4.8 | 6.34 | 4.8 | 5.00 | 4.8 | 4.33 | 4.8 | 3.66 | 4.8 | 3.34 | 4.8 | 3.01 | 4.8 | 2.69 |
| | 12 | 6.0 | 7.53 | 6.0 | 5.90 | 6.0 | 5.09 | 6.0 | 4.27 | 6.0 | 3.79 | 6.0 | 3.31 | 4.8 | 2.83 |
| | 15 | 6.0 | 8.64 | 6.0 | 6.70 | 6.0 | 5.73 | 6.0 | 4.76 | 6.0 | 4.20 | 6.0 | 3.64 | 4.8 | 3.08 |
| | 20 | 6.0 | 10.36 | 6.0 | 8.27 | 6.0 | 6.95 | 6.0 | 5.63 | 6.0 | 4.92 | 6.0 | 4.20 | 4.8 | 3.49 |
| Min | -25 | - | - | 3.8 | 1.83 | 3.6 | 1.66 | - | - | - | - | - | - | - | - |
| | -20 | - | - | 3.9 | 2.61 | 3.6 | 2.19 | 3.3 | 1.78 | - | - | - | - | - | - |
| | -15 | - | - | 4.2 | 2.66 | 3.8 | 2.29 | 3.4 | 1.91 | 3.0 | 1.54 | 3.2 | 1.54 | - | - |
| | -10 | 5.0 | 3.33 | 4.5 | 2.66 | 4.3 | 2.33 | 4.0 | 1.99 | 3.9 | 1.81 | 3.8 | 1.62 | - | - |
| | -7 | 4.3 | 3.70 | 3.9 | 2.95 | 3.7 | 2.58 | 3.5 | 2.20 | 3.5 | 1.99 | 3.4 | 1.78 | - | - |
| | 2 | 4.1 | 5.22 | 3.8 | 4.17 | 3.7 | 3.65 | 3.5 | 3.12 | 3.4 | 2.83 | 3.3 | 2.54 | 3.2 | 2.25 |
| | 7 | 3.8 | 6.33 | 3.6 | 4.98 | 3.5 | 4.31 | 3.4 | 3.63 | 3.4 | 3.28 | 3.3 | 2.93 | 3.3 | 2.58 |
| | 12 | 3.6 | 7.58 | 3.4 | 5.84 | 3.3 | 4.97 | 3.2 | 4.10 | 3.2 | 3.67 | 3.1 | 3.24 | 3.1 | 2.81 |
| | 15 | 4.0 | 8.69 | 3.8 | 6.61 | 3.7 | 5.57 | 3.6 | 4.53 | 3.5 | 4.03 | 3.4 | 3.53 | 3.3 | 3.03 |
| | 20 | 4.7 | 10.02 | 4.4 | 8.28 | 4.3 | 6.86 | 4.1 | 5.43 | 4.0 | 4.77 | 3.9 | 4.10 | 3.8 | 3.44 |

## ■ SUZ-SWM80VAH2

| Water outlet temperature [°C] | | 25 | | 35 | | 40 | | 45 | | 50 | | 55 | | 60 | |
|---|---|---|---|---|---|---|---|---|---|---|---|---|---|---|---|
| Ambient temperature [°C] | | Capacity | COP | Capacity | COP | Capacity | COP | Capacity | COP | Capacity | COP | Capacity | COP | Capacity | COP |
| Max | -25 | - | - | 4.8 | 1.73 | 4.4 | 1.57 | - | - | - | - | - | - | - | - |
| | -20 | - | - | 6.0 | 1.87 | 5.6 | 1.74 | 5.2 | 1.61 | - | - | - | - | - | - |
| | -15 | - | - | 7.0 | 2.18 | 6.6 | 1.97 | 6.1 | 1.77 | 6.0 | 1.61 | 5.9 | 1.46 | - | - |
| | -10 | 8.6 | 2.71 | 8.0 | 2.28 | 7.3 | 2.12 | 7.0 | 1.84 | 6.7 | 1.68 | 6.3 | 1.51 | - | - |
| | -7 | 9.0 | 3.16 | 8.0 | 2.53 | 7.7 | 2.22 | 7.4 | 1.90 | 7.0 | 1.72 | 6.6 | 1.55 | - | - |
| | 2 | 8.8 | 3.59 | 8.4 | 3.01 | 8.2 | 2.72 | 8.0 | 2.43 | 7.8 | 2.24 | 7.5 | 2.06 | 6.5 | 1.87 |
| | 7 | 10.4 | 4.58 | 10.1 | 3.79 | 10.0 | 3.40 | 9.8 | 3.00 | 9.0 | 2.77 | 8.2 | 2.54 | 6.0 | 2.31 |
| | 12 | 10.5 | 5.90 | 10.1 | 4.79 | 9.9 | 4.24 | 9.7 | 3.68 | 9.0 | 3.36 | 8.2 | 3.03 | 6.0 | 2.71 |
| | 15 | 11.5 | 6.41 | 11.0 | 5.19 | 10.8 | 4.58 | 10.5 | 3.97 | 9.4 | 3.67 | 8.2 | 3.36 | 6.0 | 3.06 |
| | 20 | 13.2 | 6.94 | 12.7 | 5.87 | 12.5 | 5.16 | 12.2 | 4.44 | 10.2 | 4.18 | 8.2 | 3.92 | 6.0 | 3.66 |
| Nominal | -25 | - | - | 4.8 | 1.73 | 4.4 | 1.57 | - | - | - | - | - | - | - | - |
| | -20 | - | - | 6.0 | 1.87 | 5.6 | 1.74 | 5.2 | 1.61 | - | - | - | - | - | - |
| | -15 | - | - | 7.0 | 2.18 | 6.6 | 1.97 | 6.1 | 1.77 | 6.0 | 1.61 | 5.9 | 1.46 | - | - |
| | -10 | 7.0 | 2.67 | 7.0 | 2.26 | 7.0 | 2.05 | 7.0 | 1.84 | 6.7 | 1.68 | 6.3 | 1.51 | - | - |
| | -7 | 7.0 | 3.56 | 7.0 | 2.76 | 7.0 | 2.36 | 7.0 | 1.94 | 7.0 | 1.72 | 6.6 | 1.55 | - | - |
| | 2 | 7.5 | 4.10 | 7.5 | 3.31 | 7.5 | 2.91 | 7.5 | 2.51 | 7.8 | 2.24 | 7.5 | 2.10 | 6.5 | 1.87 |
| | 7 | 6.0 | 6.63 | 6.0 | 5.10 | 6.0 | 4.34 | 6.0 | 3.57 | 6.0 | 3.29 | 6.0 | 3.00 | 6.0 | 2.31 |
| | 12 | 7.5 | 7.01 | 7.5 | 5.54 | 7.5 | 4.81 | 7.5 | 4.07 | 7.5 | 3.60 | 7.5 | 3.12 | 6.0 | 2.71 |
| | 15 | 7.5 | 8.12 | 7.5 | 6.34 | 7.5 | 5.45 | 7.5 | 4.56 | 7.5 | 4.02 | 7.5 | 3.47 | 6.0 | 3.06 |
| | 20 | 7.5 | 9.79 | 7.5 | 7.88 | 7.5 | 6.67 | 7.5 | 5.45 | 7.5 | 4.74 | 7.5 | 4.03 | 6.0 | 3.66 |
| Mid | -25 | - | - | 3.8 | 1.73 | 3.6 | 1.57 | - | - | - | - | - | - | - | - |
| | -20 | - | - | 4.8 | 1.97 | 4.5 | 1.67 | 4.2 | 1.38 | - | - | - | - | - | - |
| | -15 | - | - | 5.6 | 2.20 | 5.2 | 1.88 | 4.9 | 1.56 | 4.8 | 1.24 | 4.7 | 1.26 | - | - |
| | -10 | 5.6 | 3.01 | 5.6 | 2.42 | 5.6 | 2.11 | 5.6 | 1.81 | 5.3 | 1.65 | 5.0 | 1.49 | - | - |
| | -7 | 6.2 | 3.48 | 5.9 | 2.76 | 5.6 | 2.39 | 5.6 | 2.02 | 5.6 | 1.82 | 5.3 | 1.62 | - | - |
| | 2 | 6.0 | 4.09 | 6.0 | 3.41 | 6.0 | 3.06 | 6.0 | 2.71 | 6.2 | 2.47 | 6.0 | 2.22 | 5.2 | 1.95 |
| | 7 | 4.8 | 6.34 | 4.8 | 5.00 | 4.8 | 4.33 | 4.8 | 3.66 | 4.8 | 3.34 | 4.8 | 3.01 | 4.8 | 2.69 |
| | 12 | 6.0 | 7.53 | 6.0 | 5.90 | 6.0 | 5.09 | 6.0 | 4.27 | 6.0 | 3.79 | 6.0 | 3.31 | 4.8 | 2.83 |
| | 15 | 6.0 | 8.64 | 6.0 | 6.70 | 6.0 | 5.73 | 6.0 | 4.76 | 6.0 | 4.20 | 6.0 | 3.64 | 4.8 | 3.08 |
| | 20 | 6.0 | 10.36 | 6.0 | 8.27 | 6.0 | 6.95 | 6.0 | 5.63 | 6.0 | 4.92 | 6.0 | 4.20 | 4.8 | 3.49 |
| Min | -25 | - | - | 3.8 | 1.73 | 3.6 | 1.57 | - | - | - | - | - | - | - | - |
| | -20 | - | - | 3.9 | 2.41 | 3.6 | 2.04 | 3.3 | 1.67 | - | - | - | - | - | - |
| | -15 | - | - | 4.2 | 2.47 | 3.8 | 2.13 | 3.4 | 1.79 | 3.0 | 1.45 | 3.2 | 1.46 | - | - |
| | -10 | 5.0 | 3.33 | 4.5 | 2.48 | 4.3 | 2.18 | 4.0 | 1.88 | 3.9 | 1.71 | 3.8 | 1.54 | - | - |
| | -7 | 4.3 | 3.70 | 3.9 | 2.70 | 3.7 | 2.38 | 3.5 | 2.05 | 3.5 | 1.86 | 3.4 | 1.67 | - | - |
| | 2 | 4.1 | 5.22 | 3.8 | 4.17 | 3.7 | 3.65 | 3.5 | 3.12 | 3.4 | 2.83 | 3.3 | 2.54 | 3.2 | 2.25 |
| | 7 | 3.8 | 6.33 | 3.6 | 4.98 | 3.5 | 4.31 | 3.4 | 3.63 | 3.4 | 3.28 | 3.3 | 2.93 | 3.3 | 2.58 |
| | 12 | 3.6 | 7.58 | 3.4 | 5.84 | 3.3 | 4.97 | 3.2 | 4.10 | 3.2 | 3.67 | 3.1 | 3.24 | 3.1 | 2.81 |
| | 15 | 4.0 | 8.69 | 3.8 | 6.61 | 3.7 | 5.57 | 3.6 | 4.53 | 3.5 | 4.03 | 3.4 | 3.53 | 3.3 | 3.03 |
| | 20 | 4.7 | 10.02 | 4.4 | 8.28 | 4.3 | 6.86 | 4.1 | 5.43 | 4.0 | 4.77 | 3.9 | 4.10 | 3.8 | 3.44 |

## ■ SUZ-SWM100VA

| Water outlet temperature[°C] | | 25 | | 35 | | 40 | | 45 | | 50 | | 55 | | 60 | |
|---|---|---|---|---|---|---|---|---|---|---|---|---|---|---|---|
| Ambient temperature[°C] | | Capacity | COP | Capacity | COP | Capacity | COP | Capacity | COP | Capacity | COP | Capacity | COP | Capacity | COP |
| Max | -25 | - | - | 4.8 | 1.81 | 4.4 | 1.64 | - | - | - | - | - | - | - | - |
| | -20 | - | - | 6.0 | 1.94 | 5.6 | 1.81 | 5.2 | 1.67 | - | - | - | - | - | - |
| | -15 | - | - | 7.0 | 2.26 | 6.6 | 2.05 | 6.1 | 1.83 | 6.0 | 1.67 | 5.9 | 1.50 | - | - |
| | -10 | 9.0 | 2.82 | 8.0 | 2.36 | 7.7 | 2.17 | 7.0 | 1.90 | 6.7 | 1.73 | 6.3 | 1.56 | - | - |
| | -7 | 10.1 | 3.14 | 9.0 | 2.54 | 8.5 | 2.24 | 7.9 | 1.94 | 7.4 | 1.78 | 6.8 | 1.62 | - | - |
| | 2 | 9.9 | 3.60 | 9.2 | 3.01 | 8.9 | 2.72 | 8.5 | 2.42 | 8.5 | 2.26 | 8.5 | 2.09 | 7.7 | 1.93 |
| | 7 | 12.1 | 4.30 | 11.7 | 3.56 | 11.5 | 3.19 | 11.3 | 2.82 | 10.4 | 2.63 | 9.5 | 2.43 | 7.0 | 2.24 |
| | 12 | 12.2 | 5.56 | 11.7 | 4.54 | 11.5 | 4.03 | 11.2 | 3.52 | 10.4 | 3.22 | 9.5 | 2.91 | 7.0 | 2.61 |
| | 15 | 13.1 | 6.03 | 12.7 | 4.91 | 12.5 | 4.35 | 12.3 | 3.79 | 10.9 | 3.52 | 9.5 | 3.25 | 7.0 | 2.98 |
| | 20 | 15.2 | 6.47 | 14.7 | 5.52 | 14.5 | 4.88 | 14.2 | 4.23 | 11.9 | 4.04 | 9.5 | 3.85 | 7.0 | 3.66 |
| Nominal | -25 | - | - | 4.8 | 1.81 | 4.4 | 1.64 | - | - | - | - | - | - | - | - |
| | -20 | - | - | 6.0 | 1.94 | 5.6 | 1.81 | 5.2 | 1.67 | - | - | - | - | - | - |
| | -15 | - | - | 7.0 | 2.26 | 6.6 | 2.05 | 6.1 | 1.83 | 6.0 | 1.67 | 5.9 | 1.50 | - | - |
| | -10 | 7.5 | 2.92 | 7.5 | 2.41 | 7.3 | 2.16 | 7.0 | 1.90 | 6.7 | 1.73 | 6.3 | 1.56 | - | - |
| | -7 | 7.5 | 3.71 | 7.5 | 2.85 | 7.5 | 2.42 | 7.5 | 1.99 | 7.4 | 1.78 | 6.8 | 1.62 | - | - |
| | 2 | 9.0 | 3.82 | 9.0 | 3.12 | 8.9 | 2.72 | 8.5 | 2.42 | 8.5 | 2.26 | 8.5 | 2.09 | 7.7 | 1.93 |
| | 7 | 7.5 | 6.26 | 7.5 | 4.85 | 7.5 | 4.15 | 7.5 | 3.44 | 7.5 | 3.12 | 7.5 | 2.80 | 7.0 | 2.24 |
| | 12 | 10.0 | 6.40 | 10.0 | 5.08 | 10.0 | 4.42 | 10.0 | 3.76 | 9.8 | 3.34 | 9.5 | 2.91 | 7.0 | 2.61 |
| | 15 | 10.0 | 7.37 | 10.0 | 5.81 | 10.0 | 5.03 | 10.0 | 4.25 | 9.8 | 3.75 | 9.5 | 3.25 | 7.0 | 2.98 |
| | 20 | 10.0 | 9.01 | 10.0 | 7.33 | 10.0 | 6.26 | 10.0 | 5.18 | 9.8 | 4.52 | 9.5 | 3.85 | 7.0 | 3.66 |
| Mid | -25 | - | - | 3.8 | 1.83 | 3.6 | 1.66 | - | - | - | - | - | - | - | - |
| | -20 | - | - | 4.8 | 2.07 | 4.5 | 1.75 | 4.2 | 1.43 | - | - | - | - | - | - |
| | -15 | - | - | 5.6 | 2.31 | 5.2 | 1.97 | 4.9 | 1.62 | 4.8 | 1.28 | 4.7 | 1.30 | - | - |
| | -10 | 6.0 | 3.22 | 6.0 | 2.55 | 5.8 | 2.22 | 5.6 | 1.88 | 5.3 | 1.72 | 5.0 | 1.55 | - | - |
| | -7 | 6.0 | 3.65 | 6.0 | 2.87 | 6.0 | 2.48 | 6.0 | 2.09 | 5.9 | 1.89 | 5.4 | 1.69 | - | - |
| | 2 | 7.2 | 3.93 | 7.2 | 3.36 | 7.1 | 3.08 | 6.8 | 2.79 | 6.8 | 2.58 | 6.8 | 2.36 | 6.1 | 2.15 |
| | 7 | 6.0 | 6.51 | 6.0 | 5.08 | 6.0 | 4.37 | 6.0 | 3.65 | 6.0 | 3.28 | 6.0 | 2.91 | 5.6 | 2.54 |
| | 12 | 8.0 | 6.90 | 8.0 | 5.51 | 8.0 | 4.82 | 8.0 | 4.12 | 7.8 | 3.67 | 7.6 | 3.21 | 5.6 | 2.76 |
| | 15 | 8.0 | 7.89 | 8.0 | 6.26 | 8.0 | 5.45 | 8.0 | 4.63 | 7.8 | 4.10 | 7.6 | 3.56 | 5.6 | 3.03 |
| | 20 | 8.0 | 9.60 | 8.0 | 7.84 | 8.0 | 6.71 | 8.0 | 5.57 | 7.8 | 4.88 | 7.6 | 4.18 | 5.6 | 3.49 |
| Min | -25 | - | - | 3.8 | 1.83 | 3.6 | 1.66 | - | - | - | - | - | - | - | - |
| | -20 | - | - | 3.9 | 2.61 | 3.6 | 2.19 | 3.3 | 1.78 | - | - | - | - | - | - |
| | -15 | - | - | 4.2 | 2.66 | 3.8 | 2.29 | 3.4 | 1.91 | 3.0 | 1.54 | 3.2 | 1.54 | - | - |
| | -10 | 5.0 | 3.33 | 4.5 | 2.66 | 4.3 | 2.33 | 4.0 | 1.99 | 3.9 | 1.81 | 3.8 | 1.62 | - | - |
| | -7 | 4.3 | 3.68 | 3.9 | 2.95 | 3.7 | 2.59 | 3.5 | 2.22 | 3.5 | 2.00 | 3.4 | 1.78 | - | - |
| | 2 | 4.1 | 5.22 | 3.8 | 4.17 | 3.7 | 3.65 | 3.5 | 3.12 | 3.4 | 2.83 | 3.3 | 2.54 | 3.2 | 2.25 |
| | 7 | 3.8 | 6.33 | 3.6 | 4.98 | 3.5 | 4.31 | 3.4 | 3.63 | 3.4 | 3.28 | 3.3 | 2.93 | 3.3 | 2.58 |
| | 12 | 3.6 | 7.58 | 3.4 | 5.84 | 3.3 | 4.97 | 3.2 | 4.10 | 3.2 | 3.67 | 3.1 | 3.24 | 3.1 | 2.81 |
| | 15 | 4.0 | 8.69 | 3.8 | 6.61 | 3.7 | 5.57 | 3.6 | 4.53 | 3.5 | 4.03 | 3.4 | 3.53 | 3.3 | 3.03 |
| | 20 | 4.7 | 10.02 | 4.4 | 8.28 | 4.3 | 6.86 | 4.1 | 5.43 | 4.0 | 4.77 | 3.9 | 4.10 | 3.8 | 3.44 |

## ■ SUZ-SWM100VAH

| Water outlet temperature [°C] | | 25 | | 35 | | 40 | | 45 | | 50 | | 55 | | 60 | |
|---|---|---|---|---|---|---|---|---|---|---|---|---|---|---|---|
| Ambient temperature [°C] | | Capacity | COP | Capacity | COP | Capacity | COP | Capacity | COP | Capacity | COP | Capacity | COP | Capacity | COP |
| Max | -25 | - | - | 4.8 | 1.73 | 4.4 | 1.57 | - | - | - | - | - | - | - | - |
| | -20 | - | - | 6.0 | 1.87 | 5.6 | 1.74 | 5.2 | 1.61 | - | - | - | - | - | - |
| | -15 | - | - | 7.0 | 2.18 | 6.6 | 1.97 | 6.1 | 1.77 | 6.0 | 1.61 | 5.9 | 1.46 | - | - |
| | -10 | 9.0 | 2.72 | 8.0 | 2.28 | 7.7 | 2.10 | 7.0 | 1.84 | 6.7 | 1.68 | 6.3 | 1.51 | - | - |
| | -7 | 10.1 | 3.03 | 9.0 | 2.46 | 8.5 | 2.17 | 7.9 | 1.88 | 7.4 | 1.73 | 6.8 | 1.57 | - | - |
| | 2 | 9.9 | 3.45 | 9.2 | 2.90 | 8.9 | 2.62 | 8.5 | 2.34 | 8.5 | 2.19 | 8.5 | 2.03 | 7.7 | 1.87 |
| | 7 | 12.1 | 4.30 | 11.7 | 3.56 | 11.5 | 3.19 | 11.3 | 2.82 | 10.4 | 2.63 | 9.5 | 2.43 | 7.0 | 2.24 |
| | 12 | 12.2 | 5.56 | 11.7 | 4.54 | 11.5 | 4.03 | 11.2 | 3.52 | 10.4 | 3.22 | 9.5 | 2.91 | 7.0 | 2.61 |
| | 15 | 13.1 | 6.03 | 12.7 | 4.91 | 12.5 | 4.35 | 12.3 | 3.79 | 10.9 | 3.52 | 9.5 | 3.25 | 7.0 | 2.98 |
| | 20 | 15.2 | 6.47 | 14.7 | 5.52 | 14.5 | 4.88 | 14.2 | 4.23 | 11.9 | 4.04 | 9.5 | 3.85 | 7.0 | 3.66 |
| Nominal | -25 | - | - | 4.8 | 1.73 | 4.4 | 1.57 | - | - | - | - | - | - | - | - |
| | -20 | - | - | 6.0 | 1.87 | 5.6 | 1.74 | 5.2 | 1.61 | - | - | - | - | - | - |
| | -15 | - | - | 7.0 | 2.18 | 6.6 | 1.97 | 6.1 | 1.77 | 6.0 | 1.61 | 5.9 | 1.46 | - | - |
| | -10 | 7.5 | 2.79 | 7.5 | 2.32 | 7.3 | 2.08 | 7.0 | 1.84 | 6.7 | 1.68 | 6.3 | 1.51 | - | - |
| | -7 | 7.5 | 3.50 | 7.5 | 2.73 | 7.5 | 2.33 | 7.5 | 1.93 | 7.4 | 1.73 | 6.8 | 1.57 | - | - |
| | 2 | 9.0 | 3.63 | 9.0 | 3.00 | 8.9 | 2.62 | 8.5 | 2.34 | 8.5 | 2.19 | 8.5 | 2.03 | 7.7 | 1.87 |
| | 7 | 7.5 | 6.26 | 7.5 | 4.85 | 7.5 | 4.15 | 7.5 | 3.44 | 7.5 | 3.12 | 7.5 | 2.80 | 7.0 | 2.24 |
| | 12 | 10.0 | 6.40 | 10.0 | 5.08 | 10.0 | 4.42 | 10.0 | 3.76 | 9.8 | 3.34 | 9.5 | 2.91 | 7.0 | 2.61 |
| | 15 | 10.0 | 7.37 | 10.0 | 5.81 | 10.0 | 5.03 | 10.0 | 4.25 | 9.8 | 3.75 | 9.5 | 3.25 | 7.0 | 2.98 |
| | 20 | 10.0 | 9.01 | 10.0 | 7.33 | 10.0 | 6.26 | 10.0 | 5.18 | 9.8 | 4.52 | 9.5 | 3.85 | 7.0 | 3.66 |
| Mid | -25 | - | - | 3.8 | 1.73 | 3.6 | 1.57 | - | - | - | - | - | - | - | - |
| | -20 | - | - | 4.8 | 1.97 | 4.5 | 1.67 | 4.2 | 1.38 | - | - | - | - | - | - |
| | -15 | - | - | 5.6 | 2.20 | 5.2 | 1.88 | 4.9 | 1.56 | 4.8 | 1.24 | 4.7 | 1.26 | - | - |
| | -10 | 6.0 | 3.03 | 6.0 | 2.43 | 5.8 | 2.12 | 5.6 | 1.81 | 5.3 | 1.65 | 5.0 | 1.49 | - | - |
| | -7 | 6.0 | 3.40 | 6.0 | 2.71 | 6.0 | 2.36 | 6.0 | 2.01 | 5.9 | 1.82 | 5.4 | 1.63 | - | - |
| | 2 | 7.2 | 3.69 | 7.2 | 3.18 | 7.1 | 2.92 | 6.8 | 2.66 | 6.8 | 2.46 | 6.8 | 2.27 | 6.1 | 2.06 |
| | 7 | 6.0 | 6.51 | 6.0 | 5.08 | 6.0 | 4.37 | 6.0 | 3.65 | 6.0 | 3.28 | 6.0 | 2.91 | 5.6 | 2.54 |
| | 12 | 8.0 | 6.90 | 8.0 | 5.51 | 8.0 | 4.82 | 8.0 | 4.12 | 7.8 | 3.67 | 7.6 | 3.21 | 5.6 | 2.76 |
| | 15 | 8.0 | 7.89 | 8.0 | 6.26 | 8.0 | 5.45 | 8.0 | 4.63 | 7.8 | 4.10 | 7.6 | 3.56 | 5.6 | 3.03 |
| | 20 | 8.0 | 9.60 | 8.0 | 7.84 | 8.0 | 6.71 | 8.0 | 5.57 | 7.8 | 4.88 | 7.6 | 4.18 | 5.6 | 3.49 |
| Min | -25 | - | - | 3.8 | 1.73 | 3.6 | 1.57 | - | - | - | - | - | - | - | - |
| | -20 | - | - | 3.9 | 2.41 | 3.6 | 2.04 | 3.3 | 1.67 | - | - | - | - | - | - |
| | -15 | - | - | 4.2 | 2.47 | 3.8 | 2.13 | 3.4 | 1.79 | 3.0 | 1.45 | 3.2 | 1.46 | - | - |
| | -10 | 5.0 | 3.33 | 4.5 | 2.48 | 4.3 | 2.18 | 4.0 | 1.88 | 3.9 | 1.71 | 3.8 | 1.54 | - | - |
| | -7 | 4.3 | 3.68 | 3.9 | 2.70 | 3.7 | 2.39 | 3.5 | 2.06 | 3.5 | 1.87 | 3.4 | 1.67 | - | - |
| | 2 | 4.1 | 5.22 | 3.8 | 4.17 | 3.7 | 3.65 | 3.5 | 3.12 | 3.4 | 2.83 | 3.3 | 2.54 | 3.2 | 2.25 |
| | 7 | 3.8 | 6.33 | 3.6 | 4.98 | 3.5 | 4.31 | 3.4 | 3.63 | 3.4 | 3.28 | 3.3 | 2.93 | 3.3 | 2.58 |
| | 12 | 3.6 | 7.58 | 3.4 | 5.84 | 3.3 | 4.97 | 3.2 | 4.10 | 3.2 | 3.67 | 3.1 | 3.24 | 3.1 | 2.81 |
| | 15 | 4.0 | 8.69 | 3.8 | 6.61 | 3.7 | 5.57 | 3.6 | 4.53 | 3.5 | 4.03 | 3.4 | 3.53 | 3.3 | 3.03 |
| | 20 | 4.7 | 10.02 | 4.4 | 8.28 | 4.3 | 6.86 | 4.1 | 5.43 | 4.0 | 4.77 | 3.9 | 4.10 | 3.8 | 3.44 |

## ■ PUZ-SWM60VAA

| Water outlet temperature[°C] | | 25 | | 35 | | 40 | | 45 | | 50 | | 55 | | 60 | |
|---|---|---|---|---|---|---|---|---|---|---|---|---|---|---|---|
| Ambient temperature[°C] | | Capacity | COP | Capacity | COP | Capacity | COP | Capacity | COP | Capacity | COP | Capacity | COP | Capacity | COP |
| Max | -25 | - | - | 4.4 | 1.67 | 4.2 | 1.57 | 3.9 | 1.46 | 4.0 | 1.40 | - | - | - | - |
| | -20 | - | - | 5.2 | 2.37 | 5.1 | 2.12 | 5.0 | 1.82 | 4.5 | 1.60 | - | - | - | - |
| | -15 | - | - | 5.7 | 2.63 | 5.6 | 2.37 | 5.4 | 2.07 | 5.3 | 1.82 | 4.5 | 1.62 | - | - |
| | -10 | 7.5 | 3.69 | 6.8 | 3.08 | 6.7 | 2.73 | 6.5 | 2.37 | 6.0 | 2.07 | 5.4 | 2.02 | 4.4 | 1.65 |
| | -7 | 8.0 | 3.74 | 7.6 | 3.13 | 7.2 | 2.83 | 6.8 | 2.47 | 6.4 | 2.17 | 5.5 | 2.02 | 4.6 | 1.67 |
| | 2 | 7.5 | 4.44 | 7.0 | 3.54 | 6.8 | 3.23 | 6.5 | 2.88 | 6.2 | 2.42 | 5.6 | 1.95 | 4.8 | 1.77 |
| | 7 | 9.0 | 5.56 | 8.3 | 4.75 | 8.0 | 4.19 | 7.6 | 3.59 | 7.2 | 3.18 | 6.9 | 2.68 | 6.2 | 2.37 |
| | 12 | 9.6 | 6.62 | 9.2 | 5.56 | 9.1 | 4.90 | 8.9 | 4.19 | 8.4 | 3.69 | 7.9 | 3.18 | 7.0 | 2.78 |
| | 15 | 9.9 | 7.12 | 9.6 | 5.96 | 9.5 | 5.25 | 9.3 | 4.55 | 8.8 | 3.94 | 8.3 | 3.48 | 7.3 | 3.03 |
| | 20 | 10.2 | 8.18 | 10.0 | 6.87 | 9.9 | 6.06 | 9.7 | 5.25 | 9.5 | 4.60 | 9.2 | 3.79 | 8.4 | 3.48 |
| Nominal | -25 | - | - | 4.4 | 1.67 | 4.2 | 1.57 | 4.0 | 1.46 | 4.0 | 1.40 | - | - | - | - |
| | -20 | - | - | 5.2 | 2.37 | 5.1 | 2.12 | 5.0 | 1.82 | 4.5 | 1.60 | - | - | - | - |
| | -15 | - | - | 5.7 | 2.63 | 5.6 | 2.37 | 5.4 | 2.07 | 5.3 | 1.82 | 4.5 | 1.62 | - | - |
| | -10 | 6.0 | 3.79 | 5.7 | 3.13 | 5.6 | 2.78 | 5.5 | 2.37 | 5.5 | 2.07 | 5.4 | 2.02 | 4.4 | 1.65 |
| | -7 | 6.0 | 3.89 | 6.0 | 3.15 | 6.0 | 2.83 | 6.0 | 2.47 | 6.0 | 2.17 | 5.5 | 2.02 | 4.6 | 1.67 |
| | 2 | 6.0 | 4.65 | 6.0 | 3.70 | 6.0 | 3.28 | 6.0 | 2.88 | 6.0 | 2.42 | 5.6 | 1.95 | 4.8 | 1.77 |
| | 7 | 5.0 | 5.50 | 5.0 | 5.00 | 5.0 | 4.24 | 5.0 | 3.64 | 5.0 | 3.18 | 4.0 | 2.45 | 4.0 | 2.30 |
| | 12 | 5.0 | 6.21 | 5.0 | 5.20 | 5.0 | 4.75 | 5.0 | 4.24 | 5.0 | 3.64 | 4.0 | 3.13 | 4.0 | 2.78 |
| | 15 | 5.0 | 7.02 | 5.0 | 5.86 | 5.0 | 5.15 | 5.0 | 4.44 | 5.0 | 3.89 | 4.0 | 3.48 | 4.0 | 2.98 |
| | 20 | 5.0 | 7.83 | 5.0 | 6.82 | 5.0 | 5.96 | 5.0 | 5.10 | 5.0 | 4.44 | 4.0 | 3.79 | 4.0 | 3.43 |
| Mid | -25 | - | - | 3.6 | 1.62 | 3.5 | 1.52 | 3.4 | 1.36 | 3.2 | 1.45 | - | - | - | - |
| | -20 | - | - | 4.3 | 2.37 | 4.2 | 2.12 | 4.1 | 1.82 | 4.0 | 1.52 | - | - | - | - |
| | -15 | - | - | 4.9 | 2.58 | 4.8 | 2.32 | 4.7 | 2.02 | 4.6 | 1.77 | 4.5 | 1.57 | - | - |
| | -10 | 4.8 | 3.79 | 4.6 | 3.03 | 4.5 | 2.68 | 4.4 | 2.32 | 4.4 | 2.02 | 4.3 | 1.82 | 3.5 | 1.60 |
| | -7 | 4.8 | 3.79 | 4.8 | 3.23 | 4.8 | 2.88 | 4.8 | 2.47 | 4.8 | 2.17 | 4.8 | 2.02 | 4.2 | 1.67 |
| | 2 | 4.8 | 4.70 | 4.8 | 3.74 | 4.8 | 3.33 | 4.8 | 2.88 | 4.8 | 2.47 | 4.8 | 2.17 | 4.4 | 1.87 |
| | 7 | 4.0 | 5.30 | 4.0 | 4.39 | 4.0 | 3.99 | 4.0 | 3.54 | 4.0 | 3.03 | 3.2 | 2.40 | 3.2 | 2.25 |
| | 12 | 4.0 | 5.81 | 4.0 | 4.90 | 4.0 | 4.55 | 4.0 | 4.14 | 4.0 | 3.54 | 3.2 | 3.08 | 3.2 | 2.73 |
| | 15 | 4.0 | 6.87 | 4.0 | 5.76 | 4.0 | 5.05 | 4.0 | 4.34 | 4.0 | 3.79 | 3.2 | 3.38 | 3.2 | 2.93 |
| | 20 | 4.2 | 7.52 | 4.0 | 6.67 | 4.0 | 5.81 | 4.0 | 4.95 | 4.0 | 4.24 | 3.2 | 3.69 | 3.2 | 3.38 |
| Min | -25 | - | - | 3.6 | 1.60 | 3.5 | 1.50 | 3.4 | 1.35 | 3.0 | 1.35 | - | - | - | - |
| | -20 | - | - | 4.3 | 2.35 | 4.2 | 2.10 | 4.1 | 1.80 | 3.9 | 1.50 | - | - | - | - |
| | -15 | - | - | 4.9 | 2.55 | 4.8 | 2.30 | 4.7 | 2.00 | 4.6 | 1.75 | 4.5 | 1.55 | - | - |
| | -10 | 3.8 | 3.60 | 3.5 | 2.85 | 3.4 | 2.55 | 3.3 | 2.20 | 3.2 | 1.90 | 3.1 | 1.60 | 3.0 | 1.60 |
| | -7 | 3.8 | 3.70 | 3.5 | 2.90 | 3.4 | 2.60 | 3.2 | 2.25 | 3.1 | 2.00 | 2.9 | 1.70 | 2.8 | 1.67 |
| | 2 | 3.4 | 4.60 | 3.1 | 3.60 | 2.9 | 3.20 | 2.6 | 2.75 | 2.4 | 2.05 | 2.1 | 1.80 | 2.0 | 1.92 |
| | 7 | 2.7 | 4.80 | 2.4 | 3.50 | 2.3 | 3.30 | 2.2 | 3.05 | 2.0 | 2.50 | 1.7 | 2.30 | 1.6 | 2.27 |
| | 12 | 3.3 | 5.35 | 3.0 | 4.45 | 2.8 | 4.20 | 2.6 | 3.90 | 2.2 | 3.20 | 1.8 | 2.60 | 1.8 | 2.58 |
| | 15 | 3.8 | 6.75 | 3.2 | 5.60 | 3.0 | 4.85 | 2.8 | 4.10 | 2.4 | 3.45 | 1.9 | 2.90 | 1.9 | 2.78 |
| | 20 | 4.2 | 7.45 | 3.7 | 6.55 | 3.4 | 5.65 | 3.1 | 4.75 | 2.9 | 3.90 | 2.6 | 3.30 | 2.5 | 3.38 |

## ■ PUZ-SWM80VAA PUZ-SWM80YAA

| Water outlet temperature [°C] | | 25 | | 35 | | 40 | | 45 | | 50 | | 55 | | 60 | |
|---|---|---|---|---|---|---|---|---|---|---|---|---|---|---|---|
| Ambient temperature [°C] | | Capacity | COP | Capacity | COP | Capacity | COP | Capacity | COP | Capacity | COP | Capacity | COP | Capacity | COP |
| Max | -25 | - | - | 5.0 | 1.72 | 4.9 | 1.57 | 4.7 | 1.45 | 4.0 | 1.40 | - | - | - | - |
| | -20 | - | - | 6.7 | 2.22 | 6.4 | 1.97 | 6.0 | 1.72 | 5.5 | 1.46 | - | - | - | - |
| | -15 | - | - | 7.3 | 2.53 | 7.0 | 2.27 | 6.6 | 2.02 | 6.2 | 1.77 | 5.7 | 1.57 | - | - |
| | -10 | 8.5 | 3.54 | 7.6 | 3.02 | 7.5 | 2.68 | 7.3 | 2.37 | 7.1 | 2.02 | 6.9 | 1.93 | 5.5 | 1.55 |
| | -7 | 9.4 | 3.64 | 8.8 | 3.03 | 8.6 | 2.78 | 8.4 | 2.47 | 7.3 | 2.12 | 7.1 | 1.97 | 5.7 | 1.57 |
| | 2 | 9.9 | 3.94 | 9.3 | 3.33 | 9.1 | 3.03 | 8.8 | 2.68 | 8.0 | 2.32 | 7.1 | 1.82 | 6.0 | 1.72 |
| | 7 | 9.6 | 5.45 | 8.9 | 4.65 | 8.6 | 4.09 | 8.2 | 3.48 | 7.9 | 3.13 | 7.5 | 2.58 | 6.8 | 2.32 |
| | 12 | 10.4 | 6.41 | 9.9 | 5.50 | 9.7 | 4.85 | 9.5 | 4.14 | 9.1 | 3.64 | 8.6 | 3.13 | 7.7 | 2.73 |
| | 15 | 10.7 | 7.02 | 10.4 | 5.91 | 10.2 | 5.25 | 10.0 | 4.55 | 9.5 | 3.89 | 9.0 | 3.48 | 8.0 | 2.98 |
| | 20 | 10.9 | 7.98 | 10.8 | 6.77 | 10.6 | 6.01 | 10.4 | 5.20 | 10.2 | 4.49 | 9.7 | 3.74 | 9.1 | 3.48 |
| Nominal | -25 | - | - | 5.0 | 1.72 | 4.9 | 1.57 | 4.7 | 1.45 | 4.0 | 1.40 | - | - | - | - |
| | -20 | - | - | 6.7 | 2.22 | 6.6 | 1.97 | 6.4 | 1.72 | 5.5 | 1.46 | - | - | - | - |
| | -15 | - | - | 7.3 | 2.53 | 7.0 | 2.27 | 6.6 | 2.02 | 6.2 | 1.77 | 5.7 | 1.57 | - | - |
| | -10 | 8.0 | 3.59 | 7.6 | 3.02 | 7.5 | 2.68 | 7.3 | 2.37 | 7.1 | 2.02 | 6.9 | 1.93 | 5.5 | 1.55 |
| | -7 | 8.0 | 3.74 | 8.0 | 3.10 | 8.0 | 2.83 | 8.0 | 2.47 | 7.3 | 2.12 | 7.1 | 1.97 | 5.7 | 1.57 |
| | 2 | 8.0 | 4.39 | 8.0 | 3.65 | 8.0 | 3.18 | 8.0 | 2.78 | 7.6 | 2.42 | 7.1 | 1.82 | 6.0 | 1.72 |
| | 7 | 6.0 | 5.71 | 6.0 | 5.00 | 6.0 | 4.24 | 6.0 | 3.69 | 6.0 | 3.23 | 4.0 | 2.45 | 4.0 | 2.42 |
| | 12 | 6.0 | 6.51 | 6.0 | 5.40 | 6.0 | 4.85 | 6.0 | 4.29 | 6.0 | 3.69 | 4.0 | 3.13 | 4.0 | 2.78 |
| | 15 | 6.0 | 7.12 | 6.0 | 6.01 | 6.0 | 5.30 | 6.0 | 4.60 | 6.0 | 3.99 | 4.0 | 3.48 | 4.0 | 2.98 |
| | 20 | 6.0 | 8.13 | 6.0 | 6.97 | 6.0 | 6.11 | 6.0 | 5.20 | 6.0 | 4.60 | 4.0 | 3.79 | 4.0 | 3.43 |
| Mid | -25 | - | - | 4.0 | 1.67 | 4.0 | 1.57 | 4.0 | 1.46 | 3.2 | 1.45 | - | - | - | - |
| | -20 | - | - | 5.4 | 2.37 | 5.3 | 2.12 | 5.1 | 1.82 | 5.0 | 1.52 | - | - | - | - |
| | -15 | - | - | 5.8 | 2.63 | 5.6 | 2.37 | 5.3 | 2.07 | 5.4 | 1.82 | 5.4 | 1.62 | - | - |
| | -10 | 6.4 | 3.79 | 6.1 | 3.13 | 6.0 | 2.78 | 5.8 | 2.37 | 5.8 | 2.07 | 5.8 | 1.97 | 4.4 | 1.60 |
| | -7 | 6.4 | 3.89 | 6.4 | 3.18 | 6.4 | 2.83 | 6.4 | 2.47 | 6.4 | 2.17 | 6.4 | 2.02 | 6.0 | 1.67 |
| | 2 | 6.4 | 4.60 | 6.4 | 3.64 | 6.4 | 3.28 | 6.4 | 2.88 | 6.4 | 2.53 | 6.4 | 2.12 | 6.4 | 1.82 |
| | 7 | 4.8 | 5.45 | 4.8 | 4.70 | 4.8 | 4.19 | 4.8 | 3.64 | 4.8 | 3.13 | 4.0 | 2.45 | 4.0 | 2.30 |
| | 12 | 4.8 | 6.16 | 4.8 | 5.15 | 4.8 | 4.70 | 4.8 | 4.24 | 4.8 | 3.64 | 4.0 | 3.13 | 4.0 | 2.78 |
| | 15 | 4.8 | 7.02 | 4.8 | 5.91 | 4.8 | 5.20 | 4.8 | 4.49 | 4.8 | 3.89 | 4.0 | 3.48 | 4.0 | 2.98 |
| | 20 | 4.8 | 7.78 | 4.8 | 6.82 | 4.8 | 5.96 | 4.8 | 5.05 | 4.8 | 4.39 | 4.0 | 3.79 | 4.0 | 3.43 |
| Min | -25 | - | - | 3.6 | 1.60 | 3.5 | 1.50 | 3.4 | 1.35 | 3.0 | 1.35 | - | - | - | - |
| | -20 | - | - | 4.3 | 2.35 | 4.2 | 2.10 | 4.1 | 1.80 | 3.9 | 1.50 | - | - | - | - |
| | -15 | - | - | 4.9 | 2.55 | 4.8 | 2.30 | 4.7 | 2.00 | 4.6 | 1.75 | 4.5 | 1.55 | - | - |
| | -10 | 3.8 | 3.60 | 3.5 | 2.85 | 3.4 | 2.55 | 3.3 | 2.20 | 3.2 | 1.90 | 3.1 | 1.60 | 3.0 | 1.60 |
| | -7 | 3.8 | 3.70 | 3.5 | 2.90 | 3.4 | 2.60 | 3.2 | 2.25 | 3.1 | 2.00 | 2.9 | 1.70 | 2.8 | 1.67 |
| | 2 | 3.4 | 4.60 | 3.1 | 3.60 | 2.9 | 3.20 | 2.6 | 2.75 | 2.4 | 2.05 | 2.1 | 1.80 | 2.0 | 1.92 |
| | 7 | 2.7 | 4.80 | 2.4 | 3.50 | 2.3 | 3.30 | 2.2 | 3.05 | 2.0 | 2.50 | 1.7 | 2.30 | 1.6 | 2.27 |
| | 12 | 3.3 | 5.35 | 3.0 | 4.45 | 2.8 | 4.20 | 2.6 | 3.90 | 2.2 | 3.20 | 1.8 | 2.60 | 1.8 | 2.58 |
| | 15 | 3.8 | 6.75 | 3.2 | 5.60 | 3.0 | 4.85 | 2.8 | 4.10 | 2.4 | 3.45 | 1.9 | 2.90 | 1.9 | 2.78 |
| | 20 | 4.2 | 7.45 | 3.7 | 6.55 | 3.4 | 5.65 | 3.1 | 4.75 | 2.9 | 3.90 | 2.6 | 3.30 | 2.5 | 3.38 |

## ■ PUZ-SWM100VAA PUZ-SWM100YAA

| Water outlet temperature[°C] | | 25 | | 35 | | 40 | | 45 | | 50 | | 55 | | 60 | |
|---|---|---|---|---|---|---|---|---|---|---|---|---|---|---|---|
| Ambient temperature[°C] | | Capacity | COP | Capacity | COP | Capacity | COP | Capacity | COP | Capacity | COP | Capacity | COP | Capacity | COP |
| Max | -25 | - | - | 7.0 | 1.82 | 7.0 | 1.72 | 6.9 | 1.62 | 6.0 | 1.35 | - | - | - | - |
| | -20 | - | - | 8.0 | 2.12 | 7.8 | 1.92 | 7.6 | 1.72 | 7.0 | 1.41 | - | - | - | - |
| | -15 | - | - | 9.0 | 2.22 | 8.8 | 2.07 | 8.5 | 1.87 | 7.9 | 1.67 | 7.3 | 1.57 | - | - |
| | -10 | 11.5 | 2.73 | 11.0 | 2.53 | 10.6 | 2.32 | 10.2 | 2.07 | 9.7 | 1.97 | 8.8 | 1.82 | 7.5 | 1.75 |
| | -7 | 12.4 | 2.93 | 11.9 | 2.68 | 11.5 | 2.47 | 11.0 | 2.22 | 10.0 | 2.07 | 9.0 | 1.87 | 7.8 | 1.62 |
| | 2 | 12.4 | 3.18 | 12.1 | 3.03 | 11.8 | 2.78 | 11.5 | 2.47 | 11.0 | 2.27 | 9.5 | 1.95 | 8.7 | 1.87 |
| | 7 | 11.4 | 5.56 | 10.9 | 4.70 | 10.5 | 4.04 | 10.0 | 3.38 | 9.7 | 3.08 | 9.2 | 2.47 | 8.5 | 2.27 |
| | 12 | 12.9 | 6.36 | 12.2 | 5.50 | 12.0 | 4.80 | 11.7 | 4.04 | 11.1 | 3.54 | 10.5 | 2.98 | 9.5 | 2.58 |
| | 15 | 13.4 | 6.77 | 13.0 | 5.71 | 12.7 | 5.15 | 12.4 | 4.55 | 11.8 | 4.14 | 11.1 | 3.59 | 10.0 | 2.93 |
| | 20 | 14.2 | 7.68 | 13.8 | 6.31 | 13.5 | 5.71 | 13.1 | 5.05 | 12.5 | 4.39 | 11.4 | 3.79 | 10.5 | 3.59 |
| Nominal | -25 | - | - | 7.0 | 1.82 | 7.0 | 1.72 | 6.9 | 1.62 | 6.0 | 1.35 | - | - | - | - |
| | -20 | - | - | 8.0 | 2.12 | 7.8 | 1.92 | 7.6 | 1.72 | 7.0 | 1.41 | - | - | - | - |
| | -15 | - | - | 9.0 | 2.22 | 8.8 | 2.07 | 8.5 | 1.87 | 7.9 | 1.67 | 7.3 | 1.57 | - | - |
| | -10 | 10.0 | 3.28 | 10.0 | 2.89 | 10.0 | 2.53 | 10.0 | 2.17 | 9.7 | 1.97 | 8.8 | 1.82 | 7.5 | 1.75 |
| | -7 | 10.0 | 3.54 | 10.0 | 2.95 | 10.0 | 2.68 | 10.0 | 2.37 | 10.0 | 2.07 | 9.0 | 1.87 | 7.8 | 1.62 |
| | 2 | 10.0 | 4.14 | 10.0 | 3.45 | 10.0 | 3.03 | 10.0 | 2.68 | 10.0 | 2.37 | 9.5 | 1.95 | 8.7 | 1.87 |
| | 7 | 8.0 | 5.96 | 8.0 | 5.00 | 8.0 | 4.34 | 8.0 | 3.64 | 8.0 | 3.23 | 7.0 | 2.70 | 7.0 | 2.32 |
| | 12 | 8.0 | 7.27 | 8.0 | 5.96 | 8.0 | 5.15 | 8.0 | 4.34 | 8.0 | 3.79 | 7.0 | 3.13 | 7.0 | 2.68 |
| | 15 | 8.0 | 7.58 | 8.0 | 6.26 | 8.0 | 5.56 | 8.0 | 4.85 | 8.0 | 4.29 | 7.0 | 3.69 | 7.0 | 2.98 |
| | 20 | 8.0 | 8.74 | 8.0 | 7.17 | 8.0 | 6.31 | 8.0 | 5.45 | 8.0 | 4.70 | 7.0 | 3.89 | 7.0 | 3.79 |
| Mid | -25 | - | - | 5.6 | 1.77 | 5.6 | 1.72 | 5.5 | 1.62 | 4.8 | 1.40 | - | - | - | - |
| | -20 | - | - | 6.4 | 2.37 | 6.3 | 2.12 | 6.1 | 1.82 | 5.6 | 1.52 | - | - | - | - |
| | -15 | - | - | 7.2 | 2.53 | 7.0 | 2.27 | 6.8 | 2.02 | 6.3 | 1.82 | 5.8 | 1.62 | - | - |
| | -10 | 8.0 | 3.74 | 8.0 | 3.13 | 8.0 | 2.73 | 8.0 | 2.32 | 7.8 | 2.07 | 7.4 | 1.87 | 6.0 | 1.80 |
| | -7 | 8.0 | 3.79 | 8.0 | 3.13 | 8.0 | 2.83 | 8.0 | 2.47 | 8.0 | 2.17 | 7.6 | 1.97 | 6.2 | 1.67 |
| | 2 | 8.0 | 4.49 | 8.0 | 3.64 | 8.0 | 3.28 | 8.0 | 2.88 | 8.0 | 2.53 | 8.0 | 2.17 | 7.0 | 1.97 |
| | 7 | 6.4 | 5.86 | 6.4 | 5.05 | 6.4 | 4.39 | 6.4 | 3.74 | 6.4 | 3.28 | 5.6 | 2.78 | 5.6 | 2.37 |
| | 12 | 6.4 | 7.32 | 6.4 | 5.61 | 6.4 | 5.00 | 6.4 | 4.34 | 6.4 | 3.79 | 5.6 | 3.13 | 5.6 | 2.73 |
| | 15 | 6.4 | 7.58 | 6.4 | 6.21 | 6.4 | 5.50 | 6.4 | 4.75 | 6.4 | 4.19 | 5.6 | 3.64 | 5.6 | 2.98 |
| | 20 | 6.4 | 8.43 | 6.4 | 7.12 | 6.4 | 6.26 | 6.4 | 5.35 | 6.4 | 4.65 | 5.6 | 3.84 | 5.6 | 3.74 |
| Min | -25 | - | - | 3.6 | 1.60 | 3.5 | 1.50 | 3.4 | 1.35 | 3.0 | 1.35 | - | - | - | - |
| | -20 | - | - | 4.3 | 2.35 | 4.2 | 2.10 | 4.1 | 1.80 | 3.9 | 1.50 | - | - | - | - |
| | -15 | - | - | 4.9 | 2.55 | 4.8 | 2.30 | 4.7 | 2.00 | 4.6 | 1.75 | 4.5 | 1.55 | - | - |
| | -10 | 3.8 | 3.60 | 3.5 | 2.85 | 3.4 | 2.55 | 3.3 | 2.20 | 3.2 | 1.90 | 3.1 | 1.60 | 3.0 | 1.60 |
| | -7 | 3.8 | 3.70 | 3.5 | 2.90 | 3.4 | 2.60 | 3.2 | 2.25 | 3.1 | 2.00 | 2.9 | 1.70 | 2.8 | 1.67 |
| | 2 | 3.4 | 4.60 | 3.2 | 3.60 | 2.9 | 3.20 | 2.6 | 2.75 | 2.4 | 2.05 | 2.1 | 1.80 | 2.0 | 1.92 |
| | 7 | 2.7 | 4.80 | 2.5 | 3.50 | 2.3 | 3.30 | 2.2 | 3.05 | 2.0 | 2.50 | 1.7 | 2.30 | 1.6 | 2.27 |
| | 12 | 3.3 | 5.35 | 3.0 | 4.45 | 2.8 | 4.20 | 2.6 | 3.90 | 2.2 | 3.20 | 1.8 | 2.60 | 1.8 | 2.58 |
| | 15 | 3.8 | 6.75 | 3.2 | 5.60 | 3.0 | 4.85 | 2.8 | 4.10 | 2.4 | 3.45 | 1.9 | 2.90 | 1.9 | 2.78 |
| | 20 | 4.2 | 7.45 | 3.7 | 6.55 | 3.4 | 5.65 | 3.1 | 4.75 | 2.9 | 3.90 | 2.6 | 3.30 | 2.5 | 3.38 |

## ■ PUZ-SWM120VAA PUZ-SWM120YAA

| Water outlet temperature [°C] | | 25 | | 35 | | 40 | | 45 | | 50 | | 55 | | 60 | |
|---|---|---|---|---|---|---|---|---|---|---|---|---|---|---|---|
| Ambient temperature [°C] | | Capacity | COP | Capacity | COP | Capacity | COP | Capacity | COP | Capacity | COP | Capacity | COP | Capacity | COP |
| Max | -25 | - | - | 8.2 | 1.72 | 8.1 | 1.67 | 8.0 | 1.59 | 7.0 | 1.41 | - | - | - | - |
| | -20 | - | - | 9.2 | 1.82 | 8.9 | 1.77 | 8.6 | 1.67 | 7.3 | 1.41 | - | - | - | - |
| | -15 | - | - | 10.4 | 2.12 | 10.0 | 1.97 | 9.5 | 1.82 | 8.9 | 1.62 | 8.3 | 1.47 | - | - |
| | -10 | 12.6 | 2.53 | 12.0 | 2.34 | 11.7 | 2.17 | 11.3 | 2.02 | 10.9 | 1.87 | 10.5 | 1.73 | 9.0 | 1.52 |
| | -7 | 13.0 | 2.73 | 12.5 | 2.47 | 12.2 | 2.32 | 12.0 | 2.12 | 11.4 | 1.92 | 11.0 | 1.77 | 9.7 | 1.57 |
| | 2 | 13.0 | 3.18 | 12.7 | 2.88 | 12.6 | 2.63 | 12.4 | 2.37 | 12.2 | 2.12 | 12.1 | 1.92 | 10.8 | 1.72 |
| | 7 | 13.2 | 4.95 | 12.9 | 4.14 | 12.5 | 3.64 | 12.1 | 3.13 | 11.7 | 2.88 | 11.2 | 2.58 | 10.5 | 2.22 |
| | 12 | 15.0 | 5.45 | 14.5 | 4.60 | 14.2 | 4.14 | 13.8 | 3.64 | 13.2 | 3.13 | 12.6 | 2.68 | 11.7 | 2.32 |
| | 15 | 15.9 | 5.96 | 15.4 | 5.05 | 15.1 | 4.65 | 14.7 | 4.19 | 14.0 | 3.79 | 13.3 | 3.33 | 12.4 | 2.68 |
| | 20 | 16.9 | 6.16 | 16.4 | 5.35 | 16.2 | 4.90 | 15.9 | 4.44 | 15.2 | 3.94 | 14.5 | 3.43 | 13.5 | 3.03 |
| Nominal | -25 | - | - | 8.2 | 1.72 | 8.1 | 1.67 | 8.0 | 1.59 | 7.0 | 1.41 | - | - | - | - |
| | -20 | - | - | 9.2 | 1.82 | 8.9 | 1.77 | 8.6 | 1.67 | 7.3 | 1.41 | - | - | - | - |
| | -15 | - | - | 10.4 | 2.12 | 10.0 | 1.97 | 9.5 | 1.82 | 8.9 | 1.62 | 8.3 | 1.47 | - | - |
| | -10 | 12.0 | 2.83 | 11.0 | 2.72 | 11.0 | 2.42 | 11.0 | 2.07 | 10.9 | 1.87 | 10.5 | 1.73 | 9.0 | 1.52 |
| | -7 | 12.0 | 3.23 | 12.0 | 2.70 | 12.0 | 2.47 | 12.0 | 2.17 | 11.5 | 1.97 | 11.0 | 1.77 | 9.7 | 1.57 |
| | 2 | 12.0 | 3.59 | 12.0 | 3.25 | 12.0 | 2.83 | 12.0 | 2.42 | 12.0 | 2.17 | 12.0 | 1.92 | 10.8 | 1.72 |
| | 7 | 10.0 | 5.81 | 10.0 | 4.85 | 10.0 | 4.09 | 10.0 | 3.43 | 10.0 | 3.08 | 7.0 | 2.70 | 7.0 | 2.27 |
| | 12 | 10.0 | 7.22 | 10.0 | 5.86 | 10.0 | 5.05 | 10.0 | 4.24 | 10.0 | 3.69 | 7.0 | 3.03 | 7.0 | 2.53 |
| | 15 | 10.0 | 7.52 | 10.0 | 6.21 | 10.0 | 5.50 | 10.0 | 4.80 | 10.0 | 4.24 | 7.0 | 3.64 | 7.0 | 2.93 |
| | 20 | 10.0 | 8.74 | 10.0 | 7.07 | 10.0 | 6.26 | 10.0 | 5.40 | 10.0 | 4.65 | 7.0 | 3.84 | 7.0 | 3.64 |
| Mid | -25 | - | - | 6.6 | 1.82 | 6.5 | 1.77 | 6.4 | 1.67 | 5.6 | 1.52 | - | - | - | - |
| | -20 | - | - | 7.4 | 2.22 | 7.2 | 2.02 | 6.9 | 1.77 | 5.8 | 1.52 | - | - | - | - |
| | -15 | - | - | 8.3 | 2.42 | 8.0 | 2.22 | 7.6 | 2.02 | 7.1 | 1.77 | 6.6 | 1.62 | - | - |
| | -10 | 9.6 | 3.48 | 8.8 | 3.03 | 8.8 | 2.68 | 8.8 | 2.32 | 8.7 | 2.07 | 8.4 | 1.87 | 7.2 | 1.57 |
| | -7 | 9.6 | 3.64 | 9.6 | 3.08 | 9.6 | 2.78 | 9.6 | 2.42 | 9.2 | 2.12 | 8.8 | 1.92 | 7.8 | 1.62 |
| | 2 | 9.6 | 4.29 | 9.6 | 3.54 | 9.6 | 3.18 | 9.6 | 2.78 | 9.6 | 2.47 | 9.6 | 2.12 | 8.6 | 1.92 |
| | 7 | 8.0 | 5.96 | 8.0 | 5.05 | 8.0 | 4.39 | 8.0 | 3.69 | 8.0 | 3.23 | 5.6 | 2.73 | 5.6 | 2.32 |
| | 12 | 8.0 | 7.27 | 8.0 | 5.96 | 8.0 | 5.15 | 8.0 | 4.34 | 8.0 | 3.79 | 5.6 | 3.13 | 5.6 | 2.68 |
| | 15 | 8.0 | 7.63 | 8.0 | 6.26 | 8.0 | 5.56 | 8.0 | 4.85 | 8.0 | 4.29 | 5.6 | 3.69 | 5.6 | 2.98 |
| | 20 | 8.0 | 8.79 | 8.0 | 7.17 | 8.0 | 6.31 | 8.0 | 5.45 | 8.0 | 4.70 | 5.6 | 3.89 | 5.6 | 3.79 |
| Min | -25 | - | - | 4.0 | 1.94 | 3.9 | 1.73 | 3.8 | 1.53 | 3.2 | 1.46 | - | - | - | - |
| | -20 | - | - | 4.9 | 2.45 | 4.8 | 2.19 | 4.7 | 1.89 | 4.5 | 1.58 | - | - | - | - |
| | -15 | - | - | 5.6 | 2.75 | 5.5 | 2.45 | 5.4 | 2.09 | 5.3 | 1.89 | 5.2 | 1.58 | - | - |
| | -10 | 3.8 | 3.67 | 3.6 | 2.96 | 3.5 | 2.65 | 3.4 | 2.30 | 3.3 | 1.94 | 3.1 | 1.63 | 3.0 | 1.62 |
| | -7 | 3.8 | 3.77 | 3.5 | 2.96 | 3.4 | 2.65 | 3.2 | 2.30 | 3.1 | 2.04 | 2.9 | 1.73 | 2.8 | 1.68 |
| | 2 | 3.5 | 4.79 | 3.2 | 3.67 | 3.0 | 3.26 | 2.7 | 2.81 | 2.4 | 2.35 | 2.1 | 1.84 | 2.0 | 1.94 |
| | 7 | 2.7 | 5.00 | 2.5 | 3.62 | 2.4 | 3.42 | 2.3 | 3.16 | 2.0 | 2.75 | 1.7 | 2.35 | 1.6 | 2.30 |
| | 12 | 3.4 | 7.04 | 3.1 | 4.64 | 2.9 | 4.34 | 2.7 | 4.03 | 2.3 | 3.42 | 1.9 | 2.75 | 1.8 | 2.60 |
| | 15 | 4.0 | 7.45 | 3.3 | 5.81 | 3.1 | 5.05 | 2.9 | 4.28 | 2.5 | 3.67 | 2.0 | 3.06 | 1.9 | 2.81 |
| | 20 | 4.3 | 7.75 | 3.8 | 6.78 | 3.5 | 5.87 | 3.2 | 4.95 | 2.9 | 4.18 | 2.6 | 3.37 | 2.5 | 3.42 |

## ■ PUZ-SWM140VAA PUZ-SWM140YAA

| Water outlet temperature[°C] | | 25 | | 35 | | 40 | | 45 | | 50 | | 55 | | 60 | |
|---|---|---|---|---|---|---|---|---|---|---|---|---|---|---|---|
| Ambient temperature[°C] | | Capacity | COP | Capacity | COP | Capacity | COP | Capacity | COP | Capacity | COP | Capacity | COP | Capacity | COP |
| Max | -25 | - | - | 8.4 | 1.67 | 8.4 | 1.65 | 8.3 | 1.58 | 7.8 | 1.33 | - | - | - | - |
| | -20 | - | - | 9.9 | 1.80 | 9.6 | 1.72 | 9.2 | 1.62 | 8.4 | 1.37 | - | - | - | - |
| | -15 | - | - | 12.0 | 1.90 | 11.6 | 1.92 | 10.8 | 1.85 | 9.9 | 1.57 | 8.7 | 1.42 | - | - |
| | -10 | 14.0 | 2.21 | 12.7 | 2.10 | 12.5 | 2.07 | 11.8 | 1.97 | 11.0 | 1.87 | 10.6 | 1.66 | 9.2 | 1.50 |
| | -7 | 14.0 | 2.31 | 13.2 | 2.27 | 12.5 | 2.22 | 12.1 | 2.07 | 11.5 | 1.90 | 11.1 | 1.80 | 9.9 | 1.53 |
| | 2 | 15.0 | 2.80 | 14.6 | 2.69 | 14.2 | 2.40 | 14.0 | 2.14 | 14.0 | 2.06 | 14.0 | 2.05 | 10.9 | 1.70 |
| | 7 | 15.4 | 4.14 | 14.4 | 3.54 | 14.2 | 3.28 | 13.9 | 2.98 | 13.3 | 2.63 | 12.6 | 2.42 | 11.0 | 2.12 |
| | 12 | 16.3 | 5.05 | 15.4 | 4.24 | 15.1 | 3.79 | 14.8 | 3.28 | 14.2 | 2.88 | 13.6 | 2.47 | 12.4 | 2.22 |
| | 15 | 16.7 | 5.56 | 15.8 | 4.90 | 15.5 | 4.49 | 15.2 | 4.04 | 14.6 | 3.54 | 14.0 | 3.03 | 12.8 | 2.63 |
| | 20 | 17.9 | 5.35 | 17.0 | 5.05 | 16.7 | 4.65 | 16.4 | 4.24 | 15.7 | 3.84 | 15.0 | 3.38 | 13.8 | 2.93 |
| Nominal | -25 | - | - | 8.4 | 1.67 | 8.4 | 1.65 | 8.3 | 1.58 | 7.8 | 1.33 | - | - | - | - |
| | -20 | - | - | 9.9 | 1.80 | 9.6 | 1.72 | 9.2 | 1.62 | 8.4 | 1.37 | - | - | - | - |
| | -15 | - | - | 12.0 | 1.90 | 11.6 | 1.88 | 11.0 | 1.92 | 9.9 | 1.57 | 8.7 | 1.42 | - | - |
| | -10 | 14.0 | 2.30 | 12.7 | 2.67 | 12.7 | 2.28 | 11.8 | 1.97 | 11.0 | 1.87 | 10.6 | 1.66 | 9.2 | 1.50 |
| | -7 | 14.0 | 2.89 | 13.0 | 2.50 | 13.0 | 2.33 | 12.5 | 2.07 | 11.7 | 1.90 | 11.1 | 1.80 | 9.9 | 1.53 |
| | 2 | 14.0 | 3.57 | 14.0 | 3.24 | 14.0 | 2.59 | 14.0 | 2.14 | 14.0 | 2.06 | 14.0 | 2.05 | 10.9 | 1.70 |
| | 7 | 12.0 | 5.56 | 12.0 | 4.80 | 12.0 | 3.89 | 12.0 | 3.23 | 12.0 | 2.83 | 7.0 | 2.70 | 7.0 | 2.20 |
| | 12 | 12.0 | 6.67 | 12.0 | 5.61 | 12.0 | 4.85 | 12.0 | 4.04 | 12.0 | 3.43 | 7.0 | 2.91 | 7.0 | 2.43 |
| | 15 | 12.0 | 7.27 | 12.0 | 5.96 | 12.0 | 5.30 | 12.0 | 4.65 | 12.0 | 4.09 | 7.0 | 3.50 | 7.0 | 2.82 |
| | 20 | 12.0 | 8.48 | 12.0 | 6.77 | 12.0 | 6.01 | 12.0 | 5.25 | 12.0 | 4.49 | 7.0 | 3.69 | 7.0 | 3.50 |
| Mid | -25 | - | - | 6.7 | 1.82 | 6.7 | 1.77 | 6.7 | 1.67 | 6.2 | 1.47 | - | - | - | - |
| | -20 | - | - | 7.9 | 2.17 | 7.6 | 1.97 | 7.3 | 1.77 | 6.7 | 1.52 | - | - | - | - |
| | -15 | - | - | 9.6 | 2.33 | 9.3 | 2.17 | 8.6 | 1.97 | 7.9 | 1.77 | 6.9 | 1.62 | - | - |
| | -10 | 11.2 | 3.34 | 10.2 | 2.93 | 10.2 | 2.58 | 9.4 | 2.23 | 8.8 | 1.97 | 8.5 | 1.87 | 7.4 | 1.53 |
| | -7 | 11.2 | 3.48 | 10.4 | 3.03 | 10.4 | 2.73 | 10.0 | 2.37 | 9.4 | 2.07 | 8.9 | 1.87 | 7.9 | 1.57 |
| | 2 | 11.2 | 3.94 | 11.2 | 3.43 | 11.2 | 3.08 | 11.2 | 2.68 | 11.2 | 2.38 | 11.2 | 2.07 | 8.7 | 1.87 |
| | 7 | 9.6 | 6.06 | 9.6 | 5.00 | 9.6 | 4.29 | 9.6 | 3.59 | 9.6 | 3.13 | 5.6 | 2.62 | 5.6 | 2.23 |
| | 12 | 9.6 | 7.17 | 9.6 | 6.01 | 9.6 | 5.20 | 9.6 | 4.34 | 9.6 | 3.69 | 5.6 | 3.01 | 5.6 | 2.57 |
| | 15 | 9.6 | 7.58 | 9.6 | 6.26 | 9.6 | 5.56 | 9.6 | 4.85 | 9.6 | 4.29 | 5.6 | 3.54 | 5.6 | 2.86 |
| | 20 | 9.6 | 8.84 | 9.6 | 7.17 | 9.6 | 6.31 | 9.6 | 5.45 | 9.6 | 4.65 | 5.6 | 3.74 | 5.6 | 3.64 |
| Min | -25 | - | - | 4.2 | 1.92 | 4.1 | 1.72 | 4.0 | 1.52 | 4.0 | 1.45 | - | - | - | - |
| | -20 | - | - | 5.1 | 2.42 | 5.0 | 2.17 | 4.9 | 1.87 | 4.7 | 1.57 | - | - | - | - |
| | -15 | - | - | 5.8 | 2.73 | 5.7 | 2.42 | 5.6 | 2.07 | 5.5 | 1.87 | 5.4 | 1.62 | - | - |
| | -10 | 4.0 | 3.64 | 3.8 | 2.93 | 3.7 | 2.63 | 3.6 | 2.27 | 3.5 | 1.97 | 3.3 | 1.67 | 3.2 | 1.62 |
| | -7 | 4.2 | 3.79 | 3.9 | 3.03 | 3.8 | 2.68 | 3.7 | 2.32 | 3.5 | 2.07 | 3.2 | 1.77 | 3.1 | 1.67 |
| | 2 | 3.9 | 4.75 | 3.5 | 3.69 | 3.4 | 3.28 | 3.2 | 2.83 | 3.0 | 2.37 | 2.7 | 1.92 | 2.6 | 1.92 |
| | 7 | 3.9 | 5.86 | 3.5 | 4.24 | 3.4 | 3.79 | 3.2 | 3.33 | 3.0 | 2.93 | 2.7 | 2.47 | 2.6 | 2.27 |
| | 12 | 4.2 | 7.17 | 3.9 | 5.15 | 3.7 | 4.65 | 3.5 | 4.14 | 3.3 | 3.54 | 3.0 | 2.88 | 2.9 | 2.68 |
| | 15 | 4.4 | 7.47 | 4.3 | 6.06 | 4.2 | 5.30 | 4.1 | 4.49 | 3.9 | 3.94 | 3.6 | 3.33 | 3.5 | 2.88 |
| | 20 | 5.2 | 8.08 | 4.8 | 6.92 | 4.6 | 6.06 | 4.4 | 5.15 | 4.2 | 4.44 | 4.0 | 3.69 | 3.9 | 3.54 |

## ■ PUZ-SHWM60VAA

| Water outlet temperature [°C] | | 25 | | 35 | | 40 | | 45 | | 50 | | 55 | | 60 | |
|---|---|---|---|---|---|---|---|---|---|---|---|---|---|---|---|
| Ambient temperature [°C] | | Capacity | COP | Capacity | COP | Capacity | COP | Capacity | COP | Capacity | COP | Capacity | COP | Capacity | COP |
| Max | -25 | - | - | 4.7 | 1.72 | 4.1 | 1.57 | 4.0 | 1.43 | 4.1 | 1.52 | - | - | - | - |
| | -20 | - | - | 6.0 | 2.27 | 5.3 | 2.02 | 4.9 | 1.77 | 4.5 | 1.57 | - | - | - | - |
| | -15 | - | - | 7.3 | 2.63 | 6.5 | 2.37 | 6.0 | 2.07 | 5.6 | 1.92 | 4.8 | 1.72 | - | - |
| | -10 | 8.7 | 3.54 | 8.0 | 3.08 | 6.9 | 2.73 | 6.7 | 2.37 | 6.0 | 2.12 | 5.4 | 1.92 | 5.0 | 1.65 |
| | -7 | 9.0 | 3.64 | 8.3 | 3.13 | 7.2 | 2.83 | 7.0 | 2.47 | 6.2 | 2.17 | 5.5 | 1.97 | 4.8 | 1.72 |
| | 2 | 7.5 | 4.44 | 7.0 | 3.64 | 6.8 | 3.28 | 6.5 | 2.93 | 6.2 | 2.47 | 5.6 | 1.93 | 4.9 | 1.77 |
| | 7 | 9.0 | 5.56 | 8.3 | 4.75 | 8.0 | 4.19 | 7.6 | 3.59 | 7.2 | 3.18 | 6.9 | 2.68 | 6.2 | 2.37 |
| | 12 | 9.6 | 6.62 | 9.2 | 5.56 | 9.1 | 4.90 | 8.9 | 4.19 | 8.4 | 3.69 | 7.9 | 3.18 | 7.0 | 2.78 |
| | 15 | 9.9 | 7.12 | 9.6 | 5.96 | 9.5 | 5.25 | 9.3 | 4.55 | 8.8 | 3.94 | 8.3 | 3.48 | 7.3 | 3.03 |
| | 20 | 10.2 | 8.18 | 10.0 | 6.87 | 9.9 | 6.06 | 9.7 | 5.25 | 9.5 | 4.60 | 9.2 | 3.79 | 8.4 | 3.48 |
| Nominal | -25 | - | - | 4.7 | 1.72 | 4.3 | 1.57 | 4.0 | 1.43 | 4.1 | 1.52 | - | - | - | - |
| | -20 | - | - | 6.0 | 2.27 | 5.5 | 2.02 | 4.9 | 1.77 | 4.5 | 1.57 | - | - | - | - |
| | -15 | - | - | 6.0 | 2.69 | 6.0 | 2.37 | 6.0 | 2.07 | 5.6 | 1.92 | 4.8 | 1.72 | - | - |
| | -10 | 6.0 | 3.79 | 6.0 | 3.24 | 6.0 | 2.88 | 6.0 | 2.53 | 6.0 | 2.12 | 5.4 | 1.92 | 5.0 | 1.65 |
| | -7 | 6.0 | 3.89 | 6.0 | 3.18 | 6.0 | 2.88 | 6.0 | 2.53 | 6.0 | 2.22 | 5.5 | 1.97 | 4.8 | 1.72 |
| | 2 | 6.0 | 4.65 | 6.0 | 3.80 | 6.0 | 3.43 | 6.0 | 2.98 | 6.0 | 2.53 | 5.6 | 1.93 | 4.9 | 1.77 |
| | 7 | 5.0 | 5.50 | 5.0 | 5.05 | 5.0 | 4.29 | 5.0 | 3.64 | 5.0 | 3.18 | 4.0 | 2.45 | 4.0 | 2.30 |
| | 12 | 5.0 | 6.21 | 5.0 | 5.20 | 5.0 | 4.75 | 5.0 | 4.24 | 5.0 | 3.64 | 4.0 | 3.13 | 4.0 | 2.78 |
| | 15 | 5.0 | 7.02 | 5.0 | 5.86 | 5.0 | 5.15 | 5.0 | 4.44 | 5.0 | 3.89 | 4.0 | 3.48 | 4.0 | 2.98 |
| | 20 | 5.0 | 7.83 | 5.0 | 6.82 | 5.0 | 5.96 | 5.0 | 5.10 | 5.0 | 4.44 | 4.0 | 3.79 | 4.0 | 3.43 |
| Mid | -25 | - | - | 3.8 | 1.67 | 3.6 | 1.52 | 3.4 | 1.36 | 3.3 | 1.46 | - | - | - | - |
| | -20 | - | - | 4.8 | 2.37 | 4.7 | 2.12 | 4.6 | 1.82 | 4.3 | 1.52 | - | - | - | - |
| | -15 | - | - | 4.9 | 2.58 | 4.9 | 2.32 | 4.8 | 2.02 | 4.8 | 1.82 | 4.6 | 1.62 | - | - |
| | -10 | 4.8 | 3.79 | 4.8 | 3.13 | 4.8 | 2.78 | 4.8 | 2.42 | 4.8 | 2.07 | 4.8 | 1.82 | 4.0 | 1.65 |
| | -7 | 4.8 | 3.79 | 4.8 | 3.23 | 4.8 | 2.83 | 4.8 | 2.42 | 4.8 | 2.17 | 4.8 | 1.92 | 4.6 | 1.72 |
| | 2 | 4.8 | 4.70 | 4.8 | 3.84 | 4.8 | 3.43 | 4.8 | 2.98 | 4.8 | 2.53 | 4.8 | 2.17 | 4.8 | 1.87 |
| | 7 | 4.0 | 5.30 | 4.0 | 4.39 | 4.0 | 3.99 | 4.0 | 3.54 | 4.0 | 3.03 | 3.2 | 2.40 | 3.2 | 2.25 |
| | 12 | 4.0 | 5.81 | 4.0 | 4.90 | 4.0 | 4.55 | 4.0 | 4.14 | 4.0 | 3.54 | 3.2 | 3.08 | 3.2 | 2.73 |
| | 15 | 4.0 | 6.87 | 4.0 | 5.76 | 4.0 | 5.05 | 4.0 | 4.34 | 4.0 | 3.79 | 3.2 | 3.38 | 3.2 | 2.93 |
| | 20 | 4.2 | 7.52 | 4.0 | 6.67 | 4.0 | 5.81 | 4.0 | 4.95 | 4.0 | 4.24 | 3.2 | 3.69 | 3.2 | 3.38 |
| Min | -25 | - | - | 3.6 | 1.60 | 3.5 | 1.50 | 3.4 | 1.35 | 3.0 | 1.35 | - | - | - | - |
| | -20 | - | - | 4.3 | 2.35 | 4.2 | 2.10 | 4.1 | 1.80 | 3.9 | 1.50 | - | - | - | - |
| | -15 | - | - | 4.9 | 2.55 | 4.8 | 2.30 | 4.7 | 2.00 | 4.6 | 1.75 | 4.5 | 1.55 | - | - |
| | -10 | 3.8 | 3.60 | 3.5 | 2.85 | 3.4 | 2.55 | 3.3 | 2.20 | 3.2 | 1.90 | 3.1 | 1.60 | 3.0 | 1.60 |
| | -7 | 3.8 | 3.70 | 3.5 | 2.90 | 3.4 | 2.60 | 3.2 | 2.25 | 3.1 | 2.00 | 2.9 | 1.70 | 2.8 | 1.67 |
| | 2 | 3.4 | 4.60 | 3.1 | 3.60 | 2.9 | 3.20 | 2.6 | 2.75 | 2.4 | 2.05 | 2.1 | 1.80 | 2.0 | 1.92 |
| | 7 | 2.7 | 4.80 | 2.4 | 3.50 | 2.3 | 3.30 | 2.2 | 3.05 | 2.0 | 2.50 | 1.7 | 2.30 | 1.6 | 2.27 |
| | 12 | 3.3 | 5.35 | 3.0 | 4.45 | 2.8 | 4.20 | 2.6 | 3.90 | 2.2 | 3.20 | 1.8 | 2.60 | 1.8 | 2.58 |
| | 15 | 3.8 | 6.75 | 3.2 | 5.60 | 3.0 | 4.85 | 2.8 | 4.10 | 2.4 | 3.45 | 1.9 | 2.90 | 1.9 | 2.78 |
| | 20 | 4.2 | 7.45 | 3.7 | 6.55 | 3.4 | 5.65 | 3.1 | 4.75 | 2.9 | 3.90 | 2.6 | 3.30 | 2.5 | 3.38 |

## ■ PUZ-SHWM80VAA PUZ-SHWM80YAA

| Water outlet temperature[°C] | | 25 | | 35 | | 40 | | 45 | | 50 | | 55 | | 60 | |
|---|---|---|---|---|---|---|---|---|---|---|---|---|---|---|---|
| Ambient temperature[°C] | | Capacity | COP | Capacity | COP | Capacity | COP | Capacity | COP | Capacity | COP | Capacity | COP | Capacity | COP |
| Max | -25 | - | - | 5.6 | 1.77 | 5.5 | 1.62 | 5.3 | 1.42 | 4.4 | 1.38 | - | - | - | - |
| | -20 | - | - | 7.6 | 2.22 | 7.5 | 1.97 | 7.3 | 1.72 | 6.3 | 1.46 | - | - | - | - |
| | -15 | - | - | 8.8 | 2.53 | 8.5 | 2.27 | 8.2 | 1.97 | 7.1 | 1.87 | 6.0 | 1.62 | - | - |
| | -10 | 10.3 | 3.33 | 9.7 | 2.93 | 9.4 | 2.68 | 9.1 | 2.42 | 7.8 | 2.12 | 7.6 | 1.97 | 6.0 | 1.50 |
| | -7 | 10.6 | 3.33 | 10.0 | 3.00 | 9.7 | 2.68 | 9.4 | 2.37 | 8.2 | 2.17 | 7.9 | 1.97 | 6.2 | 1.57 |
| | 2 | 10.1 | 3.94 | 9.5 | 3.33 | 9.3 | 2.98 | 9.0 | 2.63 | 8.7 | 2.42 | 7.6 | 1.82 | 6.6 | 1.67 |
| | 7 | 9.6 | 5.45 | 8.9 | 4.65 | 8.6 | 4.09 | 8.2 | 3.48 | 7.9 | 3.13 | 7.5 | 2.58 | 6.8 | 2.32 |
| | 12 | 10.4 | 6.41 | 9.9 | 5.50 | 9.7 | 4.85 | 9.5 | 4.14 | 9.1 | 3.64 | 8.6 | 3.13 | 7.7 | 2.73 |
| | 15 | 10.7 | 7.02 | 10.4 | 5.91 | 10.2 | 5.25 | 10.0 | 4.55 | 9.5 | 3.89 | 9.0 | 3.48 | 8.0 | 2.98 |
| | 20 | 10.9 | 7.98 | 10.8 | 6.77 | 10.6 | 6.01 | 10.4 | 5.20 | 10.2 | 4.49 | 9.7 | 3.74 | 9.1 | 3.48 |
| Nominal | -25 | - | - | 5.6 | 1.77 | 5.5 | 1.62 | 5.3 | 1.42 | 4.4 | 1.38 | - | - | - | - |
| | -20 | - | - | 7.6 | 2.22 | 7.5 | 1.97 | 7.3 | 1.72 | 6.3 | 1.46 | - | - | - | - |
| | -15 | - | - | 8.0 | 2.69 | 8.0 | 2.37 | 8.0 | 2.02 | 7.1 | 1.87 | 6.0 | 1.62 | - | - |
| | -10 | 8.0 | 3.59 | 8.0 | 3.12 | 8.0 | 2.83 | 8.0 | 2.53 | 7.8 | 2.12 | 7.6 | 1.97 | 6.0 | 1.50 |
| | -7 | 8.0 | 3.79 | 8.0 | 3.15 | 8.0 | 2.83 | 8.0 | 2.47 | 8.0 | 2.27 | 7.9 | 1.97 | 6.2 | 1.57 |
| | 2 | 8.0 | 4.49 | 8.0 | 3.75 | 8.0 | 3.33 | 8.0 | 2.88 | 8.0 | 2.53 | 7.6 | 1.82 | 6.6 | 1.67 |
| | 7 | 6.0 | 5.71 | 6.0 | 5.05 | 6.0 | 4.39 | 6.0 | 3.69 | 6.0 | 3.23 | 4.0 | 2.45 | 4.0 | 2.30 |
| | 12 | 6.0 | 6.51 | 6.0 | 5.40 | 6.0 | 4.85 | 6.0 | 4.29 | 6.0 | 3.69 | 4.0 | 3.13 | 4.0 | 2.78 |
| | 15 | 6.0 | 7.12 | 6.0 | 6.01 | 6.0 | 5.30 | 6.0 | 4.60 | 6.0 | 3.99 | 4.0 | 3.48 | 4.0 | 2.98 |
| | 20 | 6.0 | 8.13 | 6.0 | 6.97 | 6.0 | 6.11 | 6.0 | 5.20 | 6.0 | 4.60 | 4.0 | 3.79 | 4.0 | 3.43 |
| Mid | -25 | - | - | 4.5 | 1.72 | 4.4 | 1.57 | 4.2 | 1.41 | 3.5 | 1.40 | - | - | - | - |
| | -20 | - | - | 6.1 | 2.37 | 6.0 | 2.07 | 5.8 | 1.77 | 5.6 | 1.52 | - | - | - | - |
| | -15 | - | - | 6.4 | 2.73 | 6.4 | 2.42 | 6.4 | 2.07 | 6.3 | 1.92 | 5.9 | 1.67 | - | - |
| | -10 | 6.4 | 3.79 | 6.4 | 3.13 | 6.4 | 2.83 | 6.4 | 2.53 | 6.4 | 2.17 | 6.4 | 1.82 | 4.8 | 1.60 |
| | -7 | 6.4 | 3.89 | 6.4 | 3.18 | 6.4 | 2.88 | 6.4 | 2.53 | 6.4 | 2.27 | 6.4 | 2.02 | 4.9 | 1.67 |
| | 2 | 6.4 | 4.65 | 6.4 | 3.84 | 6.4 | 3.43 | 6.4 | 2.98 | 6.4 | 2.58 | 6.4 | 2.17 | 5.3 | 1.87 |
| | 7 | 4.8 | 5.45 | 4.8 | 4.70 | 4.8 | 4.19 | 4.8 | 3.64 | 4.8 | 3.13 | 3.2 | 2.40 | 3.2 | 2.25 |
| | 12 | 4.8 | 6.16 | 4.8 | 5.15 | 4.8 | 4.70 | 4.8 | 4.24 | 4.8 | 3.64 | 3.2 | 3.08 | 3.2 | 2.73 |
| | 15 | 4.8 | 7.02 | 4.8 | 5.91 | 4.8 | 5.20 | 4.8 | 4.49 | 4.8 | 3.89 | 3.2 | 3.38 | 3.2 | 2.93 |
| | 20 | 4.8 | 7.78 | 4.8 | 6.82 | 4.8 | 5.96 | 4.8 | 5.05 | 4.8 | 4.39 | 3.2 | 3.69 | 3.2 | 3.38 |
| Min | -25 | - | - | 3.6 | 1.60 | 3.5 | 1.50 | 3.4 | 1.35 | 3.0 | 1.35 | - | - | - | - |
| | -20 | - | - | 4.3 | 2.35 | 4.2 | 2.10 | 4.1 | 1.80 | 3.9 | 1.50 | - | - | - | - |
| | -15 | - | - | 4.9 | 2.55 | 4.8 | 2.30 | 4.7 | 2.00 | 4.6 | 1.75 | 4.5 | 1.55 | - | - |
| | -10 | 3.8 | 3.60 | 3.5 | 2.85 | 3.4 | 2.55 | 3.3 | 2.20 | 3.2 | 1.90 | 3.1 | 1.60 | 3.0 | 1.60 |
| | -7 | 3.8 | 3.70 | 3.5 | 2.90 | 3.4 | 2.60 | 3.2 | 2.25 | 3.1 | 2.00 | 2.9 | 1.70 | 2.8 | 1.67 |
| | 2 | 3.4 | 4.60 | 3.1 | 3.60 | 2.9 | 3.20 | 2.6 | 2.75 | 2.4 | 2.05 | 2.1 | 1.80 | 2.0 | 1.92 |
| | 7 | 2.7 | 4.80 | 2.4 | 3.50 | 2.3 | 3.30 | 2.2 | 3.05 | 2.0 | 2.50 | 1.7 | 2.30 | 1.6 | 2.27 |
| | 12 | 3.3 | 5.35 | 3.0 | 4.45 | 2.8 | 4.20 | 2.6 | 3.90 | 2.2 | 3.20 | 1.8 | 2.60 | 1.8 | 2.58 |
| | 15 | 3.8 | 6.75 | 3.2 | 5.60 | 3.0 | 4.85 | 2.8 | 4.10 | 2.4 | 3.45 | 1.9 | 2.90 | 1.9 | 2.78 |
| | 20 | 4.2 | 7.45 | 3.7 | 6.55 | 3.4 | 5.65 | 3.1 | 4.75 | 2.9 | 3.90 | 2.6 | 3.30 | 2.5 | 3.38 |

## ■ PUZ-SHWM100VAA PUZ-SHWM100YAA

| Water outlet temperature [°C] | | 25 | | 35 | | 40 | | 45 | | 50 | | 55 | | 60 | |
|---|---|---|---|---|---|---|---|---|---|---|---|---|---|---|---|
| Ambient temperature [°C] | | Capacity | COP | Capacity | COP | Capacity | COP | Capacity | COP | Capacity | COP | Capacity | COP | Capacity | COP |
| Max | -25 | - | - | 8.0 | 2.02 | 7.9 | 1.82 | 7.7 | 1.59 | 8.0 | 1.45 | - | - | - | - |
| | -20 | - | - | 9.4 | 2.17 | 9.2 | 1.97 | 9.0 | 1.77 | 8.6 | 1.57 | - | - | - | - |
| | -15 | - | - | 10.7 | 2.53 | 10.5 | 2.22 | 10.3 | 1.92 | 10.0 | 1.87 | 9.2 | 1.62 | - | - |
| | -10 | 12.6 | 2.83 | 12.0 | 2.63 | 11.7 | 2.47 | 11.4 | 2.27 | 11.0 | 2.02 | 10.0 | 1.93 | 8.0 | 1.60 |
| | -7 | 13.5 | 2.93 | 13.2 | 2.68 | 12.9 | 2.47 | 12.6 | 2.27 | 12.2 | 2.12 | 10.9 | 1.97 | 9.2 | 1.67 |
| | 2 | 12.8 | 3.48 | 12.4 | 3.18 | 12.2 | 2.93 | 11.9 | 2.63 | 11.4 | 2.32 | 10.4 | 2.02 | 9.4 | 1.87 |
| | 7 | 11.4 | 5.56 | 10.9 | 4.70 | 10.5 | 4.09 | 10.0 | 3.43 | 9.7 | 3.13 | 9.2 | 2.58 | 8.5 | 2.27 |
| | 12 | 12.9 | 6.36 | 12.2 | 5.50 | 12.0 | 4.80 | 11.7 | 4.04 | 11.1 | 3.54 | 10.5 | 2.98 | 9.5 | 2.58 |
| | 15 | 13.4 | 6.77 | 13.0 | 5.71 | 12.7 | 5.15 | 12.4 | 4.55 | 11.8 | 4.14 | 11.1 | 3.59 | 10.0 | 2.93 |
| | 20 | 14.2 | 7.68 | 13.8 | 6.31 | 13.5 | 5.71 | 13.1 | 5.05 | 12.5 | 4.39 | 11.4 | 3.79 | 10.5 | 3.59 |
| Nominal | -25 | - | - | 8.0 | 2.02 | 7.9 | 1.82 | 7.7 | 1.59 | 7.0 | 1.50 | - | - | - | - |
| | -20 | - | - | 9.4 | 2.17 | 9.2 | 1.97 | 9.0 | 1.77 | 8.6 | 1.57 | - | - | - | - |
| | -15 | - | - | 10.0 | 2.63 | 10.0 | 2.32 | 10.0 | 1.97 | 10.0 | 1.87 | 9.2 | 1.62 | - | - |
| | -10 | 10.0 | 3.48 | 10.0 | 2.95 | 10.0 | 2.68 | 10.0 | 2.42 | 10.0 | 2.12 | 10.0 | 1.93 | 8.0 | 1.60 |
| | -7 | 10.0 | 3.54 | 10.0 | 3.05 | 10.0 | 2.78 | 10.0 | 2.47 | 10.0 | 2.27 | 10.0 | 2.02 | 9.2 | 1.67 |
| | 2 | 10.0 | 4.14 | 10.0 | 3.50 | 10.0 | 3.13 | 10.0 | 2.78 | 10.0 | 2.47 | 10.0 | 2.07 | 9.4 | 1.87 |
| | 7 | 8.0 | 5.96 | 8.0 | 5.00 | 8.0 | 4.39 | 8.0 | 3.69 | 8.0 | 3.23 | 7.0 | 2.70 | 7.0 | 2.32 |
| | 12 | 8.0 | 7.27 | 8.0 | 5.96 | 8.0 | 5.15 | 8.0 | 4.34 | 8.0 | 3.79 | 7.0 | 3.13 | 7.0 | 2.68 |
| | 15 | 8.0 | 7.63 | 8.0 | 6.26 | 8.0 | 5.56 | 8.0 | 4.85 | 8.0 | 4.29 | 7.0 | 3.69 | 7.0 | 2.98 |
| | 20 | 8.0 | 8.74 | 8.0 | 7.17 | 8.0 | 6.31 | 8.0 | 5.45 | 8.0 | 4.70 | 7.0 | 3.89 | 7.0 | 3.79 |
| Mid | -25 | - | - | 6.4 | 2.07 | 6.3 | 1.87 | 6.2 | 1.62 | 5.6 | 1.55 | - | - | - | - |
| | -20 | - | - | 7.2 | 2.37 | 7.2 | 2.12 | 7.2 | 1.82 | 6.9 | 1.62 | - | - | - | - |
| | -15 | - | - | 8.0 | 2.68 | 8.0 | 2.37 | 8.0 | 2.02 | 8.0 | 1.92 | 7.4 | 1.72 | - | - |
| | -10 | 8.0 | 3.74 | 8.0 | 3.13 | 8.0 | 2.83 | 8.0 | 2.53 | 8.0 | 2.22 | 8.0 | 1.87 | 6.4 | 1.70 |
| | -7 | 8.0 | 3.74 | 8.0 | 3.18 | 8.0 | 2.88 | 8.0 | 2.53 | 8.0 | 2.32 | 8.0 | 2.07 | 7.4 | 1.77 |
| | 2 | 8.0 | 4.49 | 8.0 | 3.64 | 8.0 | 3.28 | 8.0 | 2.88 | 8.0 | 2.58 | 8.0 | 2.17 | 7.5 | 1.97 |
| | 7 | 6.4 | 5.86 | 6.4 | 5.05 | 6.4 | 4.39 | 6.4 | 3.74 | 6.4 | 3.28 | 5.6 | 2.78 | 5.6 | 2.37 |
| | 12 | 6.4 | 7.37 | 6.4 | 5.71 | 6.4 | 5.05 | 6.4 | 4.34 | 6.4 | 3.79 | 5.6 | 3.13 | 5.6 | 2.73 |
| | 15 | 6.4 | 7.63 | 6.4 | 6.21 | 6.4 | 5.50 | 6.4 | 4.75 | 6.4 | 4.19 | 5.6 | 3.64 | 5.6 | 2.98 |
| | 20 | 6.4 | 8.43 | 6.4 | 7.12 | 6.4 | 6.26 | 6.4 | 5.35 | 6.4 | 4.65 | 5.6 | 3.84 | 5.6 | 3.74 |
| Min | -25 | - | - | 3.6 | 1.60 | 3.5 | 1.50 | 3.4 | 1.35 | 3.0 | 1.35 | - | - | - | - |
| | -20 | - | - | 4.3 | 2.35 | 4.2 | 2.10 | 4.1 | 1.80 | 3.9 | 1.50 | - | - | - | - |
| | -15 | - | - | 4.9 | 2.55 | 4.8 | 2.30 | 4.7 | 2.00 | 4.6 | 1.75 | 4.5 | 1.55 | - | - |
| | -10 | 3.8 | 3.60 | 3.5 | 2.85 | 3.4 | 2.55 | 3.3 | 2.20 | 3.2 | 1.90 | 3.1 | 1.60 | 3.0 | 1.60 |
| | -7 | 3.8 | 3.70 | 3.5 | 2.90 | 3.4 | 2.60 | 3.2 | 2.25 | 3.1 | 2.00 | 2.9 | 1.70 | 2.8 | 1.67 |
| | 2 | 3.4 | 4.60 | 3.2 | 3.60 | 2.9 | 3.20 | 2.6 | 2.75 | 2.4 | 2.05 | 2.1 | 1.80 | 2.0 | 1.92 |
| | 7 | 2.7 | 4.80 | 2.5 | 3.50 | 2.3 | 3.30 | 2.2 | 3.05 | 2.0 | 2.50 | 1.7 | 2.30 | 1.6 | 2.27 |
| | 12 | 3.3 | 5.35 | 3.0 | 4.45 | 2.8 | 4.20 | 2.6 | 3.90 | 2.2 | 3.20 | 1.8 | 2.60 | 1.8 | 2.58 |
| | 15 | 3.8 | 6.75 | 3.2 | 5.60 | 3.0 | 4.85 | 2.8 | 4.10 | 2.4 | 3.45 | 1.9 | 2.90 | 1.9 | 2.78 |
| | 20 | 4.2 | 7.45 | 3.7 | 6.55 | 3.4 | 5.65 | 3.1 | 4.75 | 2.9 | 3.90 | 2.6 | 3.30 | 2.5 | 3.38 |

## ■ PUZ-SHWM120VAA PUZ-SHWM120YAA

| Water outlet temperature[°C] | | 25 | | 35 | | 40 | | 45 | | 50 | | 55 | | 60 | |
|---|---|---|---|---|---|---|---|---|---|---|---|---|---|---|---|
| Ambient temperature[°C] | | Capacity | COP | Capacity | COP | Capacity | COP | Capacity | COP | Capacity | COP | Capacity | COP | Capacity | COP |
| Max | -25 | - | - | 9.6 | 1.97 | 9.4 | 1.77 | 9.2 | 1.58 | 9.0 | 1.50 | - | - | - | - |
| | -20 | - | - | 11.0 | 2.02 | 10.9 | 1.92 | 10.8 | 1.77 | 9.6 | 1.57 | - | - | - | - |
| | -15 | - | - | 12.3 | 2.37 | 12.2 | 2.12 | 12.1 | 1.87 | 11.6 | 1.82 | 11.2 | 1.78 | - | - |
| | -10 | 14.0 | 2.42 | 13.6 | 2.37 | 13.2 | 2.22 | 12.8 | 2.02 | 12.4 | 1.92 | 12.0 | 1.89 | 10.0 | 1.55 |
| | -7 | 15.2 | 2.63 | 14.9 | 2.42 | 14.5 | 2.27 | 14.1 | 2.12 | 13.3 | 2.02 | 12.4 | 1.87 | 10.0 | 1.62 |
| | 2 | 13.5 | 3.33 | 13.2 | 3.13 | 12.9 | 2.88 | 12.6 | 2.58 | 12.3 | 2.27 | 12.0 | 2.05 | 11.0 | 1.82 |
| | 7 | 13.2 | 4.95 | 12.9 | 4.14 | 12.5 | 3.64 | 12.1 | 3.13 | 11.7 | 2.88 | 11.2 | 2.58 | 10.5 | 2.22 |
| | 12 | 15.0 | 5.45 | 14.5 | 4.60 | 14.2 | 4.14 | 13.8 | 3.64 | 13.2 | 3.13 | 12.6 | 2.68 | 11.7 | 2.32 |
| | 15 | 15.9 | 5.96 | 15.4 | 5.05 | 15.1 | 4.65 | 14.7 | 4.19 | 14.0 | 3.79 | 13.3 | 3.33 | 12.4 | 2.68 |
| | 20 | 16.9 | 6.16 | 16.4 | 5.35 | 16.2 | 4.90 | 15.9 | 4.44 | 15.2 | 3.94 | 14.5 | 3.43 | 13.5 | 3.03 |
| Nominal | -25 | - | - | 9.6 | 1.97 | 9.4 | 1.77 | 9.2 | 1.58 | 9.0 | 1.50 | - | - | - | - |
| | -20 | - | - | 11.0 | 2.02 | 10.9 | 1.92 | 10.8 | 1.77 | 9.6 | 1.57 | - | - | - | - |
| | -15 | - | - | 12.0 | 2.42 | 12.0 | 2.17 | 12.0 | 1.87 | 11.6 | 1.82 | 11.2 | 1.78 | - | - |
| | -10 | 12.0 | 3.23 | 12.0 | 2.80 | 12.0 | 2.53 | 12.0 | 2.22 | 12.0 | 1.97 | 12.0 | 1.89 | 10.0 | 1.55 |
| | -7 | 12.0 | 3.33 | 12.0 | 2.87 | 12.0 | 2.63 | 12.0 | 2.37 | 12.0 | 2.17 | 12.0 | 1.92 | 10.0 | 1.62 |
| | 2 | 12.0 | 3.59 | 12.0 | 3.30 | 12.0 | 2.98 | 12.0 | 2.63 | 12.0 | 2.32 | 12.0 | 2.05 | 11.0 | 1.82 |
| | 7 | 10.0 | 5.81 | 10.0 | 4.85 | 10.0 | 4.19 | 10.0 | 3.43 | 10.0 | 3.08 | 7.0 | 2.70 | 7.0 | 2.27 |
| | 12 | 10.0 | 7.22 | 10.0 | 5.86 | 10.0 | 5.05 | 10.0 | 4.24 | 10.0 | 3.69 | 7.0 | 3.54 | 7.0 | 3.12 |
| | 15 | 10.0 | 7.52 | 10.0 | 6.21 | 10.0 | 5.50 | 10.0 | 4.80 | 10.0 | 4.24 | 7.0 | 3.85 | 7.0 | 3.22 |
| | 20 | 10.0 | 8.74 | 10.0 | 7.07 | 10.0 | 6.26 | 10.0 | 5.40 | 10.0 | 4.65 | 7.0 | 3.95 | 7.0 | 3.54 |
| Mid | -25 | - | - | 7.7 | 2.07 | 7.6 | 1.87 | 7.4 | 1.62 | 7.2 | 1.55 | - | - | - | - |
| | -20 | - | - | 8.8 | 2.27 | 8.7 | 2.07 | 8.6 | 1.82 | 7.8 | 1.62 | - | - | - | - |
| | -15 | - | - | 9.6 | 2.58 | 9.6 | 2.27 | 9.6 | 1.97 | 9.3 | 1.92 | 9.0 | 1.82 | - | - |
| | -10 | 9.6 | 3.54 | 9.6 | 3.03 | 9.6 | 2.73 | 9.6 | 2.42 | 9.6 | 2.17 | 9.6 | 1.92 | 8.0 | 1.65 |
| | -7 | 9.6 | 3.64 | 9.6 | 3.13 | 9.6 | 2.83 | 9.6 | 2.47 | 9.6 | 2.27 | 9.6 | 2.07 | 8.0 | 1.72 |
| | 2 | 9.6 | 4.29 | 9.6 | 3.54 | 9.6 | 3.18 | 9.6 | 2.83 | 9.6 | 2.53 | 9.6 | 2.17 | 8.6 | 1.92 |
| | 7 | 8.0 | 5.96 | 8.0 | 5.05 | 8.0 | 4.39 | 8.0 | 3.69 | 8.0 | 3.23 | 5.6 | 3.09 | 5.6 | 2.52 |
| | 12 | 8.0 | 7.27 | 8.0 | 5.96 | 8.0 | 5.15 | 8.0 | 4.34 | 8.0 | 3.79 | 5.6 | 3.89 | 5.6 | 3.43 |
| | 15 | 8.0 | 7.63 | 8.0 | 6.26 | 8.0 | 5.56 | 8.0 | 4.85 | 8.0 | 4.29 | 5.6 | 4.23 | 5.6 | 3.55 |
| | 20 | 8.0 | 8.79 | 8.0 | 7.17 | 8.0 | 6.31 | 8.0 | 5.45 | 8.0 | 4.70 | 5.6 | 4.35 | 5.6 | 3.89 |
| Min | -25 | - | - | 4.0 | 1.94 | 3.9 | 1.73 | 3.8 | 1.53 | 3.2 | 1.46 | - | - | - | - |
| | -20 | - | - | 4.9 | 2.45 | 4.8 | 2.19 | 4.7 | 1.89 | 4.5 | 1.58 | - | - | - | - |
| | -15 | - | - | 5.6 | 2.75 | 5.5 | 2.45 | 5.4 | 2.09 | 5.3 | 1.89 | 5.2 | 1.58 | - | - |
| | -10 | 3.8 | 3.67 | 3.6 | 2.96 | 3.5 | 2.65 | 3.4 | 2.30 | 3.3 | 1.94 | 3.1 | 1.63 | 3.0 | 1.62 |
| | -7 | 3.8 | 3.77 | 3.5 | 2.96 | 3.4 | 2.65 | 3.2 | 2.30 | 3.1 | 2.04 | 2.9 | 1.73 | 2.8 | 1.68 |
| | 2 | 3.5 | 4.79 | 3.2 | 3.67 | 3.0 | 3.26 | 2.7 | 2.81 | 2.4 | 2.35 | 2.1 | 1.84 | 2.0 | 1.94 |
| | 7 | 2.7 | 5.00 | 2.5 | 3.62 | 2.4 | 3.42 | 2.3 | 3.16 | 2.0 | 2.75 | 1.7 | 2.35 | 1.6 | 2.30 |
| | 12 | 3.4 | 7.04 | 3.1 | 4.64 | 2.9 | 4.34 | 2.7 | 4.03 | 2.3 | 3.42 | 1.9 | 2.75 | 1.8 | 2.60 |
| | 15 | 4.0 | 7.45 | 3.3 | 5.81 | 3.1 | 5.05 | 2.9 | 4.28 | 2.5 | 3.67 | 2.0 | 3.06 | 1.9 | 2.81 |
| | 20 | 4.3 | 7.75 | 3.8 | 6.78 | 3.5 | 5.87 | 3.2 | 4.95 | 2.9 | 4.18 | 2.6 | 3.37 | 2.5 | 3.42 |

## ■ PUZ-SHWM140VAA PUZ-SHWM140YAA

| Water outlet temperature [°C] | | 25 | | 35 | | 40 | | 45 | | 50 | | 55 | | 60 | |
|---|---|---|---|---|---|---|---|---|---|---|---|---|---|---|---|
| Ambient temperature [°C] | | Capacity | COP | Capacity | COP | Capacity | COP | Capacity | COP | Capacity | COP | Capacity | COP | Capacity | COP |
| Max | -25 | - | - | 9.8 | 1.92 | 9.7 | 1.77 | 9.6 | 1.57 | 10.0 | 1.41 | - | - | - | - |
| | -20 | - | - | 11.8 | 2.02 | 11.7 | 1.87 | 11.5 | 1.72 | 11.0 | 1.52 | - | - | - | - |
| | -15 | - | - | 14.2 | 2.12 | 14.1 | 2.07 | 14.0 | 1.97 | 12.9 | 1.77 | 11.7 | 1.72 | - | - |
| | -10 | 15.5 | 2.12 | 14.9 | 2.22 | 14.8 | 2.12 | 14.6 | 1.97 | 14.5 | 1.92 | 14.3 | 1.82 | 11.0 | 1.46 |
| | -7 | 16.2 | 2.22 | 15.8 | 2.22 | 15.6 | 2.17 | 15.4 | 2.07 | 15.3 | 1.97 | 15.2 | 1.87 | 11.0 | 1.52 |
| | 2 | 15.6 | 2.93 | 14.6 | 2.93 | 14.5 | 2.63 | 14.3 | 2.32 | 14.2 | 2.12 | 14.0 | 1.97 | 12.0 | 1.67 |
| | 7 | 15.4 | 4.14 | 14.4 | 3.54 | 14.2 | 3.28 | 13.9 | 2.98 | 13.3 | 2.63 | 12.6 | 2.42 | 11.0 | 2.12 |
| | 12 | 16.3 | 5.05 | 15.4 | 4.24 | 15.1 | 3.79 | 14.8 | 3.28 | 14.2 | 2.88 | 13.6 | 2.47 | 12.4 | 2.22 |
| | 15 | 16.7 | 5.56 | 15.8 | 4.90 | 15.5 | 4.49 | 15.2 | 4.04 | 14.6 | 3.54 | 14.0 | 3.03 | 12.8 | 2.63 |
| | 20 | 17.9 | 5.35 | 17.0 | 5.05 | 16.7 | 4.65 | 16.4 | 4.24 | 15.7 | 3.84 | 15.0 | 3.38 | 13.8 | 2.93 |
| Nominal | -25 | - | - | 9.8 | 1.92 | 9.7 | 1.77 | 9.6 | 1.57 | 10.0 | 1.41 | - | - | - | - |
| | -20 | - | - | 11.8 | 2.02 | 11.7 | 1.87 | 11.5 | 1.72 | 11.3 | 1.46 | - | - | - | - |
| | -15 | - | - | 14.0 | 2.17 | 14.0 | 2.07 | 14.0 | 1.97 | 12.9 | 1.77 | 11.7 | 1.72 | - | - |
| | -10 | 14.0 | 2.63 | 14.0 | 2.67 | 14.0 | 2.37 | 14.0 | 2.02 | 14.0 | 1.87 | 14.0 | 1.82 | 11.0 | 1.46 |
| | -7 | 14.0 | 2.98 | 14.0 | 2.73 | 14.0 | 2.47 | 14.0 | 2.22 | 14.0 | 1.97 | 14.0 | 1.89 | 11.0 | 1.52 |
| | 2 | 14.0 | 3.57 | 14.0 | 3.24 | 14.0 | 2.73 | 14.0 | 2.37 | 14.0 | 2.17 | 14.0 | 1.97 | 12.0 | 1.67 |
| | 7 | 12.0 | 5.56 | 12.0 | 4.80 | 12.0 | 3.99 | 12.0 | 3.23 | 12.0 | 2.83 | 7.0 | 2.70 | 7.0 | 2.20 |
| | 12 | 12.0 | 6.67 | 12.0 | 5.61 | 12.0 | 4.85 | 12.0 | 4.04 | 12.0 | 3.43 | 7.0 | 3.40 | 7.0 | 3.00 |
| | 15 | 12.0 | 7.27 | 12.0 | 5.96 | 12.0 | 5.30 | 12.0 | 4.65 | 12.0 | 4.09 | 7.0 | 3.70 | 7.0 | 3.10 |
| | 20 | 12.0 | 8.48 | 12.0 | 6.77 | 12.0 | 6.01 | 12.0 | 5.25 | 12.0 | 4.49 | 7.0 | 3.80 | 7.0 | 3.40 |
| Mid | -25 | - | - | 7.8 | 2.07 | 7.8 | 1.87 | 7.7 | 1.62 | 7.5 | 1.50 | - | - | - | - |
| | -20 | - | - | 9.4 | 2.22 | 9.3 | 2.02 | 9.2 | 1.82 | 9.0 | 1.62 | - | - | - | - |
| | -15 | - | - | 11.2 | 2.47 | 11.2 | 2.22 | 11.2 | 1.92 | 10.3 | 1.92 | 9.4 | 1.82 | - | - |
| | -10 | 11.2 | 3.38 | 11.2 | 2.93 | 11.2 | 2.63 | 11.2 | 2.32 | 11.2 | 2.07 | 11.2 | 1.92 | 8.8 | 1.62 |
| | -7 | 11.2 | 3.48 | 11.2 | 3.08 | 11.2 | 2.78 | 11.2 | 2.42 | 11.2 | 2.22 | 11.2 | 2.02 | 8.8 | 1.67 |
| | 2 | 11.2 | 3.94 | 11.2 | 3.43 | 11.2 | 3.08 | 11.2 | 2.73 | 11.2 | 2.42 | 11.2 | 2.12 | 9.6 | 1.87 |
| | 7 | 9.6 | 6.06 | 9.6 | 5.00 | 9.6 | 4.29 | 9.6 | 3.59 | 9.6 | 3.13 | 5.6 | 2.97 | 5.6 | 2.42 |
| | 12 | 9.6 | 7.17 | 9.6 | 6.01 | 9.6 | 5.20 | 9.6 | 4.34 | 9.6 | 3.69 | 5.6 | 3.74 | 5.6 | 3.30 |
| | 15 | 9.6 | 7.58 | 9.6 | 6.26 | 9.6 | 5.56 | 9.6 | 4.85 | 9.6 | 4.29 | 5.6 | 4.07 | 5.6 | 3.41 |
| | 20 | 9.6 | 8.84 | 9.6 | 7.17 | 9.6 | 6.31 | 9.6 | 5.45 | 9.6 | 4.65 | 5.6 | 4.18 | 5.6 | 3.74 |
| Min | -25 | - | - | 4.2 | 1.92 | 4.1 | 1.72 | 4.0 | 1.52 | 4.0 | 1.45 | - | - | - | - |
| | -20 | - | - | 5.1 | 2.42 | 5.0 | 2.17 | 4.9 | 1.87 | 4.7 | 1.57 | - | - | - | - |
| | -15 | - | - | 5.8 | 2.73 | 5.7 | 2.42 | 5.6 | 2.07 | 5.5 | 1.87 | 5.4 | 1.62 | - | - |
| | -10 | 4.0 | 3.64 | 3.8 | 2.93 | 3.7 | 2.63 | 3.6 | 2.27 | 3.5 | 1.97 | 3.3 | 1.67 | 3.2 | 1.62 |
| | -7 | 4.2 | 3.79 | 3.9 | 3.03 | 3.8 | 2.68 | 3.7 | 2.32 | 3.5 | 2.07 | 3.2 | 1.77 | 3.1 | 1.67 |
| | 2 | 3.9 | 4.75 | 3.5 | 3.69 | 3.4 | 3.28 | 3.2 | 2.83 | 3.0 | 2.37 | 2.7 | 1.92 | 2.6 | 1.92 |
| | 7 | 3.9 | 5.86 | 3.5 | 4.24 | 3.4 | 3.79 | 3.2 | 3.33 | 3.0 | 2.93 | 2.7 | 2.47 | 2.6 | 2.27 |
| | 12 | 4.2 | 7.17 | 3.9 | 5.15 | 3.7 | 4.65 | 3.5 | 4.14 | 3.3 | 3.54 | 3.0 | 2.88 | 2.9 | 2.68 |
| | 15 | 4.4 | 7.47 | 4.3 | 6.06 | 4.2 | 5.30 | 4.1 | 4.49 | 3.9 | 3.94 | 3.6 | 3.33 | 3.5 | 2.88 |
| | 20 | 5.2 | 8.08 | 4.8 | 6.92 | 4.6 | 6.06 | 4.4 | 5.15 | 4.2 | 4.44 | 4.0 | 3.69 | 3.9 | 3.54 |

## ■ PUD-SWM60VAA(-BS)

| Water outlet temperature[°C] | | 25 | | 35 | | 40 | | 45 | | 50 | | 55 | | 60 | |
|---|---|---|---|---|---|---|---|---|---|---|---|---|---|---|---|
| Ambient temperature[°C] | | Capacity | COP | Capacity | COP | Capacity | COP | Capacity | COP | Capacity | COP | Capacity | COP | Capacity | COP |
| Max | -25 | - | - | 4.4 | 1.65 | 4.2 | 1.55 | 3.9 | 1.45 | - | - | - | - | - | - |
| | -20 | - | - | 5.2 | 2.35 | 5.1 | 2.10 | 5.0 | 1.80 | 5.0 | 1.50 | - | - | - | - |
| | -15 | - | - | 5.7 | 2.60 | 5.6 | 2.35 | 5.4 | 2.05 | 5.3 | 1.80 | 5.2 | 1.60 | - | - |
| | -10 | 7.5 | 3.65 | 6.8 | 3.05 | 6.7 | 2.70 | 6.5 | 2.35 | 6.0 | 2.05 | 5.4 | 2.00 | - | - |
| | -7 | 8.0 | 3.70 | 7.6 | 3.10 | 7.2 | 2.80 | 6.8 | 2.45 | 6.4 | 2.15 | 6.0 | 2.00 | 5.3 | 1.65 |
| | 2 | 7.5 | 4.40 | 7.0 | 3.50 | 6.8 | 3.20 | 6.5 | 2.85 | 6.2 | 2.40 | 6.0 | 1.78 | 5.5 | 1.75 |
| | 7 | 9.0 | 5.50 | 8.3 | 4.70 | 8.0 | 4.15 | 7.6 | 3.55 | 7.2 | 3.15 | 6.9 | 2.60 | 6.2 | 2.35 |
| | 12 | 9.6 | 6.55 | 9.2 | 5.50 | 9.1 | 4.85 | 8.9 | 4.15 | 8.4 | 3.65 | 7.9 | 3.15 | 7.0 | 2.75 |
| | 15 | 9.9 | 7.05 | 9.6 | 5.90 | 9.5 | 5.20 | 9.3 | 4.50 | 8.8 | 3.90 | 8.3 | 3.45 | 7.3 | 3.00 |
| | 20 | 10.2 | 8.10 | 10.0 | 6.80 | 9.9 | 6.00 | 9.7 | 5.20 | 9.5 | 4.55 | 9.2 | 3.75 | 8.4 | 3.45 |
| Nominal | -25 | - | - | 4.4 | 1.65 | 4.2 | 1.55 | 3.9 | 1.45 | - | - | - | - | - | - |
| | -20 | - | - | 5.2 | 2.35 | 5.1 | 2.10 | 5.0 | 1.80 | 5.0 | 1.50 | - | - | - | - |
| | -15 | - | - | 5.7 | 2.60 | 5.6 | 2.35 | 5.4 | 2.05 | 5.3 | 1.80 | 5.2 | 1.60 | - | - |
| | -10 | 6.0 | 3.75 | 5.7 | 3.13 | 5.6 | 2.75 | 5.5 | 2.35 | 5.5 | 2.05 | 5.4 | 2.00 | - | - |
| | -7 | 6.0 | 3.85 | 6.0 | 3.15 | 6.0 | 2.80 | 6.0 | 2.45 | 6.0 | 2.15 | 6.0 | 2.00 | 5.3 | 1.65 |
| | 2 | 6.0 | 4.60 | 6.0 | 3.60 | 6.0 | 3.25 | 6.0 | 2.85 | 6.0 | 2.40 | 6.0 | 1.78 | 5.5 | 1.75 |
| | 7 | 5.0 | 5.45 | 5.0 | 4.76 | 5.0 | 4.20 | 5.0 | 3.60 | 5.0 | 3.15 | 5.0 | 2.65 | 5.0 | 2.45 |
| | 12 | 5.0 | 6.15 | 5.0 | 5.15 | 5.0 | 4.70 | 5.0 | 4.20 | 5.0 | 3.60 | 5.0 | 3.10 | 5.0 | 2.70 |
| | 15 | 5.0 | 6.95 | 5.0 | 5.80 | 5.0 | 5.10 | 5.0 | 4.40 | 5.0 | 3.85 | 5.0 | 3.35 | 5.0 | 2.95 |
| | 20 | 5.0 | 7.75 | 5.0 | 6.75 | 5.0 | 5.90 | 5.0 | 5.05 | 5.0 | 4.40 | 5.0 | 3.75 | 5.0 | 3.35 |
| Mid | -25 | - | - | 3.6 | 1.60 | 3.5 | 1.50 | 3.4 | 1.35 | - | - | - | - | - | - |
| | -20 | - | - | 4.3 | 2.35 | 4.2 | 2.10 | 4.1 | 1.80 | 4.0 | 1.50 | - | - | - | - |
| | -15 | - | - | 4.9 | 2.55 | 4.8 | 2.30 | 4.7 | 2.00 | 4.6 | 1.75 | 4.5 | 1.55 | - | - |
| | -10 | 4.8 | 3.75 | 4.6 | 3.00 | 4.5 | 2.65 | 4.4 | 2.30 | 4.4 | 2.00 | 4.3 | 1.80 | - | - |
| | -7 | 4.8 | 3.75 | 4.8 | 3.20 | 4.8 | 2.85 | 4.8 | 2.45 | 4.8 | 2.15 | 4.8 | 2.00 | 4.2 | 1.65 |
| | 2 | 4.8 | 4.65 | 4.8 | 3.70 | 4.8 | 3.30 | 4.8 | 2.85 | 4.8 | 2.45 | 4.8 | 2.15 | 4.4 | 1.85 |
| | 7 | 4.0 | 5.25 | 4.0 | 4.35 | 4.0 | 3.95 | 4.0 | 3.50 | 4.0 | 3.00 | 4.0 | 2.70 | 4.0 | 2.40 |
| | 12 | 4.0 | 5.75 | 4.0 | 4.85 | 4.0 | 4.50 | 4.0 | 4.10 | 4.0 | 3.50 | 4.0 | 3.00 | 4.0 | 2.60 |
| | 15 | 4.0 | 6.80 | 4.0 | 5.70 | 4.0 | 5.00 | 4.0 | 4.30 | 4.0 | 3.75 | 4.0 | 3.25 | 4.0 | 2.90 |
| | 20 | 4.2 | 7.45 | 4.0 | 6.60 | 4.0 | 5.75 | 4.0 | 4.90 | 4.0 | 4.20 | 4.0 | 3.65 | 4.0 | 3.30 |
| Min | -25 | - | - | 3.6 | 1.60 | 3.5 | 1.50 | 3.4 | 1.35 | - | - | - | - | - | - |
| | -20 | - | - | 4.3 | 2.35 | 4.2 | 2.10 | 4.1 | 1.80 | 3.9 | 1.50 | - | - | - | - |
| | -15 | - | - | 4.9 | 2.55 | 4.8 | 2.30 | 4.7 | 2.00 | 4.6 | 1.75 | 4.5 | 1.55 | - | - |
| | -10 | 3.8 | 3.60 | 3.5 | 2.85 | 3.4 | 2.55 | 3.3 | 2.20 | 3.2 | 1.90 | 3.1 | 1.60 | - | - |
| | -7 | 3.9 | 3.65 | 3.5 | 2.85 | 3.3 | 2.55 | 3.1 | 2.20 | 3.0 | 1.95 | 2.9 | 1.70 | 3.7 | 1.65 |
| | 2 | 3.4 | 4.60 | 3.1 | 3.60 | 2.9 | 3.20 | 2.6 | 2.75 | 2.4 | 2.05 | 2.1 | 1.80 | 3.2 | 1.80 |
| | 7 | 2.7 | 4.80 | 2.4 | 3.50 | 2.3 | 3.30 | 2.2 | 3.05 | 2.0 | 2.50 | 1.7 | 2.30 | 2.6 | 2.20 |
| | 12 | 3.3 | 5.35 | 3.0 | 4.45 | 2.8 | 4.20 | 2.6 | 3.90 | 2.2 | 3.20 | 1.8 | 2.60 | 2.9 | 2.50 |
| | 15 | 3.8 | 6.75 | 3.2 | 5.60 | 3.0 | 4.85 | 2.8 | 4.10 | 2.4 | 3.45 | 1.9 | 2.90 | 3.1 | 2.80 |
| | 20 | 4.2 | 7.45 | 3.7 | 6.55 | 3.4 | 5.65 | 3.1 | 4.75 | 2.9 | 3.90 | 2.6 | 3.30 | 3.5 | 3.25 |

## ■ PUD-SWM80VAA(-BS) PUD-SWM80YAA(-BS)

| Water outlet temperature[°C] | | 25 | | 35 | | 40 | | 45 | | 50 | | 55 | | 60 | |
|---|---|---|---|---|---|---|---|---|---|---|---|---|---|---|---|
| Ambient temperature[°C] | | Capacity | COP | Capacity | COP | Capacity | COP | Capacity | COP | Capacity | COP | Capacity | COP | Capacity | COP |
| Max | -25 | - | - | 5.0 | 1.70 | 4.9 | 1.55 | 4.7 | 1.44 | - | - | - | - | - | - |
| | -20 | - | - | 6.7 | 2.20 | 6.6 | 1.95 | 6.4 | 1.70 | 6.2 | 1.45 | - | - | - | - |
| | -15 | - | - | 7.3 | 2.50 | 7.0 | 2.25 | 6.6 | 2.00 | 6.7 | 1.75 | 6.8 | 1.55 | - | - |
| | -10 | 8.5 | 3.50 | 7.6 | 2.99 | 7.5 | 2.65 | 7.3 | 2.35 | 7.3 | 2.00 | 7.2 | 1.91 | - | - |
| | -7 | 9.4 | 3.60 | 8.8 | 3.00 | 8.6 | 2.75 | 8.4 | 2.45 | 8.3 | 2.10 | 8.0 | 1.95 | 7.2 | 1.55 |
| | 2 | 9.9 | 3.90 | 9.3 | 3.30 | 9.1 | 3.00 | 8.8 | 2.65 | 8.8 | 2.30 | 8.2 | 1.80 | 8.0 | 1.70 |
| | 7 | 9.6 | 5.40 | 8.9 | 4.60 | 8.6 | 4.05 | 8.2 | 3.45 | 7.9 | 3.10 | 7.5 | 2.55 | 6.8 | 2.30 |
| | 12 | 10.4 | 6.35 | 9.9 | 5.45 | 9.7 | 4.80 | 9.5 | 4.10 | 9.1 | 3.60 | 8.6 | 3.10 | 7.7 | 2.70 |
| | 15 | 10.7 | 6.95 | 10.4 | 5.85 | 10.2 | 5.20 | 10.0 | 4.50 | 9.5 | 3.85 | 9.0 | 3.45 | 8.0 | 2.95 |
| | 20 | 10.9 | 7.90 | 10.8 | 6.70 | 10.6 | 5.95 | 10.4 | 5.15 | 10.2 | 4.45 | 9.7 | 3.70 | 9.1 | 3.45 |
| Nominal | -25 | - | - | 5.0 | 1.70 | 4.9 | 1.55 | 4.7 | 1.44 | - | - | - | - | - | - |
| | -20 | - | - | 6.7 | 2.20 | 6.6 | 1.95 | 6.4 | 1.70 | 6.2 | 1.45 | - | - | - | - |
| | -15 | - | - | 7.3 | 2.50 | 7.0 | 2.25 | 6.6 | 2.00 | 6.7 | 1.75 | 6.8 | 1.55 | - | - |
| | -10 | 8.0 | 3.55 | 7.6 | 2.99 | 7.5 | 2.65 | 7.3 | 2.35 | 7.3 | 2.00 | 7.2 | 1.91 | - | - |
| | -7 | 8.0 | 3.70 | 8.0 | 3.10 | 8.0 | 2.80 | 8.0 | 2.45 | 8.0 | 2.10 | 8.0 | 1.95 | 7.2 | 1.55 |
| | 2 | 8.0 | 4.35 | 8.0 | 3.55 | 8.0 | 3.15 | 8.0 | 2.75 | 8.0 | 2.40 | 8.0 | 1.82 | 8.0 | 1.70 |
| | 7 | 6.0 | 5.65 | 6.0 | 4.76 | 6.0 | 4.20 | 6.0 | 3.65 | 6.0 | 3.20 | 6.0 | 2.65 | 6.0 | 2.40 |
| | 12 | 6.0 | 6.45 | 6.0 | 5.35 | 6.0 | 4.80 | 6.0 | 4.25 | 6.0 | 3.65 | 6.0 | 3.10 | 6.0 | 2.75 |
| | 15 | 6.0 | 7.05 | 6.0 | 5.95 | 6.0 | 5.25 | 6.0 | 4.55 | 6.0 | 3.95 | 6.0 | 3.45 | 6.0 | 2.95 |
| | 20 | 6.0 | 8.05 | 6.0 | 6.90 | 6.0 | 6.05 | 6.0 | 5.15 | 6.0 | 4.55 | 6.0 | 3.75 | 6.0 | 3.40 |
| Mid | -25 | - | - | 4.0 | 1.65 | 4.0 | 1.55 | 4.0 | 1.45 | - | - | - | - | - | - |
| | -20 | - | - | 5.4 | 2.35 | 5.3 | 2.10 | 5.1 | 1.80 | 5.0 | 1.50 | - | - | - | - |
| | -15 | - | - | 5.8 | 2.60 | 5.6 | 2.35 | 5.3 | 2.05 | 5.4 | 1.80 | 5.4 | 1.60 | - | - |
| | -10 | 6.4 | 3.75 | 6.1 | 3.10 | 6.0 | 2.75 | 5.8 | 2.35 | 5.8 | 2.05 | 5.8 | 1.95 | - | - |
| | -7 | 6.4 | 3.85 | 6.4 | 3.15 | 6.4 | 2.80 | 6.4 | 2.45 | 6.4 | 2.15 | 6.4 | 2.00 | 6.0 | 1.65 |
| | 2 | 6.4 | 4.55 | 6.4 | 3.60 | 6.4 | 3.25 | 6.4 | 2.85 | 6.4 | 2.50 | 6.4 | 2.10 | 6.4 | 1.80 |
| | 7 | 4.8 | 5.40 | 4.8 | 4.65 | 4.8 | 4.15 | 4.8 | 3.60 | 4.8 | 3.10 | 4.8 | 2.65 | 4.8 | 2.45 |
| | 12 | 4.8 | 6.10 | 4.8 | 5.10 | 4.8 | 4.65 | 4.8 | 4.20 | 4.8 | 3.60 | 4.8 | 3.05 | 4.8 | 2.70 |
| | 15 | 4.8 | 6.95 | 4.8 | 5.85 | 4.8 | 5.15 | 4.8 | 4.45 | 4.8 | 3.85 | 4.8 | 3.35 | 4.8 | 2.90 |
| | 20 | 4.8 | 7.70 | 4.8 | 6.75 | 4.8 | 5.90 | 4.8 | 5.00 | 4.8 | 4.35 | 4.8 | 3.65 | 4.8 | 3.35 |
| Min | -25 | - | - | 3.6 | 1.60 | 3.5 | 1.50 | 3.4 | 1.35 | - | - | - | - | - | - |
| | -20 | - | - | 4.3 | 2.35 | 4.2 | 2.10 | 4.1 | 1.80 | 3.9 | 1.50 | - | - | - | - |
| | -15 | - | - | 4.9 | 2.55 | 4.8 | 2.30 | 4.7 | 2.00 | 4.6 | 1.75 | 4.5 | 1.55 | - | - |
| | -10 | 3.8 | 3.60 | 3.5 | 2.85 | 3.4 | 2.55 | 3.3 | 2.20 | 3.2 | 1.90 | 3.1 | 1.60 | - | - |
| | -7 | 3.9 | 3.65 | 3.5 | 2.85 | 3.3 | 2.55 | 3.1 | 2.20 | 3.0 | 1.95 | 2.9 | 1.70 | 3.7 | 1.65 |
| | 2 | 3.4 | 4.60 | 3.1 | 3.60 | 2.9 | 3.20 | 2.6 | 2.75 | 2.4 | 2.05 | 2.1 | 1.80 | 3.2 | 1.80 |
| | 7 | 2.7 | 4.80 | 2.4 | 3.50 | 2.3 | 3.30 | 2.2 | 3.05 | 2.0 | 2.50 | 1.7 | 2.30 | 2.6 | 2.20 |
| | 12 | 3.3 | 5.35 | 3.0 | 4.45 | 2.8 | 4.20 | 2.6 | 3.90 | 2.2 | 3.20 | 1.8 | 2.60 | 2.9 | 2.50 |
| | 15 | 3.8 | 6.75 | 3.2 | 5.60 | 3.0 | 4.85 | 2.8 | 4.10 | 2.4 | 3.45 | 1.9 | 2.90 | 3.1 | 2.75 |
| | 20 | 4.2 | 7.45 | 3.7 | 6.55 | 3.4 | 5.65 | 3.1 | 4.75 | 2.9 | 3.90 | 2.6 | 3.30 | 3.5 | 3.25 |

## ■ PUD-SWM100VAA(-BS) PUD-SWM100YAA(-BS)

| Water outlet temperature[°C] | | 25 | | 35 | | 40 | | 45 | | 50 | | 55 | | 60 | |
|---|---|---|---|---|---|---|---|---|---|---|---|---|---|---|---|
| Ambient temperature[°C] | | Capacity | COP | Capacity | COP | Capacity | COP | Capacity | COP | Capacity | COP | Capacity | COP | Capacity | COP |
| Max | -25 | - | - | 7.0 | 1.80 | 7.0 | 1.70 | 6.9 | 1.60 | - | - | - | - | - | - |
| | -20 | - | - | 8.0 | 2.10 | 7.8 | 1.90 | 7.6 | 1.70 | 7.0 | 1.40 | - | - | - | - |
| | -15 | - | - | 9.0 | 2.20 | 8.8 | 2.05 | 8.5 | 1.85 | 7.9 | 1.65 | 7.3 | 1.55 | - | - |
| | -10 | 11.5 | 2.70 | 11.0 | 2.50 | 10.8 | 2.30 | 10.5 | 2.05 | 9.7 | 1.95 | 9.3 | 1.80 | - | - |
| | -7 | 12.4 | 2.90 | 11.9 | 2.65 | 11.6 | 2.45 | 11.3 | 2.20 | 10.2 | 2.00 | 9.5 | 1.85 | 7.8 | 1.60 |
| | 2 | 12.4 | 3.15 | 12.1 | 3.00 | 11.8 | 2.75 | 11.5 | 2.45 | 11.0 | 2.25 | 10.0 | 1.93 | 8.7 | 1.85 |
| | 7 | 11.4 | 5.50 | 10.9 | 4.65 | 10.5 | 4.00 | 10.0 | 3.35 | 9.7 | 3.05 | 9.2 | 2.45 | 8.5 | 2.25 |
| | 12 | 12.9 | 6.30 | 12.2 | 5.45 | 12.0 | 4.75 | 11.7 | 4.00 | 11.1 | 3.50 | 10.5 | 2.95 | 9.5 | 2.55 |
| | 15 | 13.4 | 6.70 | 13.0 | 5.65 | 12.7 | 5.10 | 12.4 | 4.50 | 11.8 | 4.10 | 11.1 | 3.55 | 10.0 | 2.90 |
| | 20 | 14.2 | 7.60 | 13.8 | 6.25 | 13.5 | 5.65 | 13.1 | 5.00 | 12.5 | 4.35 | 11.4 | 3.75 | 10.5 | 3.55 |
| Nominal | -25 | - | - | 7.0 | 1.80 | 7.0 | 1.70 | 6.9 | 1.60 | - | - | - | - | - | - |
| | -20 | - | - | 8.0 | 2.10 | 7.8 | 1.90 | 7.6 | 1.70 | 7.0 | 1.40 | - | - | - | - |
| | -15 | - | - | 9.0 | 2.20 | 8.8 | 2.05 | 8.5 | 1.85 | 7.9 | 1.65 | 7.3 | 1.55 | - | - |
| | -10 | 10.0 | 3.25 | 10.0 | 2.86 | 10.0 | 2.50 | 10.0 | 2.15 | 9.7 | 1.95 | 9.3 | 1.80 | - | - |
| | -7 | 10.0 | 3.50 | 10.0 | 2.95 | 10.0 | 2.65 | 10.0 | 2.35 | 10.0 | 2.05 | 9.5 | 1.85 | 7.8 | 1.60 |
| | 2 | 10.0 | 4.10 | 10.0 | 3.30 | 10.0 | 3.00 | 10.0 | 2.65 | 10.0 | 2.35 | 10.0 | 1.93 | 8.7 | 1.85 |
| | 7 | 8.0 | 5.90 | 8.0 | 5.00 | 8.0 | 4.30 | 8.0 | 3.60 | 8.0 | 3.20 | 8.0 | 2.60 | 8.0 | 2.30 |
| | 12 | 8.0 | 7.20 | 8.0 | 5.90 | 8.0 | 5.10 | 8.0 | 4.30 | 8.0 | 3.75 | 8.0 | 3.10 | 8.0 | 2.65 |
| | 15 | 8.0 | 7.50 | 8.0 | 6.20 | 8.0 | 5.50 | 8.0 | 4.80 | 8.0 | 4.25 | 8.0 | 3.65 | 8.0 | 2.95 |
| | 20 | 8.0 | 8.65 | 8.0 | 7.10 | 8.0 | 6.25 | 8.0 | 5.40 | 8.0 | 4.65 | 8.0 | 3.85 | 8.0 | 3.75 |
| Mid | -25 | - | - | 5.6 | 1.75 | 5.6 | 1.70 | 5.5 | 1.60 | - | - | - | - | - | - |
| | -20 | - | - | 6.4 | 2.35 | 6.3 | 2.10 | 6.1 | 1.80 | 5.6 | 1.50 | - | - | - | - |
| | -15 | - | - | 7.2 | 2.50 | 7.0 | 2.25 | 6.8 | 2.00 | 6.3 | 1.80 | 5.8 | 1.60 | - | - |
| | -10 | 8.0 | 3.70 | 8.0 | 3.10 | 8.0 | 2.70 | 8.0 | 2.30 | 7.8 | 2.05 | 7.4 | 1.85 | - | - |
| | -7 | 8.0 | 3.75 | 8.0 | 3.10 | 8.0 | 2.80 | 8.0 | 2.45 | 8.0 | 2.15 | 7.6 | 1.95 | 6.2 | 1.65 |
| | 2 | 8.0 | 4.45 | 8.0 | 3.60 | 8.0 | 3.25 | 8.0 | 2.85 | 8.0 | 2.50 | 8.0 | 2.15 | 7.0 | 1.95 |
| | 7 | 6.4 | 5.80 | 6.4 | 5.00 | 6.4 | 4.35 | 6.4 | 3.70 | 6.4 | 3.25 | 6.4 | 2.75 | 6.4 | 2.35 |
| | 12 | 6.4 | 7.25 | 6.4 | 5.55 | 6.4 | 4.95 | 6.4 | 4.30 | 6.4 | 3.75 | 6.4 | 3.10 | 6.4 | 2.70 |
| | 15 | 6.4 | 7.50 | 6.4 | 6.15 | 6.4 | 5.45 | 6.4 | 4.70 | 6.4 | 4.15 | 6.4 | 3.60 | 6.4 | 2.95 |
| | 20 | 6.4 | 8.35 | 6.4 | 7.05 | 6.4 | 6.20 | 6.4 | 5.30 | 6.4 | 4.60 | 6.4 | 3.80 | 6.4 | 3.70 |
| Min | -25 | - | - | 4.3 | 1.65 | 4.3 | 1.60 | 4.2 | 1.50 | - | - | - | - | - | - |
| | -20 | - | - | 4.9 | 2.40 | 4.8 | 2.15 | 4.7 | 1.85 | 4.5 | 1.55 | - | - | - | - |
| | -15 | - | - | 5.6 | 2.70 | 5.5 | 2.40 | 5.4 | 2.05 | 5.3 | 1.85 | 5.2 | 1.55 | - | - |
| | -10 | 3.8 | 3.60 | 3.6 | 2.90 | 3.5 | 2.60 | 3.4 | 2.25 | 3.3 | 1.90 | 3.1 | 1.60 | - | - |
| | -7 | 3.8 | 3.70 | 3.5 | 2.90 | 3.4 | 2.60 | 3.2 | 2.25 | 3.0 | 2.00 | 2.9 | 1.70 | 3.7 | 1.65 |
| | 2 | 3.5 | 4.70 | 3.2 | 3.60 | 3.0 | 3.20 | 2.7 | 2.75 | 2.4 | 2.05 | 2.1 | 1.80 | 3.2 | 1.90 |
| | 7 | 2.7 | 4.90 | 2.5 | 3.55 | 2.4 | 3.35 | 2.3 | 3.10 | 2.0 | 2.60 | 1.7 | 2.30 | 2.6 | 2.25 |
| | 12 | 3.4 | 6.90 | 3.1 | 4.55 | 2.9 | 4.25 | 2.7 | 3.95 | 2.3 | 3.25 | 1.9 | 2.65 | 2.9 | 2.55 |
| | 15 | 4.0 | 7.30 | 3.3 | 5.70 | 3.1 | 4.95 | 2.9 | 4.20 | 2.5 | 3.60 | 2.0 | 3.00 | 3.1 | 2.75 |
| | 20 | 4.3 | 7.60 | 3.8 | 6.65 | 3.5 | 5.75 | 3.2 | 4.85 | 2.9 | 4.10 | 2.6 | 3.30 | 3.5 | 3.35 |

## ■ PUD-SWM120VAA(-BS) PUD-SWM120YAA(-BS)

| Water outlet temperature[°C] | | 25 | | 35 | | 40 | | 45 | | 50 | | 55 | | 60 | |
|---|---|---|---|---|---|---|---|---|---|---|---|---|---|---|---|
| Ambient temperature[°C] | | Capacity | COP | Capacity | COP | Capacity | COP | Capacity | COP | Capacity | COP | Capacity | COP | Capacity | COP |
| Max | -25 | - | - | 8.2 | 1.70 | 8.1 | 1.65 | 8.0 | 1.57 | - | - | - | - | - | - |
| | -20 | - | - | 9.2 | 1.80 | 8.9 | 1.75 | 8.6 | 1.65 | 7.3 | 1.40 | - | - | - | - |
| | -15 | - | - | 10.4 | 2.10 | 10.0 | 1.95 | 9.5 | 1.80 | 8.9 | 1.60 | 8.3 | 1.46 | - | - |
| | -10 | 12.6 | 2.50 | 12.0 | 2.32 | 11.7 | 2.15 | 11.3 | 2.00 | 10.9 | 1.85 | 10.5 | 1.71 | - | - |
| | -7 | 13.7 | 2.70 | 13.3 | 2.45 | 12.8 | 2.30 | 12.3 | 2.10 | 11.7 | 1.90 | 11.0 | 1.75 | 9.7 | 1.55 |
| | 2 | 13.0 | 3.15 | 12.7 | 2.85 | 12.6 | 2.60 | 12.4 | 2.35 | 12.2 | 2.10 | 12.0 | 1.85 | 10.8 | 1.70 |
| | 7 | 13.2 | 4.90 | 12.9 | 4.10 | 12.5 | 3.60 | 12.1 | 3.10 | 11.7 | 2.85 | 11.2 | 2.55 | 10.5 | 2.20 |
| | 12 | 15.0 | 5.40 | 14.5 | 4.55 | 14.2 | 4.10 | 13.8 | 3.60 | 13.2 | 3.10 | 12.6 | 2.65 | 11.7 | 2.30 |
| | 15 | 15.9 | 5.90 | 15.4 | 5.00 | 15.1 | 4.60 | 14.7 | 4.15 | 14.0 | 3.75 | 13.3 | 3.30 | 12.4 | 2.65 |
| | 20 | 16.9 | 6.10 | 16.4 | 5.30 | 16.2 | 4.85 | 15.9 | 4.40 | 15.2 | 3.90 | 14.5 | 3.40 | 13.5 | 3.00 |
| Nominal | -25 | - | - | 8.2 | 1.70 | 8.1 | 1.65 | 8.0 | 1.57 | - | - | - | - | - | - |
| | -20 | - | - | 9.2 | 1.80 | 8.9 | 1.75 | 8.6 | 1.65 | 7.3 | 1.40 | - | - | - | - |
| | -15 | - | - | 10.4 | 2.10 | 10.0 | 1.95 | 9.5 | 1.80 | 8.9 | 1.60 | 8.3 | 1.46 | - | - |
| | -10 | 12.0 | 2.80 | 11.0 | 2.72 | 11.0 | 2.40 | 11.0 | 2.05 | 10.9 | 1.85 | 10.5 | 1.71 | - | - |
| | -7 | 12.0 | 3.20 | 12.0 | 2.70 | 12.0 | 2.45 | 12.0 | 2.15 | 11.5 | 1.95 | 11.0 | 1.75 | 9.7 | 1.55 |
| | 2 | 12.0 | 3.55 | 12.0 | 3.24 | 12.0 | 2.80 | 12.0 | 2.40 | 12.0 | 2.15 | 12.0 | 1.85 | 10.8 | 1.70 |
| | 7 | 10.0 | 5.75 | 10.0 | 4.70 | 10.0 | 4.05 | 10.0 | 3.40 | 10.0 | 3.05 | 10.0 | 2.65 | 10.0 | 2.25 |
| | 12 | 10.0 | 7.15 | 10.0 | 5.80 | 10.0 | 5.00 | 10.0 | 4.20 | 10.0 | 3.65 | 10.0 | 3.00 | 10.0 | 2.50 |
| | 15 | 10.0 | 7.45 | 10.0 | 6.15 | 10.0 | 5.45 | 10.0 | 4.75 | 10.0 | 4.20 | 10.0 | 3.60 | 10.0 | 2.90 |
| | 20 | 10.0 | 8.65 | 10.0 | 7.00 | 10.0 | 6.20 | 10.0 | 5.35 | 10.0 | 4.60 | 10.0 | 3.80 | 10.0 | 3.60 |
| Mid | -25 | - | - | 6.6 | 1.80 | 6.5 | 1.75 | 6.4 | 1.65 | - | - | - | - | - | - |
| | -20 | - | - | 7.4 | 2.20 | 7.2 | 2.00 | 6.9 | 1.75 | 5.8 | 1.50 | - | - | - | - |
| | -15 | - | - | 8.3 | 2.40 | 8.0 | 2.20 | 7.6 | 2.00 | 7.1 | 1.75 | 6.6 | 1.60 | - | - |
| | -10 | 9.6 | 3.45 | 8.8 | 3.00 | 8.8 | 2.65 | 8.8 | 2.30 | 8.7 | 2.05 | 8.4 | 1.85 | - | - |
| | -7 | 9.6 | 3.60 | 9.6 | 3.05 | 9.6 | 2.75 | 9.6 | 2.40 | 9.2 | 2.10 | 8.8 | 1.90 | 7.8 | 1.60 |
| | 2 | 9.6 | 4.25 | 9.6 | 3.50 | 9.6 | 3.15 | 9.6 | 2.75 | 9.6 | 2.45 | 9.6 | 2.10 | 8.6 | 1.90 |
| | 7 | 8.0 | 5.90 | 8.0 | 5.00 | 8.0 | 4.35 | 8.0 | 3.65 | 8.0 | 3.20 | 8.0 | 2.70 | 8.0 | 2.30 |
| | 12 | 8.0 | 7.20 | 8.0 | 5.90 | 8.0 | 5.10 | 8.0 | 4.30 | 8.0 | 3.75 | 8.0 | 3.10 | 8.0 | 2.65 |
| | 15 | 8.0 | 7.55 | 8.0 | 6.20 | 8.0 | 5.50 | 8.0 | 4.80 | 8.0 | 4.25 | 8.0 | 3.65 | 8.0 | 2.95 |
| | 20 | 8.0 | 8.70 | 8.0 | 7.10 | 8.0 | 6.25 | 8.0 | 5.40 | 8.0 | 4.65 | 8.0 | 3.85 | 8.0 | 3.75 |
| Min | -25 | - | - | 4.3 | 1.65 | 4.3 | 1.60 | 4.2 | 1.50 | - | - | - | - | - | - |
| | -20 | - | - | 4.9 | 2.40 | 4.8 | 2.15 | 4.7 | 1.85 | 4.5 | 1.55 | - | - | - | - |
| | -15 | - | - | 5.6 | 2.70 | 5.5 | 2.40 | 5.4 | 2.05 | 5.3 | 1.85 | 5.2 | 1.55 | - | - |
| | -10 | 3.8 | 3.60 | 3.6 | 2.90 | 3.5 | 2.60 | 3.4 | 2.25 | 3.3 | 1.90 | 3.1 | 1.60 | - | - |
| | -7 | 3.8 | 3.70 | 3.5 | 2.90 | 3.4 | 2.60 | 3.2 | 2.25 | 3.0 | 2.00 | 2.9 | 1.70 | 3.7 | 1.65 |
| | 2 | 3.5 | 4.70 | 3.2 | 3.60 | 3.0 | 3.20 | 2.7 | 2.75 | 2.4 | 2.05 | 2.1 | 1.80 | 3.2 | 1.90 |
| | 7 | 2.7 | 4.90 | 2.5 | 3.55 | 2.4 | 3.35 | 2.3 | 3.10 | 2.0 | 2.70 | 1.7 | 2.30 | 2.6 | 2.25 |
| | 12 | 3.4 | 6.90 | 3.1 | 4.55 | 2.9 | 4.25 | 2.7 | 3.95 | 2.3 | 3.35 | 1.9 | 2.70 | 2.9 | 2.60 |
| | 15 | 4.0 | 7.30 | 3.3 | 5.70 | 3.1 | 4.95 | 2.9 | 4.20 | 2.5 | 3.60 | 2.0 | 3.00 | 3.1 | 2.75 |
| | 20 | 4.3 | 7.60 | 3.8 | 6.65 | 3.5 | 5.75 | 3.2 | 4.85 | 2.9 | 4.10 | 2.6 | 3.30 | 3.5 | 3.35 |

## ■ PUD-SHWM60VAA(-BS)

| Water outlet temperature[°C] | | 25 | | 35 | | 40 | | 45 | | 50 | | 55 | | 60 | |
|---|---|---|---|---|---|---|---|---|---|---|---|---|---|---|---|
| Ambient temperature[°C] | | Capacity | COP | Capacity | COP | Capacity | COP | Capacity | COP | Capacity | COP | Capacity | COP | Capacity | COP |
| Max | -28 INJ | - | - | 4.7 | 1.70 | 4.6 | 1.55 | 4.4 | 1.42 | - | - | - | - | - | - |
| | -20 INJ | - | - | 6.0 | 2.25 | 5.9 | 2.00 | 5.7 | 1.75 | 5.3 | 1.55 | - | - | - | - |
| | -15 INJ | - | - | 7.3 | 2.60 | 7.2 | 2.35 | 7.0 | 2.05 | 6.6 | 1.90 | 5.8 | 1.70 | - | - |
| | -10 INJ | 8.7 | 3.50 | 8.0 | 3.05 | 7.7 | 2.70 | 7.3 | 2.35 | 7.0 | 2.10 | 6.5 | 1.90 | - | - |
| | -7 INJ | 9.0 | 3.60 | 8.3 | 3.10 | 8.0 | 2.80 | 7.6 | 2.45 | 7.3 | 2.15 | 6.9 | 1.95 | 5.8 | 1.70 |
| | 2 | 7.5 | 4.40 | 7.0 | 3.60 | 6.8 | 3.25 | 6.5 | 2.90 | 6.2 | 2.45 | 6.0 | 1.91 | 6.0 | 1.75 |
| | 7 | 9.0 | 5.50 | 8.3 | 4.70 | 8.0 | 4.15 | 7.6 | 3.55 | 7.2 | 3.15 | 6.9 | 2.65 | 6.2 | 2.35 |
| | 12 | 9.6 | 6.55 | 9.2 | 5.50 | 9.1 | 4.85 | 8.9 | 4.15 | 8.4 | 3.65 | 7.9 | 3.15 | 7.0 | 2.75 |
| | 15 | 9.9 | 7.05 | 9.6 | 5.90 | 9.5 | 5.20 | 9.3 | 4.50 | 8.8 | 3.90 | 8.3 | 3.45 | 7.3 | 3.00 |
| | 20 | 10.2 | 8.10 | 10.0 | 6.80 | 9.9 | 6.00 | 9.7 | 5.20 | 9.5 | 4.55 | 9.2 | 3.75 | 8.4 | 3.45 |
| Nominal | -28 INJ | - | - | 4.7 | 1.70 | 4.6 | 1.55 | 4.4 | 1.42 | - | - | - | - | - | - |
| | -20 INJ | - | - | 6.0 | 2.25 | 5.9 | 2.00 | 5.7 | 1.75 | 5.3 | 1.55 | - | - | - | - |
| | -15 INJ | - | - | 6.0 | 2.66 | 6.0 | 2.35 | 6.0 | 2.05 | 6.0 | 1.85 | 5.8 | 1.70 | - | - |
| | -10 INJ | 6.0 | 3.75 | 6.0 | 3.21 | 6.0 | 2.85 | 6.0 | 2.50 | 6.0 | 2.10 | 6.0 | 2.02 | - | - |
| | -7 | 6.0 | 3.85 | 6.0 | 3.15 | 6.0 | 2.85 | 6.0 | 2.50 | 6.0 | 2.20 | 6.0 | 2.00 | 5.8 | 1.70 |
| | 2 | 6.0 | 4.60 | 6.0 | 3.80 | 6.0 | 3.40 | 6.0 | 2.95 | 6.0 | 2.50 | 6.0 | 1.91 | 6.0 | 1.75 |
| | 7 | 5.0 | 5.45 | 5.0 | 4.99 | 5.0 | 4.25 | 5.0 | 3.60 | 5.0 | 3.15 | 5.0 | 2.65 | 5.0 | 2.45 |
| | 12 | 5.0 | 6.15 | 5.0 | 5.15 | 5.0 | 4.70 | 5.0 | 4.20 | 5.0 | 3.60 | 5.0 | 3.10 | 5.0 | 2.70 |
| | 15 | 5.0 | 6.95 | 5.0 | 5.80 | 5.0 | 5.10 | 5.0 | 4.40 | 5.0 | 3.85 | 5.0 | 3.35 | 5.0 | 2.95 |
| | 20 | 5.0 | 7.75 | 5.0 | 6.75 | 5.0 | 5.90 | 5.0 | 5.05 | 5.0 | 4.40 | 5.0 | 3.75 | 5.0 | 3.35 |
| Mid | -28 | - | - | 3.8 | 1.65 | 3.6 | 1.50 | 3.4 | 1.35 | - | - | - | - | - | - |
| | -20 | - | - | 4.8 | 2.35 | 4.7 | 2.10 | 4.6 | 1.80 | 4.3 | 1.50 | - | - | - | - |
| | -15 | - | - | 4.9 | 2.55 | 4.9 | 2.30 | 4.8 | 2.00 | 4.8 | 1.80 | 4.6 | 1.60 | - | - |
| | -10 | 4.8 | 3.75 | 4.8 | 3.10 | 4.8 | 2.75 | 4.8 | 2.40 | 4.8 | 2.05 | 4.8 | 1.80 | - | - |
| | -7 | 4.8 | 3.75 | 4.8 | 3.20 | 4.8 | 2.80 | 4.8 | 2.40 | 4.8 | 2.15 | 4.8 | 1.90 | 4.6 | 1.70 |
| | 2 | 4.8 | 4.65 | 4.8 | 3.80 | 4.8 | 3.40 | 4.8 | 2.95 | 4.8 | 2.50 | 4.8 | 2.15 | 4.8 | 1.85 |
| | 7 | 4.0 | 5.25 | 4.0 | 4.35 | 4.0 | 3.95 | 4.0 | 3.50 | 4.0 | 3.00 | 4.0 | 2.70 | 4.0 | 2.40 |
| | 12 | 4.0 | 5.75 | 4.0 | 4.85 | 4.0 | 4.50 | 4.0 | 4.10 | 4.0 | 3.50 | 4.0 | 3.00 | 4.0 | 2.60 |
| | 15 | 4.0 | 6.80 | 4.0 | 5.70 | 4.0 | 5.00 | 4.0 | 4.30 | 4.0 | 3.75 | 4.0 | 3.25 | 4.0 | 2.90 |
| | 20 | 4.2 | 7.45 | 4.0 | 6.60 | 4.0 | 5.75 | 4.0 | 4.90 | 4.0 | 4.20 | 4.0 | 3.65 | 4.0 | 3.30 |
| Min | -28 | - | - | 3.6 | 1.60 | 3.5 | 1.50 | 3.4 | 1.35 | - | - | - | - | - | - |
| | -20 | - | - | 4.3 | 2.35 | 4.2 | 2.10 | 4.1 | 1.80 | 3.9 | 1.50 | - | - | - | - |
| | -15 | - | - | 4.9 | 2.55 | 4.8 | 2.30 | 4.7 | 2.00 | 4.6 | 1.75 | 4.5 | 1.55 | - | - |
| | -10 | 3.8 | 3.60 | 3.5 | 2.85 | 3.4 | 2.55 | 3.3 | 2.20 | 3.2 | 1.90 | 3.1 | 1.60 | - | - |
| | -7 | 3.8 | 3.70 | 3.5 | 2.90 | 3.4 | 2.60 | 3.2 | 2.25 | 3.1 | 2.00 | 2.9 | 1.70 | 3.7 | 1.65 |
| | 2 | 3.4 | 4.60 | 3.1 | 3.60 | 2.9 | 3.20 | 2.6 | 2.75 | 2.4 | 2.05 | 2.1 | 1.80 | 3.2 | 1.80 |
| | 7 | 2.7 | 4.80 | 2.4 | 3.50 | 2.3 | 3.30 | 2.2 | 3.05 | 2.0 | 2.50 | 1.7 | 2.30 | 2.6 | 2.20 |
| | 12 | 3.3 | 5.35 | 3.0 | 4.45 | 2.8 | 4.20 | 2.6 | 3.90 | 2.2 | 3.20 | 1.8 | 2.60 | 2.9 | 2.50 |
| | 15 | 3.8 | 6.75 | 3.2 | 5.60 | 3.0 | 4.85 | 2.8 | 4.10 | 2.4 | 3.45 | 1.9 | 2.90 | 3.1 | 2.80 |
| | 20 | 4.2 | 7.45 | 3.7 | 6.55 | 3.4 | 5.65 | 3.1 | 4.75 | 2.9 | 3.90 | 2.6 | 3.30 | 3.5 | 3.25 |

## ■ PUD-SHWM80VAA(-BS) PUD-SHWM80YAA(-BS)

| Water outlet temperature[°C] | | 25 | | 35 | | 40 | | 45 | | 50 | | 55 | | 60 | |
|---|---|---|---|---|---|---|---|---|---|---|---|---|---|---|---|
| Ambient temperature[°C] | | Capacity | COP | Capacity | COP | Capacity | COP | Capacity | COP | Capacity | COP | Capacity | COP | Capacity | COP |
| Max | -28 INJ | - | - | 5.6 | 1.75 | 5.5 | 1.60 | 5.3 | 1.41 | - | - | - | - | - | - |
| | -20 INJ | - | - | 7.6 | 2.20 | 7.5 | 1.95 | 7.3 | 1.70 | 7.0 | 1.45 | - | - | - | - |
| | -15 INJ | - | - | 8.8 | 2.50 | 8.5 | 2.25 | 8.2 | 1.95 | 7.9 | 1.85 | 7.4 | 1.60 | - | - |
| | -10 INJ | 10.3 | 3.30 | 9.7 | 2.90 | 9.4 | 2.65 | 9.1 | 2.40 | 8.7 | 2.10 | 8.4 | 1.95 | - | - |
| | -7 INJ | 10.6 | 3.30 | 10.0 | 2.97 | 9.7 | 2.65 | 9.4 | 2.35 | 9.1 | 2.15 | 8.8 | 1.95 | 7.6 | 1.55 |
| | 2 | 10.1 | 3.90 | 9.5 | 3.30 | 9.3 | 2.95 | 9.0 | 2.60 | 8.7 | 2.40 | 8.4 | 1.75 | 8.2 | 1.65 |
| | 7 | 9.6 | 5.40 | 8.9 | 4.60 | 8.6 | 4.05 | 8.2 | 3.45 | 7.9 | 3.10 | 7.5 | 2.55 | 6.8 | 2.30 |
| | 12 | 10.4 | 6.35 | 9.9 | 5.45 | 9.7 | 4.80 | 9.5 | 4.10 | 9.1 | 3.60 | 8.6 | 3.10 | 7.7 | 2.70 |
| | 15 | 10.7 | 6.95 | 10.4 | 5.85 | 10.2 | 5.20 | 10.0 | 4.50 | 9.5 | 3.85 | 9.0 | 3.45 | 8.0 | 2.95 |
| | 20 | 10.9 | 7.90 | 10.8 | 6.70 | 10.6 | 5.95 | 10.4 | 5.15 | 10.2 | 4.45 | 9.7 | 3.70 | 9.1 | 3.45 |
| Nominal | -28 INJ | - | - | 5.6 | 1.75 | 5.5 | 1.60 | 5.3 | 1.41 | - | - | - | - | - | - |
| | -20 INJ | - | - | 7.6 | 2.20 | 7.5 | 1.95 | 7.3 | 1.70 | 7.0 | 1.45 | - | - | - | - |
| | -15 INJ | - | - | 8.0 | 2.66 | 8.0 | 2.35 | 8.0 | 2.00 | 7.9 | 1.85 | 7.4 | 1.60 | - | - |
| | -10 INJ | 8.0 | 3.55 | 8.0 | 3.09 | 8.0 | 2.75 | 8.0 | 2.40 | 8.0 | 2.15 | 8.0 | 1.97 | - | - |
| | -7 INJ | 8.0 | 3.75 | 8.0 | 3.14 | 8.0 | 2.80 | 8.0 | 2.45 | 8.0 | 2.25 | 8.0 | 2.05 | 7.6 | 1.55 |
| | 2 | 8.0 | 4.45 | 8.0 | 3.75 | 8.0 | 3.30 | 8.0 | 2.85 | 8.0 | 2.50 | 8.0 | 1.88 | 8.0 | 1.70 |
| | 7 | 6.0 | 5.65 | 6.0 | 5.03 | 6.0 | 4.35 | 6.0 | 3.65 | 6.0 | 3.20 | 6.0 | 2.65 | 6.0 | 2.40 |
| | 12 | 6.0 | 6.45 | 6.0 | 5.35 | 6.0 | 4.80 | 6.0 | 4.25 | 6.0 | 3.65 | 6.0 | 3.10 | 6.0 | 2.75 |
| | 15 | 6.0 | 7.05 | 6.0 | 5.95 | 6.0 | 5.25 | 6.0 | 4.55 | 6.0 | 3.95 | 6.0 | 3.45 | 6.0 | 2.95 |
| | 20 | 6.0 | 8.05 | 6.0 | 6.90 | 6.0 | 6.05 | 6.0 | 5.15 | 6.0 | 4.55 | 6.0 | 3.75 | 6.0 | 3.40 |
| Mid | -28 INJ | - | - | 4.5 | 1.70 | 4.4 | 1.55 | 4.2 | 1.40 | - | - | - | - | - | - |
| | -20 INJ | - | - | 6.1 | 2.35 | 6.0 | 2.05 | 5.8 | 1.75 | 5.6 | 1.50 | - | - | - | - |
| | -15 INJ | - | - | 6.4 | 2.70 | 6.4 | 2.40 | 6.4 | 2.05 | 6.3 | 1.90 | 5.9 | 1.65 | - | - |
| | -10 INJ | 6.4 | 3.75 | 6.4 | 3.10 | 6.4 | 2.80 | 6.4 | 2.50 | 6.4 | 2.15 | 6.4 | 1.80 | - | - |
| | -7 | 6.4 | 3.85 | 6.4 | 3.15 | 6.4 | 2.85 | 6.4 | 2.50 | 6.4 | 2.25 | 6.4 | 2.05 | 6.1 | 1.65 |
| | 2 | 6.4 | 4.60 | 6.4 | 3.80 | 6.4 | 3.40 | 6.4 | 2.95 | 6.4 | 2.55 | 6.4 | 2.15 | 6.4 | 1.85 |
| | 7 | 4.8 | 5.40 | 4.8 | 4.65 | 4.8 | 4.15 | 4.8 | 3.60 | 4.8 | 3.10 | 4.8 | 2.65 | 4.8 | 2.45 |
| | 12 | 4.8 | 6.10 | 4.8 | 5.10 | 4.8 | 4.65 | 4.8 | 4.20 | 4.8 | 3.60 | 4.8 | 3.05 | 4.8 | 2.70 |
| | 15 | 4.8 | 6.95 | 4.8 | 5.85 | 4.8 | 5.15 | 4.8 | 4.45 | 4.8 | 3.85 | 4.8 | 3.35 | 4.8 | 2.90 |
| | 20 | 4.8 | 7.70 | 4.8 | 6.75 | 4.8 | 5.90 | 4.8 | 5.00 | 4.8 | 4.35 | 4.8 | 3.65 | 4.8 | 3.35 |
| Min | -28 | - | - | 3.6 | 1.60 | 3.5 | 1.50 | 3.4 | 1.35 | - | - | - | - | - | - |
| | -20 | - | - | 4.3 | 2.35 | 4.2 | 2.10 | 4.1 | 1.80 | 3.9 | 1.50 | - | - | - | - |
| | -15 | - | - | 4.9 | 2.55 | 4.8 | 2.30 | 4.7 | 2.00 | 4.6 | 1.75 | 4.5 | 1.55 | - | - |
| | -10 | 3.8 | 3.60 | 3.5 | 2.85 | 3.4 | 2.55 | 3.3 | 2.20 | 3.2 | 1.90 | 3.1 | 1.60 | - | - |
| | -7 | 3.8 | 3.70 | 3.5 | 2.90 | 3.4 | 2.60 | 3.2 | 2.25 | 3.1 | 2.00 | 2.9 | 1.70 | 3.7 | 1.65 |
| | 2 | 3.4 | 4.60 | 3.1 | 3.60 | 2.9 | 3.20 | 2.6 | 2.75 | 2.4 | 2.05 | 2.1 | 1.80 | 3.2 | 1.80 |
| | 7 | 2.7 | 4.80 | 2.4 | 3.50 | 2.3 | 3.30 | 2.2 | 3.05 | 2.0 | 2.50 | 1.7 | 2.30 | 2.6 | 2.20 |
| | 12 | 3.3 | 5.35 | 3.0 | 4.45 | 2.8 | 4.20 | 2.6 | 3.90 | 2.2 | 3.20 | 1.8 | 2.60 | 2.9 | 2.50 |
| | 15 | 3.8 | 6.75 | 3.2 | 5.60 | 3.0 | 4.85 | 2.8 | 4.10 | 2.4 | 3.45 | 1.9 | 2.90 | 3.1 | 2.75 |
| | 20 | 4.2 | 7.45 | 3.7 | 6.55 | 3.4 | 5.65 | 3.1 | 4.75 | 2.9 | 3.90 | 2.6 | 3.30 | 3.5 | 3.25 |

## ■ PUD-SHWM100VAA(-BS) PUD-SHWM100YAA(-BS)

| Water outlet temperature[°C] | | 25 | | 35 | | 40 | | 45 | | 50 | | 55 | | 60 | |
|---|---|---|---|---|---|---|---|---|---|---|---|---|---|---|---|
| Ambient temperature[°C] | | Capacity | COP | Capacity | COP | Capacity | COP | Capacity | COP | Capacity | COP | Capacity | COP | Capacity | COP |
| Max | -28 INJ | - | - | 8.0 | 2.00 | 7.9 | 1.80 | 7.7 | 1.57 | - | - | - | - | - | - |
| | -20 INJ | - | - | 9.4 | 2.15 | 9.2 | 1.95 | 9.0 | 1.75 | 8.6 | 1.55 | - | - | - | - |
| | -15 INJ | - | - | 10.7 | 2.50 | 10.5 | 2.20 | 10.3 | 1.90 | 10.0 | 1.85 | 9.2 | 1.60 | - | - |
| | -10 INJ | 12.6 | 2.80 | 12.0 | 2.60 | 11.7 | 2.45 | 11.4 | 2.25 | 11.0 | 2.00 | 10.0 | 1.91 | - | - |
| | -7 INJ | 13.5 | 2.90 | 13.2 | 2.65 | 12.9 | 2.45 | 12.6 | 2.25 | 12.2 | 2.10 | 10.9 | 1.95 | 9.2 | 1.65 |
| | 2 | 12.8 | 3.45 | 12.4 | 3.15 | 12.2 | 2.90 | 11.9 | 2.60 | 11.4 | 2.30 | 10.4 | 2.00 | 9.4 | 1.85 |
| | 7 | 11.4 | 5.50 | 10.9 | 4.65 | 10.5 | 4.05 | 10.0 | 3.40 | 9.7 | 3.10 | 9.2 | 2.55 | 8.5 | 2.25 |
| | 12 | 12.9 | 6.30 | 12.2 | 5.45 | 12.0 | 4.75 | 11.7 | 4.00 | 11.1 | 3.50 | 10.5 | 2.95 | 9.5 | 2.55 |
| | 15 | 13.4 | 6.70 | 13.0 | 5.65 | 12.7 | 5.10 | 12.4 | 4.50 | 11.8 | 4.10 | 11.1 | 3.55 | 10.0 | 2.90 |
| | 20 | 14.2 | 7.60 | 13.8 | 6.25 | 13.5 | 5.65 | 13.1 | 5.00 | 12.5 | 4.35 | 11.4 | 3.75 | 10.5 | 3.55 |
| Nominal | -28 INJ | - | - | 8.0 | 2.00 | 7.9 | 1.80 | 7.7 | 1.57 | - | - | - | - | - | - |
| | -20 INJ | - | - | 9.4 | 2.15 | 9.2 | 1.95 | 9.0 | 1.75 | 8.6 | 1.55 | - | - | - | - |
| | -15 INJ | - | - | 10.0 | 2.60 | 10.0 | 2.30 | 10.0 | 1.95 | 10.0 | 1.85 | 9.2 | 1.60 | - | - |
| | -10 INJ | 10.0 | 3.45 | 10.0 | 2.92 | 10.0 | 2.65 | 10.0 | 2.40 | 10.0 | 2.10 | 10.0 | 1.91 | - | - |
| | -7 INJ | 10.0 | 3.50 | 10.0 | 3.05 | 10.0 | 2.75 | 10.0 | 2.45 | 10.0 | 2.25 | 10.0 | 2.00 | 9.2 | 1.65 |
| | 2 | 10.0 | 4.10 | 10.0 | 3.45 | 10.0 | 3.10 | 10.0 | 2.75 | 10.0 | 2.45 | 10.0 | 2.05 | 9.4 | 1.85 |
| | 7 | 8.0 | 5.90 | 8.0 | 5.00 | 8.0 | 4.35 | 8.0 | 3.65 | 8.0 | 3.20 | 8.0 | 2.60 | 8.0 | 2.30 |
| | 12 | 8.0 | 7.20 | 8.0 | 5.90 | 8.0 | 5.10 | 8.0 | 4.30 | 8.0 | 3.75 | 8.0 | 3.10 | 8.0 | 2.65 |
| | 15 | 8.0 | 7.55 | 8.0 | 6.20 | 8.0 | 5.50 | 8.0 | 4.80 | 8.0 | 4.25 | 8.0 | 3.65 | 8.0 | 2.95 |
| | 20 | 8.0 | 8.65 | 8.0 | 7.10 | 8.0 | 6.25 | 8.0 | 5.40 | 8.0 | 4.65 | 8.0 | 3.85 | 8.0 | 3.75 |
| Mid | -28 INJ | - | - | 6.4 | 2.05 | 6.3 | 1.85 | 6.2 | 1.60 | - | - | - | - | - | - |
| | -20 INJ | - | - | 7.2 | 2.35 | 7.2 | 2.10 | 7.2 | 1.80 | 6.9 | 1.60 | - | - | - | - |
| | -15 INJ | - | - | 8.0 | 2.65 | 8.0 | 2.35 | 8.0 | 2.00 | 8.0 | 1.90 | 7.4 | 1.70 | - | - |
| | -10 INJ | 8.0 | 3.70 | 8.0 | 3.10 | 8.0 | 2.80 | 8.0 | 2.50 | 8.0 | 2.20 | 8.0 | 1.85 | - | - |
| | -7 | 8.0 | 3.70 | 8.0 | 3.15 | 8.0 | 2.85 | 8.0 | 2.50 | 8.0 | 2.30 | 8.0 | 2.05 | 7.4 | 1.75 |
| | 2 | 8.0 | 4.45 | 8.0 | 3.60 | 8.0 | 3.25 | 8.0 | 2.85 | 8.0 | 2.55 | 8.0 | 2.15 | 7.5 | 1.95 |
| | 7 | 6.4 | 5.80 | 6.4 | 5.00 | 6.4 | 4.35 | 6.4 | 3.70 | 6.4 | 3.25 | 6.4 | 2.75 | 6.4 | 2.35 |
| | 12 | 6.4 | 7.30 | 6.4 | 5.65 | 6.4 | 5.00 | 6.4 | 4.30 | 6.4 | 3.75 | 6.4 | 3.10 | 6.4 | 2.70 |
| | 15 | 6.4 | 7.55 | 6.4 | 6.15 | 6.4 | 5.45 | 6.4 | 4.70 | 6.4 | 4.15 | 6.4 | 3.60 | 6.4 | 2.95 |
| | 20 | 6.4 | 8.35 | 6.4 | 7.05 | 6.4 | 6.20 | 6.4 | 5.30 | 6.4 | 4.60 | 6.4 | 3.80 | 6.4 | 3.70 |
| Min | -28 | - | - | 4.0 | 1.90 | 3.9 | 1.70 | 3.8 | 1.50 | - | - | - | - | - | - |
| | -20 | - | - | 4.9 | 2.40 | 4.8 | 2.15 | 4.7 | 1.85 | 4.5 | 1.55 | - | - | - | - |
| | -15 | - | - | 5.6 | 2.70 | 5.5 | 2.40 | 5.4 | 2.05 | 5.3 | 1.85 | 5.2 | 1.55 | - | - |
| | -10 | 3.8 | 3.60 | 3.6 | 2.90 | 3.5 | 2.60 | 3.4 | 2.25 | 3.3 | 1.90 | 3.1 | 1.60 | - | - |
| | -7 | 3.8 | 3.70 | 3.5 | 2.90 | 3.4 | 2.60 | 3.2 | 2.25 | 3.1 | 2.00 | 2.9 | 1.70 | 3.7 | 1.65 |
| | 2 | 3.5 | 4.70 | 3.2 | 3.60 | 3.0 | 3.20 | 2.7 | 2.75 | 2.4 | 2.30 | 2.1 | 1.80 | 3.2 | 1.90 |
| | 7 | 2.7 | 4.90 | 2.5 | 3.55 | 2.4 | 3.35 | 2.3 | 3.10 | 2.0 | 2.70 | 1.7 | 2.30 | 2.6 | 2.25 |
| | 12 | 3.4 | 6.90 | 3.1 | 4.55 | 2.9 | 4.25 | 2.7 | 3.95 | 2.3 | 3.25 | 1.9 | 2.65 | 2.9 | 2.55 |
| | 15 | 4.0 | 7.30 | 3.3 | 5.70 | 3.1 | 4.95 | 2.9 | 4.20 | 2.5 | 3.60 | 2.0 | 3.00 | 3.1 | 2.75 |
| | 20 | 4.3 | 7.60 | 3.8 | 6.65 | 3.5 | 5.75 | 3.2 | 4.85 | 2.9 | 4.10 | 2.6 | 3.30 | 3.5 | 3.35 |

## ■ PUD-SHWM120VAA(-BS) PUD-SHWM120YAA(-BS)

| Water outlet temperature[°C] | | 25 | | 35 | | 40 | | 45 | | 50 | | 55 | | 60 | |
|---|---|---|---|---|---|---|---|---|---|---|---|---|---|---|---|
| Ambient temperature[°C] | | Capacity | COP | Capacity | COP | Capacity | COP | Capacity | COP | Capacity | COP | Capacity | COP | Capacity | COP |
| Max | -28 INJ | - | - | 9.6 | 1.95 | 9.4 | 1.75 | 9.2 | 1.56 | - | - | - | - | - | - |
| | -20 INJ | - | - | 11.0 | 2.00 | 10.9 | 1.90 | 10.8 | 1.75 | 9.6 | 1.55 | - | - | - | - |
| | -15 INJ | - | - | 12.3 | 2.35 | 12.2 | 2.10 | 12.0 | 1.85 | 11.6 | 1.80 | 11.2 | 1.76 | - | - |
| | -10 INJ | 14.0 | 2.40 | 13.6 | 2.35 | 13.2 | 2.20 | 12.8 | 2.00 | 12.4 | 1.90 | 12.0 | 1.87 | - | - |
| | -7 INJ | 15.2 | 2.60 | 14.9 | 2.40 | 14.5 | 2.25 | 14.1 | 2.10 | 13.3 | 2.00 | 12.4 | 1.85 | 10.0 | 1.60 |
| | 2 | 13.5 | 3.30 | 13.2 | 3.10 | 12.9 | 2.85 | 12.6 | 2.55 | 12.3 | 2.25 | 12.0 | 2.03 | 11.0 | 1.80 |
| | 7 | 13.2 | 4.90 | 12.9 | 4.10 | 12.5 | 3.60 | 12.1 | 3.10 | 11.7 | 2.85 | 11.2 | 2.55 | 10.5 | 2.20 |
| | 12 | 15.0 | 5.40 | 14.5 | 4.55 | 14.2 | 4.10 | 13.8 | 3.60 | 13.2 | 3.10 | 12.6 | 2.65 | 11.7 | 2.30 |
| | 15 | 15.9 | 5.90 | 15.4 | 5.00 | 15.1 | 4.60 | 14.7 | 4.15 | 14.0 | 3.75 | 13.3 | 3.30 | 12.4 | 2.65 |
| | 20 | 16.9 | 6.10 | 16.4 | 5.30 | 16.2 | 4.85 | 15.9 | 4.40 | 15.2 | 3.90 | 14.5 | 3.40 | 13.5 | 3.00 |
| Nominal | -28 INJ | - | - | 9.6 | 1.95 | 9.4 | 1.75 | 9.2 | 1.56 | - | - | - | - | - | - |
| | -20 INJ | - | - | 11.0 | 2.00 | 10.9 | 1.90 | 10.8 | 1.75 | 9.6 | 1.55 | - | - | - | - |
| | -15 INJ | - | - | 12.0 | 2.45 | 12.0 | 2.15 | 12.0 | 1.85 | 11.6 | 1.80 | 11.2 | 1.76 | - | - |
| | -10 INJ | 12.0 | 3.20 | 12.0 | 2.77 | 12.0 | 2.50 | 12.0 | 2.20 | 12.0 | 1.95 | 12.0 | 1.87 | - | - |
| | -7 INJ | 12.0 | 3.30 | 12.0 | 2.85 | 12.0 | 2.60 | 12.0 | 2.35 | 12.0 | 2.15 | 12.0 | 1.95 | 10.0 | 1.60 |
| | 2 | 12.0 | 3.55 | 12.0 | 3.30 | 12.0 | 2.95 | 12.0 | 2.60 | 12.0 | 2.30 | 12.0 | 2.03 | 11.0 | 1.80 |
| | 7 | 10.0 | 5.75 | 10.0 | 4.80 | 10.0 | 4.10 | 10.0 | 3.40 | 10.0 | 3.05 | 10.0 | 2.65 | 10.0 | 2.25 |
| | 12 | 10.0 | 7.15 | 10.0 | 5.80 | 10.0 | 5.00 | 10.0 | 4.20 | 10.0 | 3.65 | 10.0 | 3.00 | 10.0 | 2.50 |
| | 15 | 10.0 | 7.45 | 10.0 | 6.15 | 10.0 | 5.45 | 10.0 | 4.75 | 10.0 | 4.20 | 10.0 | 3.60 | 10.0 | 2.90 |
| | 20 | 10.0 | 8.65 | 10.0 | 7.00 | 10.0 | 6.20 | 10.0 | 5.35 | 10.0 | 4.60 | 10.0 | 3.80 | 10.0 | 3.60 |
| Mid | -28 INJ | - | - | 7.7 | 2.05 | 7.6 | 1.85 | 7.4 | 1.60 | - | - | - | - | - | - |
| | -20 INJ | - | - | 8.8 | 2.25 | 8.7 | 2.05 | 8.6 | 1.80 | 7.8 | 1.60 | - | - | - | - |
| | -15 INJ | - | - | 9.6 | 2.55 | 9.6 | 2.25 | 9.6 | 1.95 | 9.3 | 1.90 | 9.0 | 1.80 | - | - |
| | -10 INJ | 9.6 | 3.50 | 9.6 | 3.00 | 9.6 | 2.70 | 9.6 | 2.40 | 9.6 | 2.15 | 9.6 | 1.90 | - | - |
| | -7 INJ | 9.6 | 3.60 | 9.6 | 3.10 | 9.6 | 2.80 | 9.6 | 2.45 | 9.6 | 2.25 | 9.6 | 2.05 | 8.0 | 1.70 |
| | 2 | 9.6 | 4.25 | 9.6 | 3.50 | 9.6 | 3.15 | 9.6 | 2.80 | 9.6 | 2.50 | 9.6 | 2.15 | 8.6 | 1.90 |
| | 7 | 8.0 | 5.90 | 8.0 | 5.00 | 8.0 | 4.35 | 8.0 | 3.65 | 8.0 | 3.20 | 8.0 | 2.70 | 8.0 | 2.30 |
| | 12 | 8.0 | 7.20 | 8.0 | 5.90 | 8.0 | 5.10 | 8.0 | 4.30 | 8.0 | 3.75 | 8.0 | 3.10 | 8.0 | 2.65 |
| | 15 | 8.0 | 7.55 | 8.0 | 6.20 | 8.0 | 5.50 | 8.0 | 4.80 | 8.0 | 4.25 | 8.0 | 3.65 | 8.0 | 2.95 |
| | 20 | 8.0 | 8.70 | 8.0 | 7.10 | 8.0 | 6.25 | 8.0 | 5.40 | 8.0 | 4.65 | 8.0 | 3.85 | 8.0 | 3.75 |
| Min | -28 | - | - | 4.0 | 1.90 | 3.9 | 1.70 | 3.8 | 1.50 | - | - | - | - | - | - |
| | -20 | - | - | 4.9 | 2.40 | 4.8 | 2.15 | 4.7 | 1.85 | 4.5 | 1.55 | - | - | - | - |
| | -15 | - | - | 5.6 | 2.70 | 5.5 | 2.40 | 5.4 | 2.05 | 5.3 | 1.85 | 5.2 | 1.55 | - | - |
| | -10 | 3.8 | 3.60 | 3.6 | 2.90 | 3.5 | 2.60 | 3.4 | 2.25 | 3.3 | 1.90 | 3.1 | 1.60 | - | - |
| | -7 | 3.8 | 3.70 | 3.5 | 2.90 | 3.4 | 2.60 | 3.2 | 2.25 | 3.1 | 2.00 | 2.9 | 1.70 | 3.7 | 1.65 |
| | 2 | 3.5 | 4.70 | 3.2 | 3.60 | 3.0 | 3.20 | 2.7 | 2.75 | 2.4 | 2.30 | 2.1 | 1.80 | 3.2 | 1.90 |
| | 7 | 2.7 | 4.90 | 2.5 | 3.55 | 2.4 | 3.35 | 2.3 | 3.10 | 2.0 | 2.70 | 1.7 | 2.30 | 2.6 | 2.25 |
| | 12 | 3.4 | 6.90 | 3.1 | 4.55 | 2.9 | 4.25 | 2.7 | 3.95 | 2.3 | 3.35 | 1.9 | 2.70 | 2.9 | 2.60 |
| | 15 | 4.0 | 7.30 | 3.3 | 5.70 | 3.1 | 4.95 | 2.9 | 4.20 | 2.5 | 3.60 | 2.0 | 3.00 | 3.1 | 2.75 |
| | 20 | 4.3 | 7.60 | 3.8 | 6.65 | 3.5 | 5.75 | 3.2 | 4.85 | 2.9 | 4.10 | 2.6 | 3.30 | 3.5 | 3.35 |

## ■ PUD-SHWM140VAA(-BS) PUD-SHWM140YAA(-BS)

| Water outlet temperature[°C] | | 25 | | 35 | | 40 | | 45 | | 50 | | 55 | | 60 | |
|---|---|---|---|---|---|---|---|---|---|---|---|---|---|---|---|
| Ambient temperature[°C] | | Capacity | COP | Capacity | COP | Capacity | COP | Capacity | COP | Capacity | COP | Capacity | COP | Capacity | COP |
| Max | -28 INJ | - | - | 9.8 | 1.90 | 9.7 | 1.75 | 9.6 | 1.55 | - | - | - | - | - | - |
| | -20 INJ | - | - | 11.8 | 2.00 | 11.7 | 1.85 | 11.5 | 1.70 | 11.0 | 1.50 | - | - | - | - |
| | -15 INJ | - | - | 14.2 | 2.10 | 14.1 | 2.00 | 14.0 | 1.85 | 12.9 | 1.75 | 11.7 | 1.70 | - | - |
| | -10 INJ | 15.5 | 2.10 | 14.9 | 2.20 | 14.8 | 2.10 | 14.6 | 1.95 | 14.5 | 1.85 | 14.3 | 1.80 | - | - |
| | -7 INJ | 16.2 | 2.20 | 15.8 | 2.20 | 15.6 | 2.15 | 15.4 | 2.05 | 15.3 | 1.95 | 15.2 | 1.80 | 11.0 | 1.50 |
| | 2 | 15.6 | 2.90 | 14.6 | 2.90 | 14.5 | 2.60 | 14.3 | 2.30 | 14.2 | 2.10 | 14.0 | 1.95 | 12.0 | 1.65 |
| | 7 | 15.4 | 4.10 | 14.4 | 3.50 | 14.2 | 3.25 | 13.9 | 2.95 | 13.3 | 2.60 | 12.6 | 2.40 | 11.0 | 2.10 |
| | 12 | 16.3 | 5.00 | 15.4 | 4.20 | 15.1 | 3.75 | 14.8 | 3.25 | 14.2 | 2.85 | 13.6 | 2.45 | 12.4 | 2.20 |
| | 15 | 16.7 | 5.50 | 15.8 | 4.85 | 15.5 | 4.45 | 15.2 | 4.00 | 14.6 | 3.50 | 14.0 | 3.00 | 12.8 | 2.60 |
| | 20 | 17.9 | 5.30 | 17.0 | 5.00 | 16.7 | 4.60 | 16.4 | 4.20 | 15.7 | 3.80 | 15.0 | 3.35 | 13.8 | 2.90 |
| Nominal | -28 INJ | - | - | 9.8 | 1.90 | 9.7 | 1.75 | 9.6 | 1.55 | - | - | - | - | - | - |
| | -20 INJ | - | - | 11.8 | 2.00 | 11.7 | 1.85 | 11.5 | 1.70 | 11.3 | 1.45 | - | - | - | - |
| | -15 INJ | - | - | 14.0 | 2.15 | 14.0 | 2.00 | 14.0 | 1.85 | 12.9 | 1.75 | 11.7 | 1.70 | - | - |
| | -10 INJ | 14.0 | 2.60 | 14.0 | 2.69 | 14.0 | 2.35 | 14.0 | 2.00 | 14.0 | 1.85 | 14.0 | 1.80 | - | - |
| | -7 INJ | 14.0 | 2.95 | 14.0 | 2.70 | 14.0 | 2.45 | 14.0 | 2.20 | 14.0 | 1.95 | 14.0 | 1.87 | 11.0 | 1.50 |
| | 2 | 14.0 | 3.15 | 14.0 | 3.05 | 14.0 | 2.70 | 14.0 | 2.35 | 14.0 | 2.15 | 14.0 | 1.95 | 12.0 | 1.65 |
| | 7 | 12.0 | 5.50 | 12.0 | 4.70 | 12.0 | 3.95 | 12.0 | 3.20 | 12.0 | 2.80 | 12.0 | 2.45 | 11.0 | 2.10 |
| | 12 | 12.0 | 6.60 | 12.0 | 5.55 | 12.0 | 4.80 | 12.0 | 4.00 | 12.0 | 3.40 | 12.0 | 2.80 | 12.0 | 2.30 |
| | 15 | 12.0 | 7.20 | 12.0 | 5.90 | 12.0 | 5.25 | 12.0 | 4.60 | 12.0 | 4.05 | 12.0 | 3.45 | 12.0 | 2.75 |
| | 20 | 12.0 | 8.40 | 12.0 | 6.70 | 12.0 | 5.95 | 12.0 | 5.20 | 12.0 | 4.45 | 12.0 | 3.70 | 12.0 | 3.35 |
| Mid | -28 INJ | - | - | 7.8 | 2.05 | 7.8 | 1.85 | 7.7 | 1.60 | - | - | - | - | - | - |
| | -20 INJ | - | - | 9.4 | 2.20 | 9.3 | 2.00 | 9.2 | 1.80 | 9.0 | 1.60 | - | - | - | - |
| | -15 INJ | - | - | 11.2 | 2.45 | 11.2 | 2.20 | 11.2 | 1.90 | 10.3 | 1.90 | 9.4 | 1.80 | - | - |
| | -10 INJ | 11.2 | 3.35 | 11.2 | 2.90 | 11.2 | 2.60 | 11.2 | 2.30 | 11.2 | 2.05 | 11.2 | 1.90 | - | - |
| | -7 INJ | 11.2 | 3.45 | 11.2 | 3.05 | 11.2 | 2.75 | 11.2 | 2.40 | 11.2 | 2.20 | 11.2 | 2.00 | 8.8 | 1.65 |
| | 2 | 11.2 | 3.90 | 11.2 | 3.40 | 11.2 | 3.05 | 11.2 | 2.70 | 11.2 | 2.40 | 11.2 | 2.10 | 9.6 | 1.85 |
| | 7 | 9.6 | 6.00 | 9.6 | 4.90 | 9.6 | 4.25 | 9.6 | 3.55 | 9.6 | 3.10 | 9.6 | 2.60 | 8.8 | 2.30 |
| | 12 | 9.6 | 7.10 | 9.6 | 5.95 | 9.6 | 5.15 | 9.6 | 4.30 | 9.6 | 3.65 | 9.6 | 3.00 | 9.6 | 2.55 |
| | 15 | 9.6 | 7.50 | 9.6 | 6.20 | 9.6 | 5.50 | 9.6 | 4.80 | 9.6 | 4.25 | 9.6 | 3.65 | 9.6 | 2.90 |
| | 20 | 9.6 | 8.75 | 9.6 | 7.10 | 9.6 | 6.25 | 9.6 | 5.40 | 9.6 | 4.60 | 9.6 | 3.80 | 9.6 | 3.70 |
| Min | -28 | - | - | 4.2 | 1.90 | 4.1 | 1.70 | 4.0 | 1.50 | - | - | - | - | - | - |
| | -20 | - | - | 5.1 | 2.40 | 5.0 | 2.15 | 4.9 | 1.85 | 4.7 | 1.55 | - | - | - | - |
| | -15 | - | - | 5.8 | 2.70 | 5.7 | 2.40 | 5.6 | 2.05 | 5.5 | 1.85 | 5.4 | 1.60 | - | - |
| | -10 | 4.0 | 3.60 | 3.8 | 2.90 | 3.7 | 2.60 | 3.6 | 2.25 | 3.5 | 1.95 | 3.3 | 1.65 | - | - |
| | -7 | 4.2 | 3.75 | 3.9 | 3.00 | 3.8 | 2.65 | 3.7 | 2.30 | 3.5 | 2.05 | 3.2 | 1.75 | 3.9 | 1.65 |
| | 2 | 3.9 | 4.70 | 3.5 | 3.65 | 3.4 | 3.25 | 3.2 | 2.80 | 3.0 | 2.35 | 2.7 | 1.90 | 3.5 | 1.90 |
| | 7 | 3.9 | 5.80 | 3.5 | 4.20 | 3.4 | 3.75 | 3.2 | 3.30 | 3.0 | 2.90 | 2.7 | 2.45 | 3.4 | 2.25 |
| | 12 | 4.2 | 7.10 | 3.9 | 5.10 | 3.7 | 4.60 | 3.5 | 4.10 | 3.3 | 3.50 | 3.0 | 2.85 | 3.8 | 2.65 |
| | 15 | 4.4 | 7.40 | 4.3 | 6.00 | 4.2 | 5.25 | 4.1 | 4.45 | 3.9 | 3.90 | 3.6 | 3.30 | 4.0 | 2.85 |
| | 20 | 5.2 | 8.00 | 4.8 | 6.85 | 4.6 | 6.00 | 4.4 | 5.10 | 4.2 | 4.40 | 4.0 | 3.65 | 4.4 | 3.50 |

## ■ PXZ-4F75VG

| Water outlet temperature[°C] | | 25 | | 35 | | 40 | | 45 | | 50 | | 55 | | 60 | |
|---|---|---|---|---|---|---|---|---|---|---|---|---|---|---|---|
| Ambient temperature[°C] | | Capacity | COP | Capacity | COP | Capacity | COP | Capacity | COP | Capacity | COP | Capacity | COP | Capacity | COP |
| Max | -20 | - | - | 4.1 | 1.68 | 4.0 | 1.43 | - | - | - | - | - | - | - | - |
| | -15 | - | - | 4.8 | 1.96 | 4.7 | 1.78 | 4.6 | 1.55 | - | - | - | - | - | - |
| | -10 | 5.7 | 2.98 | 5.5 | 2.23 | 5.4 | 2.03 | 5.3 | 1.77 | 5.2 | 1.54 | - | - | - | - |
| | -7 | 6.2 | 3.20 | 6.0 | 2.40 | 5.8 | 2.18 | 5.7 | 1.90 | 5.6 | 1.66 | - | - | - | - |
| | 2 | 7.0 | 3.74 | 6.8 | 2.80 | 6.7 | 2.59 | 6.6 | 2.37 | 6.4 | 2.16 | 6.3 | 1.94 | - | - |
| | 7 | 9.6 | 4.77 | 9.3 | 3.57 | 9.1 | 3.25 | 8.9 | 2.84 | 8.8 | 2.47 | 8.7 | 2.14 | - | - |
| | 12 | 10.4 | 5.13 | 10.2 | 3.90 | 10.0 | 3.61 | 9.9 | 3.15 | 9.7 | 2.73 | 9.5 | 2.37 | - | - |
| | 15 | 11.0 | 5.36 | 10.8 | 4.04 | 10.6 | 3.81 | 10.5 | 3.34 | 10.3 | 2.91 | 10.1 | 2.52 | - | - |
| | 20 | 12.1 | 5.65 | 12.0 | 4.28 | 11.8 | 4.07 | 11.6 | 3.61 | 11.4 | 3.18 | 11.3 | 2.80 | - | - |
| Nominal | -20 | - | - | 4.1 | 1.68 | 4.0 | 1.43 | - | - | - | - | - | - | - | - |
| | -15 | - | - | 4.8 | 1.96 | 4.7 | 1.78 | 4.6 | 1.55 | - | - | - | - | - | - |
| | -10 | 5.7 | 2.98 | 5.5 | 2.23 | 5.4 | 2.03 | 5.3 | 1.77 | 5.2 | 1.54 | - | - | - | - |
| | -7 | 6.2 | 3.20 | 6.0 | 2.40 | 5.8 | 2.18 | 5.7 | 1.90 | 5.6 | 1.66 | - | - | - | - |
| | 2 | 7.0 | 3.74 | 6.8 | 2.80 | 6.7 | 2.59 | 6.6 | 2.37 | 6.4 | 2.16 | 6.3 | 1.94 | - | - |
| | 7 | 7.8 | 5.56 | 7.5 | 4.17 | 7.5 | 3.74 | 7.5 | 3.32 | 7.5 | 2.89 | 7.5 | 2.46 | - | - |
| | 12 | 7.8 | 6.12 | 7.5 | 4.65 | 7.5 | 4.18 | 7.5 | 3.72 | 7.5 | 3.25 | 7.5 | 2.78 | - | - |
| | 15 | 7.1 | 6.62 | 7.5 | 5.00 | 7.5 | 4.54 | 7.5 | 4.08 | 7.5 | 3.62 | 7.5 | 3.16 | - | - |
| | 20 | 6.7 | 8.05 | 7.5 | 6.10 | 7.5 | 5.50 | 7.5 | 4.91 | 7.5 | 4.31 | 7.5 | 3.72 | - | - |
| Mid | -20 | - | - | 3.3 | 1.83 | 3.2 | 1.56 | - | - | - | - | - | - | - | - |
| | -15 | - | - | 3.8 | 2.13 | 3.8 | 1.94 | 3.7 | 1.70 | - | - | - | - | - | - |
| | -10 | 4.6 | 3.25 | 4.4 | 2.43 | 4.3 | 2.22 | 4.3 | 1.93 | 4.2 | 1.68 | - | - | - | - |
| | -7 | 4.9 | 3.49 | 4.8 | 2.61 | 4.7 | 2.38 | 4.6 | 2.08 | 4.5 | 1.81 | - | - | - | - |
| | 2 | 5.6 | 4.20 | 5.4 | 3.15 | 5.3 | 2.91 | 5.2 | 2.67 | 5.1 | 2.43 | 5.0 | 2.18 | - | - |
| | 7 | 6.2 | 5.76 | 6.0 | 4.31 | 6.0 | 3.87 | 6.0 | 3.43 | 6.0 | 2.99 | 6.0 | 2.55 | - | - |
| | 12 | 6.2 | 6.23 | 6.0 | 4.74 | 6.0 | 4.26 | 6.0 | 3.79 | 6.0 | 3.31 | 6.0 | 2.83 | - | - |
| | 15 | 5.7 | 7.04 | 6.0 | 5.32 | 6.0 | 4.83 | 6.0 | 4.34 | 6.0 | 3.85 | 6.0 | 3.36 | - | - |
| | 20 | 5.3 | 7.91 | 6.0 | 5.99 | 6.0 | 5.41 | 6.0 | 4.82 | 6.0 | 4.24 | 6.0 | 3.65 | - | - |
| Min | -20 | - | - | 2.9 | 1.82 | 2.8 | 1.54 | - | - | - | - | - | - | - | - |
| | -15 | - | - | 3.7 | 2.18 | 3.6 | 1.98 | 3.6 | 1.73 | - | - | - | - | - | - |
| | -10 | 3.5 | 3.45 | 3.4 | 2.59 | 3.3 | 2.36 | 3.2 | 2.06 | 3.2 | 1.79 | - | - | - | - |
| | -7 | 3.9 | 3.56 | 3.7 | 2.67 | 3.7 | 2.43 | 3.6 | 2.12 | 3.5 | 1.84 | - | - | - | - |
| | 2 | 3.0 | 4.13 | 2.9 | 3.10 | 2.8 | 2.86 | 2.8 | 2.62 | 2.7 | 2.39 | 2.7 | 2.15 | - | - |
| | 7 | 4.4 | 5.55 | 4.3 | 4.16 | 4.2 | 3.79 | 4.1 | 3.31 | 4.1 | 2.88 | 4.0 | 2.50 | - | - |
| | 12 | 5.0 | 6.32 | 4.9 | 4.81 | 4.8 | 4.44 | 4.7 | 3.88 | 4.7 | 3.37 | 4.6 | 2.92 | - | - |
| | 15 | 5.5 | 6.98 | 5.4 | 5.27 | 5.3 | 4.97 | 5.3 | 4.35 | 5.2 | 3.79 | 5.1 | 3.29 | - | - |
| | 20 | 5.9 | 7.86 | 5.8 | 5.95 | 5.7 | 5.66 | 5.6 | 5.02 | 5.6 | 4.42 | 5.5 | 3.89 | - | - |

## ■ PXZ-5F85VG

| Water outlet temperature[°C] | | 25 | | 35 | | 40 | | 45 | | 50 | | 55 | | 60 | |
|---|---|---|---|---|---|---|---|---|---|---|---|---|---|---|---|
| Ambient temperature[°C] | | Capacity | COP | Capacity | COP | Capacity | COP | Capacity | COP | Capacity | COP | Capacity | COP | Capacity | COP |
| Max | -20 | - | - | 5.2 | 1.74 | 5.1 | 1.56 | - | - | - | - | - | - | - | - |
| | -15 | - | - | 6.1 | 1.97 | 6.0 | 1.76 | 5.8 | 1.58 | - | - | - | - | - | - |
| | -10 | 7.5 | 2.74 | 7.1 | 2.20 | 6.9 | 1.97 | 6.8 | 1.76 | 5.5 | 1.32 | - | - | - | - |
| | -7 | 8.1 | 2.91 | 7.7 | 2.34 | 7.1 | 2.03 | 6.5 | 1.71 | 5.9 | 1.40 | - | - | - | - |
| | 2 | 8.2 | 3.73 | 7.8 | 3.00 | 7.6 | 2.71 | 7.5 | 2.42 | 7.3 | 2.13 | 7.1 | 1.84 | - | - |
| | 7 | 10.5 | 4.96 | 10.0 | 3.99 | 9.8 | 3.57 | 9.5 | 3.20 | 8.7 | 2.87 | 8.6 | 2.57 | - | - |
| | 12 | 11.5 | 5.42 | 10.9 | 4.33 | 10.6 | 3.87 | 10.4 | 3.45 | 9.5 | 3.08 | 9.4 | 2.75 | - | - |
| | 15 | 12.1 | 5.74 | 11.5 | 4.56 | 11.2 | 4.06 | 11.0 | 3.61 | 10.0 | 3.23 | 9.9 | 2.89 | - | - |
| | 20 | 13.3 | 6.35 | 12.7 | 4.99 | 12.4 | 4.43 | 12.1 | 3.95 | 11.2 | 3.53 | 11.1 | 3.17 | - | - |
| Nominal | -20 | - | - | 5.2 | 1.74 | 5.1 | 1.56 | - | - | - | - | - | - | - | - |
| | -15 | - | - | 6.1 | 1.97 | 6.0 | 1.76 | 5.8 | 1.58 | - | - | - | - | - | - |
| | -10 | 7.5 | 2.74 | 7.1 | 2.20 | 6.9 | 1.97 | 6.8 | 1.76 | 5.5 | 1.32 | - | - | - | - |
| | -7 | 8.1 | 2.91 | 7.7 | 2.34 | 7.1 | 2.03 | 6.5 | 1.71 | 5.9 | 1.40 | - | - | - | - |
| | 2 | 8.2 | 3.73 | 7.8 | 3.00 | 7.6 | 2.71 | 7.5 | 2.42 | 7.3 | 2.13 | 7.1 | 1.84 | - | - |
| | 7 | 8.9 | 5.40 | 8.5 | 4.34 | 8.5 | 3.91 | 8.5 | 3.48 | 8.5 | 3.04 | 8.5 | 2.61 | - | - |
| | 12 | 8.9 | 6.09 | 8.5 | 4.87 | 8.5 | 4.37 | 8.5 | 3.87 | 8.5 | 3.36 | 8.5 | 2.86 | - | - |
| | 15 | 8.9 | 6.69 | 8.5 | 5.32 | 8.5 | 4.76 | 8.5 | 4.21 | 8.5 | 3.65 | 8.5 | 3.10 | - | - |
| | 20 | 8.9 | 7.98 | 8.5 | 6.27 | 8.5 | 5.58 | 8.5 | 4.90 | 8.5 | 4.21 | 8.5 | 3.53 | - | - |
| Mid | -20 | - | - | 4.1 | 1.80 | 4.0 | 1.61 | - | - | - | - | - | - | - | - |
| | -15 | - | - | 4.9 | 2.04 | 4.8 | 1.83 | 4.7 | 1.64 | - | - | - | - | - | - |
| | -10 | 6.0 | 2.84 | 5.7 | 2.28 | 5.5 | 2.04 | 5.4 | 1.83 | 4.4 | 1.37 | - | - | - | - |
| | -7 | 6.5 | 3.02 | 6.1 | 2.43 | 5.7 | 2.10 | 5.2 | 1.78 | 4.7 | 1.45 | - | - | - | - |
| | 2 | 6.6 | 4.04 | 6.2 | 3.25 | 6.1 | 2.93 | 6.0 | 2.62 | 5.8 | 2.30 | 5.7 | 1.99 | - | - |
| | 7 | 7.2 | 5.64 | 6.8 | 4.53 | 6.8 | 4.08 | 6.8 | 3.63 | 6.8 | 3.18 | 6.8 | 2.73 | - | - |
| | 12 | 7.2 | 6.34 | 6.8 | 5.07 | 6.8 | 4.55 | 6.8 | 4.03 | 6.8 | 3.51 | 6.8 | 2.98 | - | - |
| | 15 | 7.2 | 7.01 | 6.8 | 5.57 | 6.8 | 4.99 | 6.8 | 4.41 | 6.8 | 3.83 | 6.8 | 3.25 | - | - |
| | 20 | 7.1 | 8.25 | 6.8 | 6.48 | 6.8 | 5.77 | 6.8 | 5.06 | 6.8 | 4.35 | 6.8 | 3.65 | - | - |
| Min | -20 | - | - | 3.7 | 1.73 | 3.6 | 1.55 | - | - | - | - | - | - | - | - |
| | -15 | - | - | 4.3 | 2.05 | 4.2 | 1.84 | 4.1 | 1.65 | - | - | - | - | - | - |
| | -10 | 3.9 | 2.84 | 3.7 | 2.29 | 3.6 | 2.05 | 3.5 | 1.83 | 2.9 | 1.37 | - | - | - | - |
| | -7 | 4.3 | 3.11 | 4.1 | 2.50 | 3.8 | 2.17 | 3.4 | 1.83 | 3.1 | 1.50 | - | - | - | - |
| | 2 | 3.5 | 3.90 | 3.3 | 3.14 | 3.3 | 2.84 | 3.2 | 2.53 | 3.1 | 2.23 | 3.0 | 1.93 | - | - |
| | 7 | 5.0 | 5.95 | 4.7 | 4.78 | 4.6 | 4.28 | 4.5 | 3.83 | 4.1 | 3.43 | 4.1 | 3.08 | - | - |
| | 12 | 5.6 | 6.37 | 5.3 | 5.09 | 5.2 | 4.54 | 5.1 | 4.05 | 4.6 | 3.62 | 4.6 | 3.24 | - | - |
| | 15 | 6.0 | 7.01 | 5.7 | 5.57 | 5.6 | 4.96 | 5.5 | 4.42 | 5.0 | 3.94 | 4.9 | 3.53 | - | - |
| | 20 | 6.8 | 8.24 | 6.5 | 6.47 | 6.3 | 5.74 | 6.2 | 5.12 | 5.7 | 4.58 | 5.6 | 4.11 | - | - |

## 5.3 Part load chart

### (1)Packaged-type units

### PUZ-WM50VHA(-BS)

■ **Water outlet temperature 35 [°C ]**

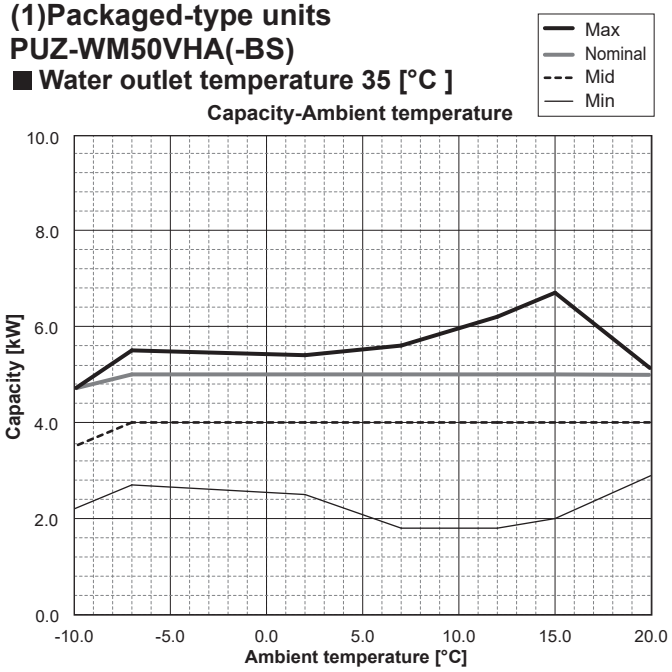


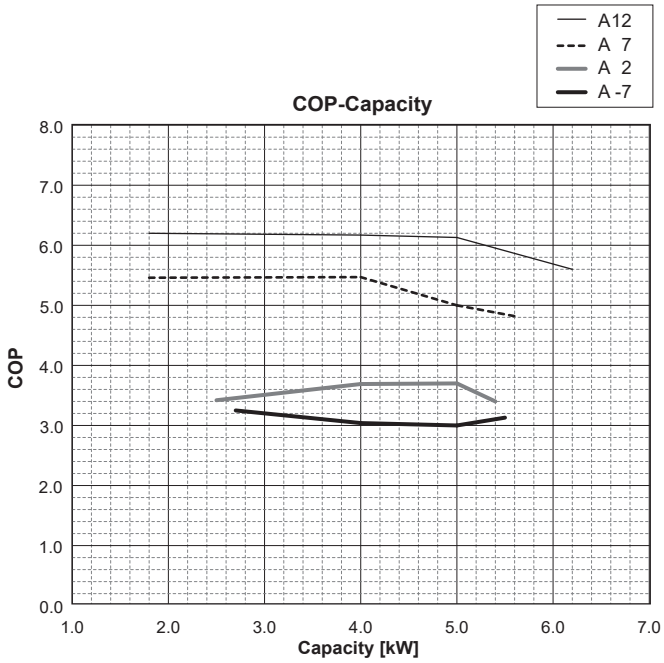


■ **Water outlet temperature 45 [°C ]**

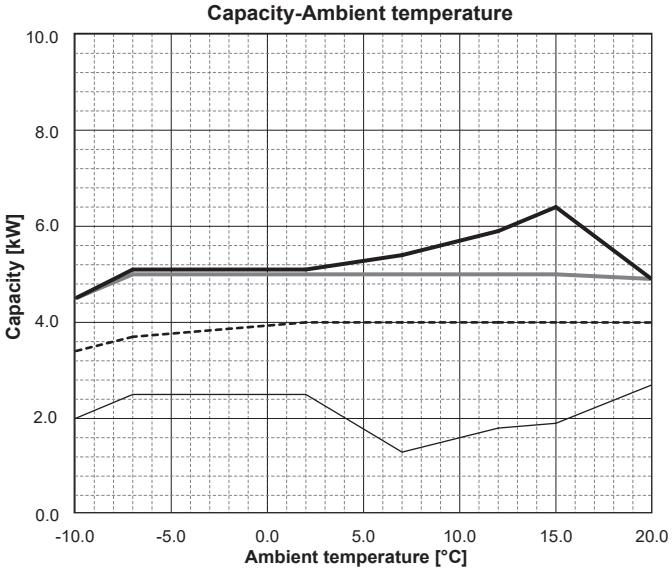


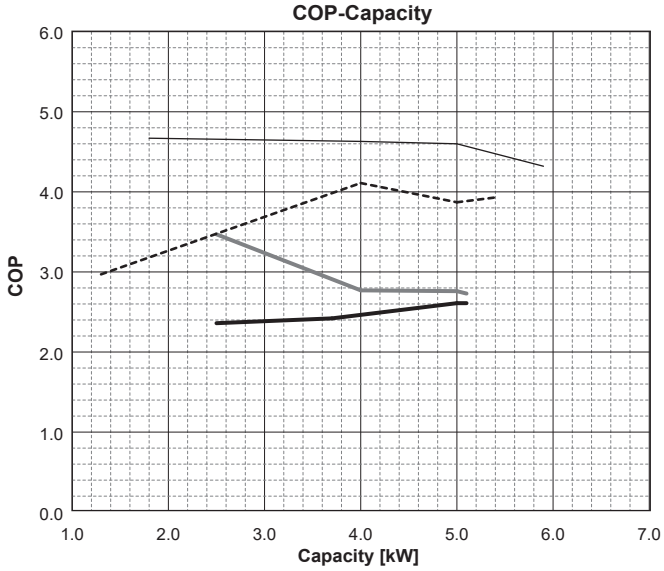


■ **Water outlet temperature 55 [°C ]**

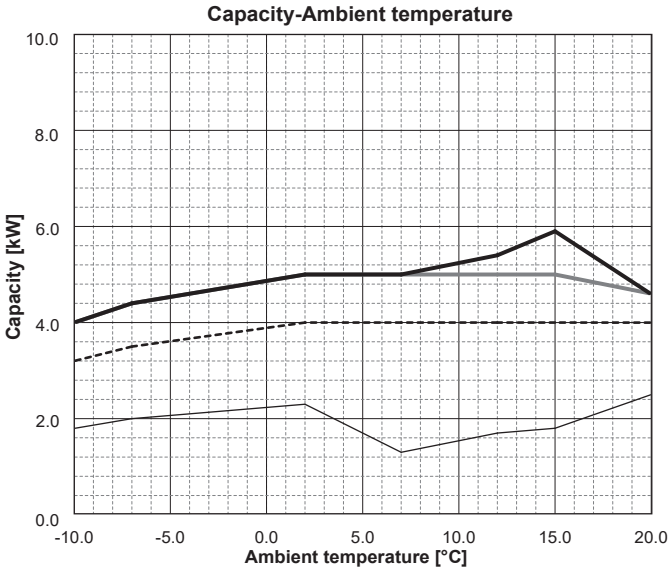


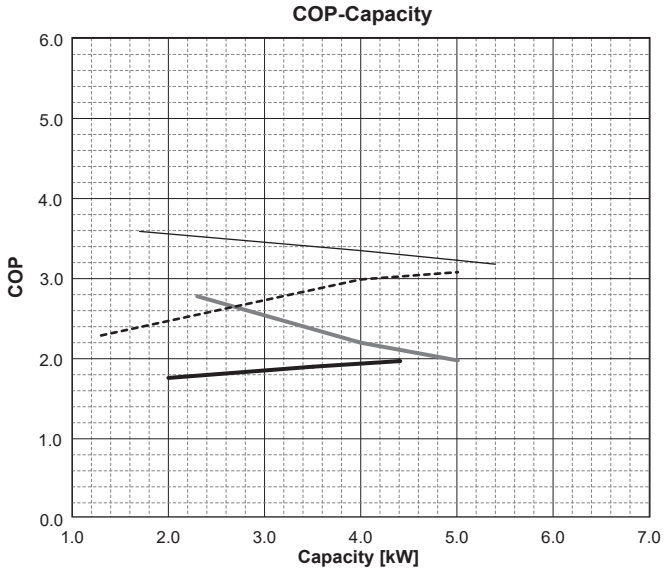

## PUZ-WM60VAA(-BS)

### ■ Water outlet temperature 35 [°C ]

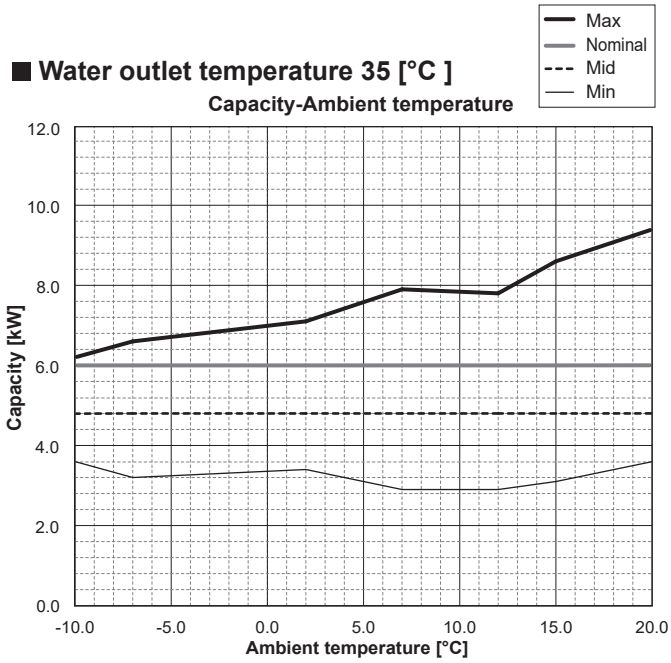


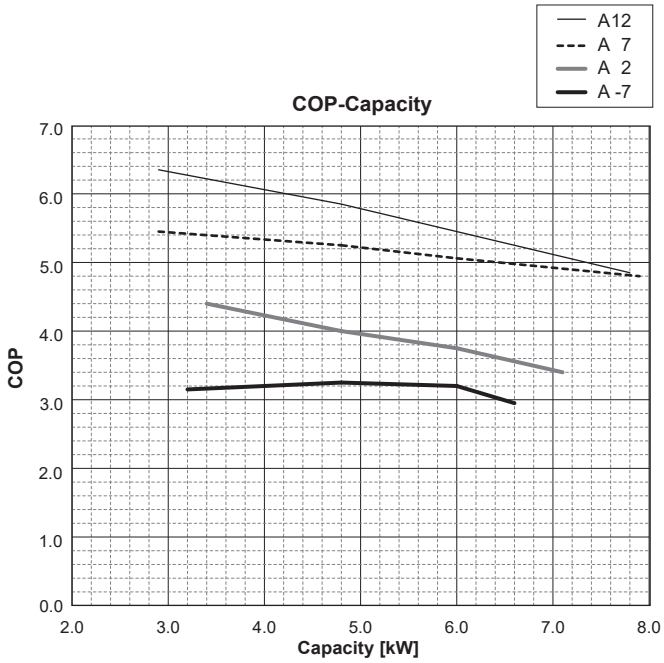


### ■ Water outlet temperature 45 [°C ]

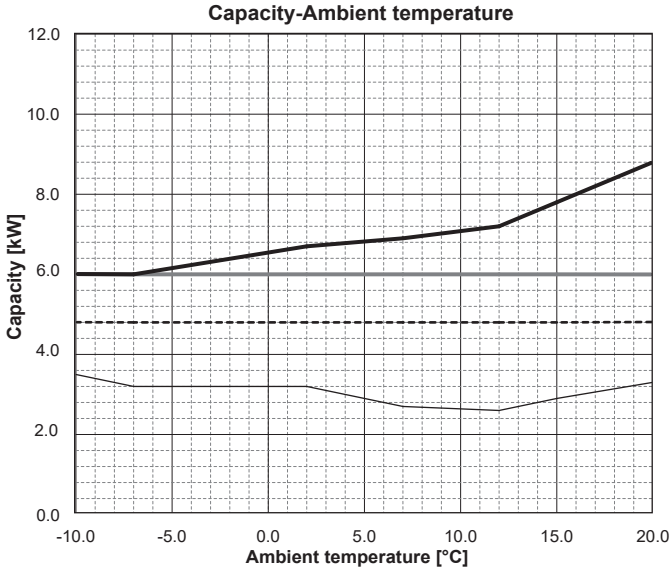


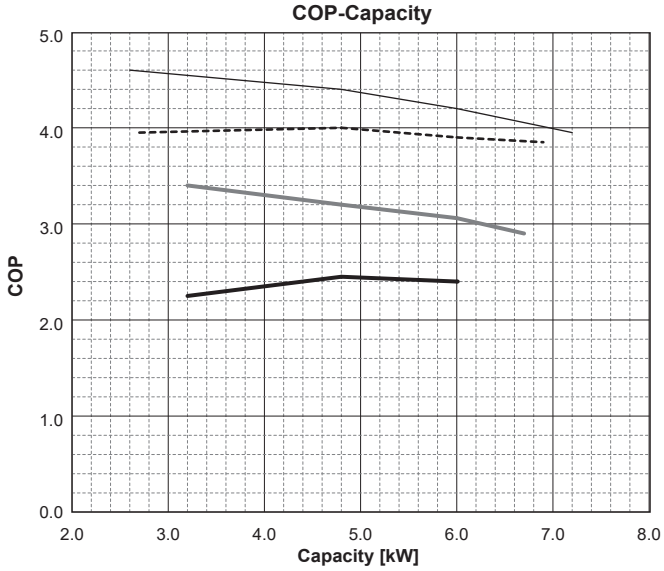


### ■ Water outlet temperature 55 [°C ]

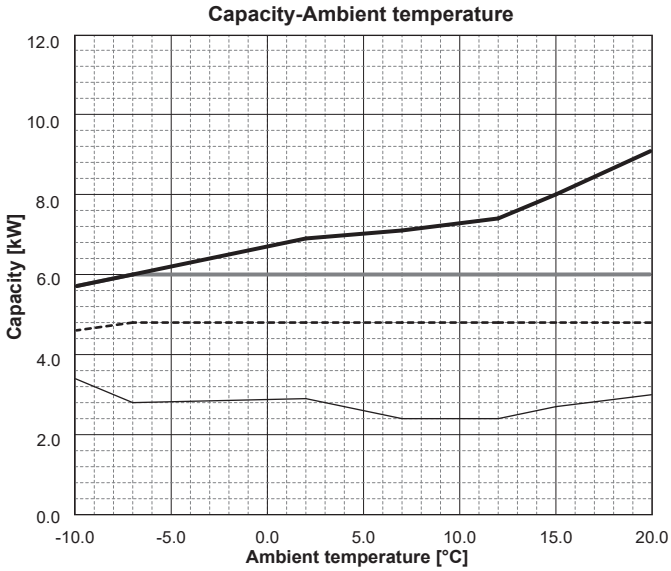


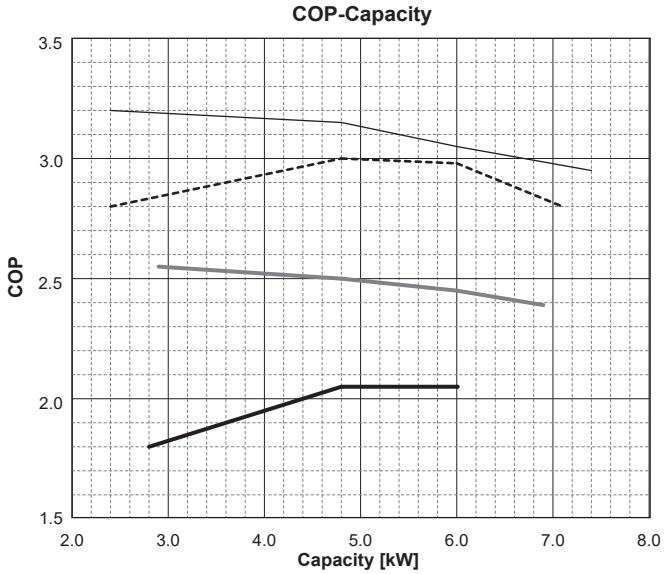

## PUZ-WM85VAA(-BS) PUZ-WM85YAA(-BS)

### ■ Water outlet temperature 35 [°C ]

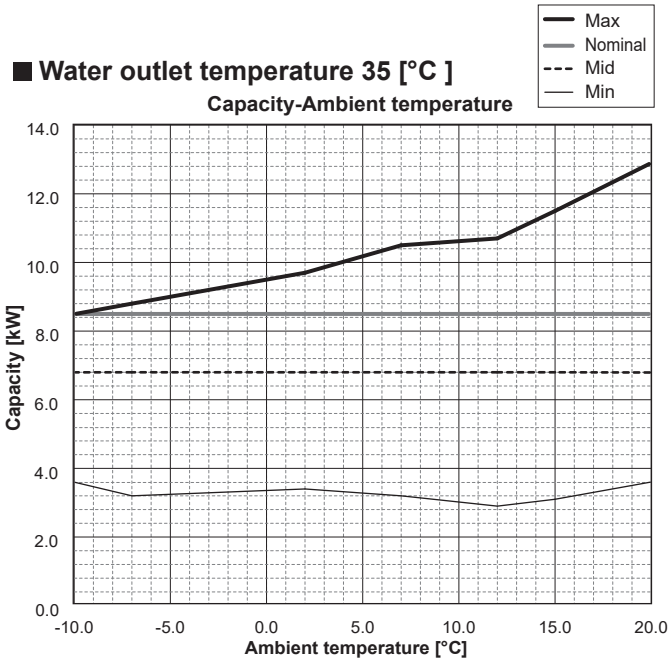


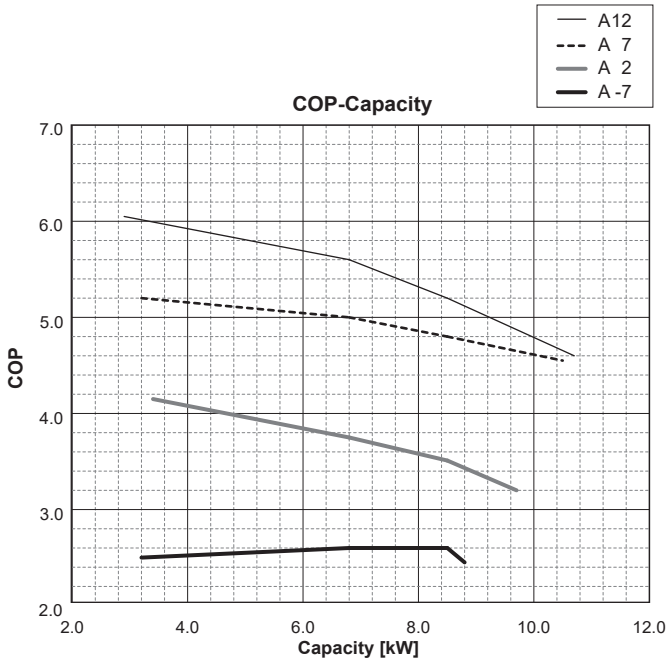


### ■ Water outlet temperature 45 [°C ]

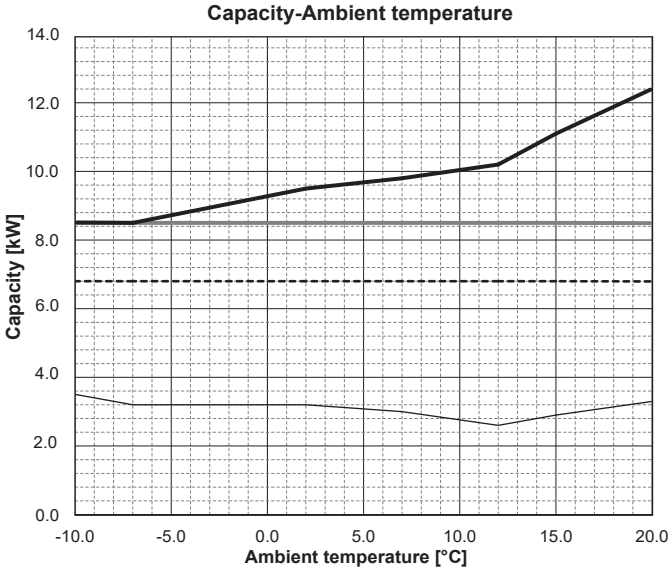


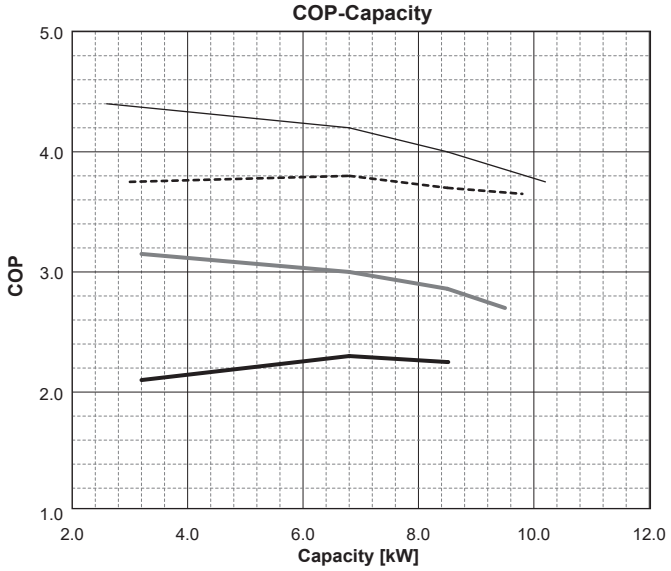


### ■ Water outlet temperature 55 [°C ]

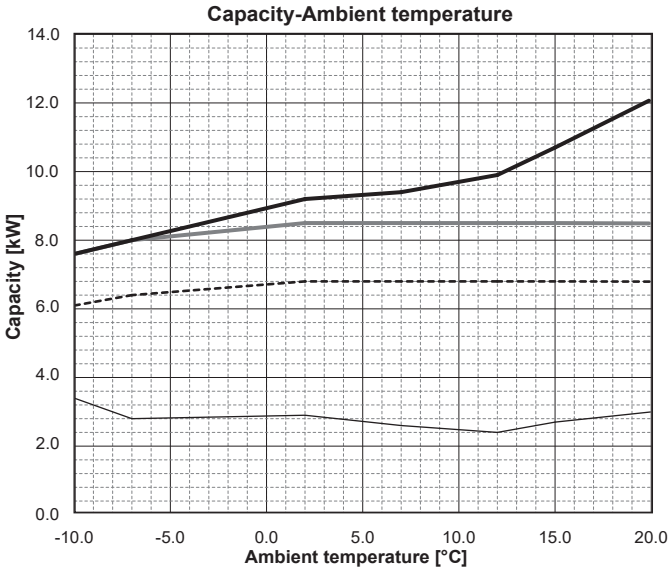


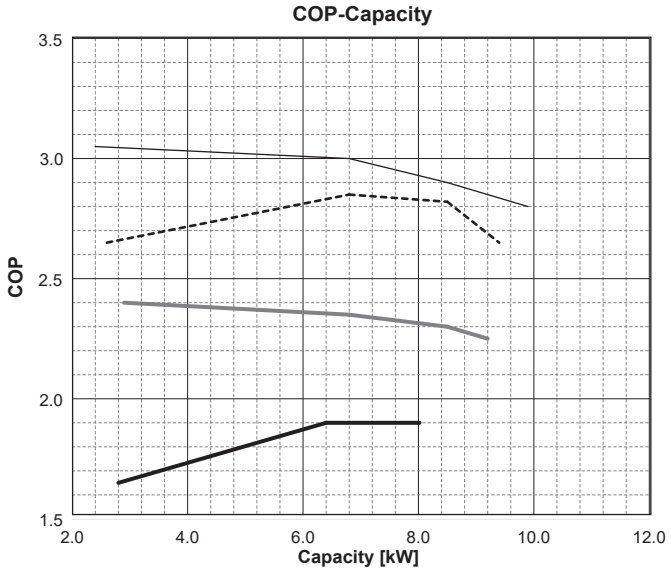

## PUZ-WM112VAA(-BS) PUZ-WM112YAA(-BS)

### ■ Water outlet temperature 35 [°C ]

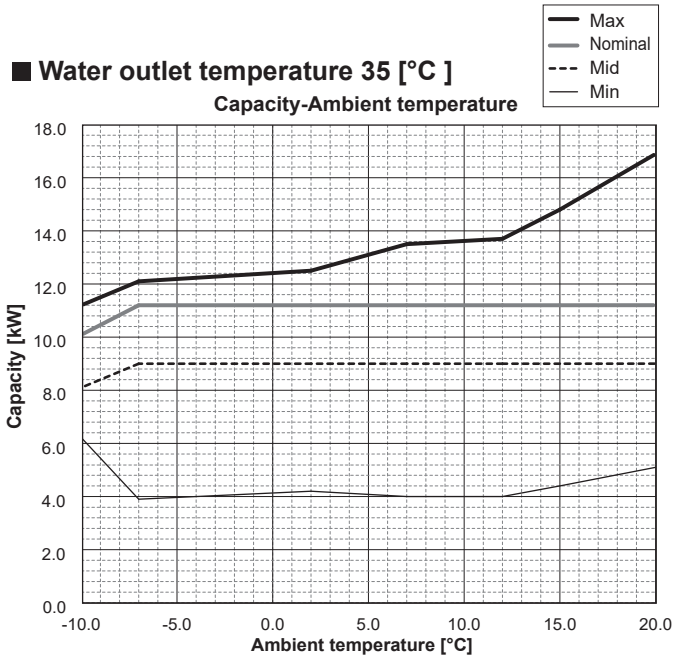


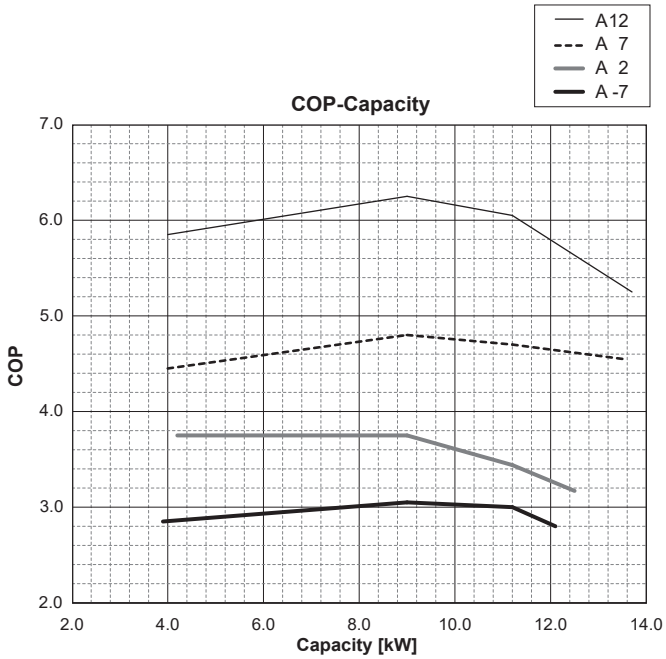


### ■ Water outlet temperature 45 [°C ]

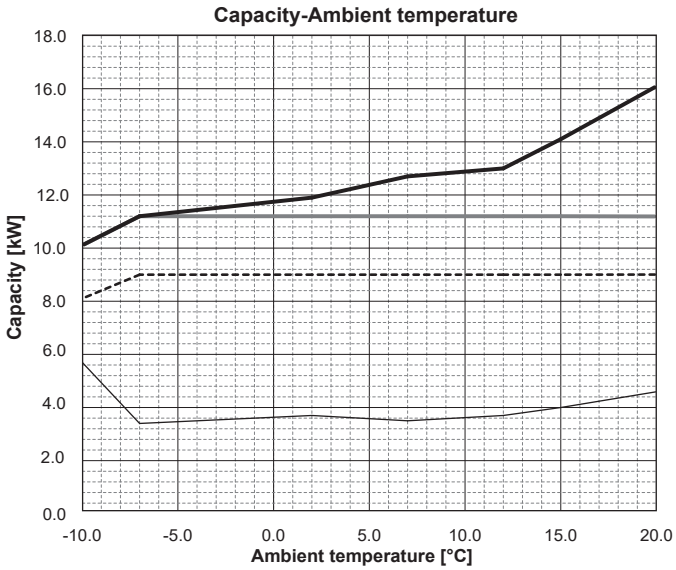


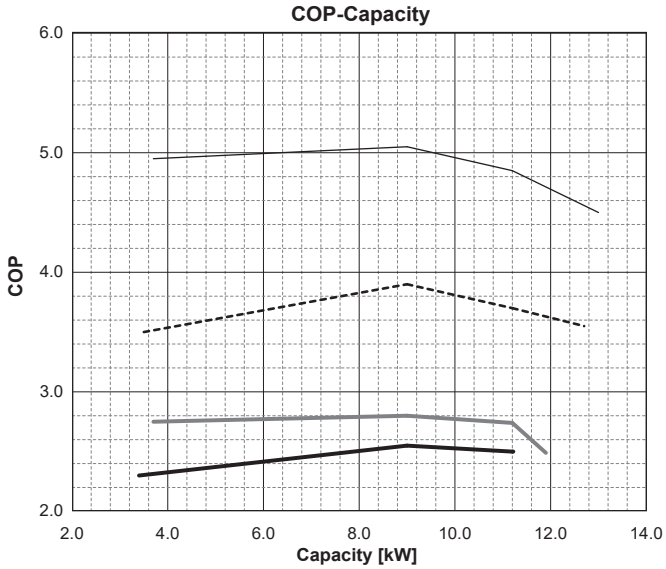


### ■ Water outlet temperature 55 [°C ]

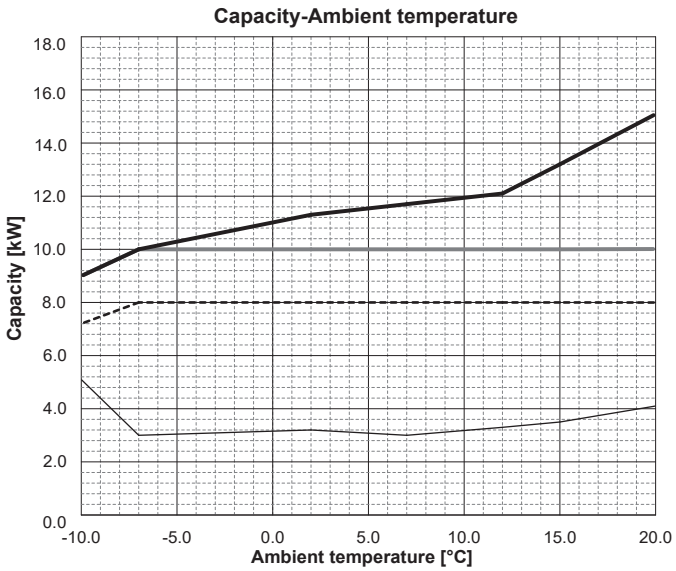


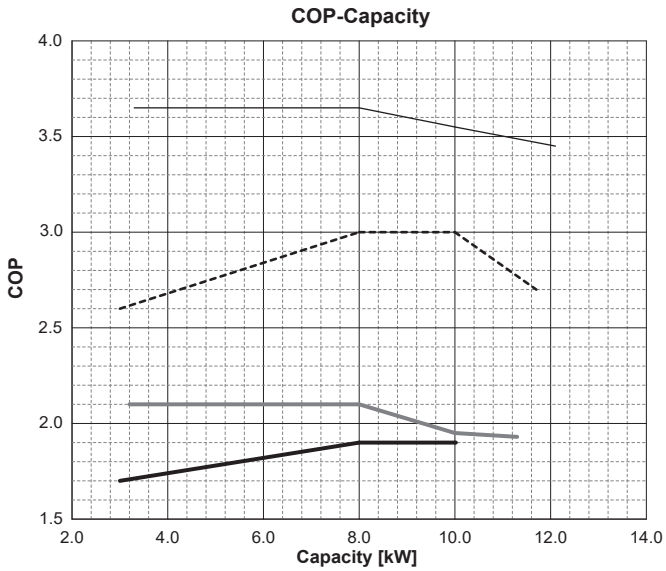

## PUZ-HWM140VHA(-BS) PUZ-HWM140YHA(-BS)

### ■ Water outlet temperature 35 [°C ]

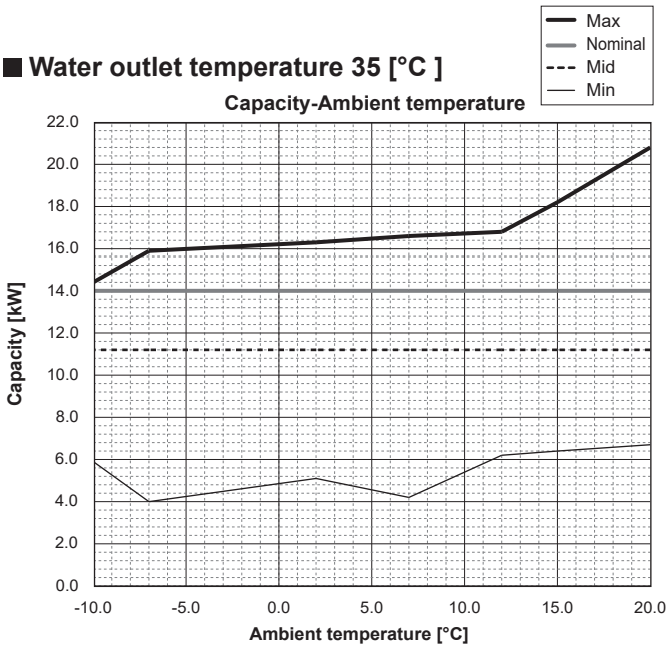


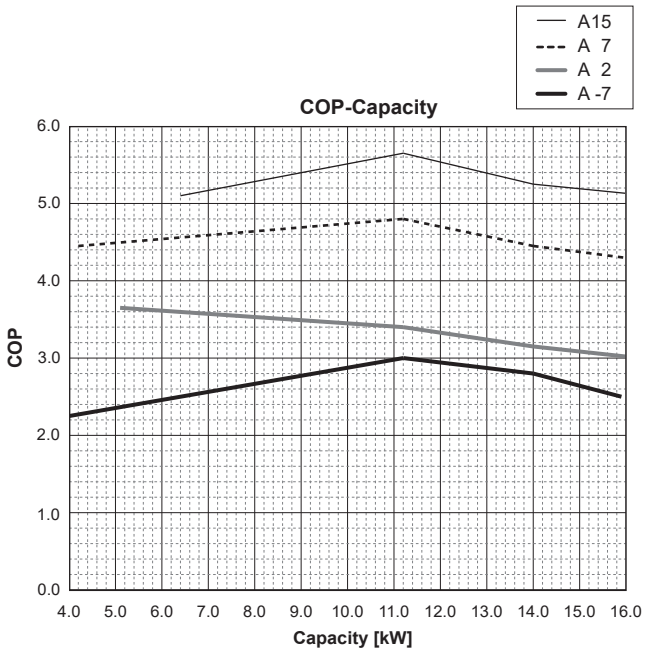


### ■ Water outlet temperature 45 [°C ]

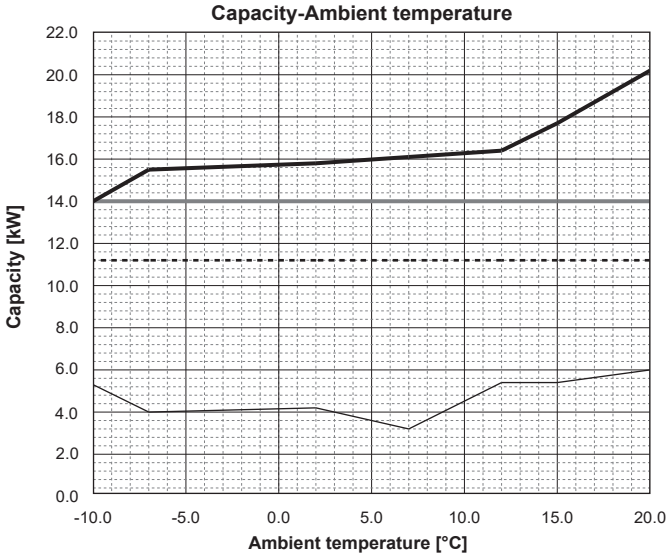


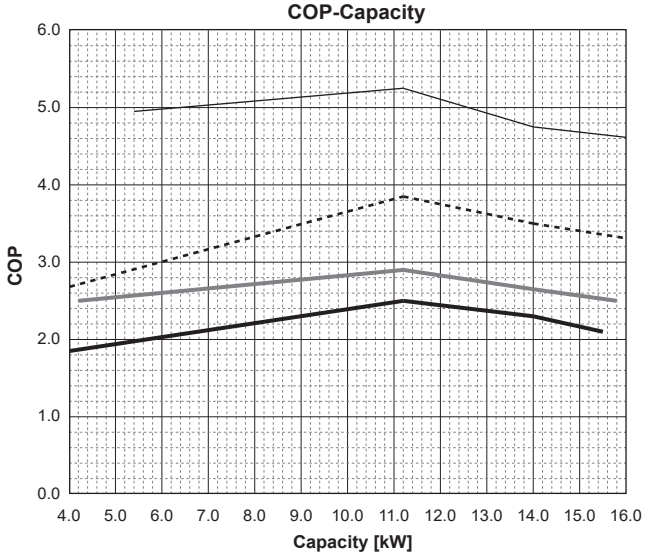


### ■ Water outlet temperature 55 [°C ]

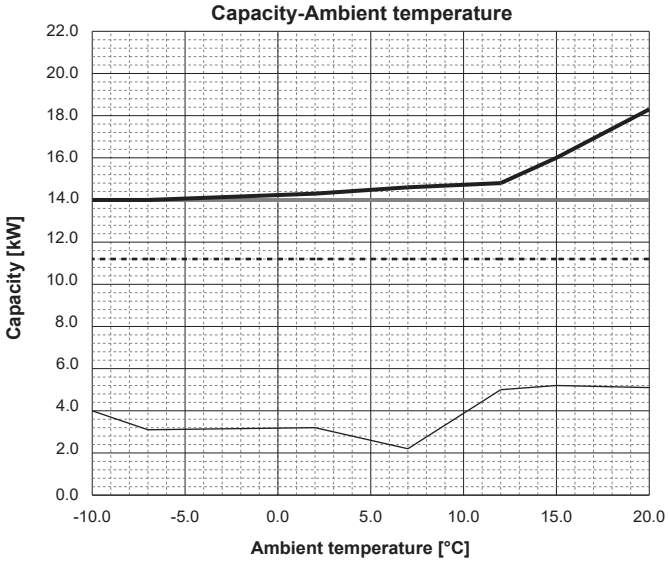


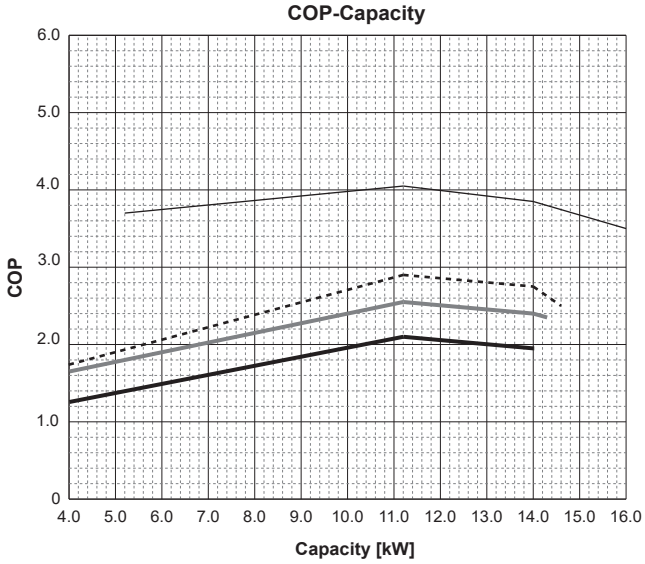

## (2)Split-type units
## SUZ-SWM40VA

### ■ Water outlet temperature 35 [°C ]

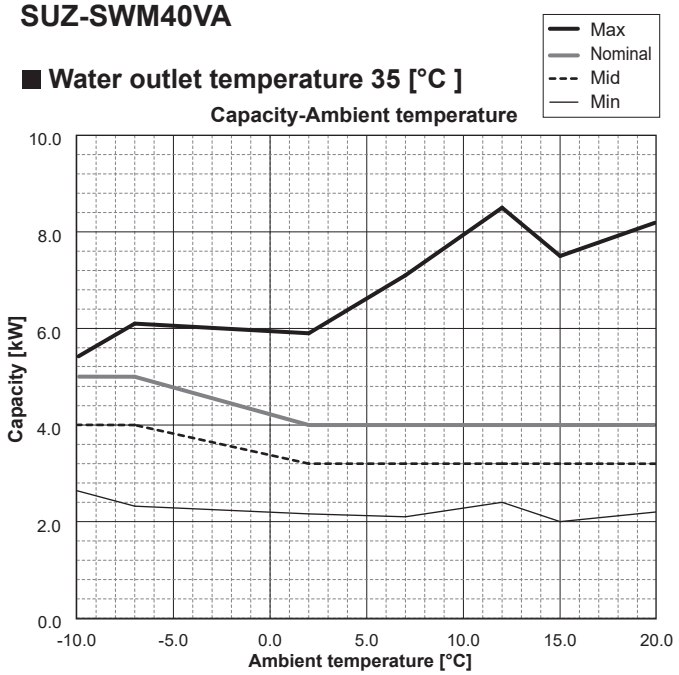


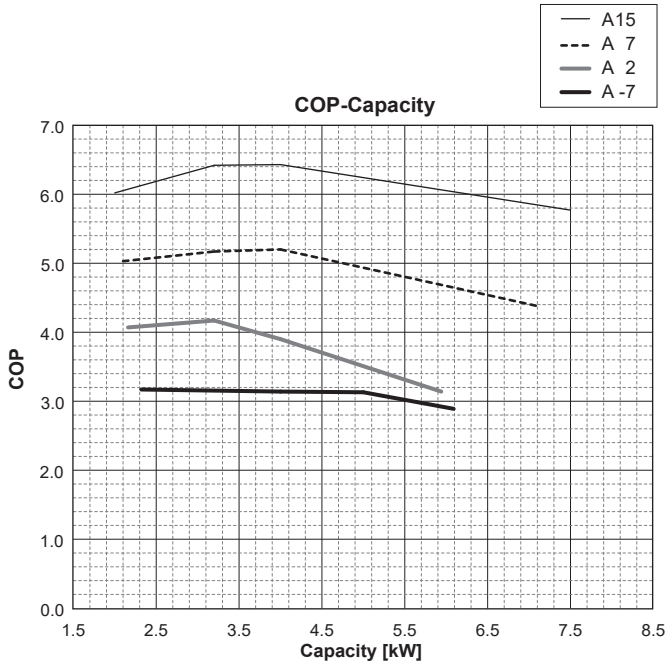


### ■ Water outlet temperature 45 [°C ]

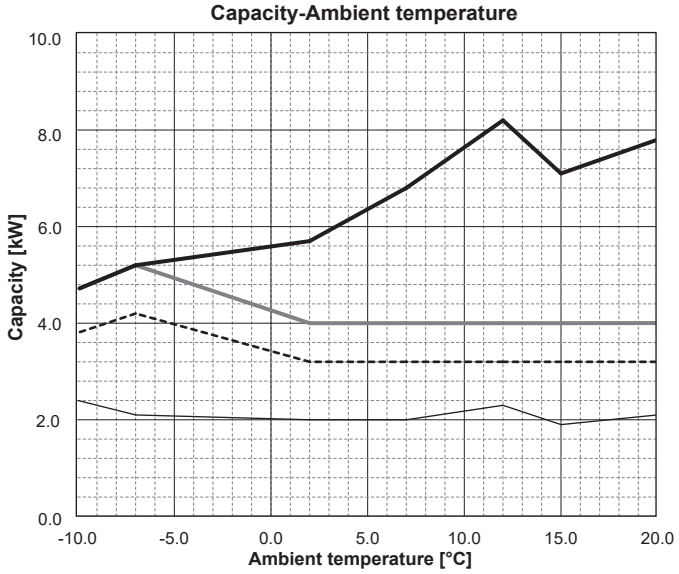


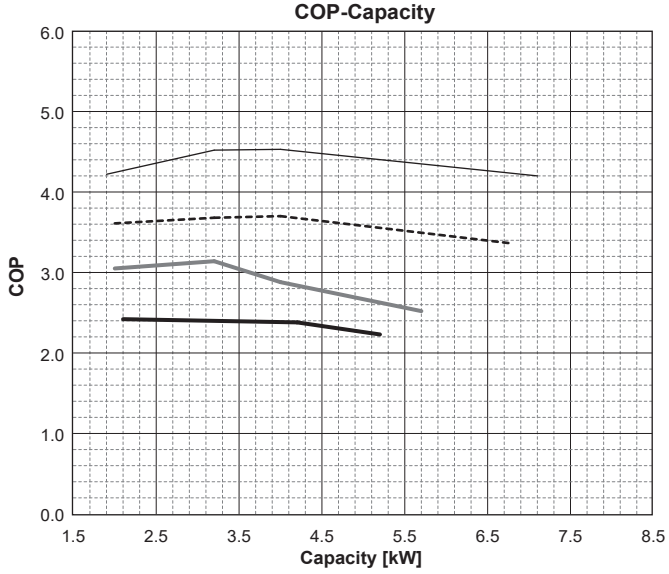


### ■ Water outlet temperature 55 [°C ]

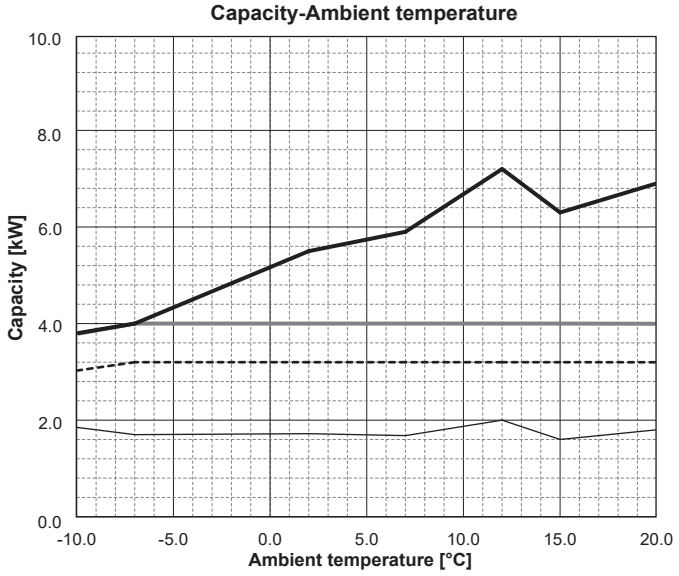


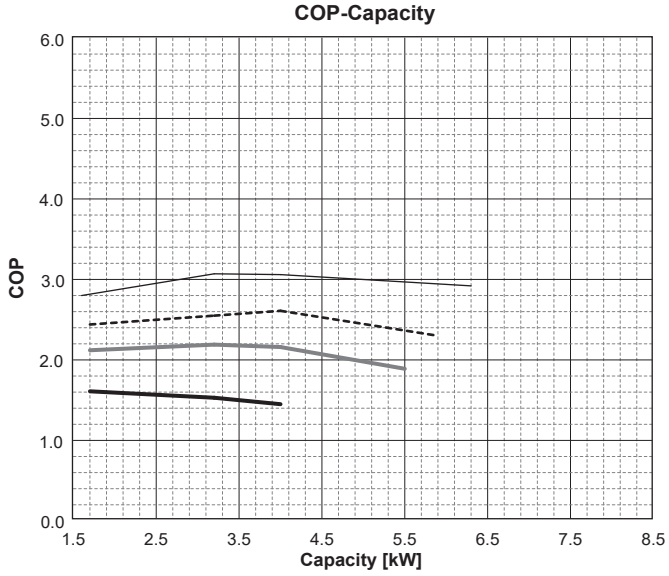

## SUZ-SWM60VA

### ■ Water outlet temperature 35 [°C ]

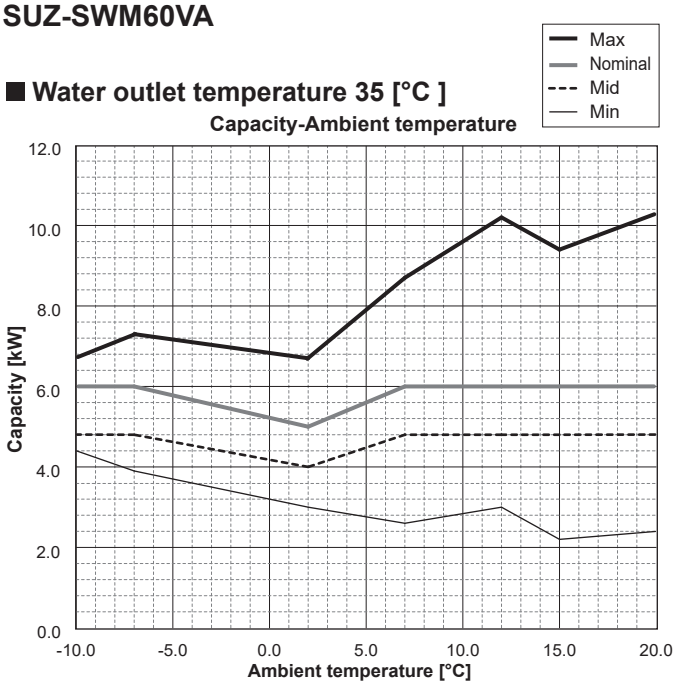


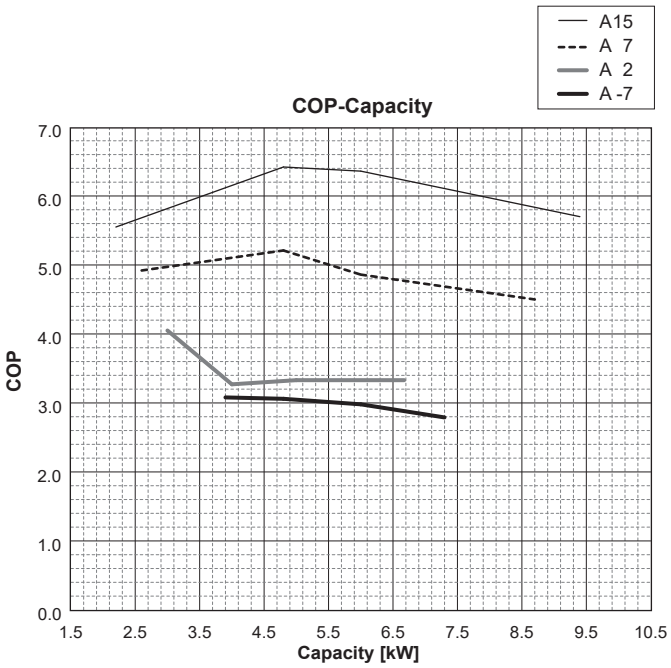


### ■ Water outlet temperature 45 [°C ]

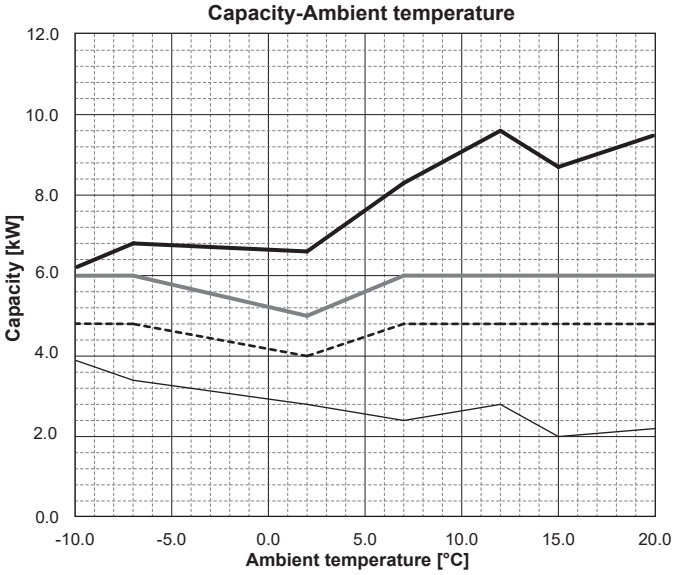


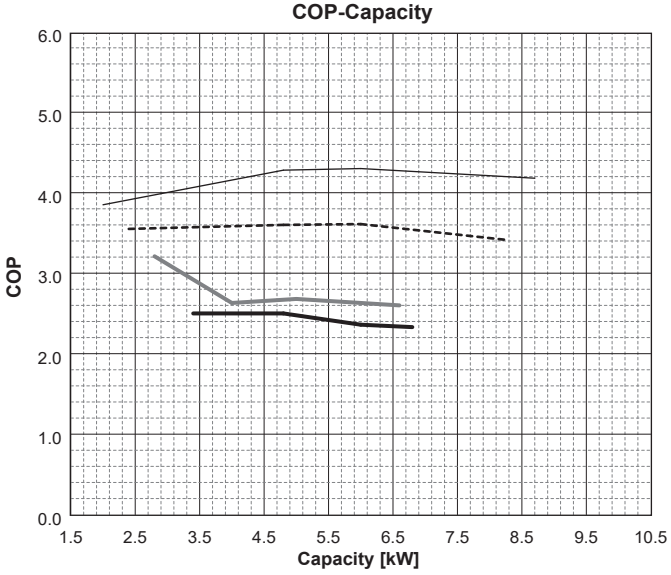


### ■ Water outlet temperature 55 [°C ]

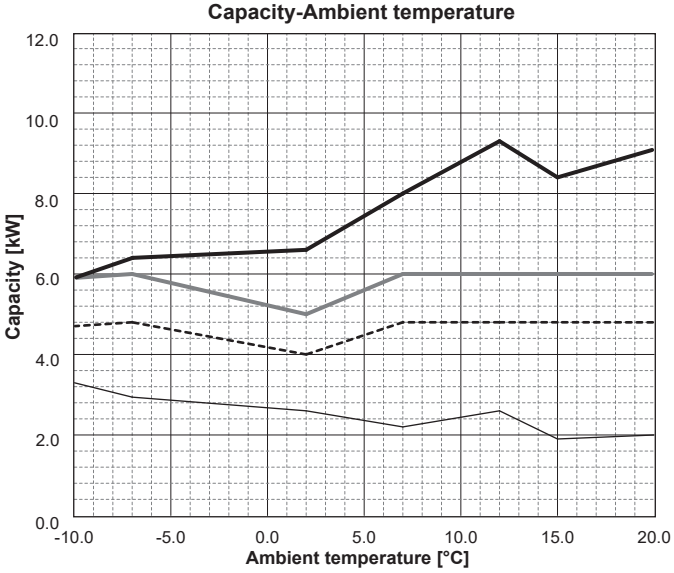


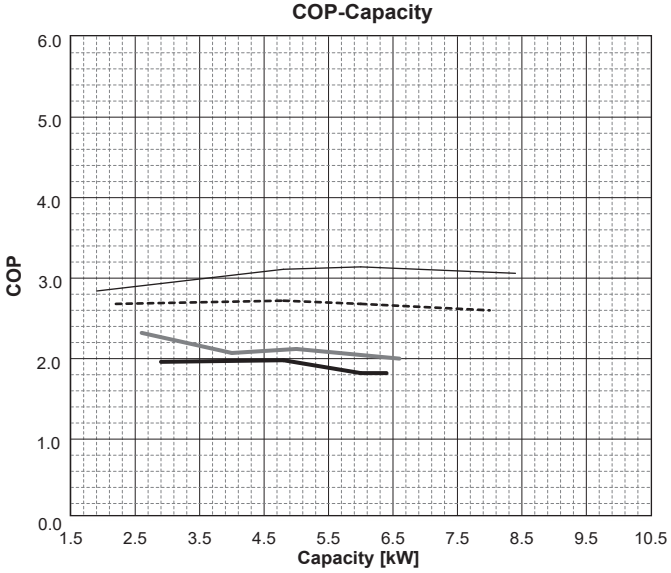

## SUZ-SWM80VA

### ■ Water outlet temperature 35 [°C ]

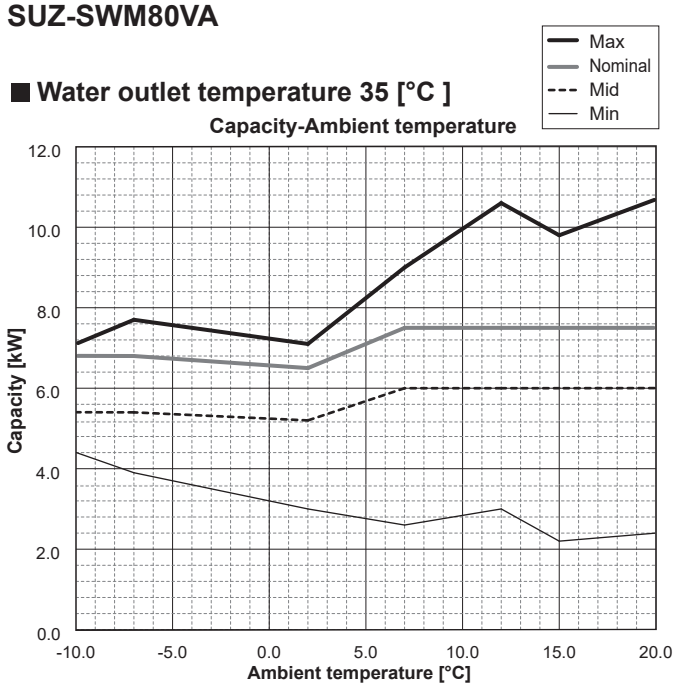


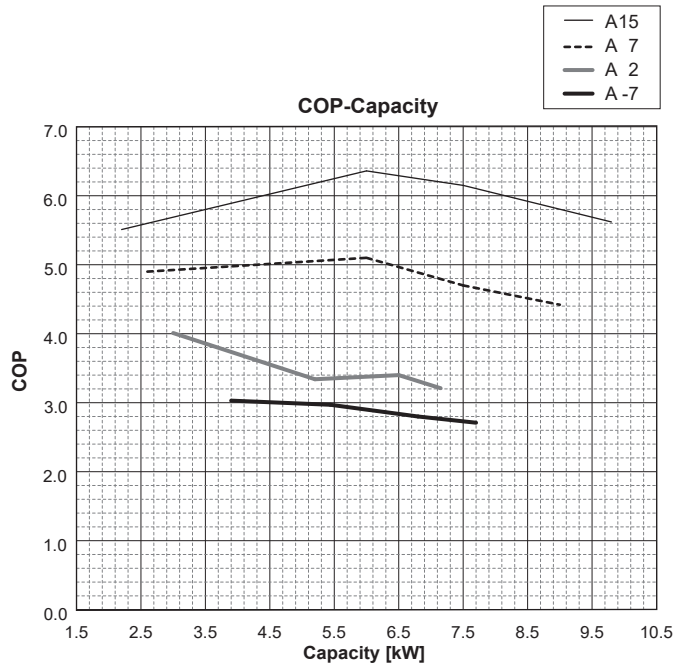


### ■ Water outlet temperature 45 [°C ]

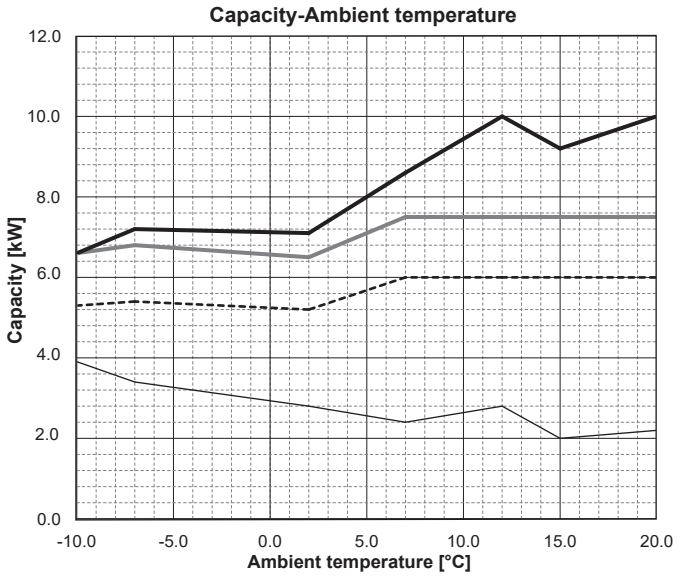


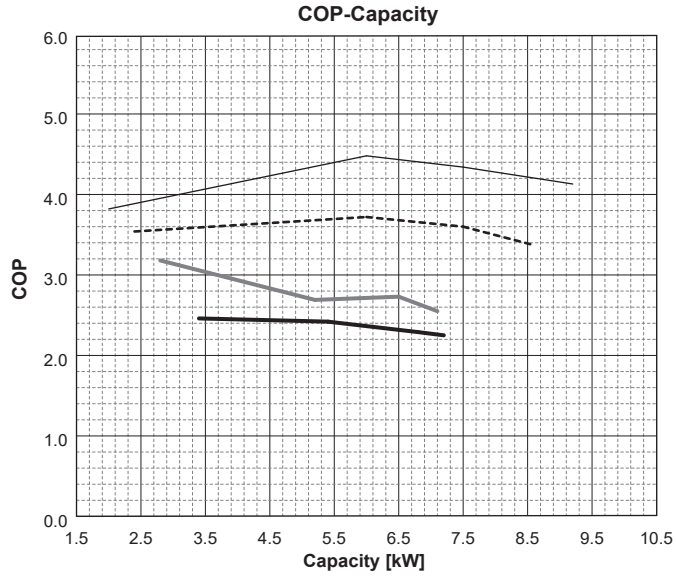


### ■ Water outlet temperature 55 [°C ]

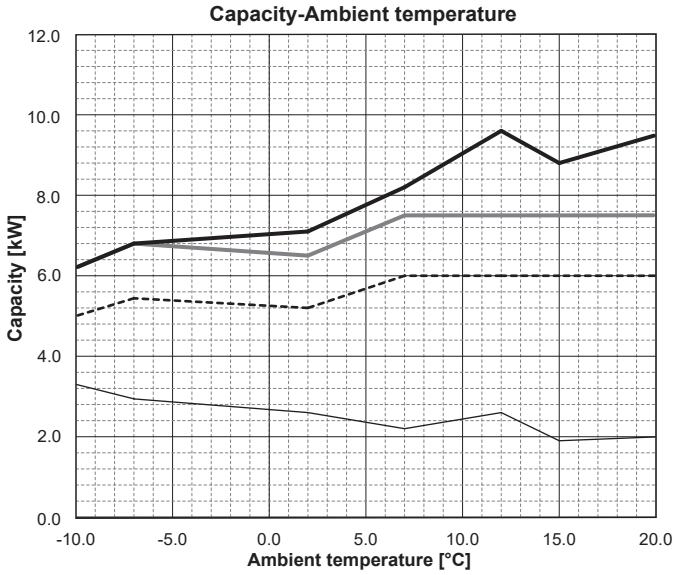


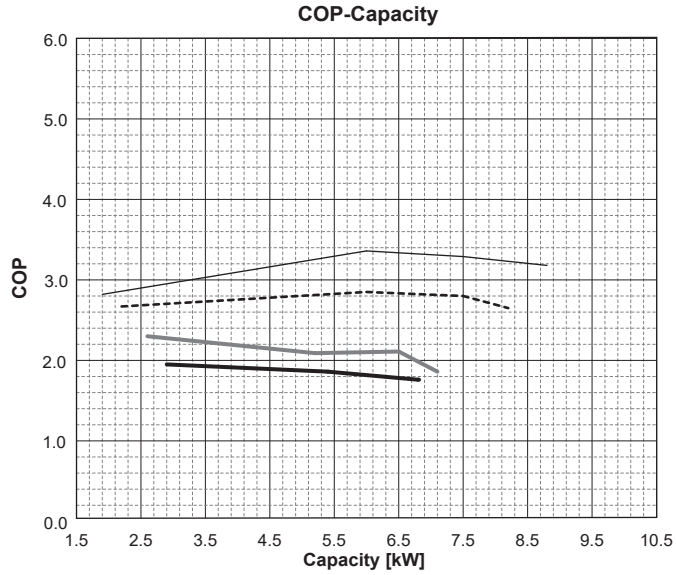

## SUZ-SWM30VA

### ■ Water outlet temperature 35 [°C ]

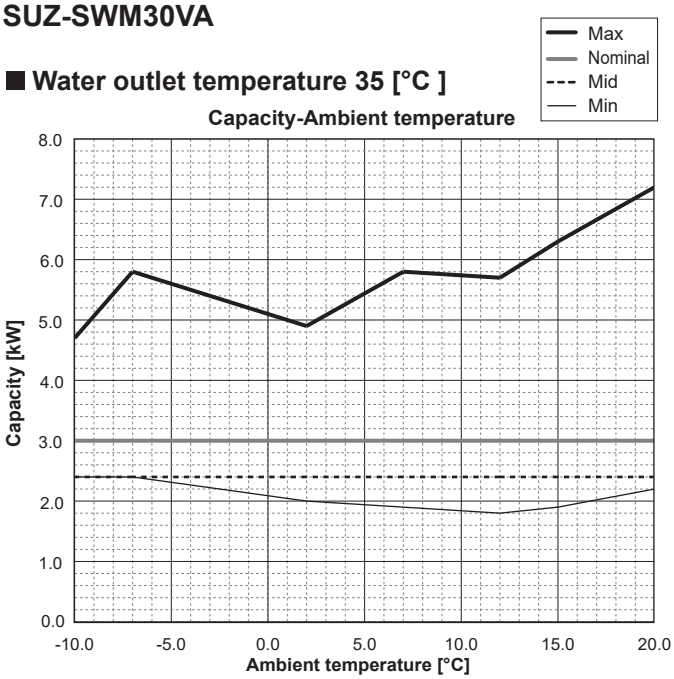


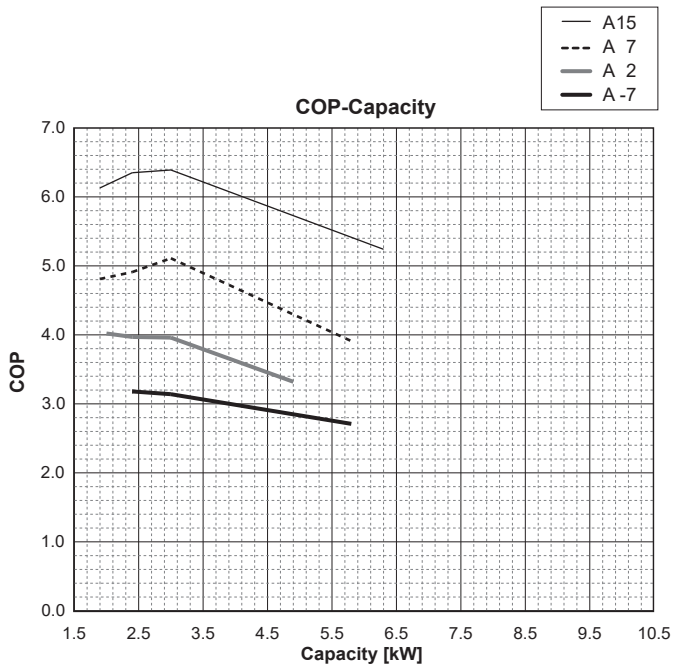


### ■ Water outlet temperature 45 [°C ]

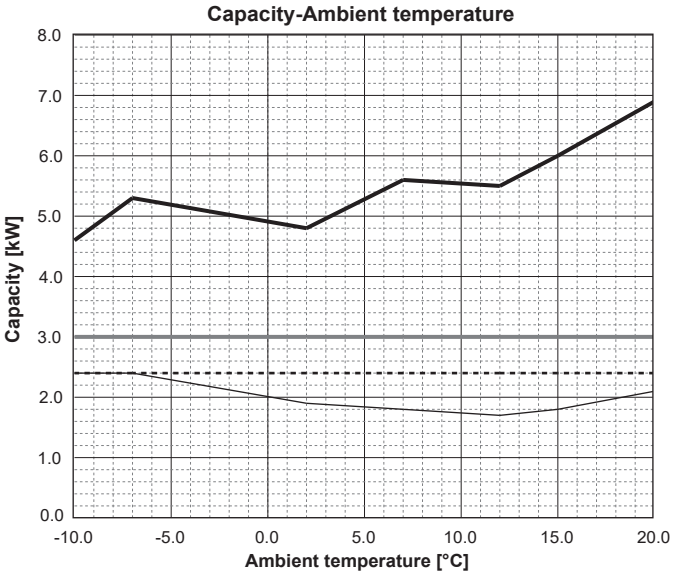


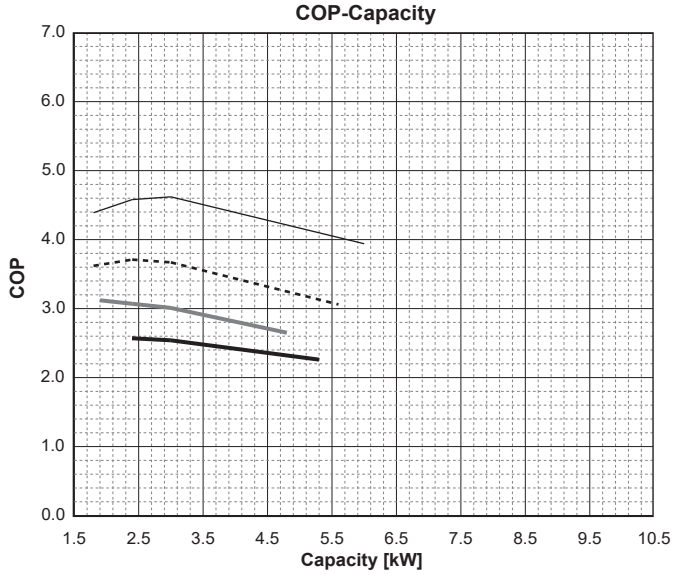


### ■ Water outlet temperature 55 [°C ]

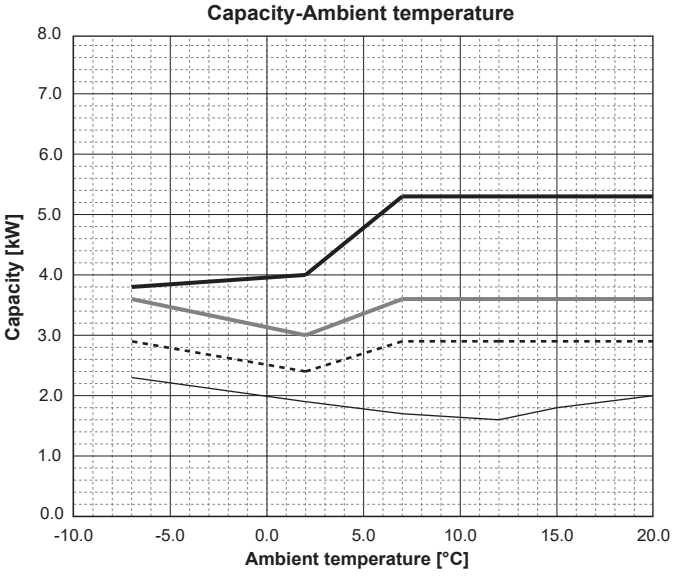


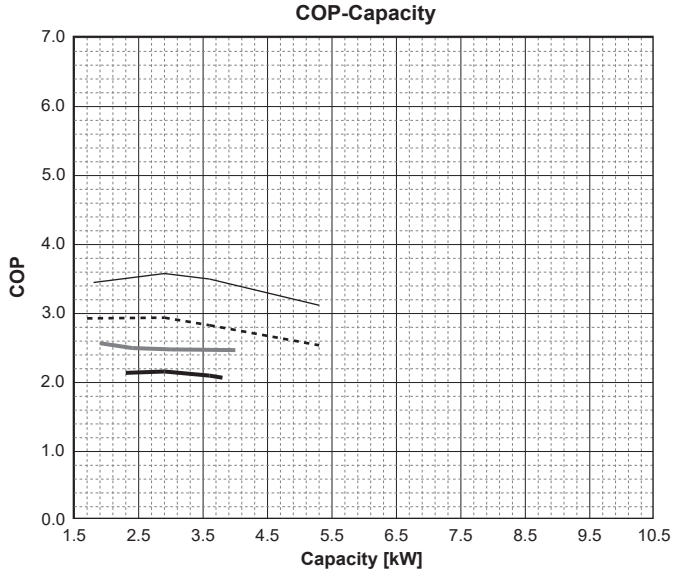

## SUZ-SHWM30VAH

### ■ Water outlet temperature 35 [°C ]

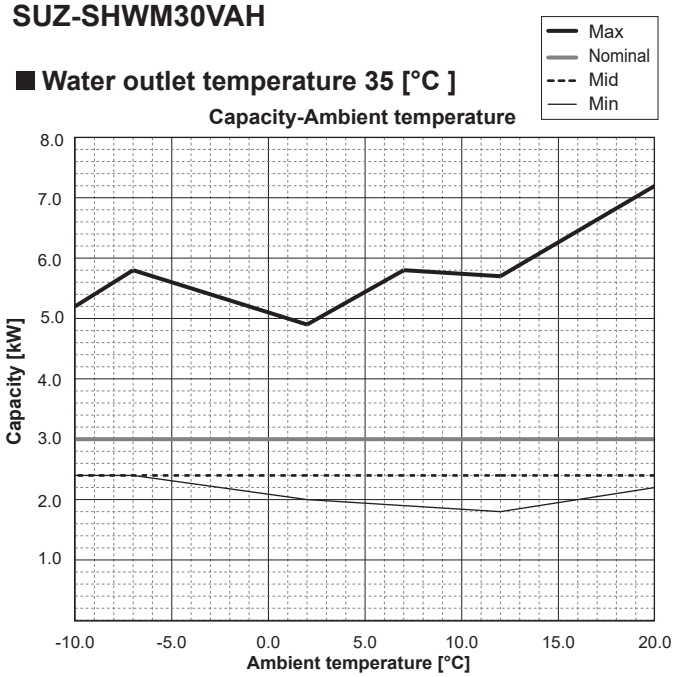


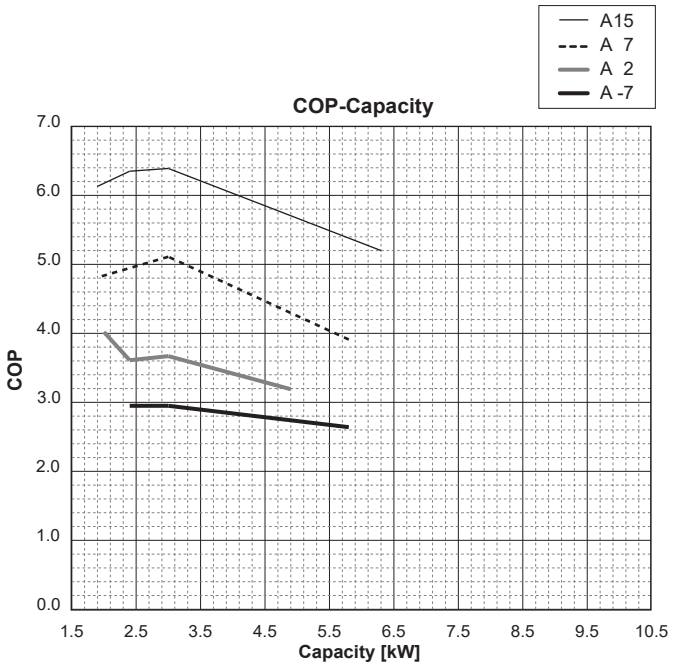


### ■ Water outlet temperature 45 [°C ]

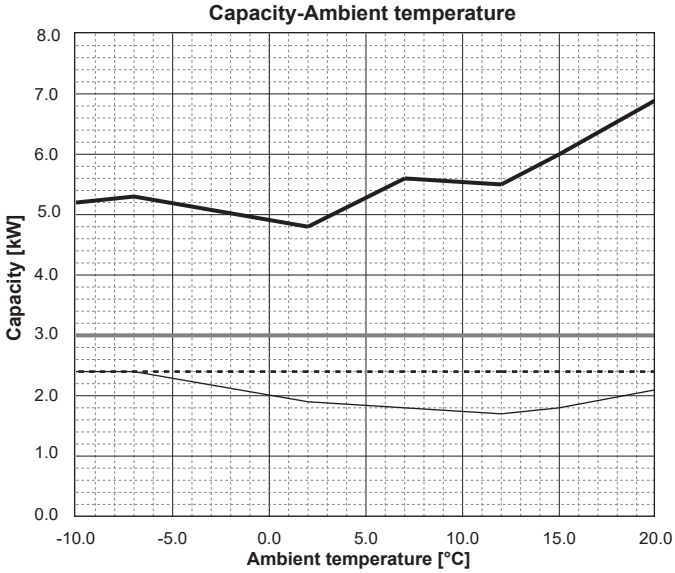


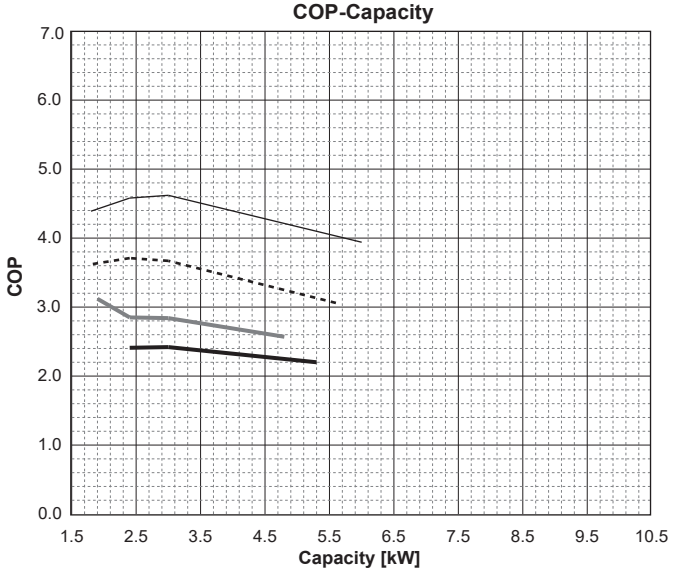


### ■ Water outlet temperature 55 [°C ]

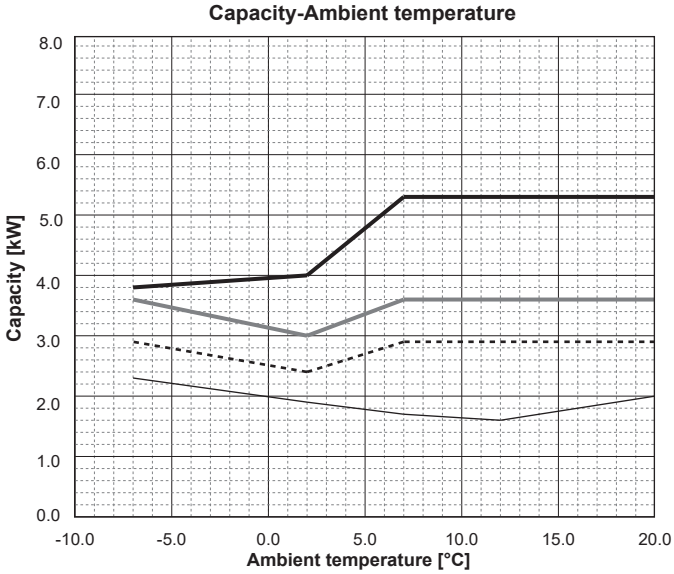


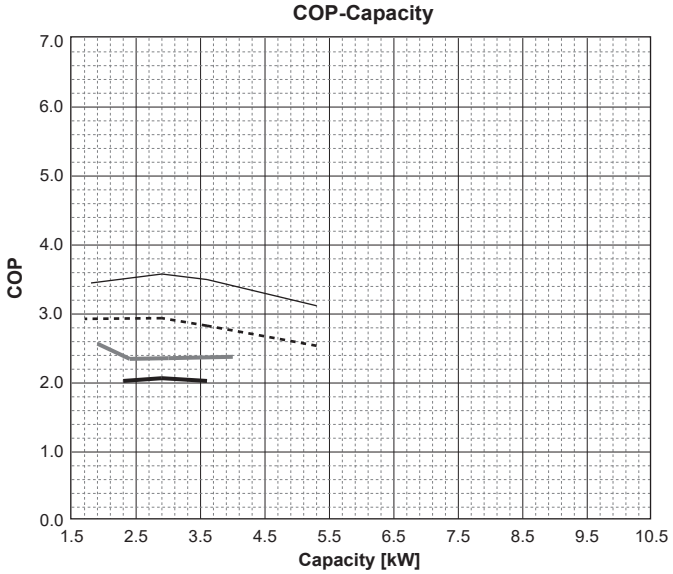

## SUZ-SWM40VA2(-SC)

### ■ Water outlet temperature 35 [°C ]

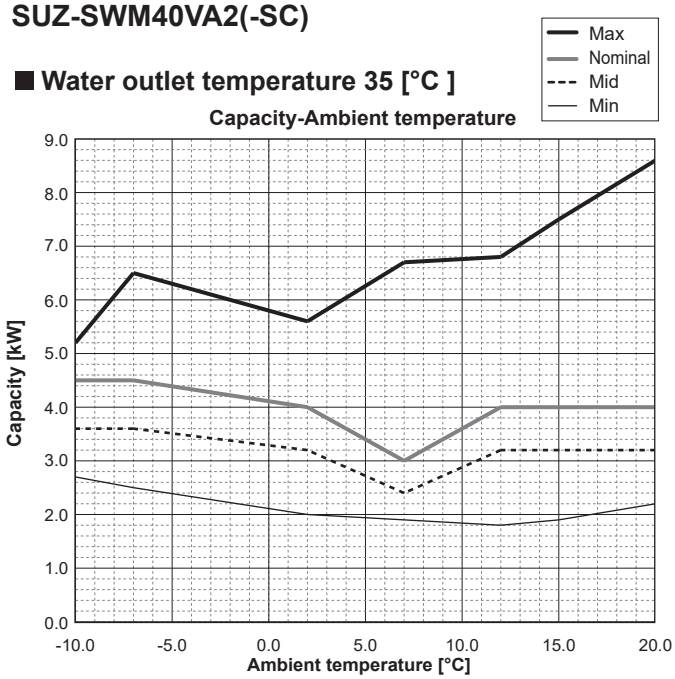


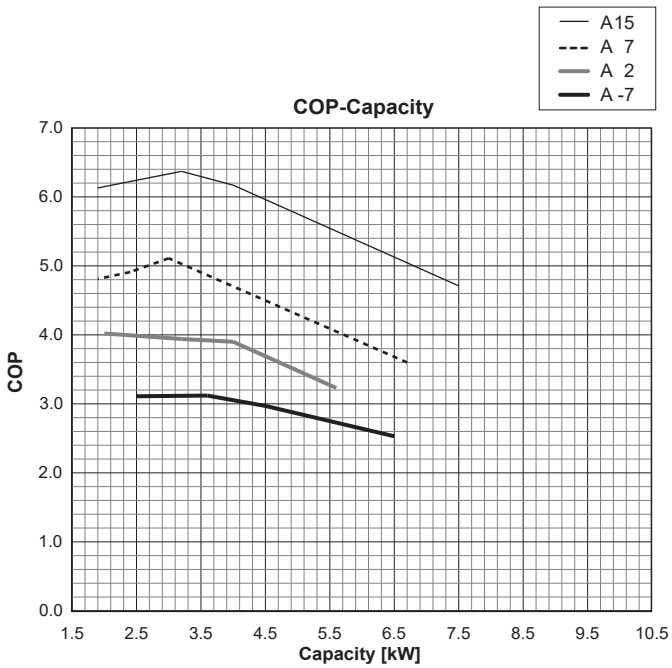


### ■ Water outlet temperature 45 [°C ]

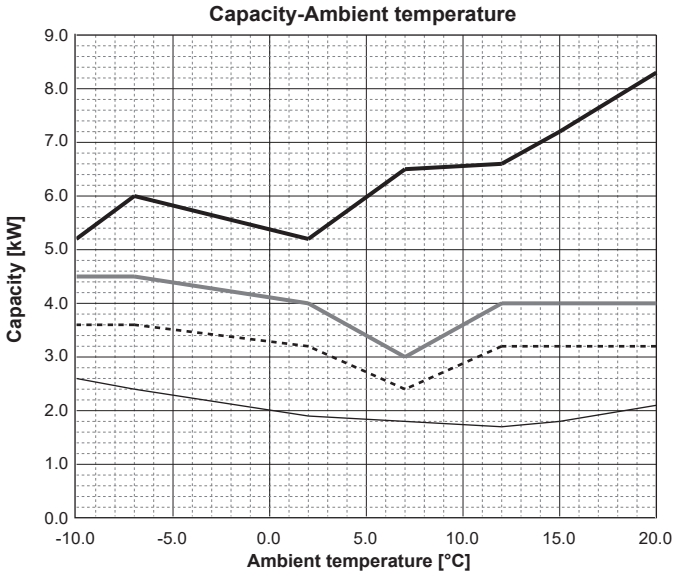


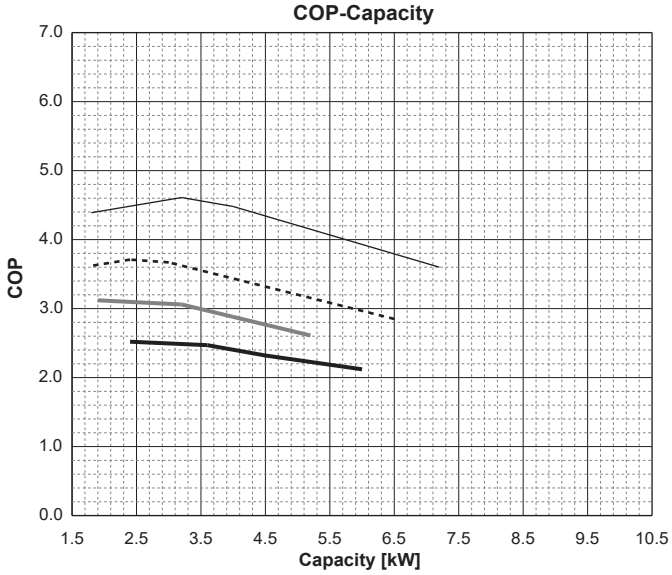


### ■ Water outlet temperature 55 [°C ]

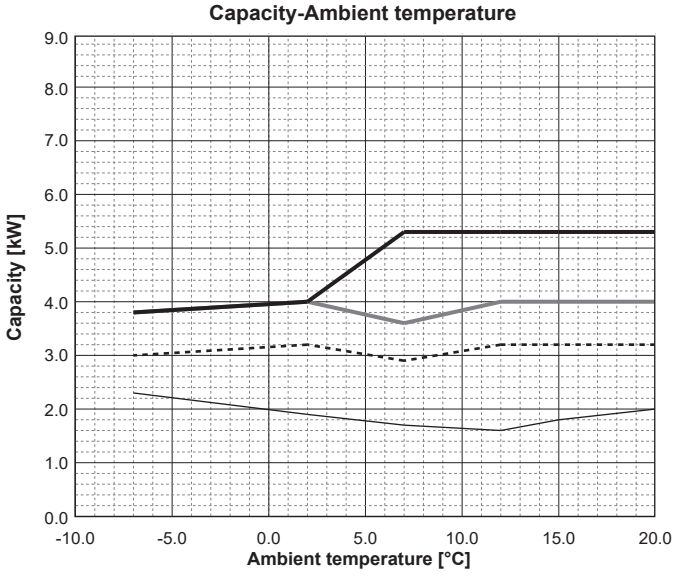


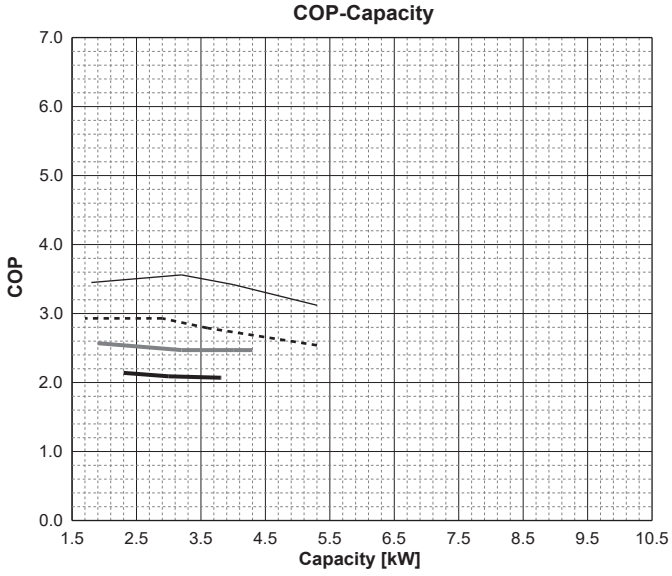

## SUZ-SHWM40VAH(-SC)

### ■ Water outlet temperature 35 [°C ]

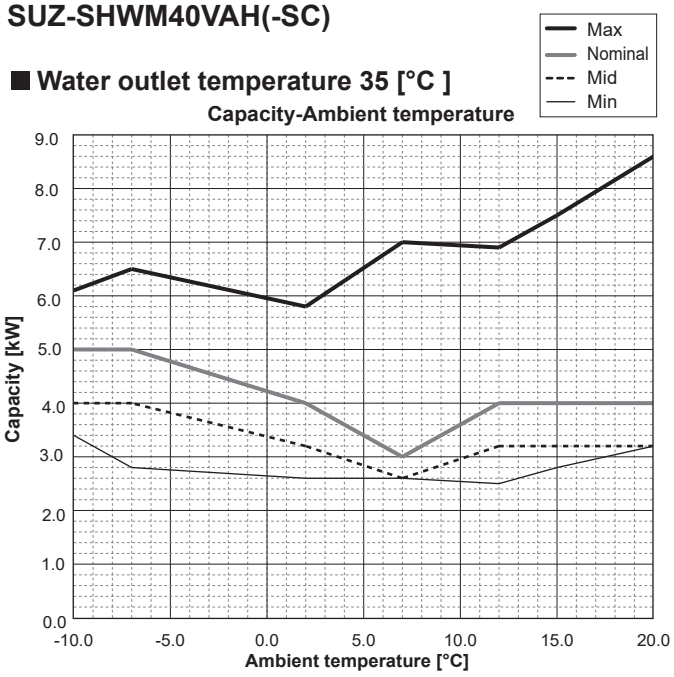


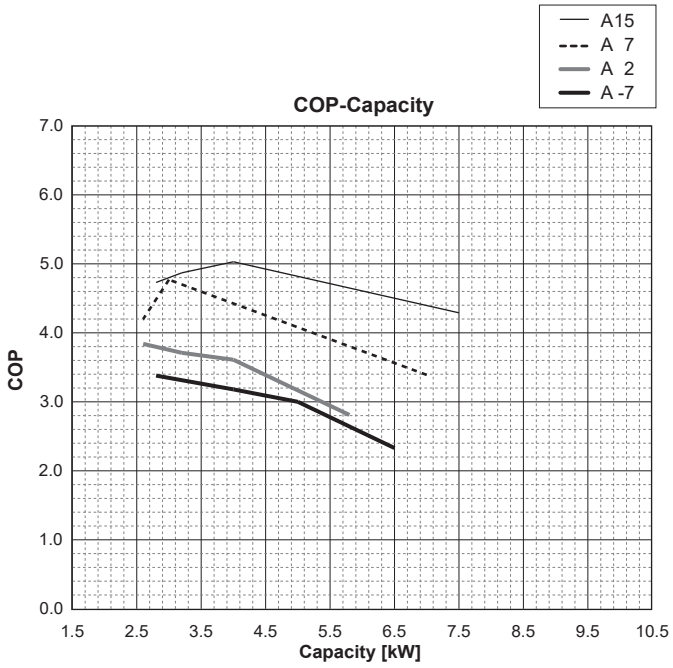


### ■ Water outlet temperature 45 [°C ]

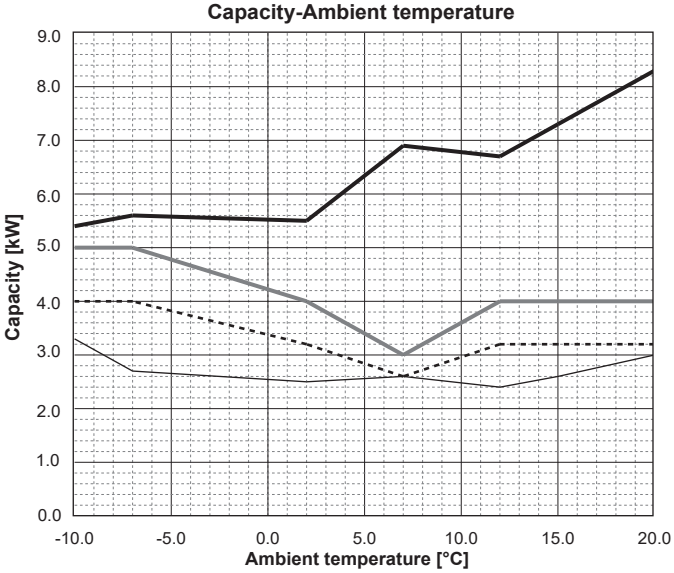


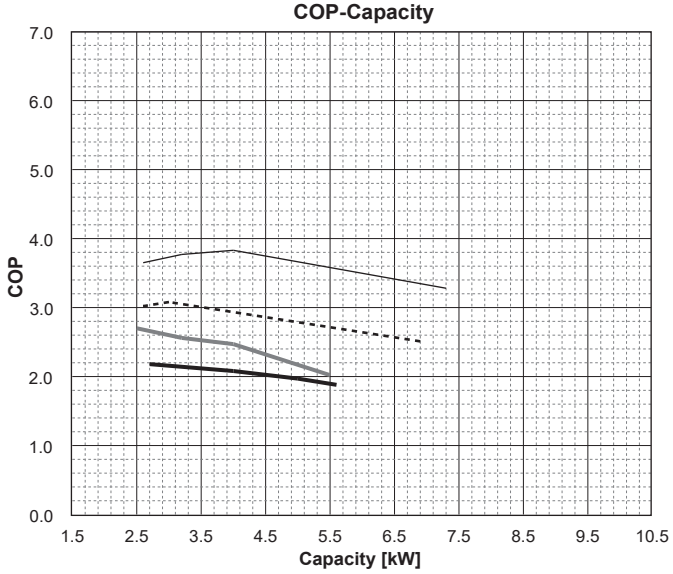


### ■ Water outlet temperature 55 [°C ]

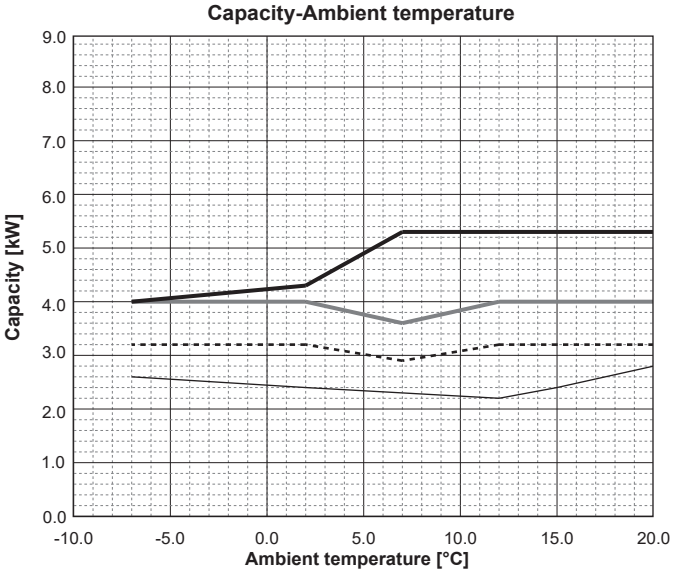


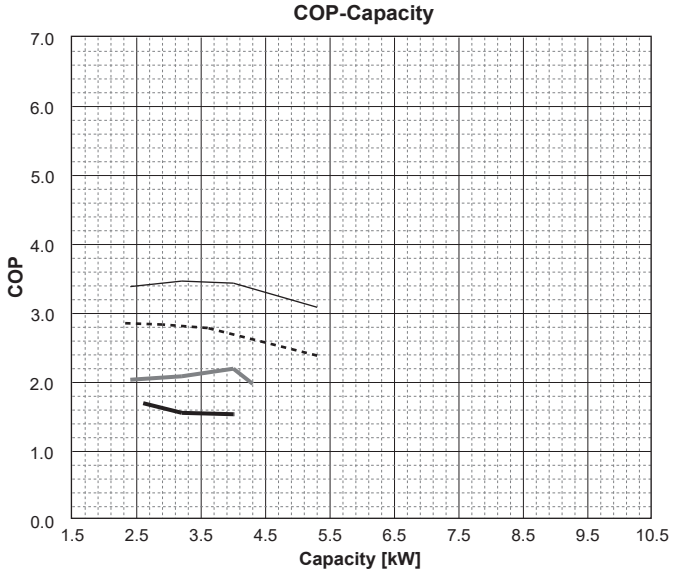

## SUZ-SWM60VA2(-SC)

### ■ Water outlet temperature 35 [°C ]

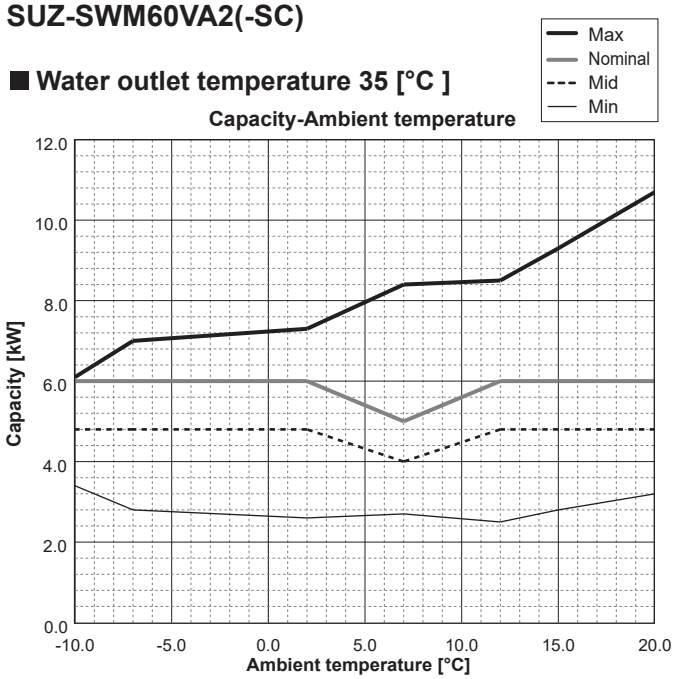


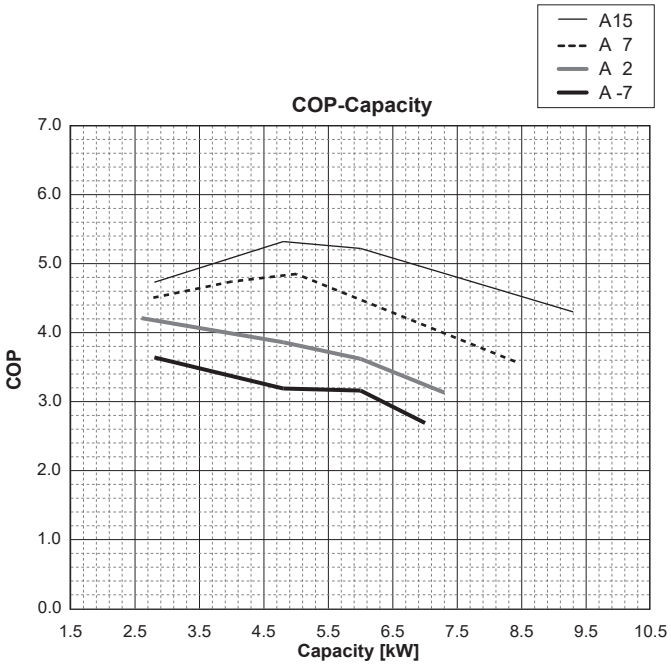


### ■ Water outlet temperature 45 [°C ]

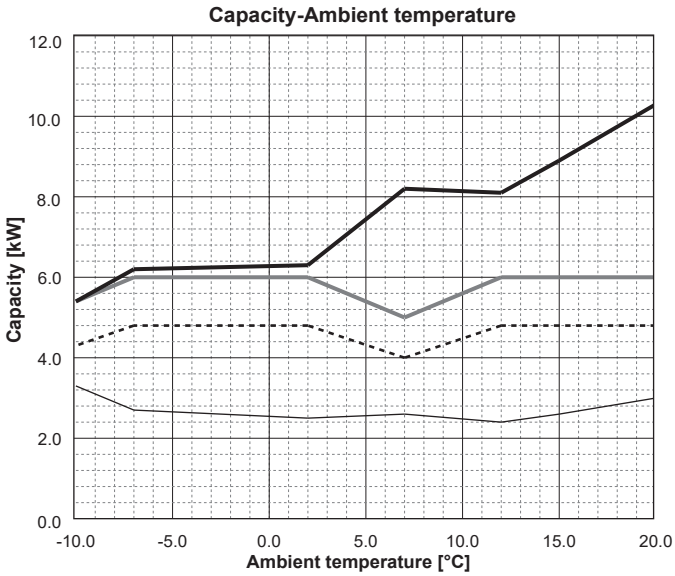


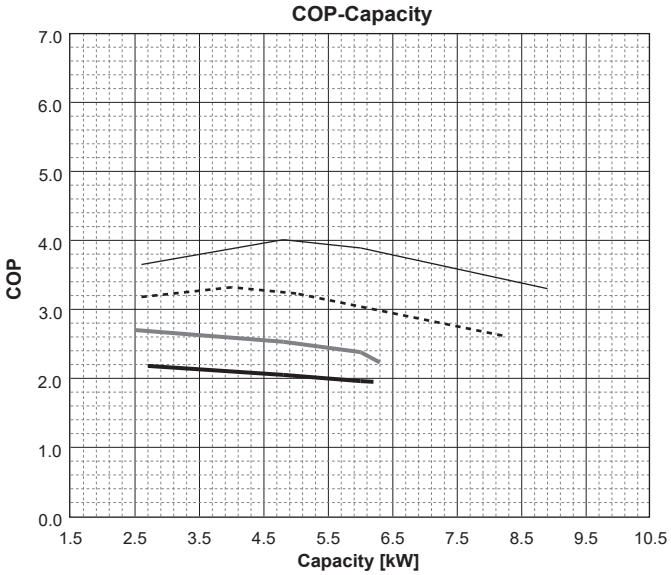


### ■ Water outlet temperature 55 [°C ]

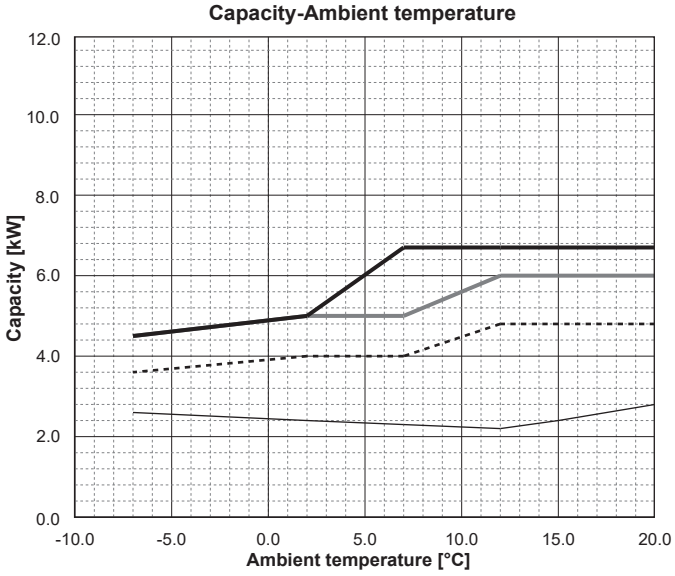


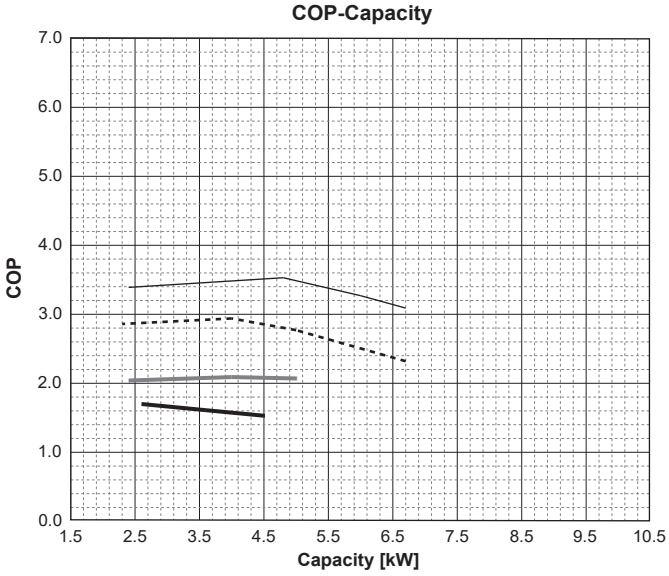

## SUZ-SHWM60VAH(-SC)

### ■ Water outlet temperature 35 [°C ]

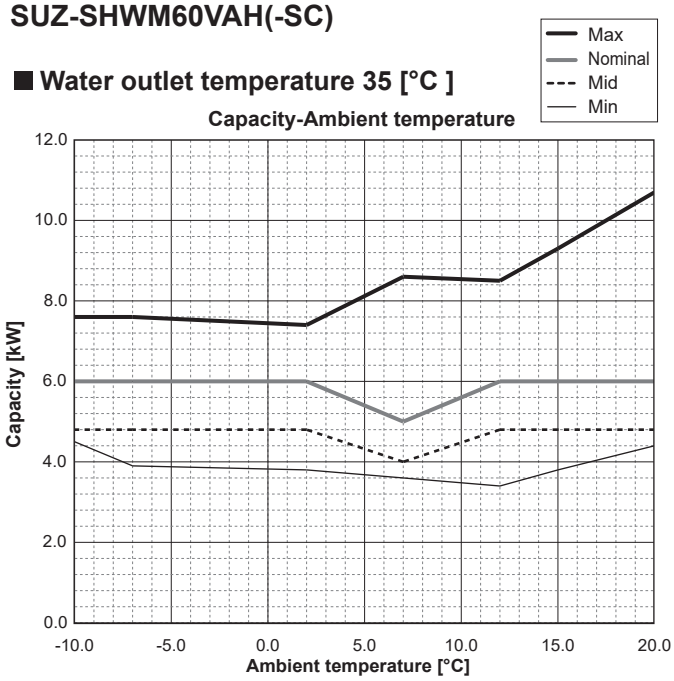


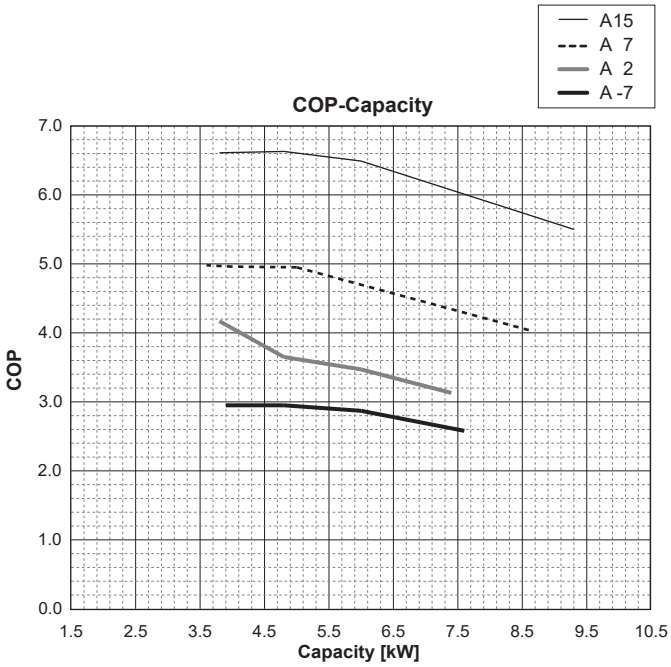


### ■ Water outlet temperature 45 [°C ]

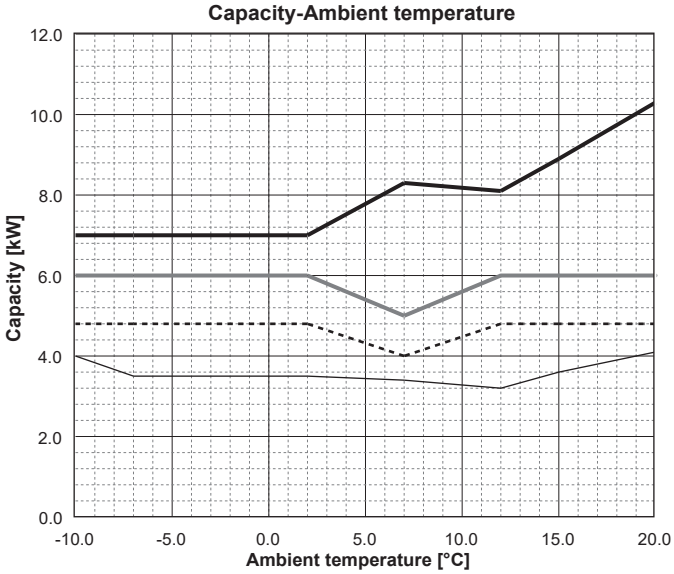


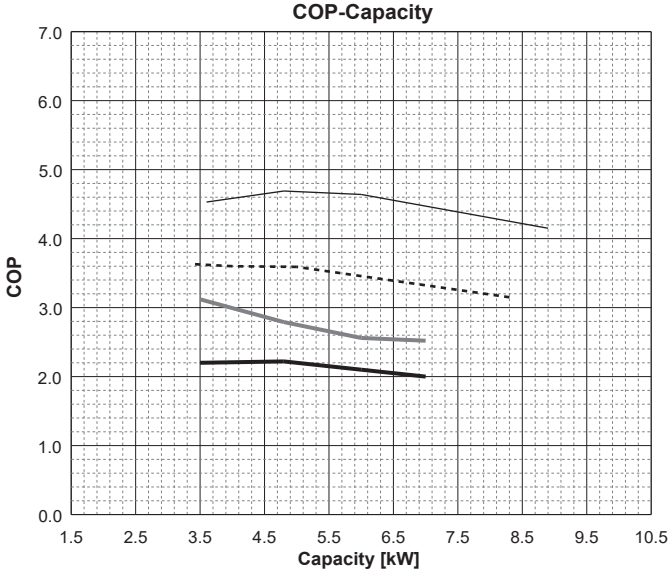


### ■ Water outlet temperature 55 [°C ]

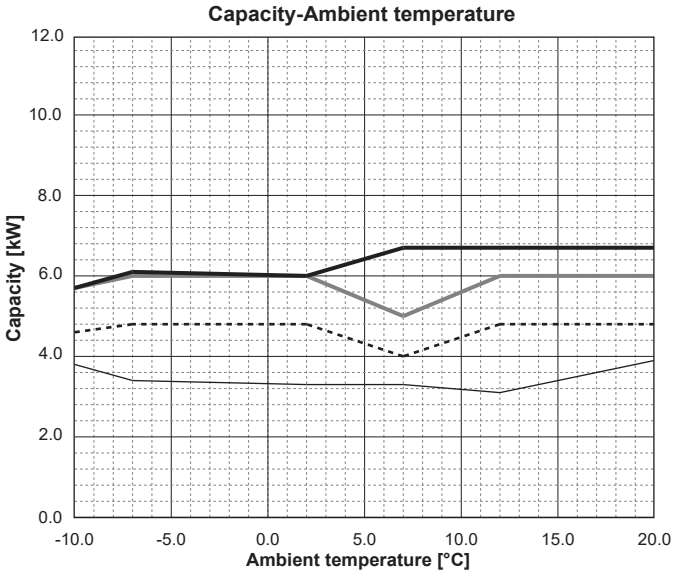


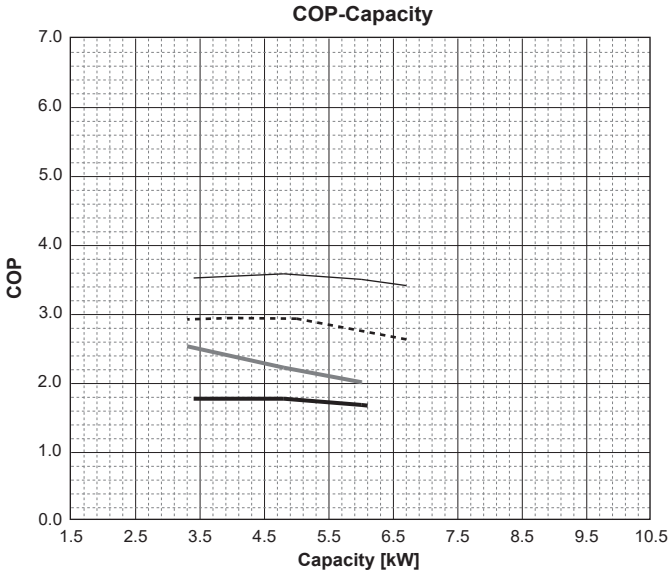

## SUZ-SWM80VA2

### ■ Water outlet temperature 35 [°C ]

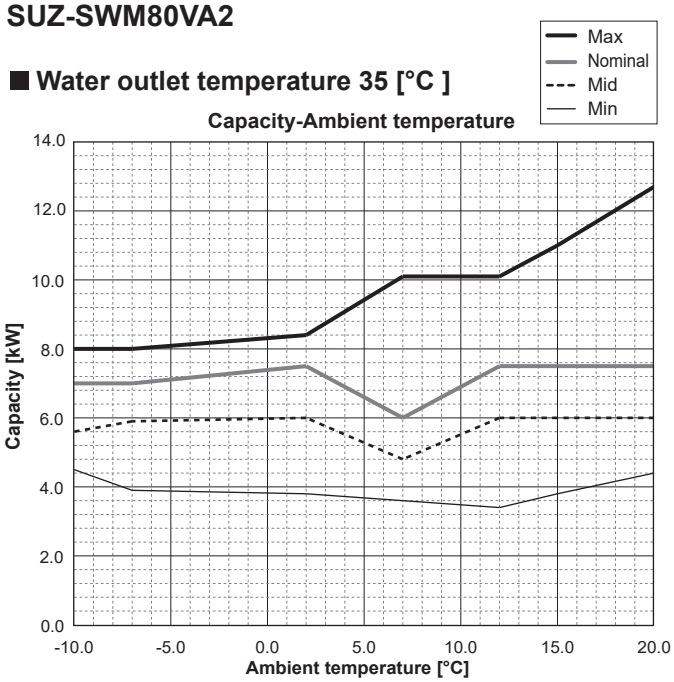


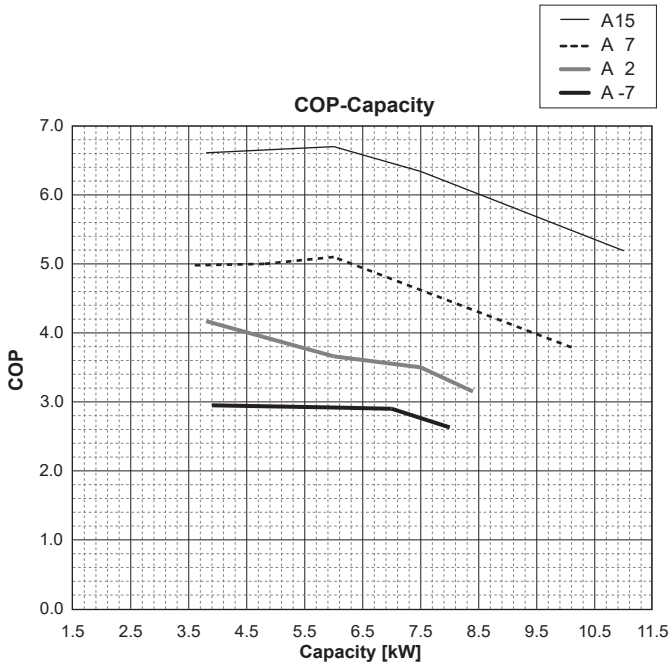


### ■ Water outlet temperature 45 [°C ]

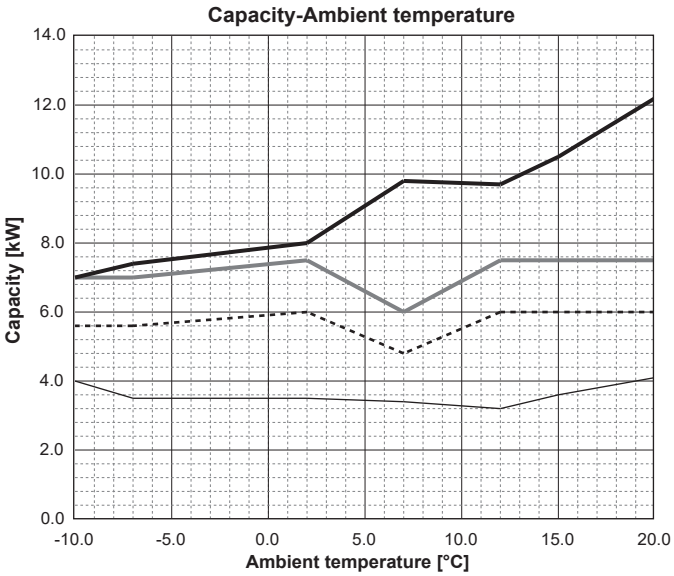


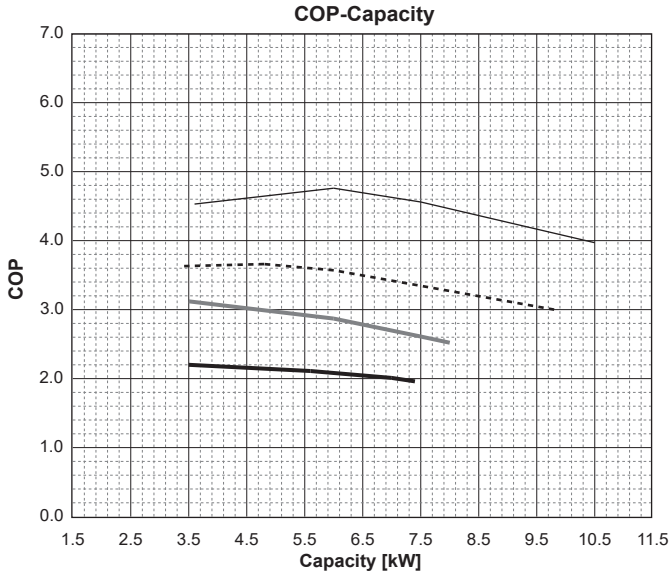


### ■ Water outlet temperature 55 [°C ]

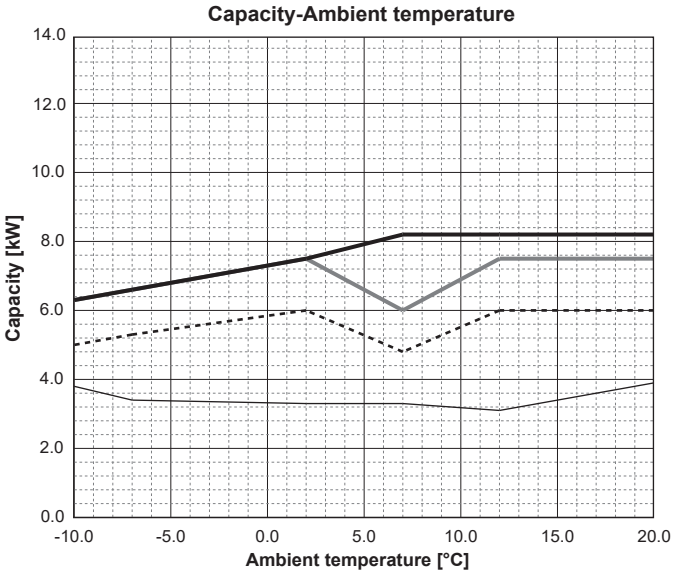


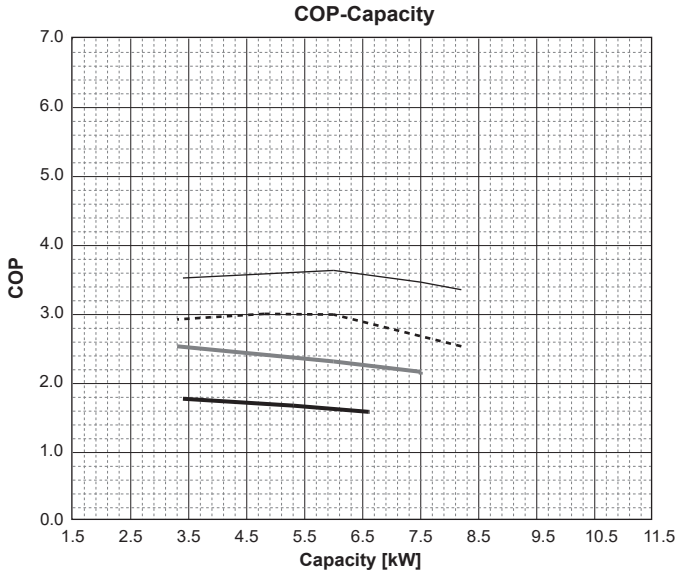

## SUZ-SWM80VAH2

### ■ Water outlet temperature 35 [°C ]

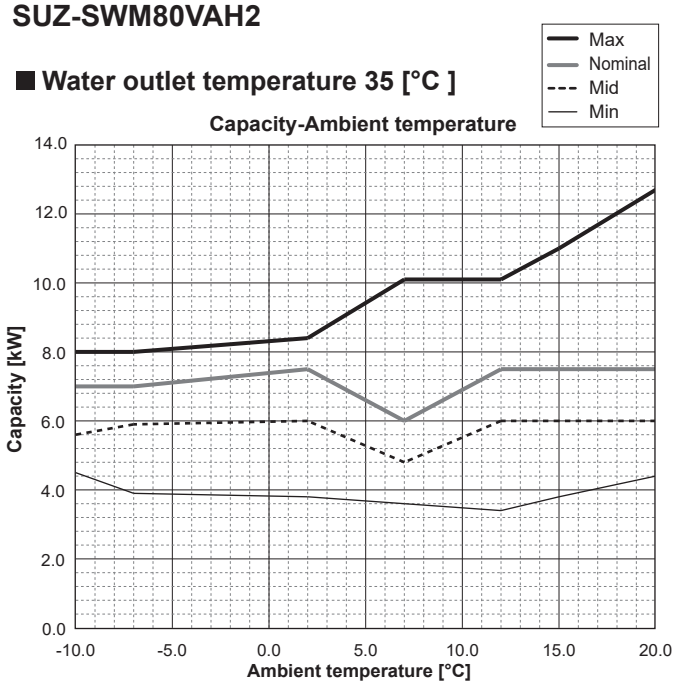


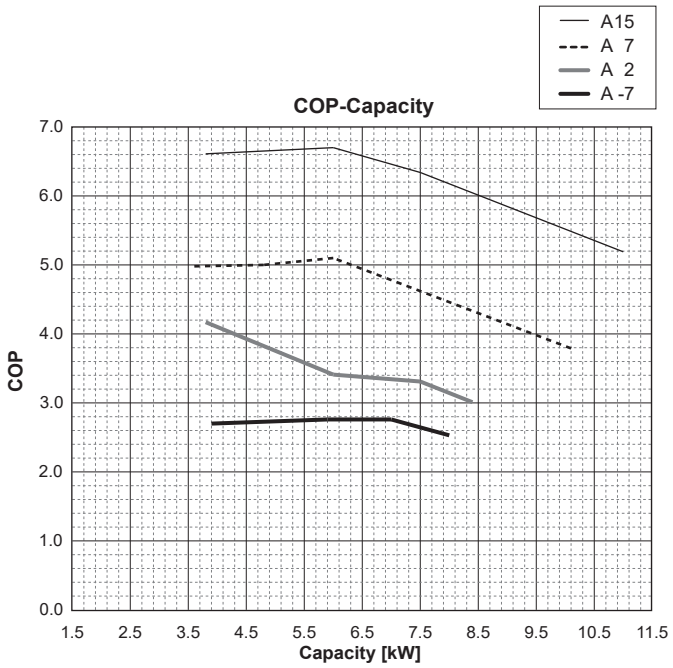


### ■ Water outlet temperature 45 [°C ]

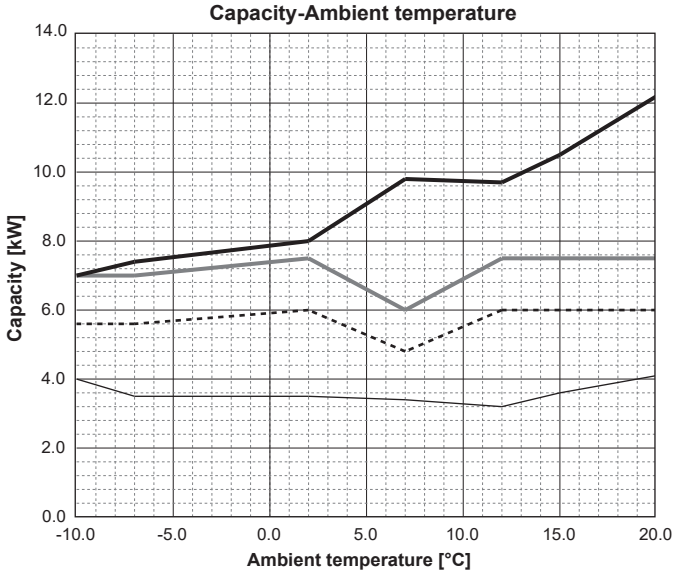


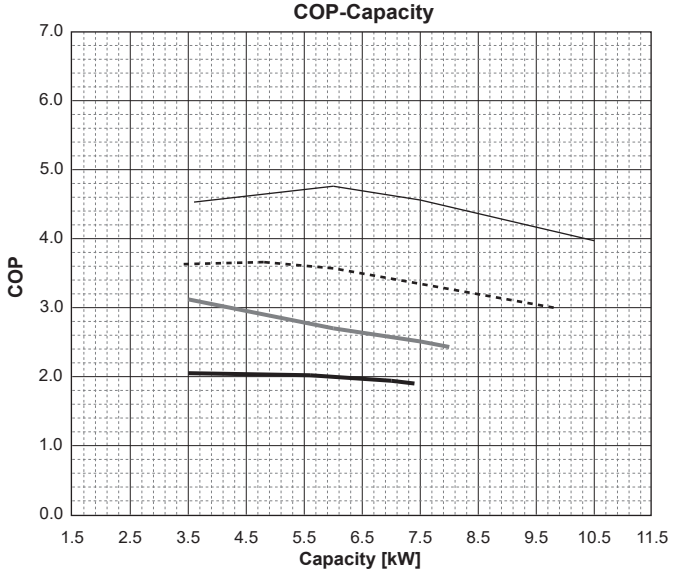


### ■ Water outlet temperature 55 [°C ]

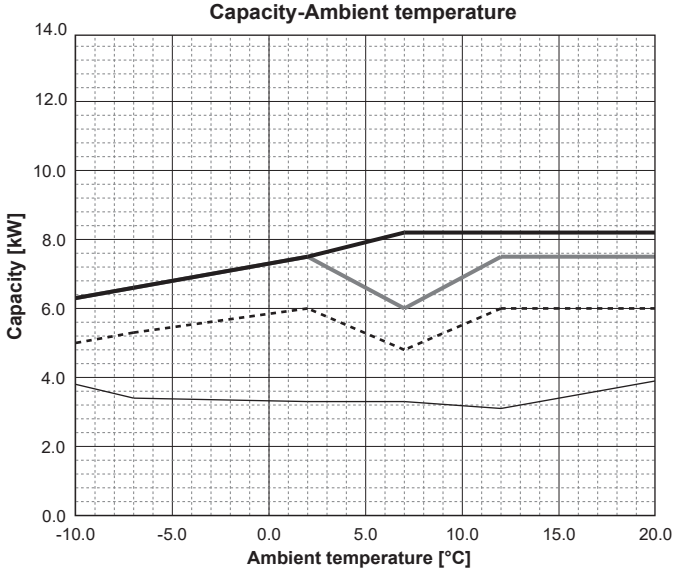


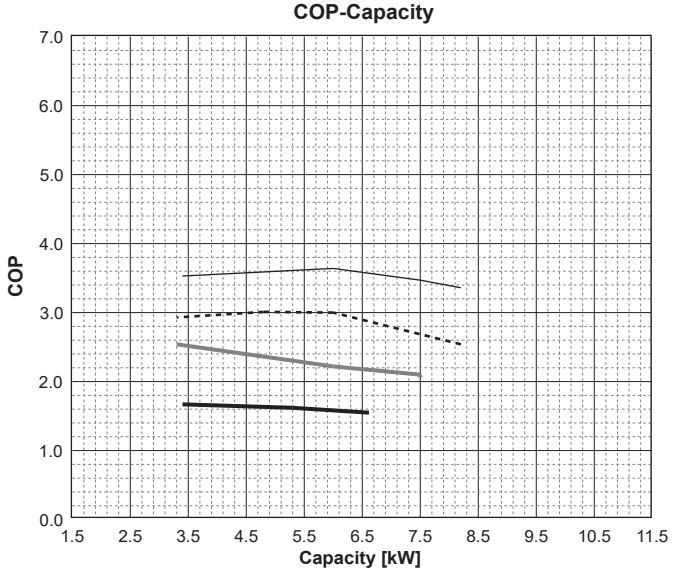

## SUZ-SWM100VA

### ■ Water outlet temperature 35 [°C ]

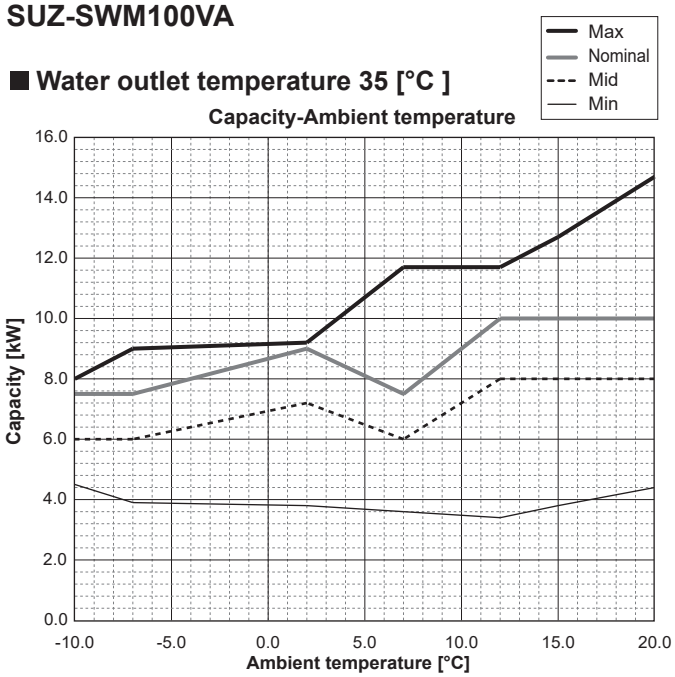


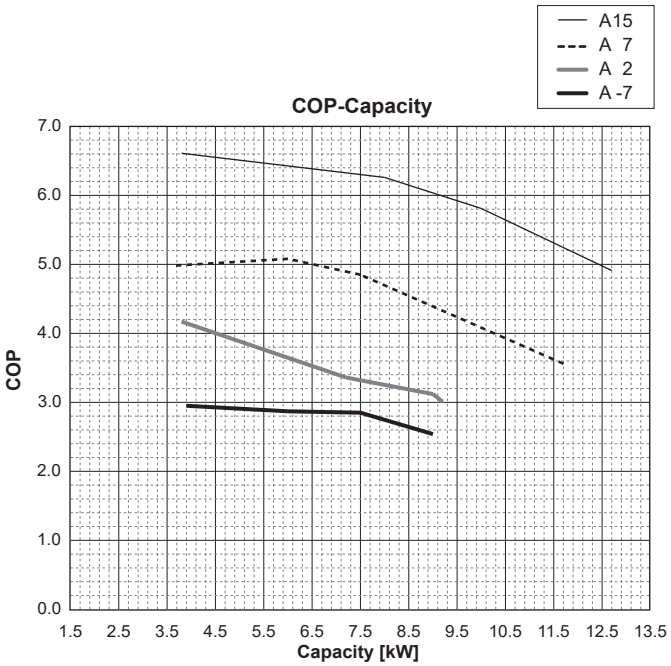


### ■ Water outlet temperature 45 [°C ]

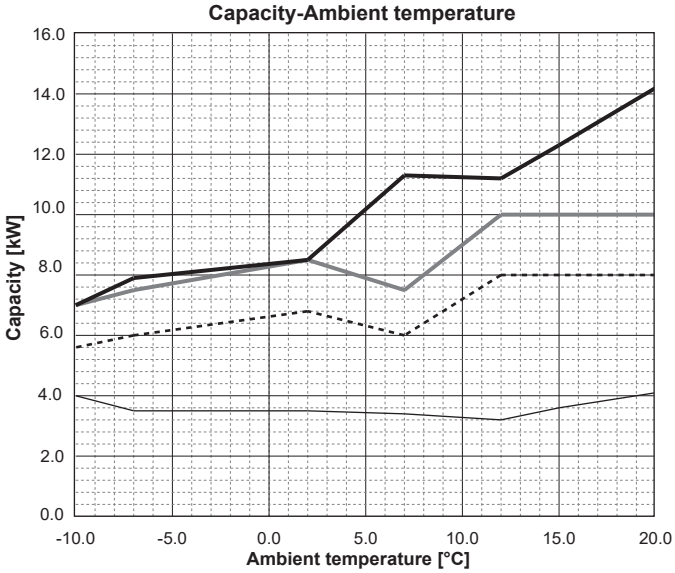


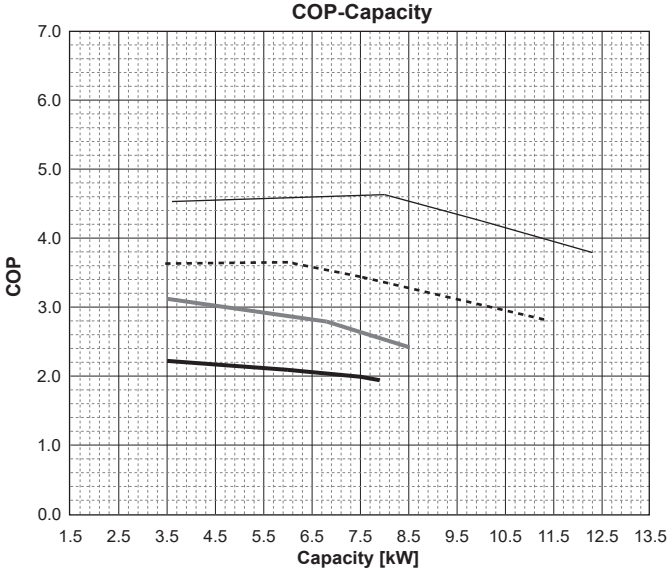


### ■ Water outlet temperature 55 [°C ]

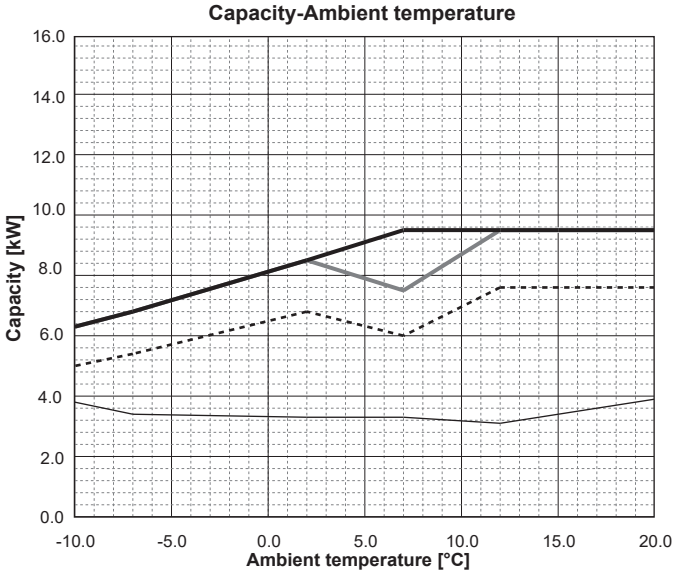


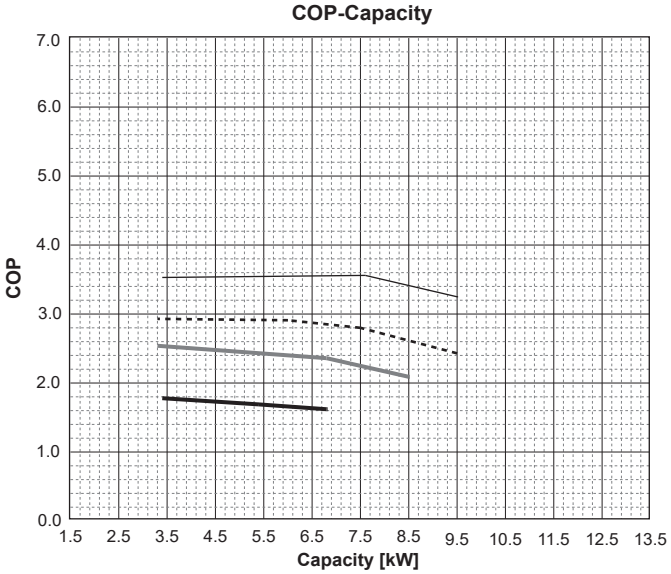

## SUZ-SWM100VAH

### ■ Water outlet temperature 35 [°C ]

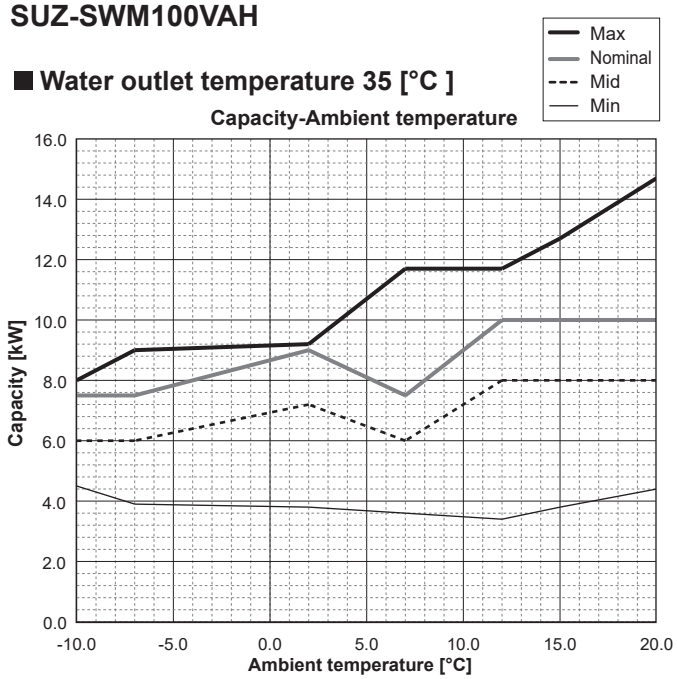


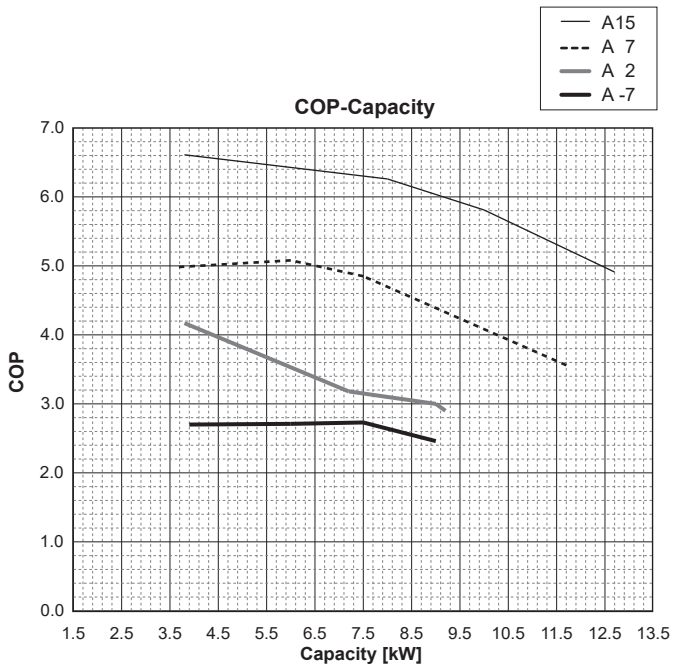


### ■ Water outlet temperature 45 [°C ]

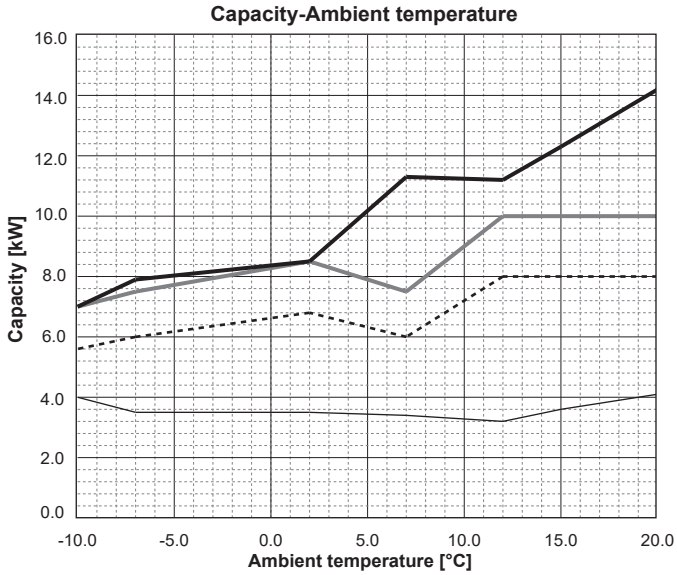


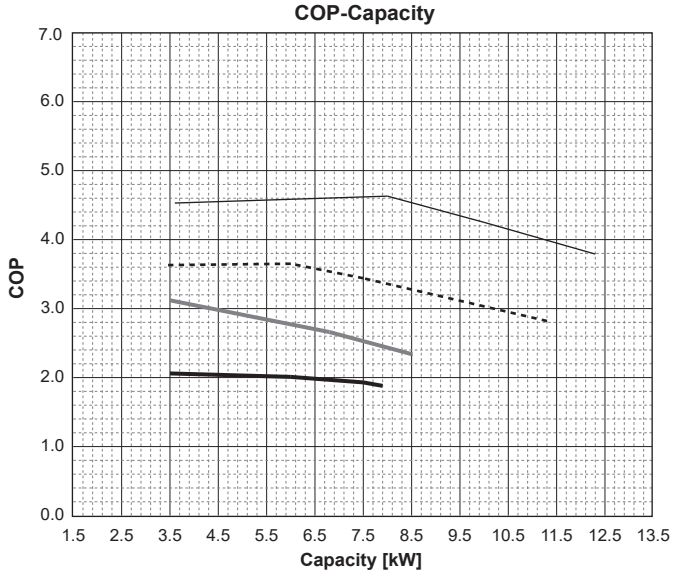


### ■ Water outlet temperature 55 [°C ]

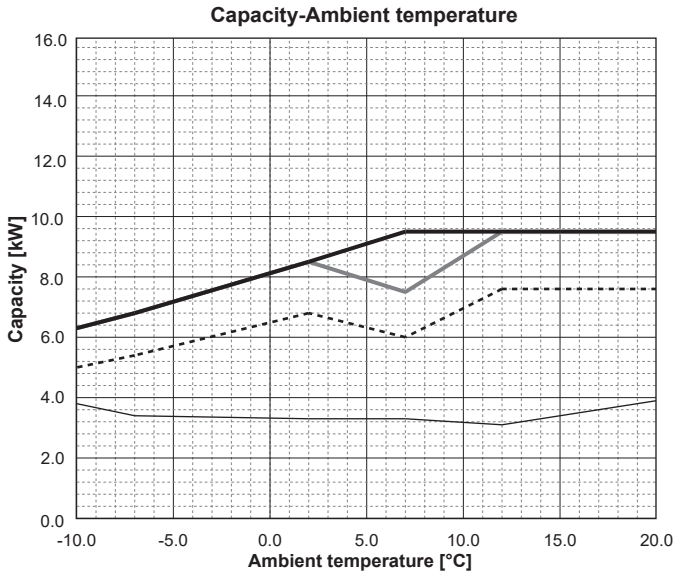


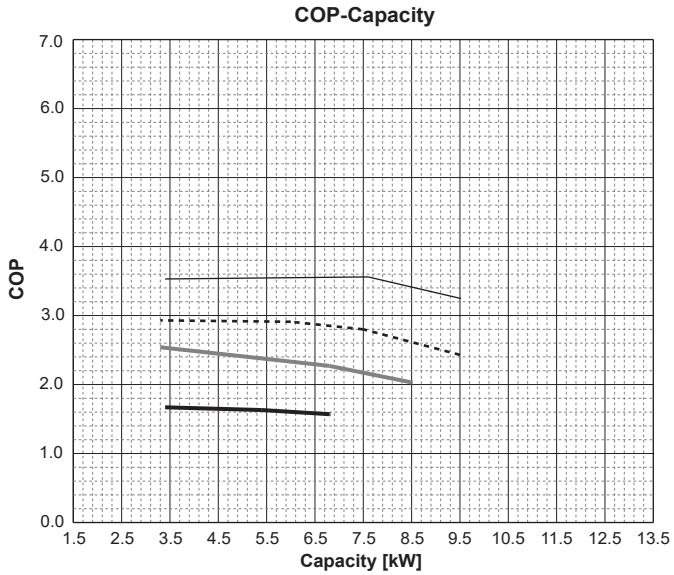

## PUZ-SWM60VAA

### ■ Water outlet temperature 35 [°C ]

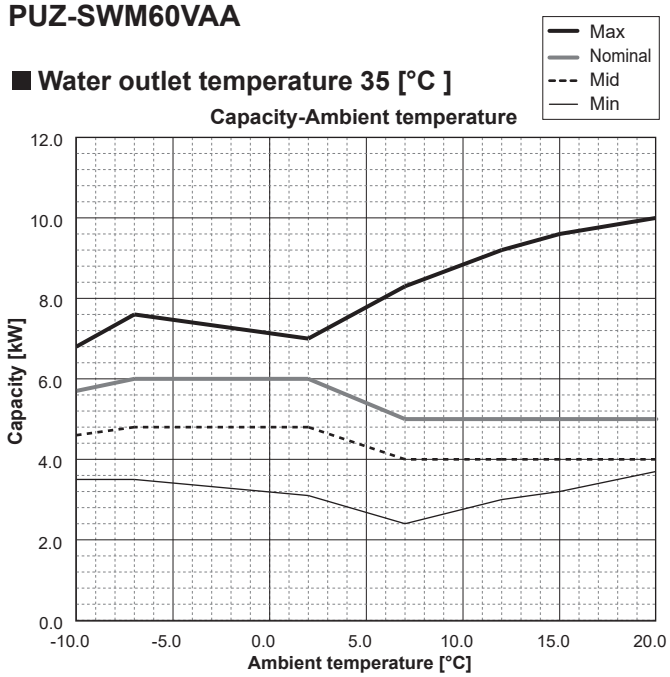


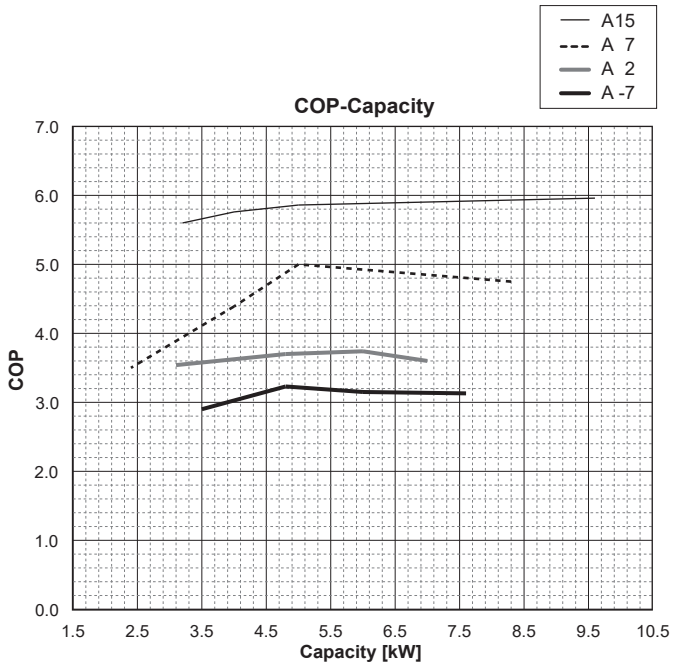


### ■ Water outlet temperature 45 [°C ]

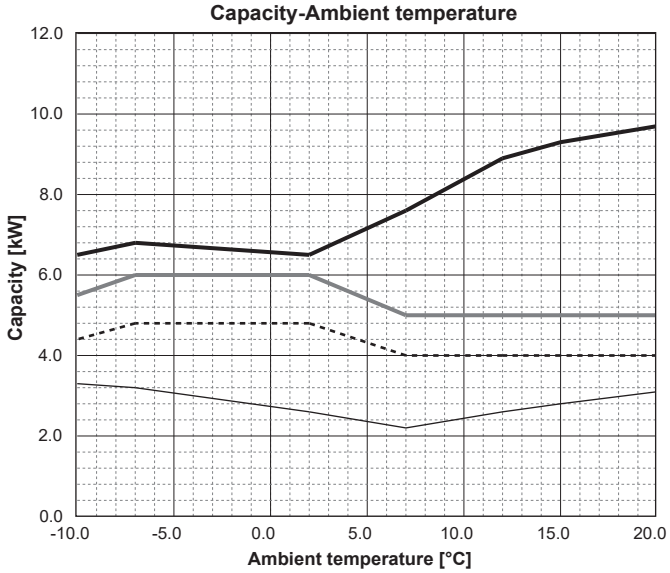


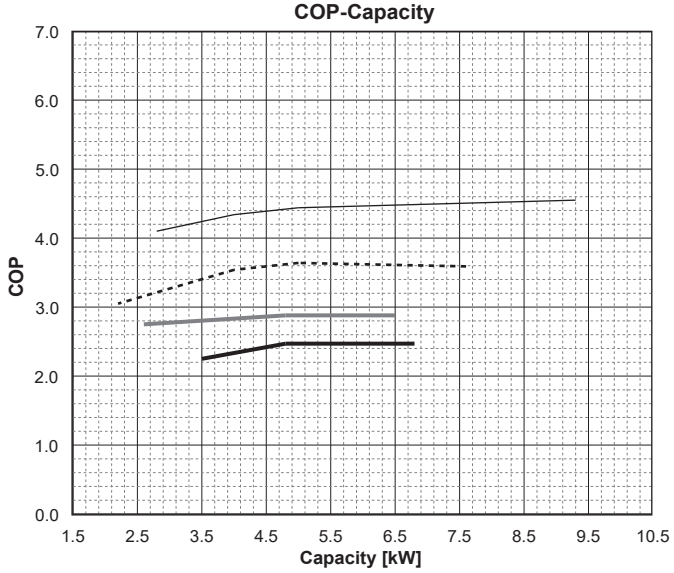


### ■ Water outlet temperature 55 [°C ]

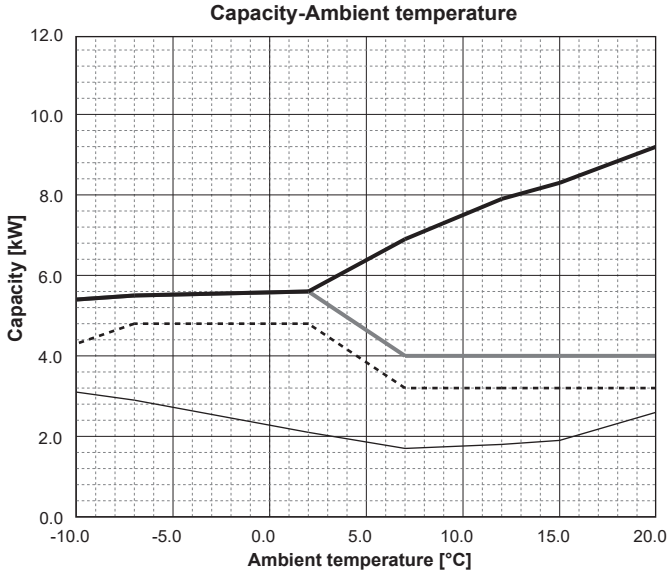


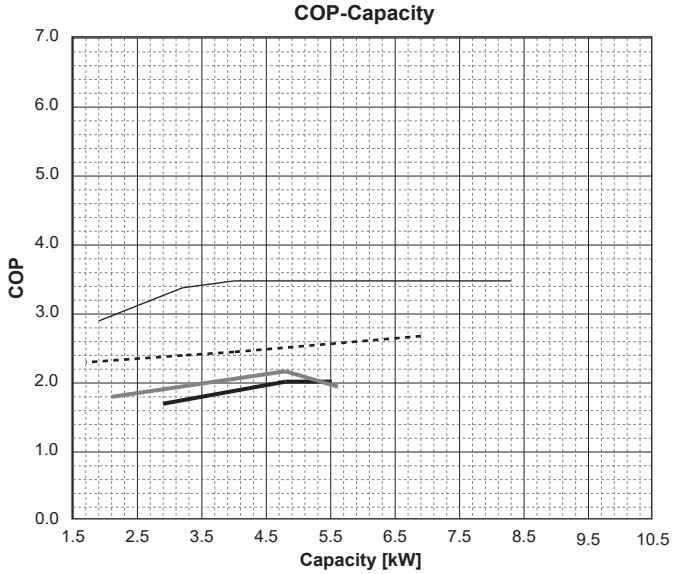

## PUZ-SWM80VAA PUZ-SWM80YAA

### ■ Water outlet temperature 35 [°C ]

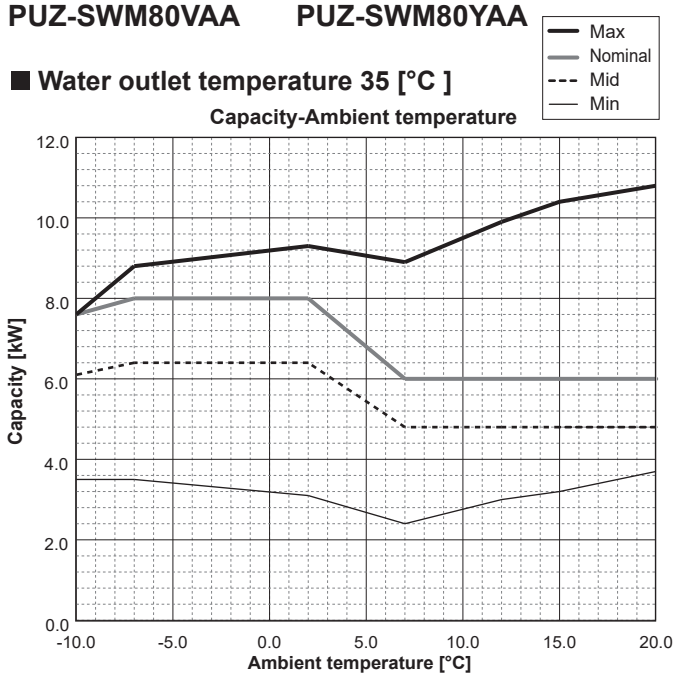


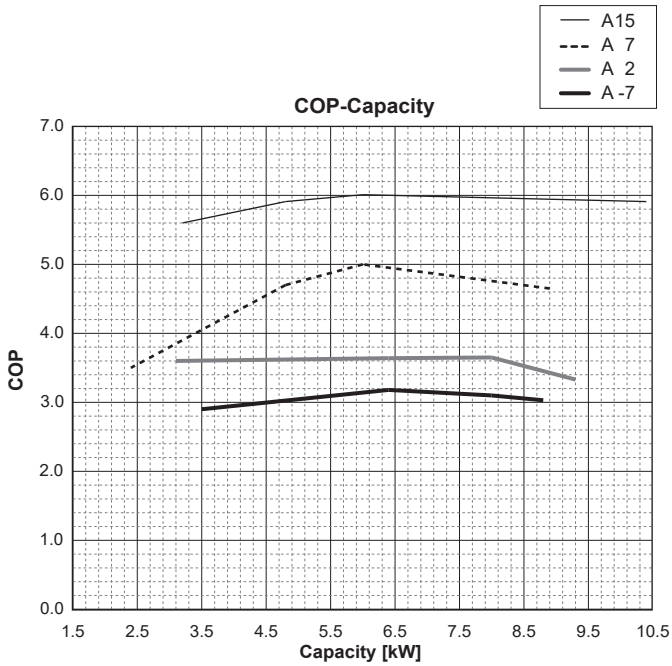


### ■ Water outlet temperature 45 [°C ]

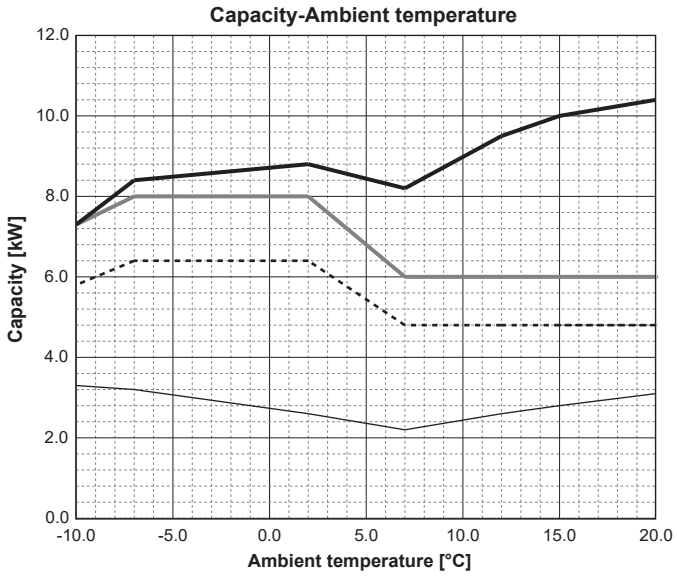


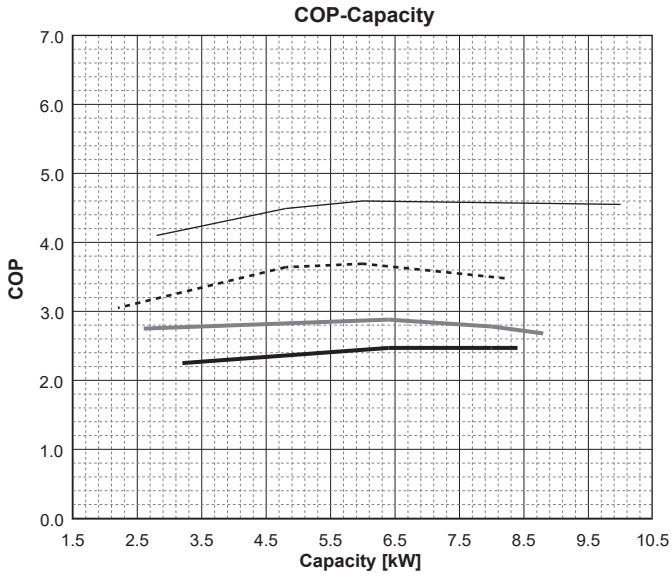


### ■ Water outlet temperature 55 [°C ]

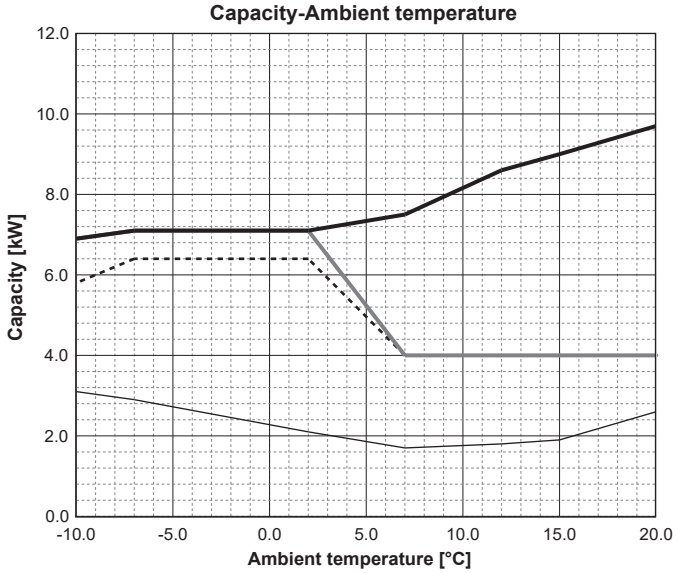


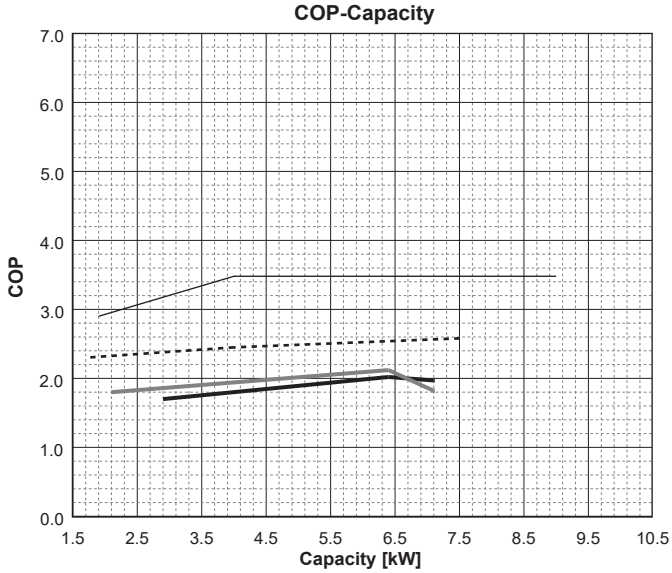

## PUZ-SWM100VAA PUZ-SWM100YAA

### ■ Water outlet temperature 35 [°C ]

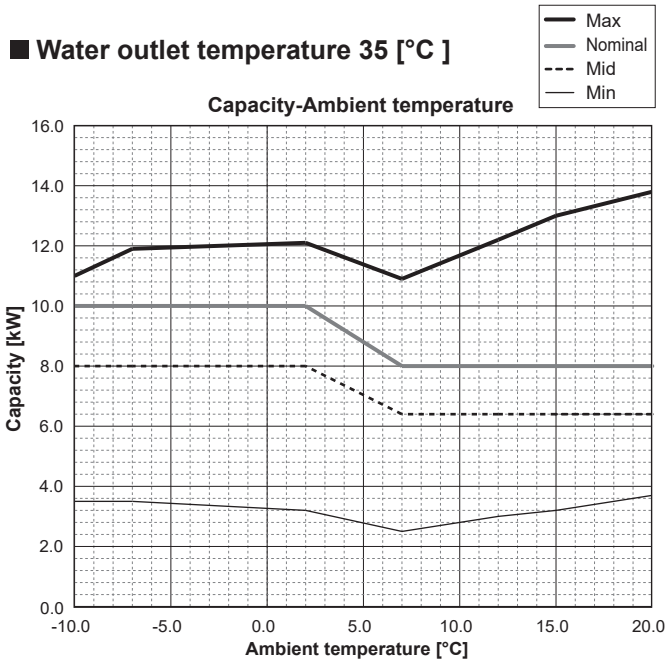


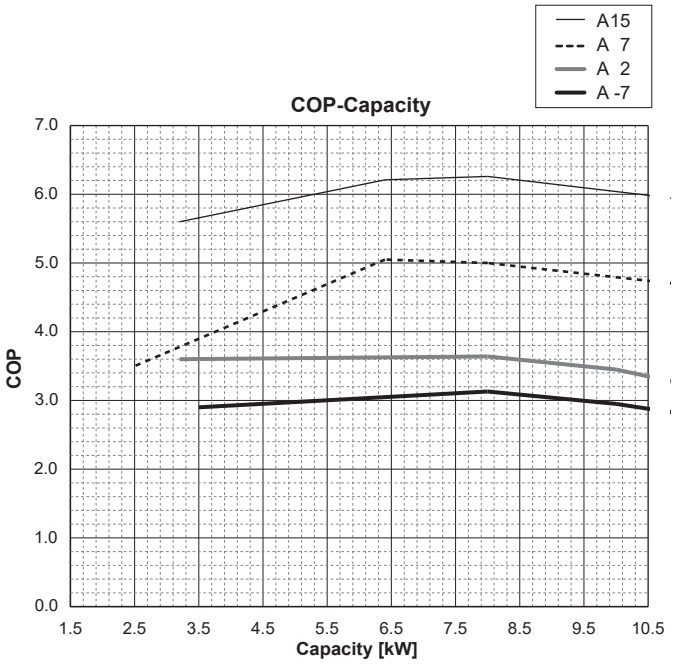


### ■ Water outlet temperature 45 [°C ]

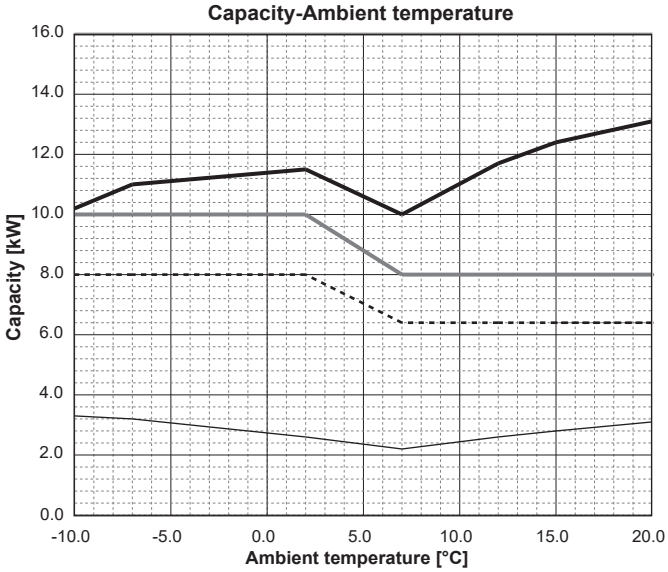


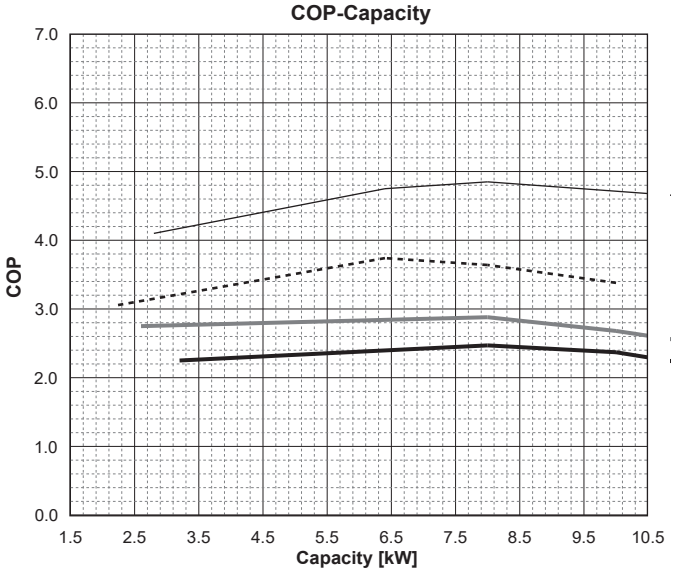


### ■ Water outlet temperature 55 [°C ]

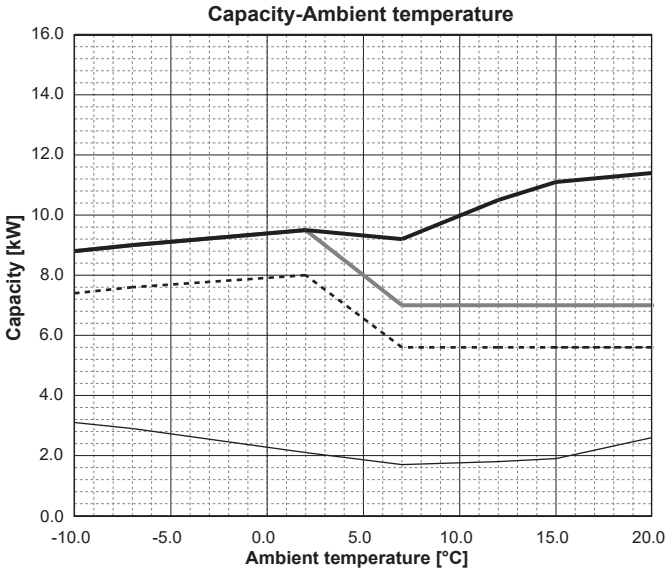


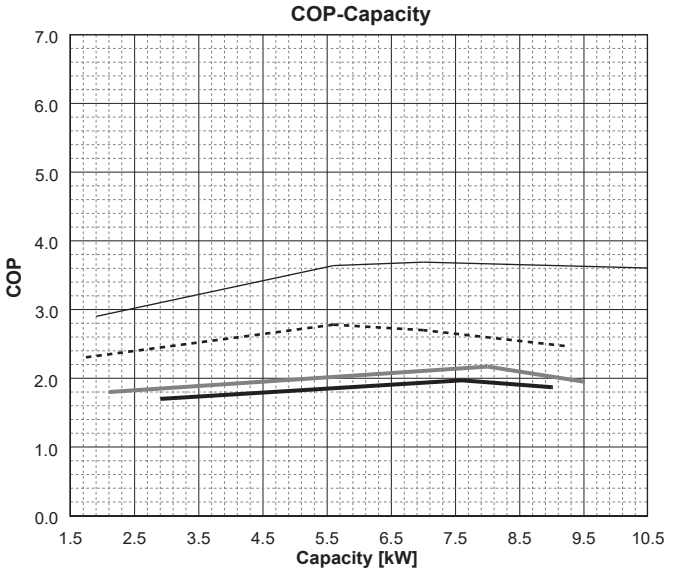

## PUZ-SWM120VAA PUZ-SWM120YAA

### ■ Water outlet temperature 35 [°C ]

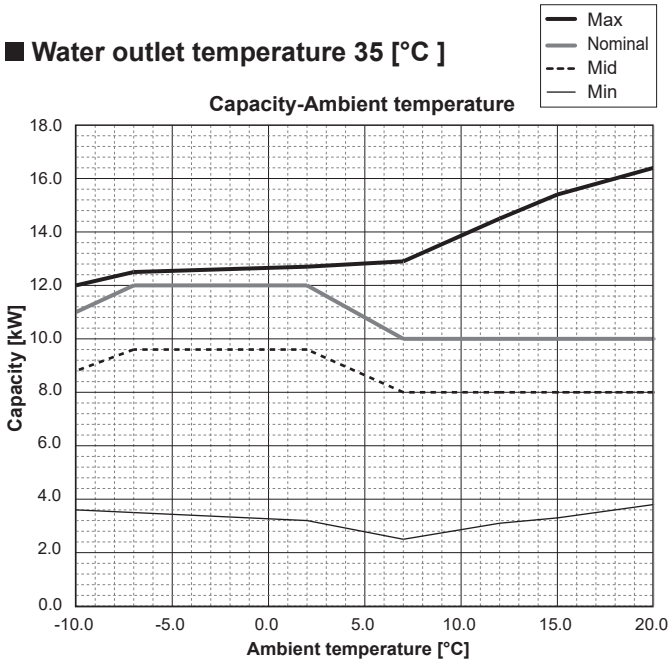


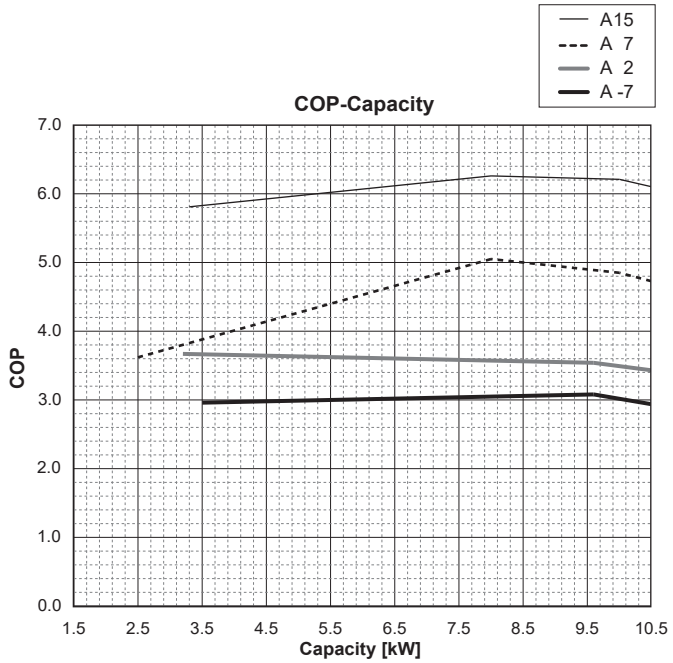


### ■ Water outlet temperature 45 [°C ]

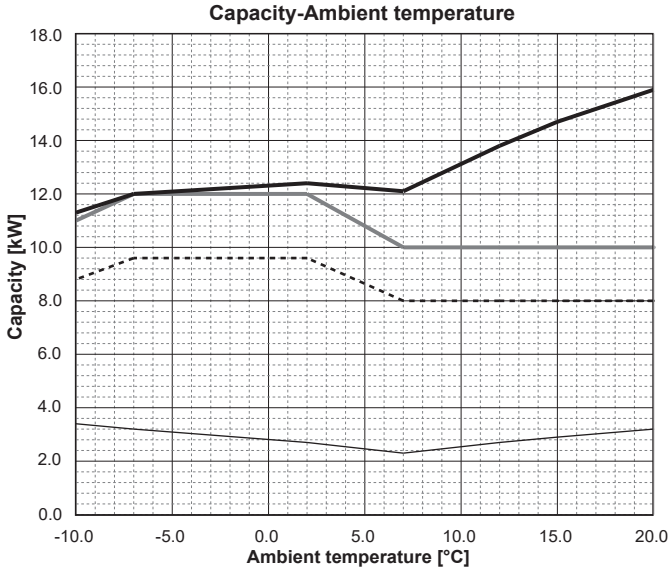


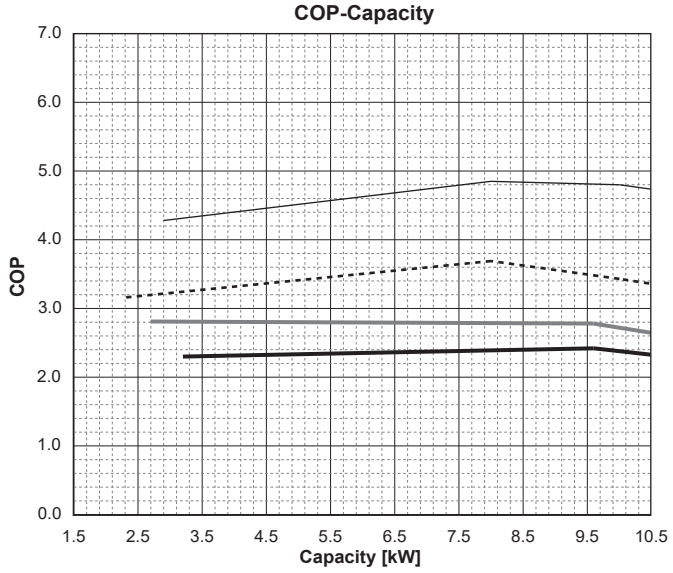


### ■ Water outlet temperature 55 [°C ]

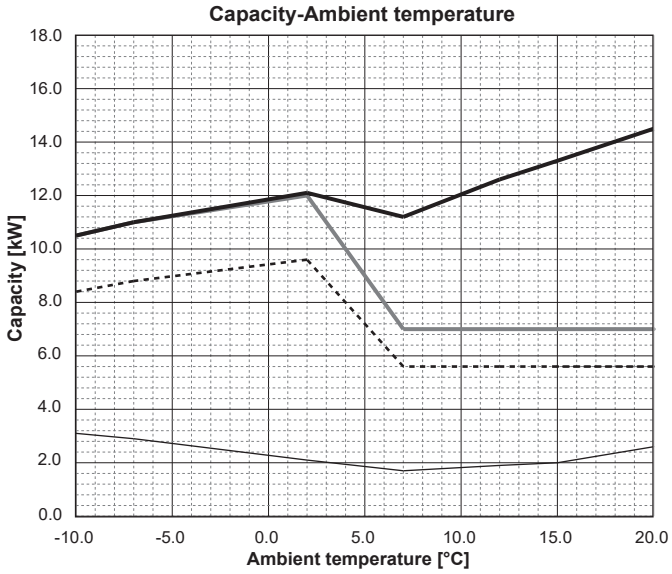


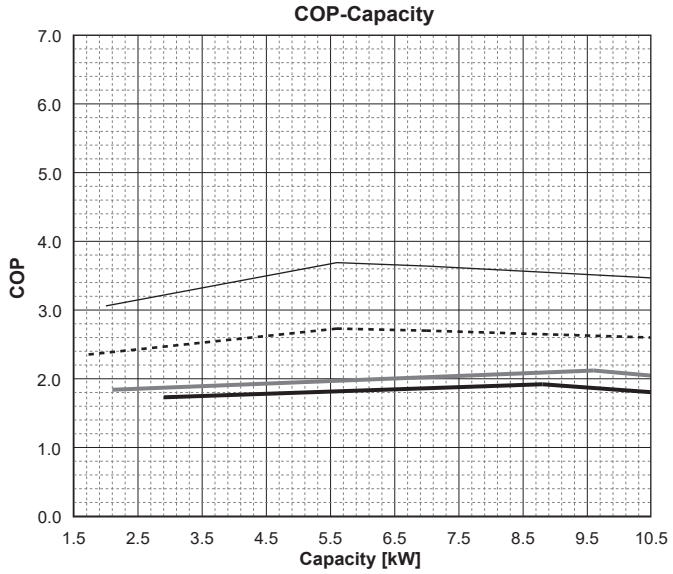

## PUZ-SWM140VAA PUZ-SWM140YAA

### ■ Water outlet temperature 35 [°C ]

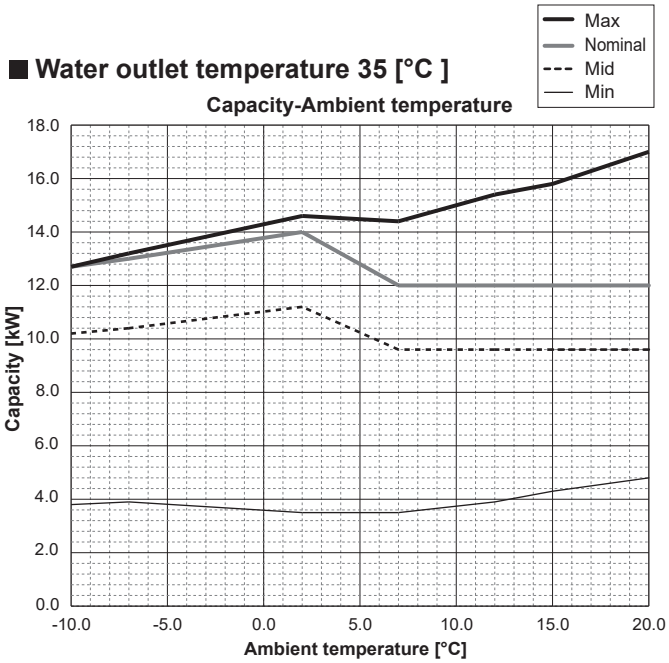


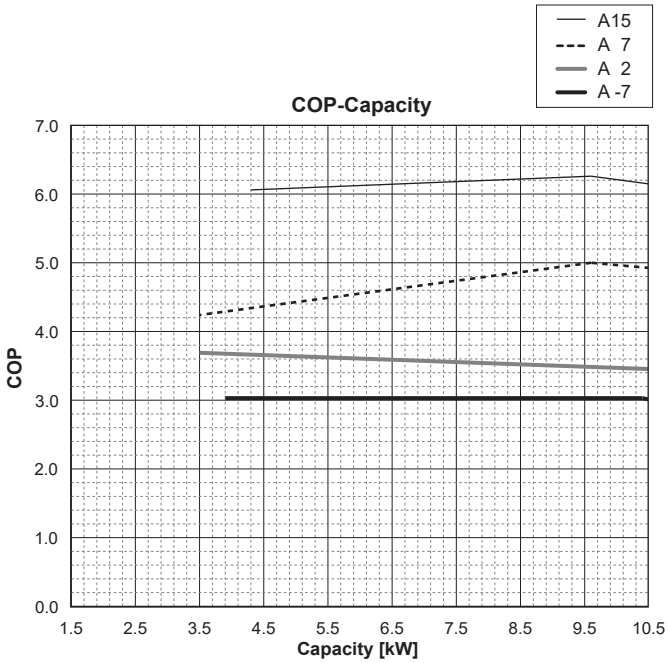


### ■ Water outlet temperature 45 [°C ]

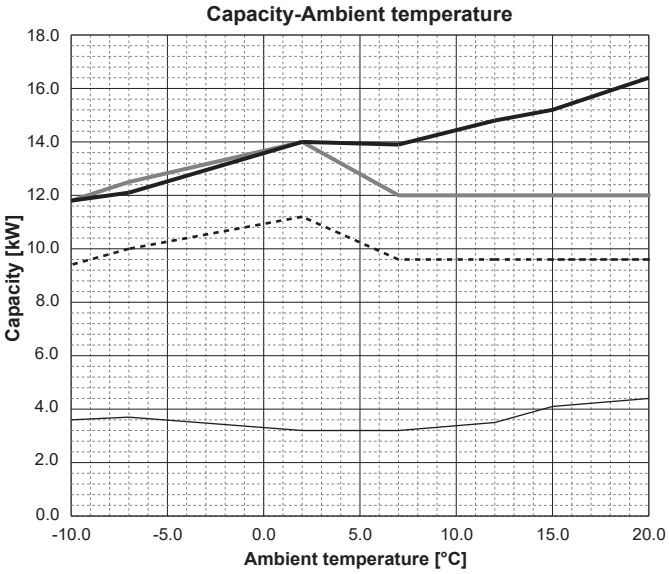


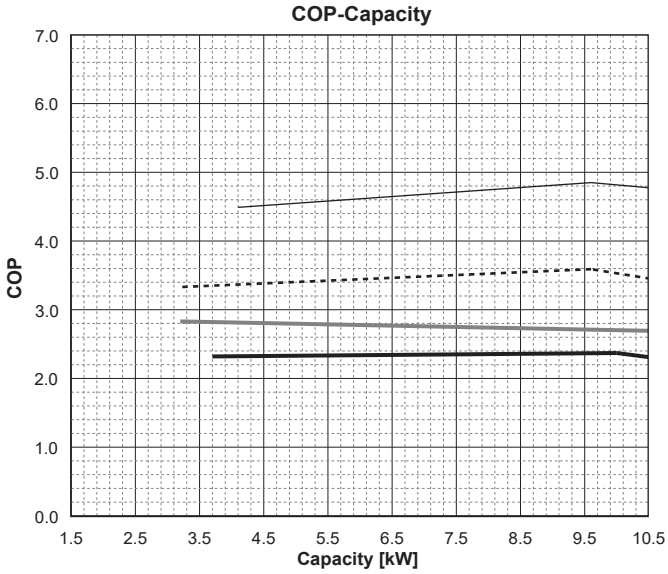


### ■ Water outlet temperature 55 [°C ]

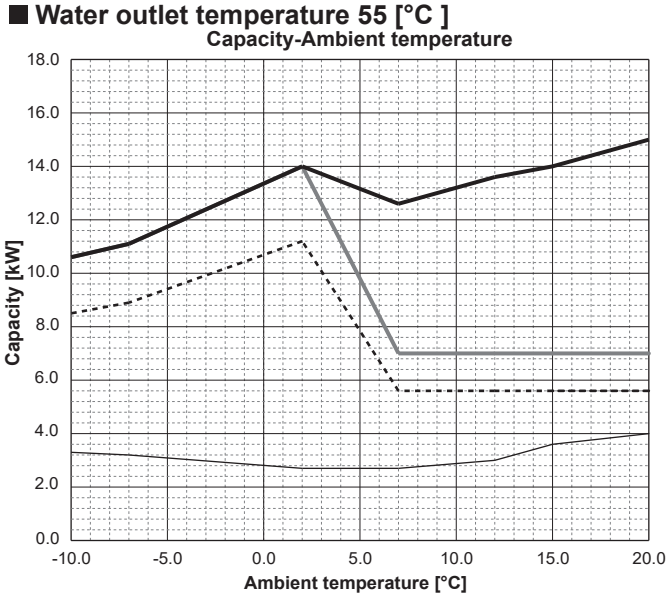


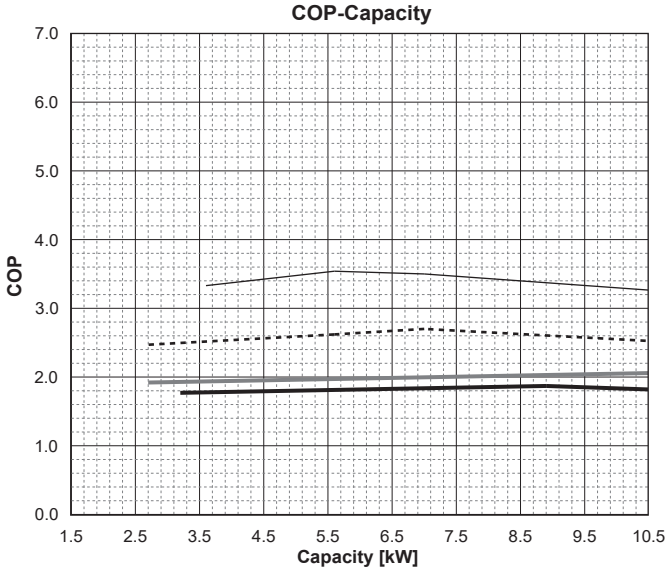

## PUZ-SHWM60VAA

### ■ Water outlet temperature 35 [°C ]

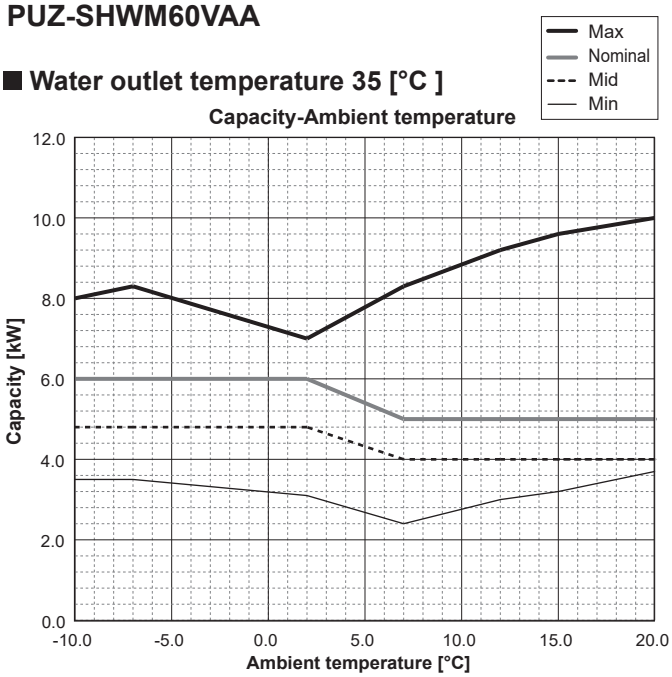


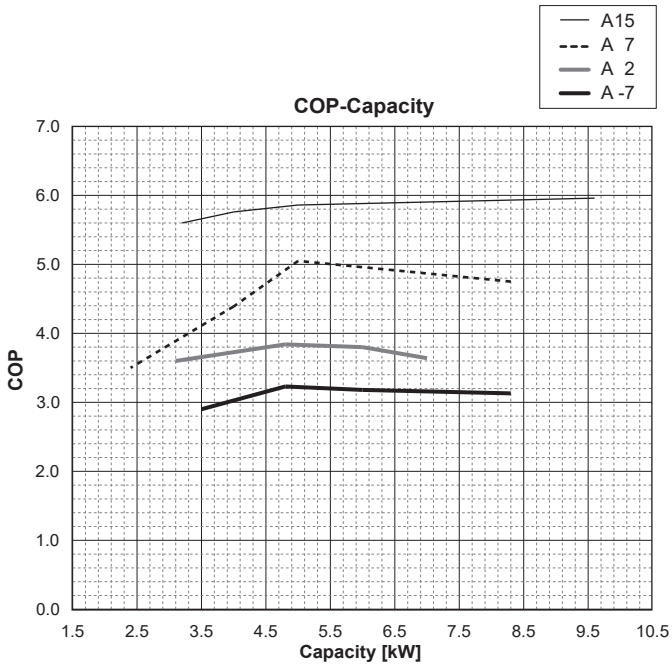


### ■ Water outlet temperature 45 [°C ]

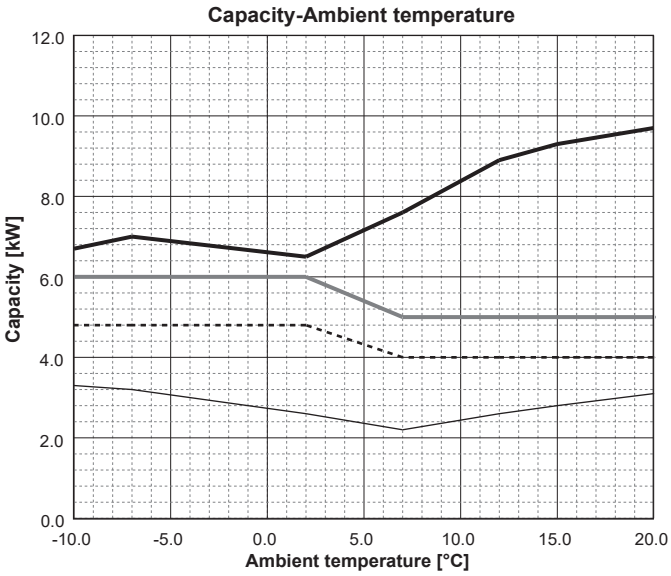


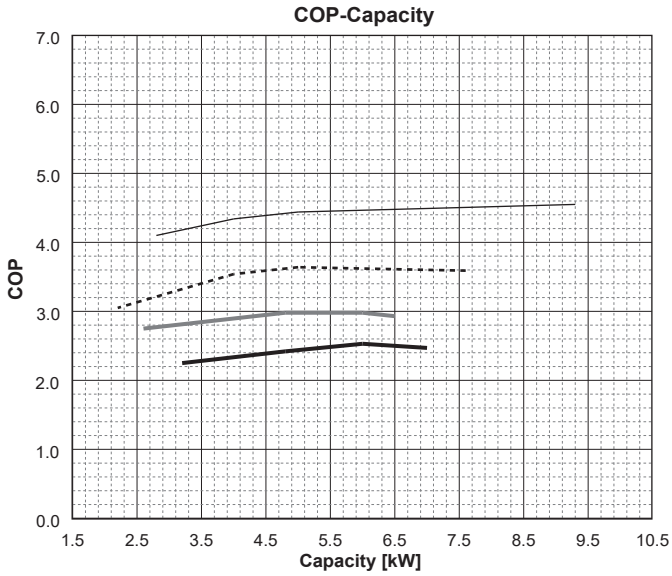


### ■ Water outlet temperature 55 [°C ]

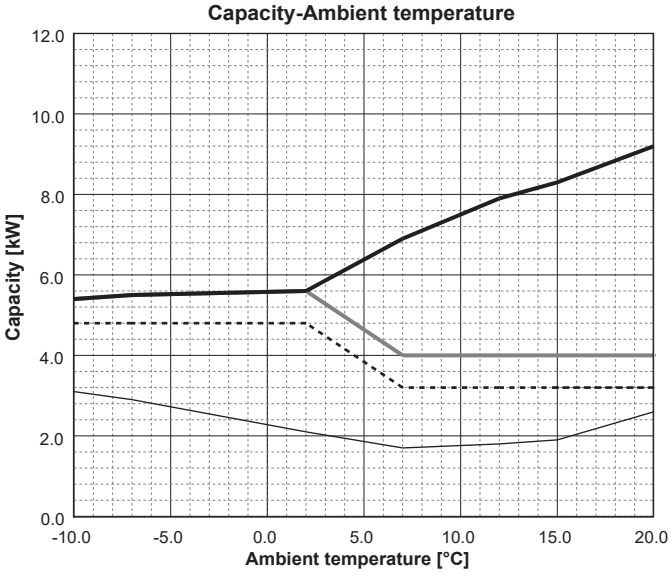


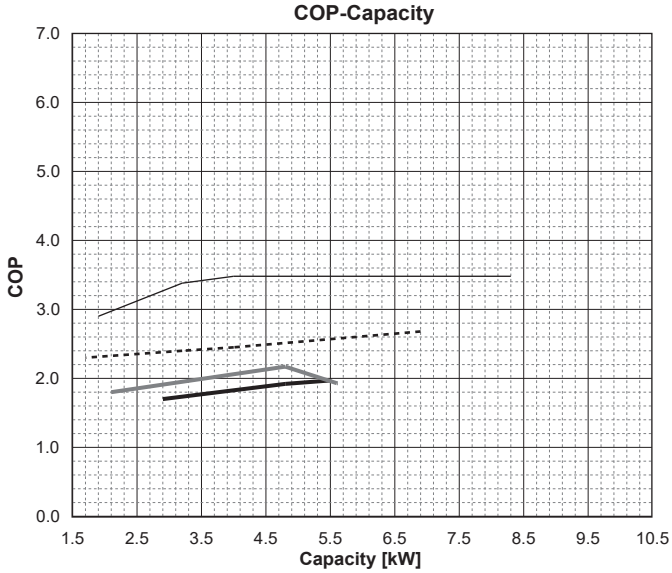

## PUZ-SHWM80VAA PUZ-SHWM80YAA

### ■ Water outlet temperature 35 [°C ]

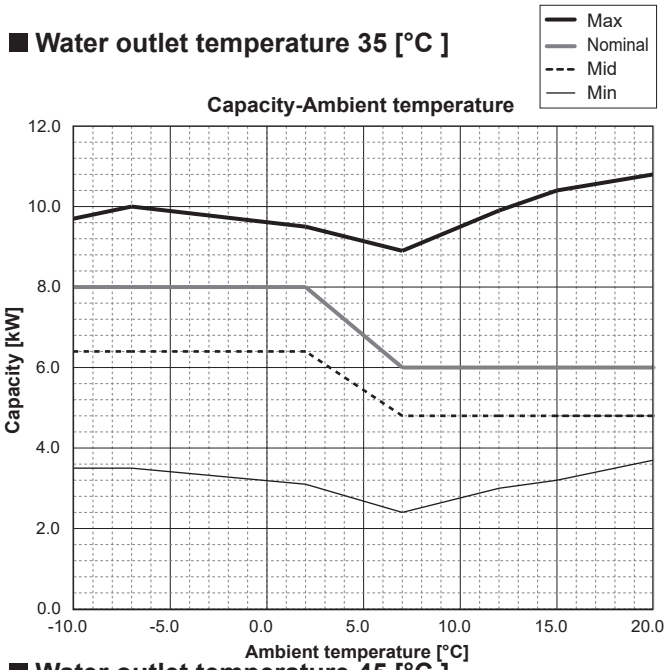


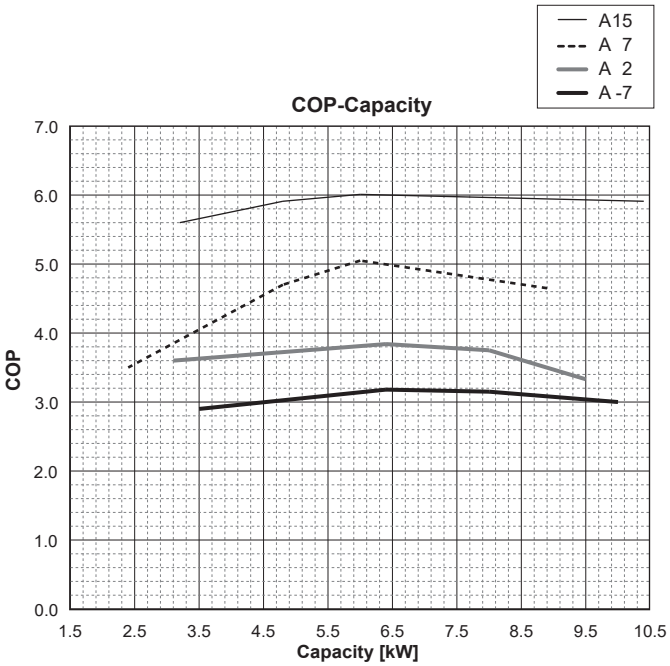


### ■ Water outlet temperature 45 [°C ]

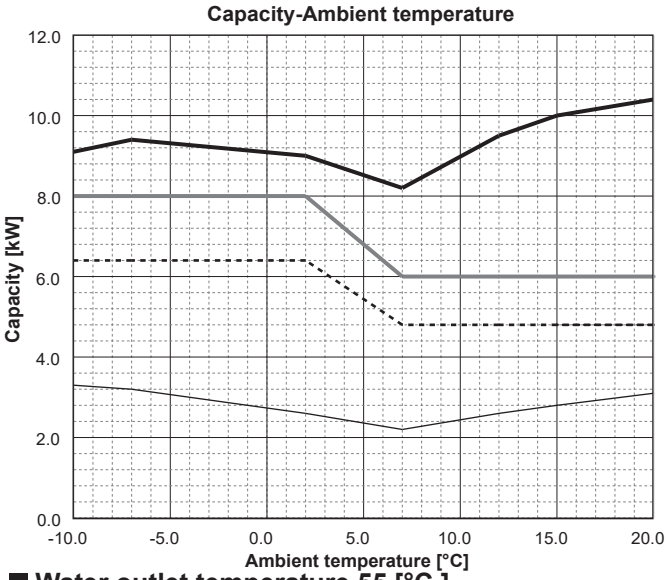


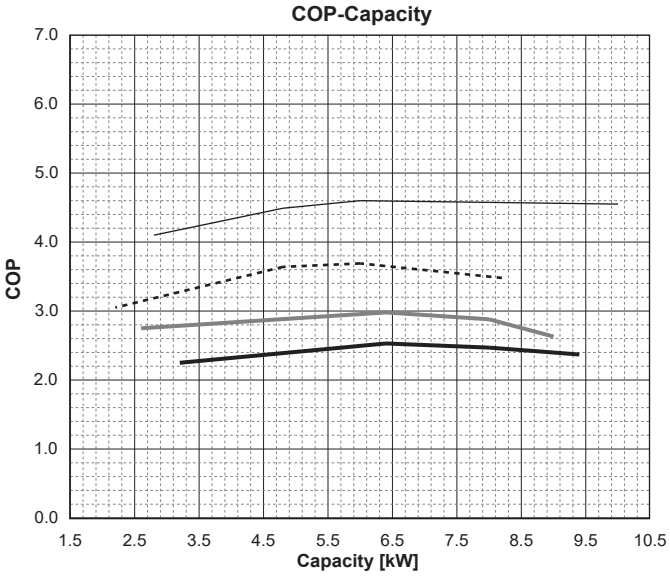


### ■ Water outlet temperature 55 [°C ]

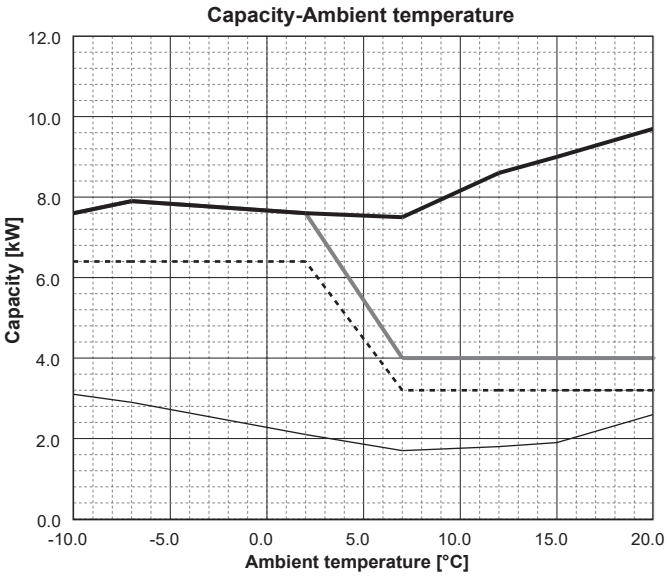


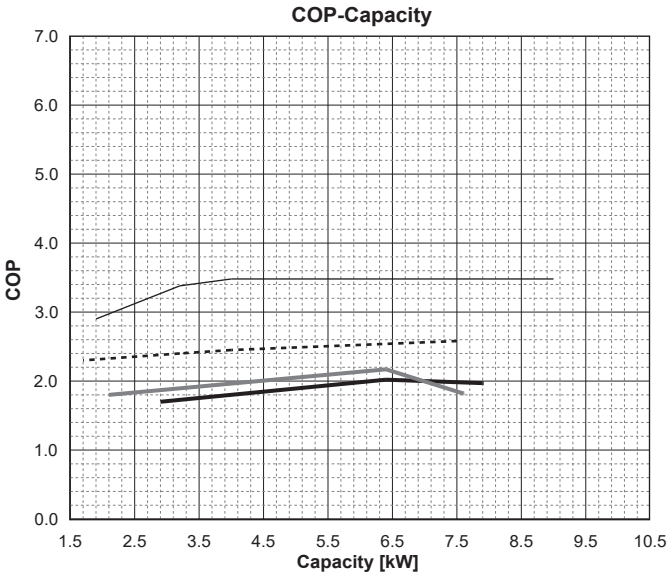

**PUZ-SHWM100VAA** **PUZ-SHWM100YAA**

## ■ Water outlet temperature 35 [°C ]

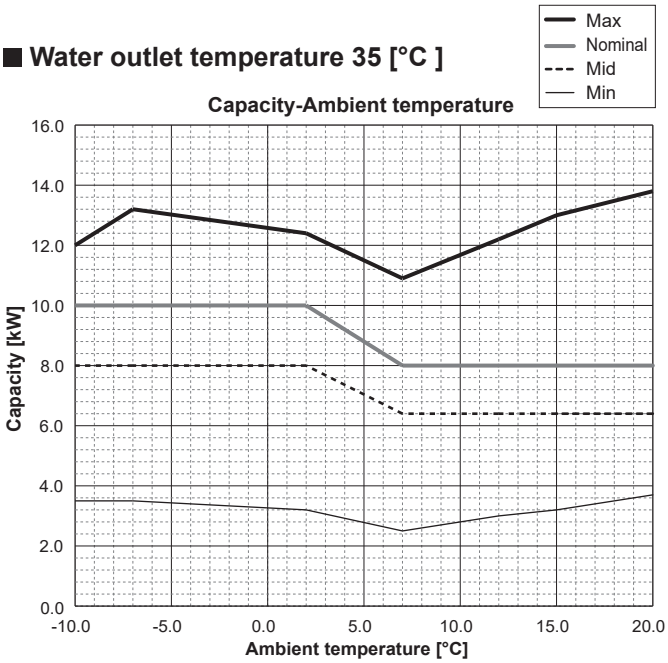


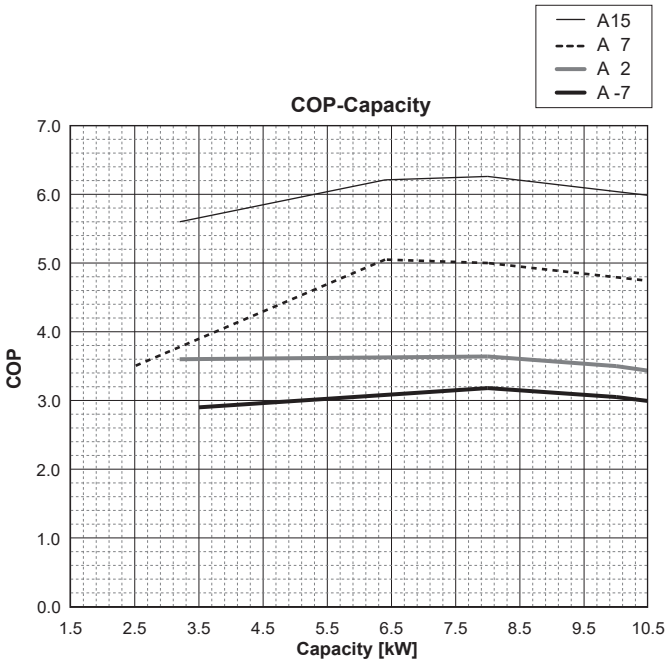


## ■ Water outlet temperature 45 [°C ]

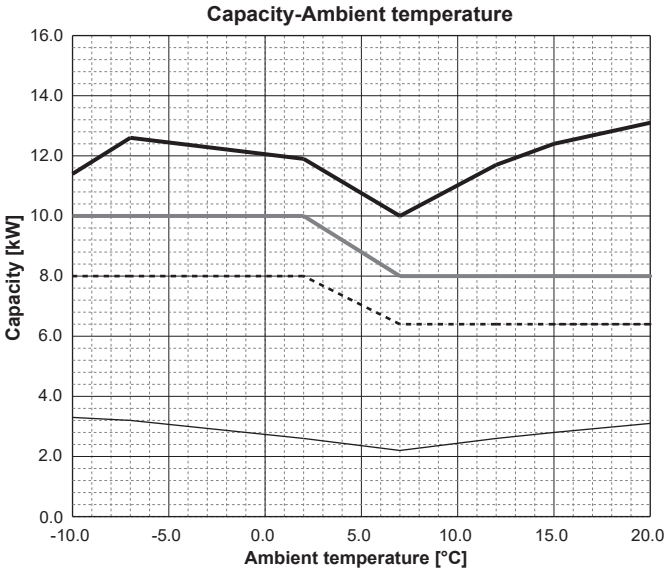


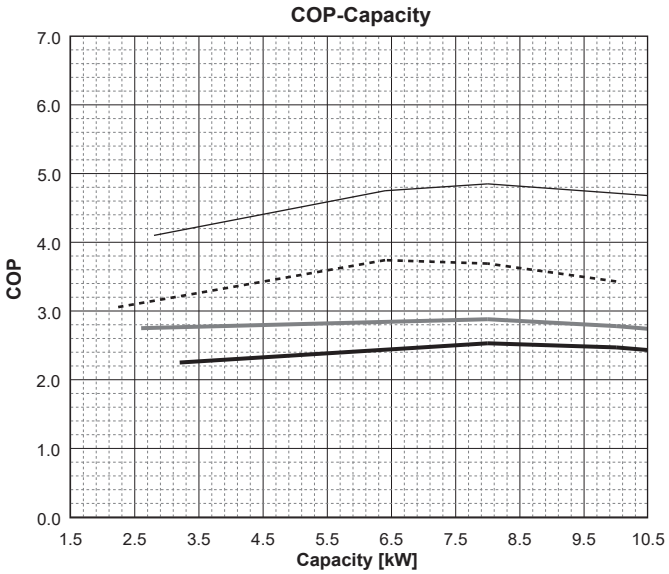


## ■ Water outlet temperature 55 [°C ]

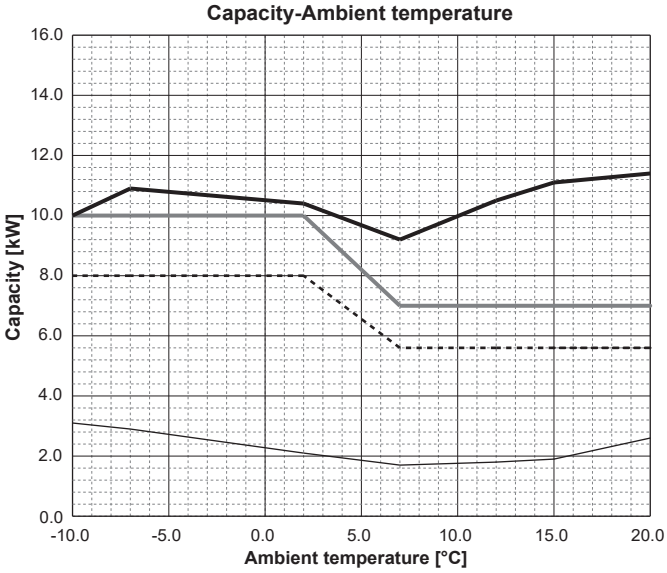


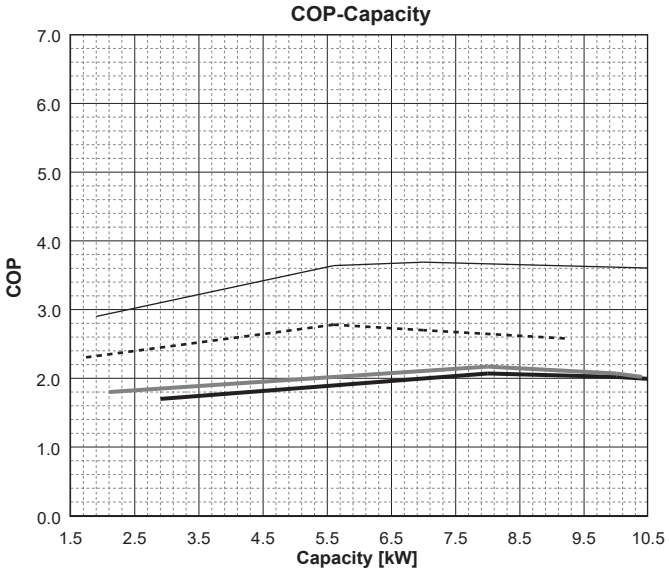

## PUZ-SHWM120VAA PUZ-SHWM120YAA

### ■ Water outlet temperature 35 [°C ]

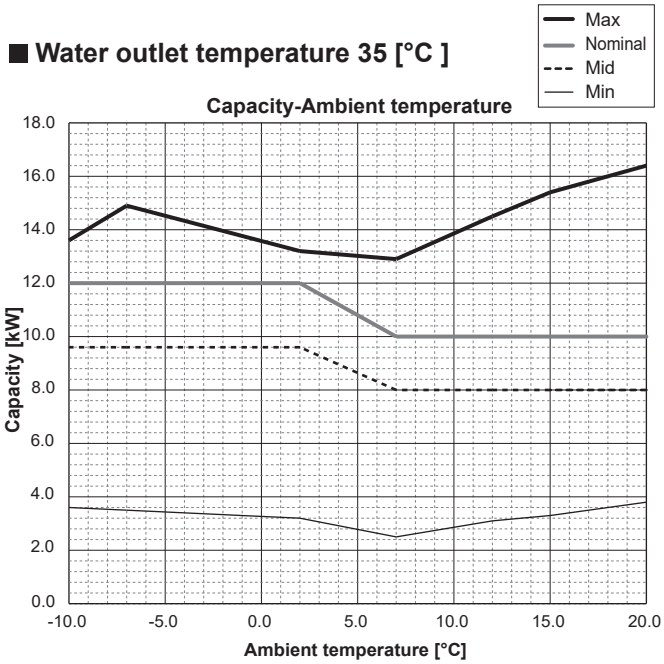


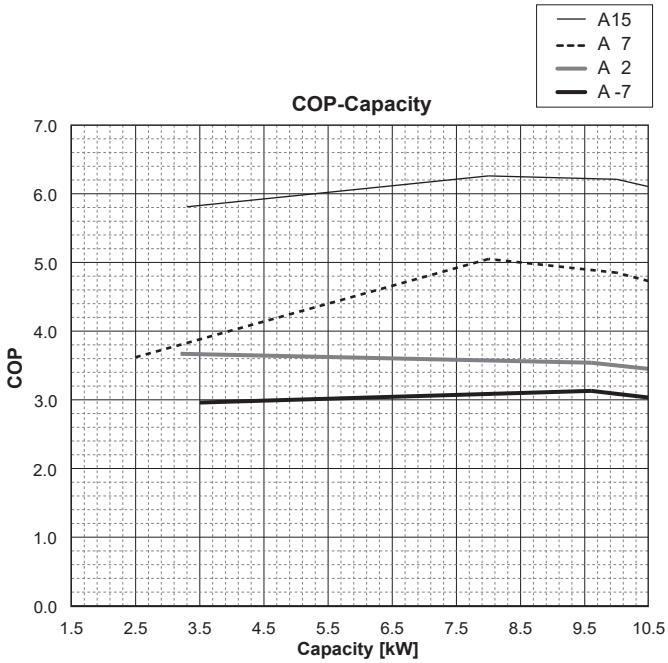


### ■ Water outlet temperature 45 [°C ]

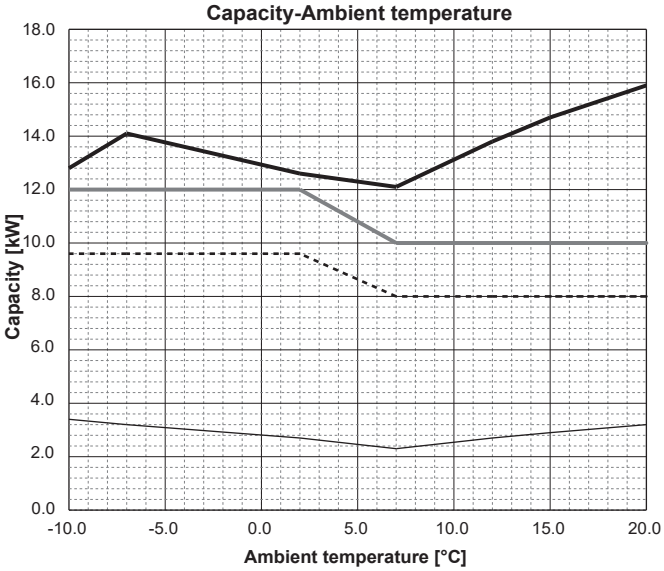


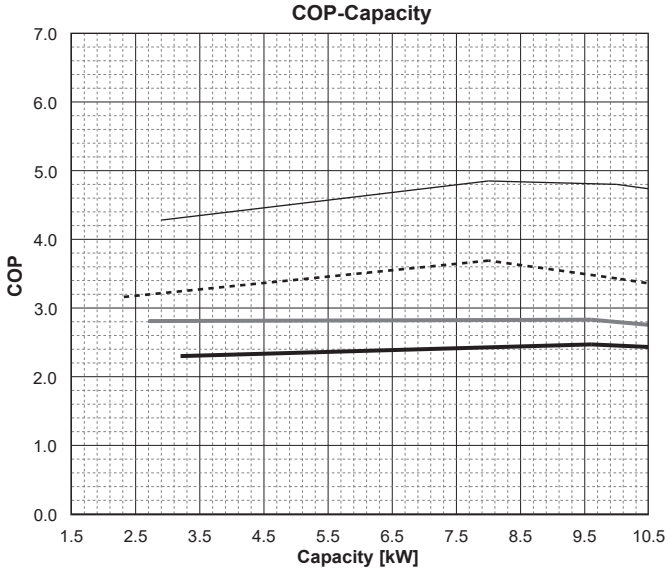


### ■ Water outlet temperature 55 [°C ]

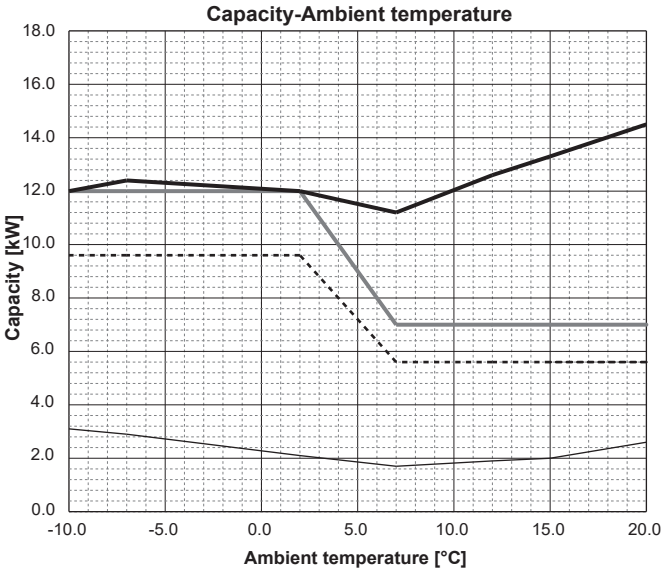


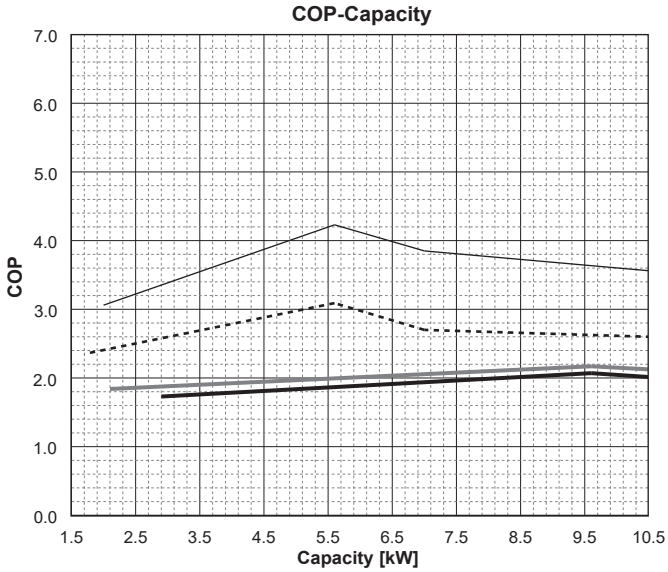

**PUZ-SHWM140VAA** **PUZ-SHWM140YAA**

## ■ Water outlet temperature 35 [°C ]

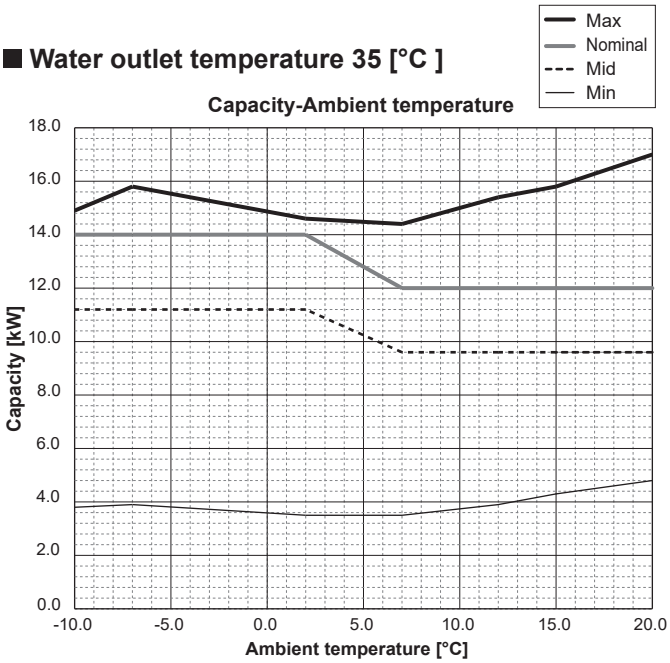


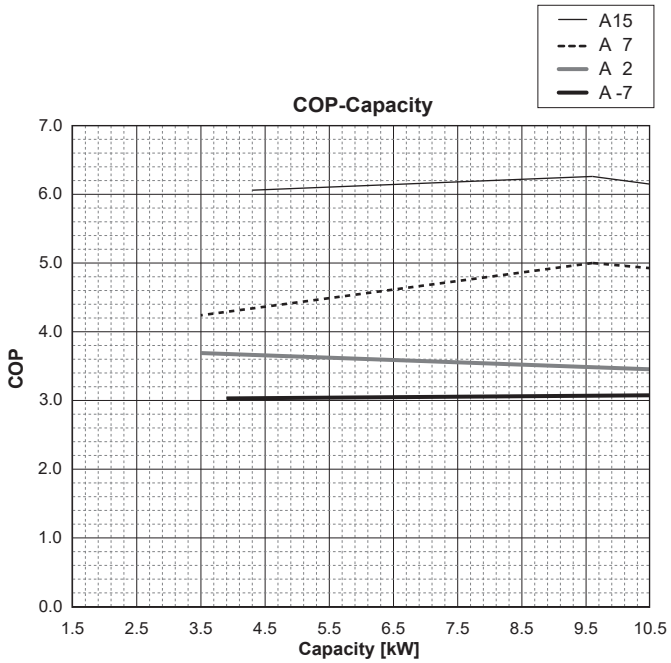


## ■ Water outlet temperature 45 [°C ]

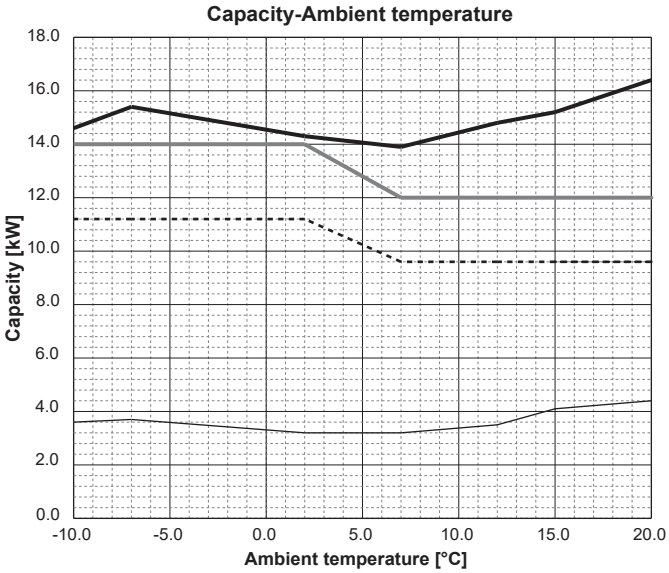


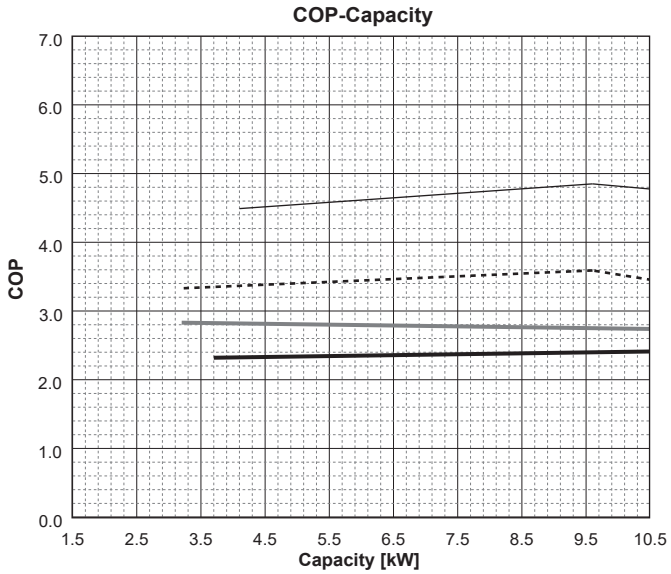


## ■ Water outlet temperature 55 [°C ]

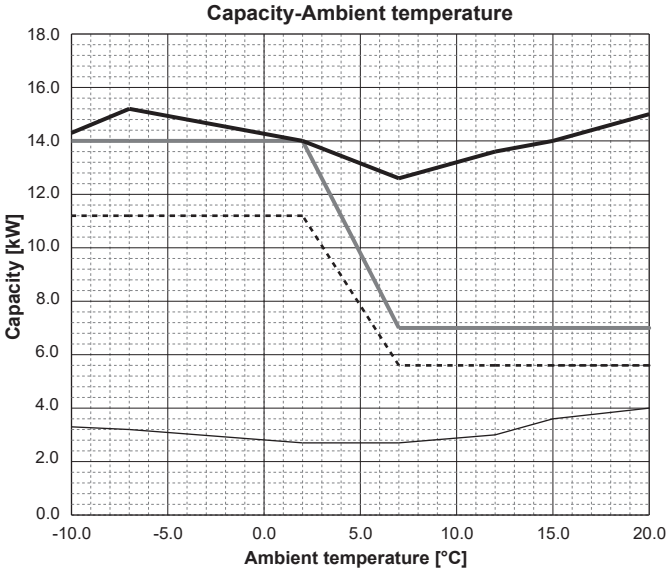


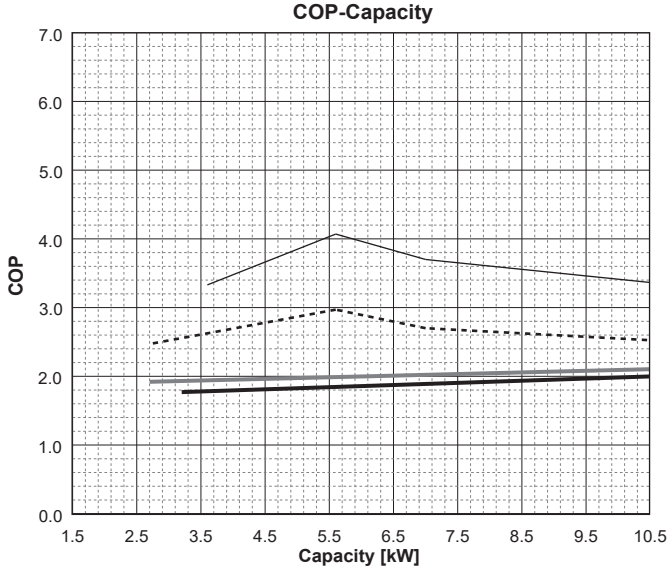

## PUD-SWM60VAA(-BS)

### ■ Water outlet temperature 35 [°C ]

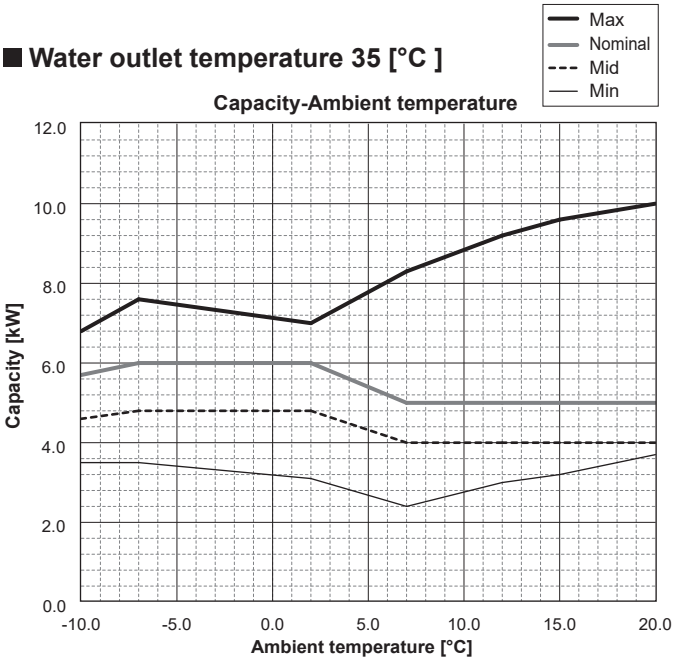


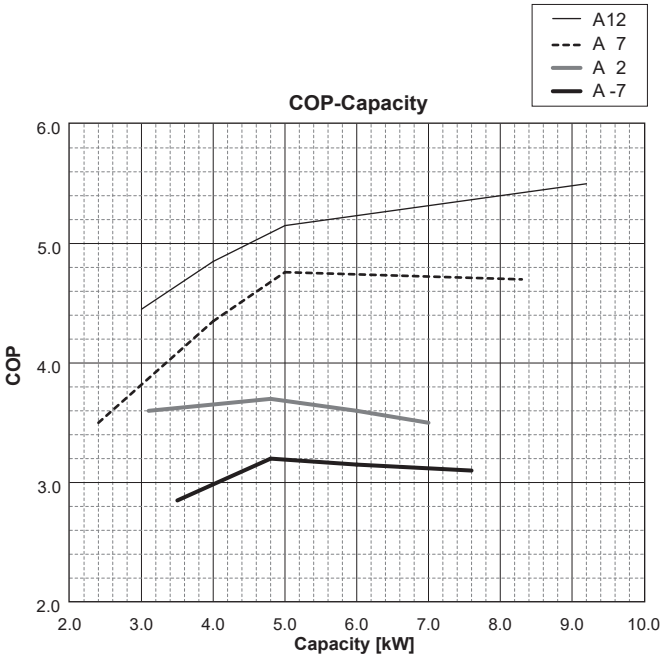


### ■ Water outlet temperature 45 [°C ]

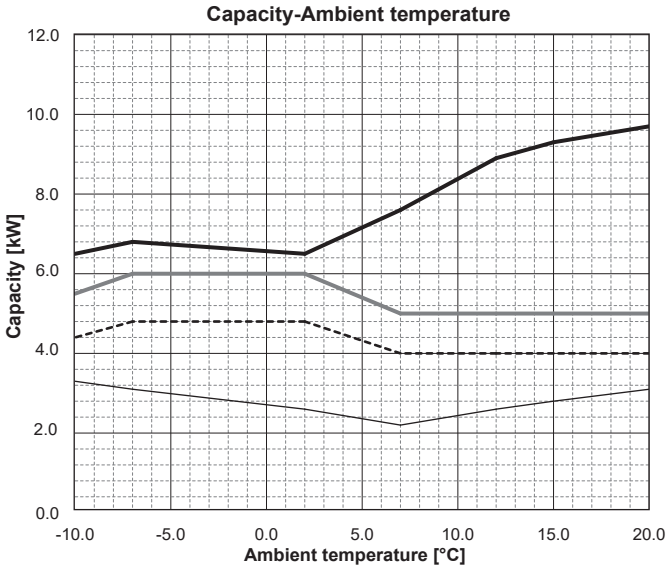


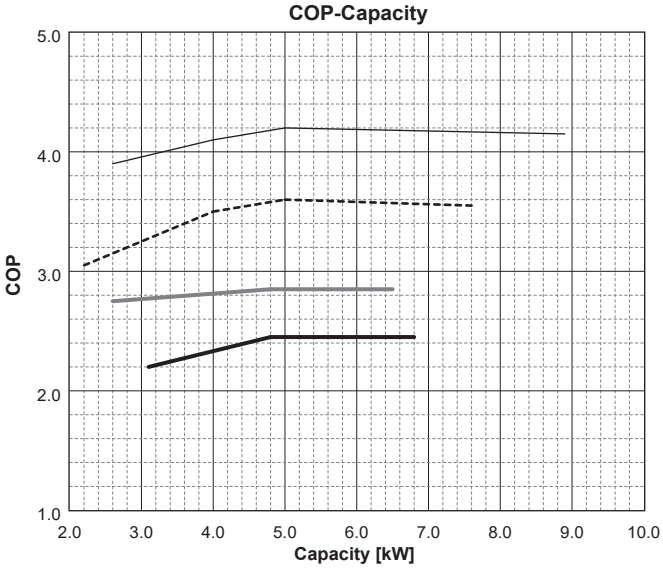


### ■ Water outlet temperature 55 [°C ]

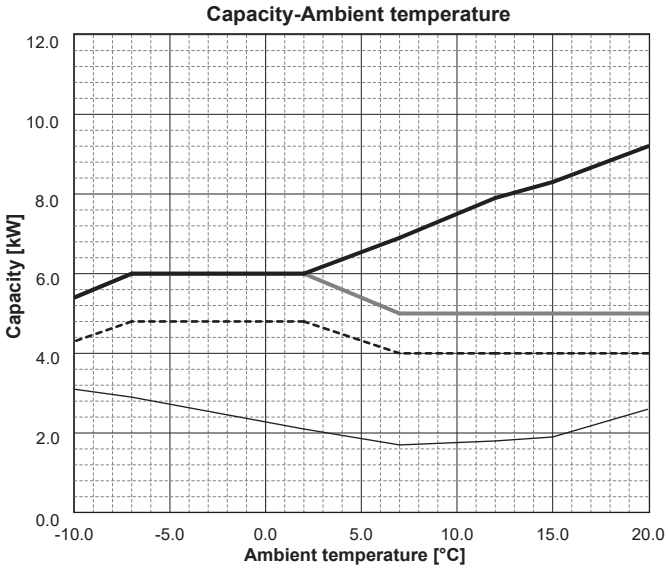


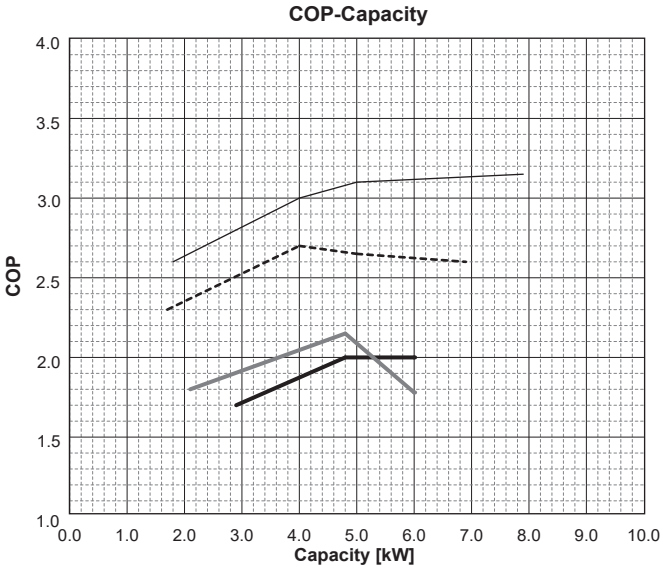

## PUD-SWM80VAA(-BS) PUD-SWM80YAA(-BS)

### ■ Water outlet temperature 35 [°C ]

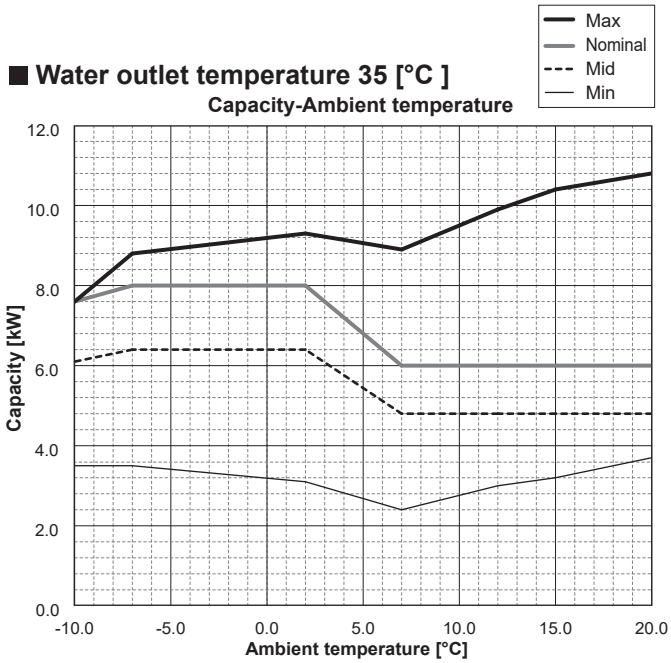


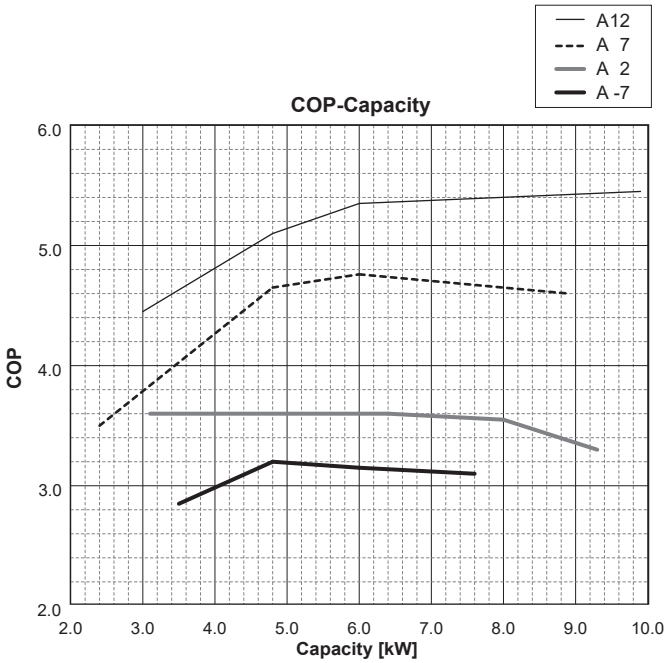


### ■ Water outlet temperature 45 [°C ]

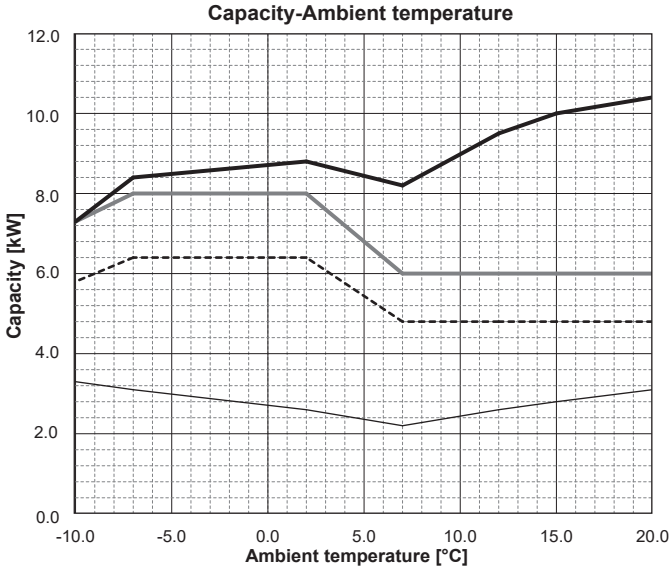


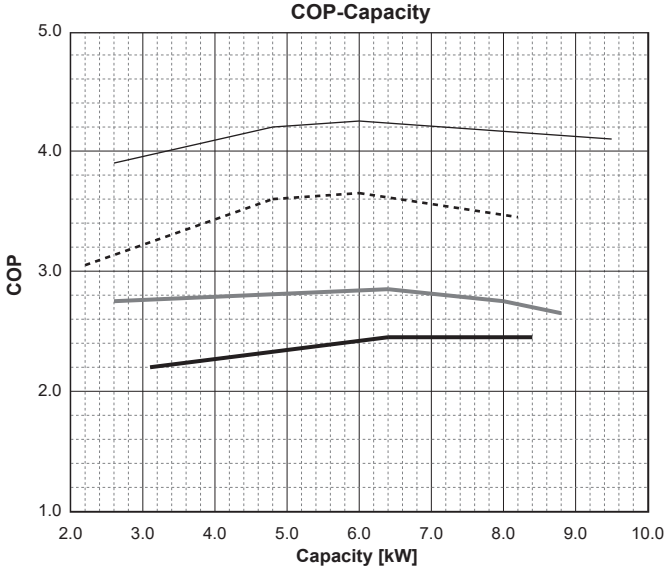


### ■ Water outlet temperature 55 [°C ]

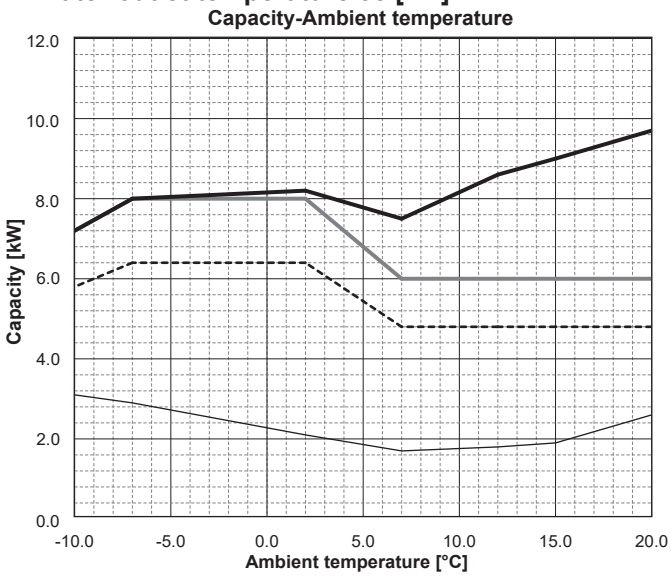


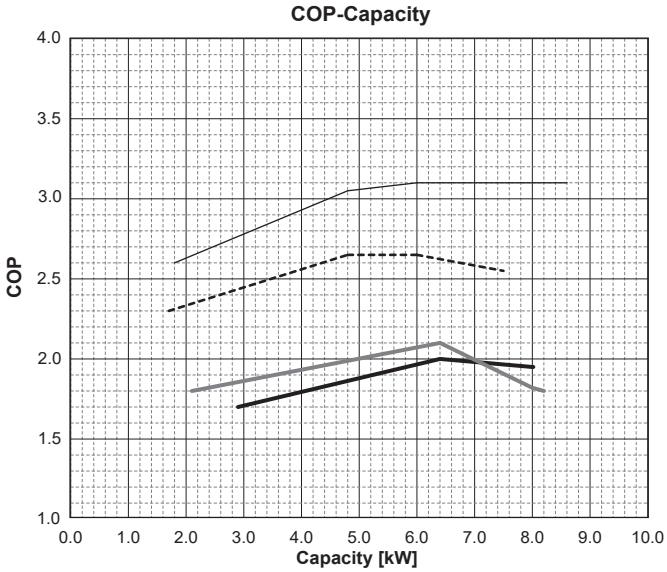

## PUD-SWM100VAA(-BS) PUD-SWM100YAA(-BS)

### ■ Water outlet temperature 35 [°C ]

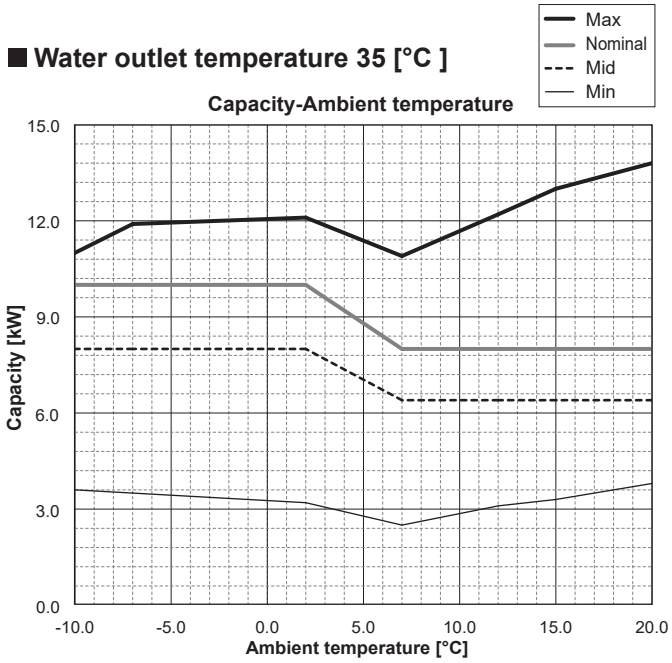


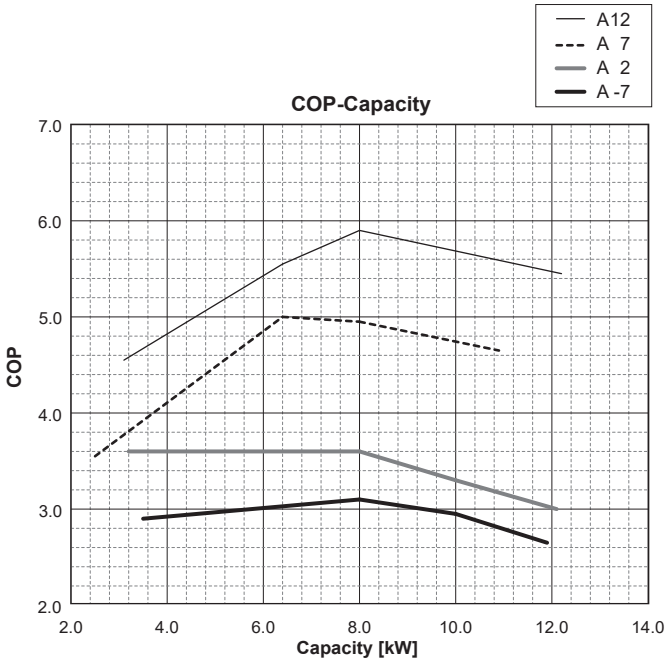


### ■ Water outlet temperature 45 [°C ]

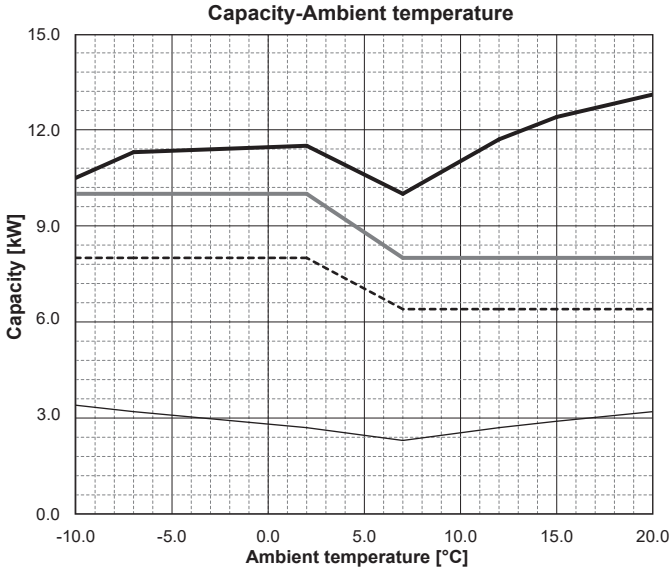


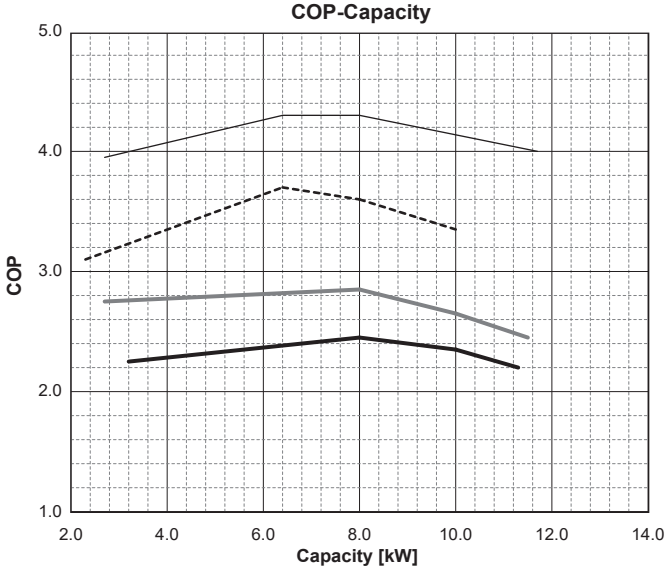


### ■ Water outlet temperature 55 [°C ]

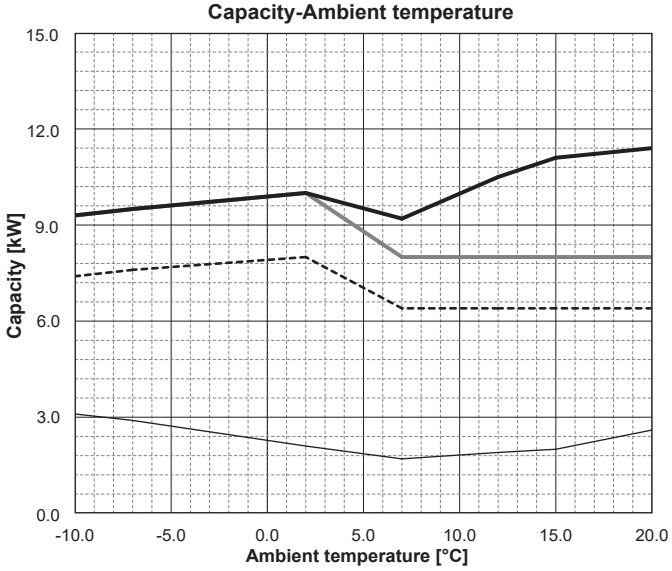


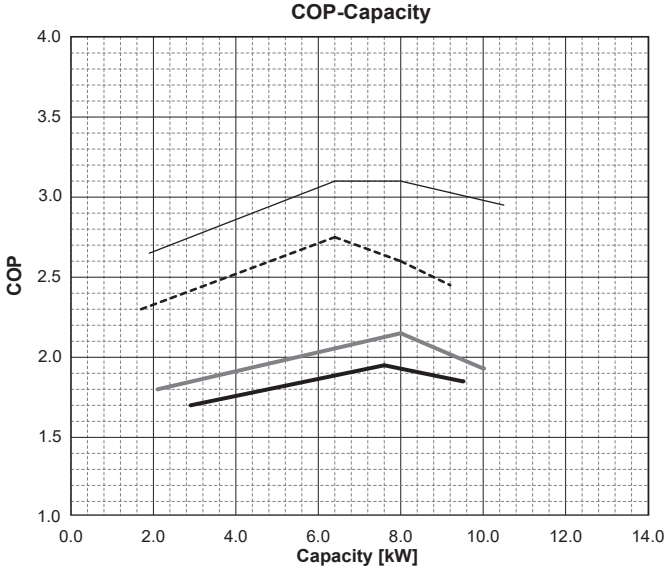

## PUD-SWM120VAA(-BS) PUD-SWM120YAA(-BS)

### ■ Water outlet temperature 35 [°C ]

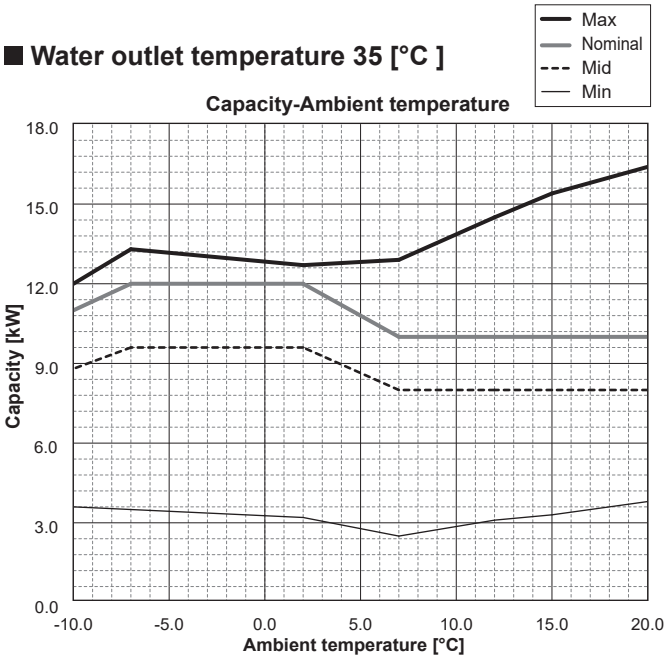


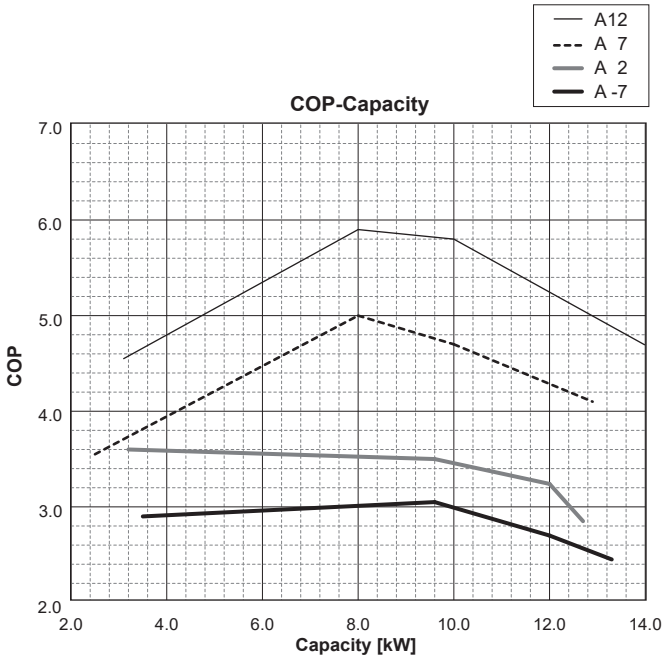


### ■ Water outlet temperature 45 [°C ]

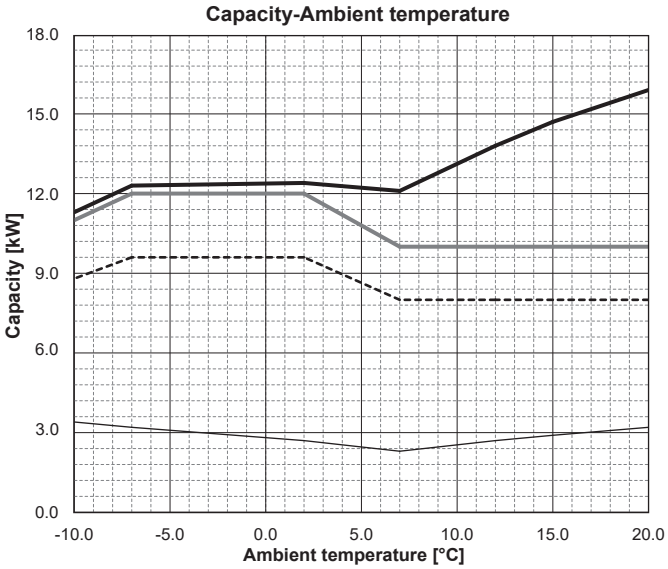


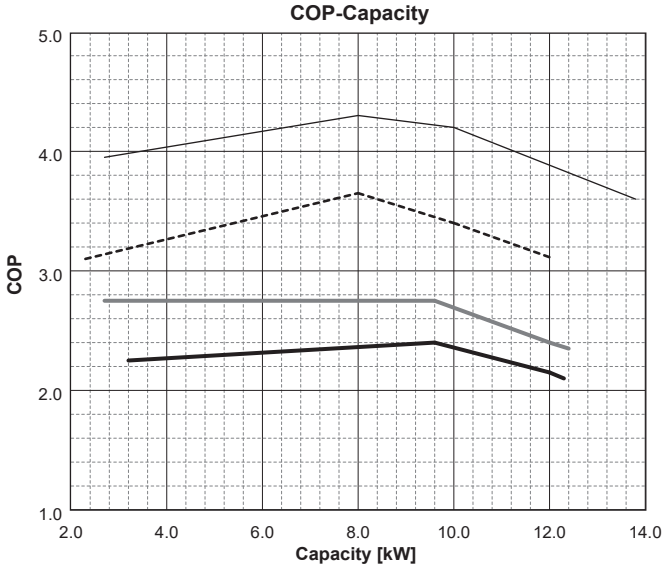


### ■ Water outlet temperature 55 [°C ]

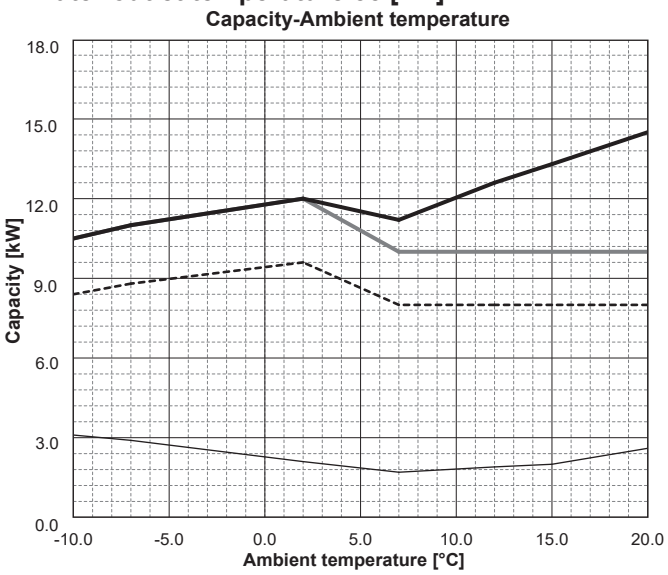


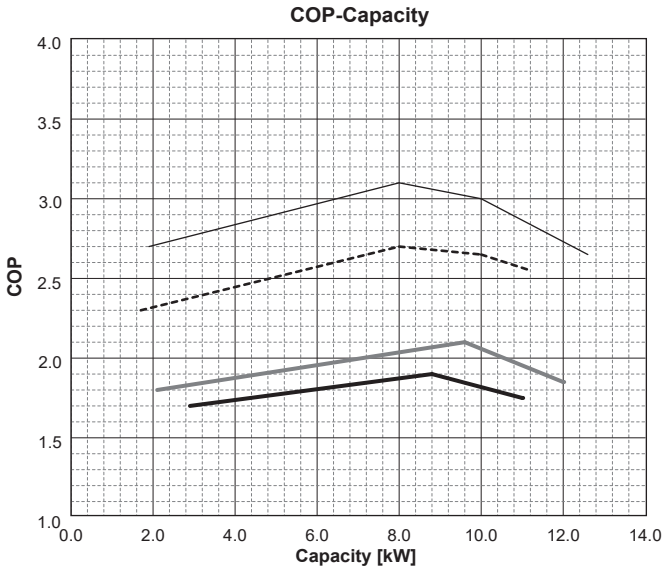

## PUD-SHWM60VAA(-BS)

### ■ Water outlet temperature 35 [°C ]

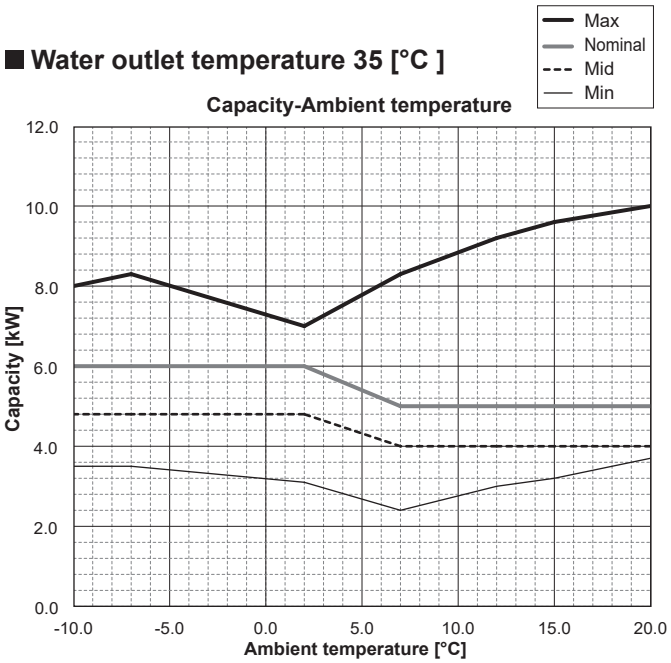


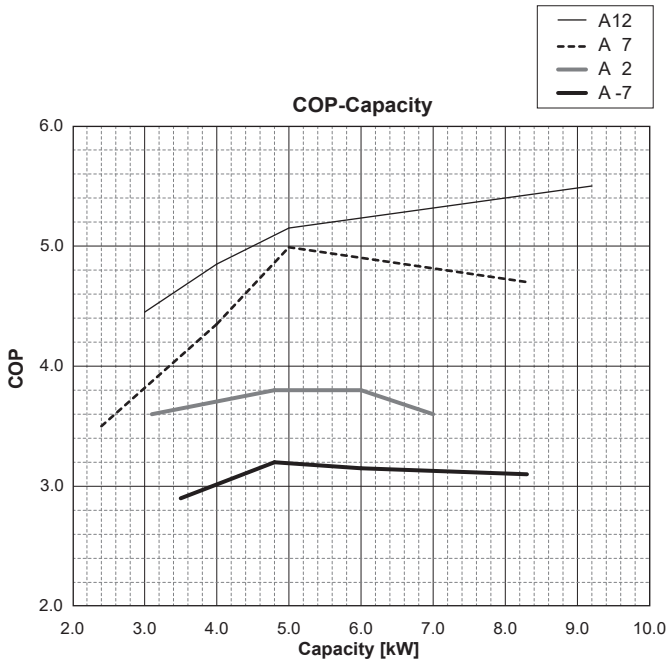


### ■ Water outlet temperature 45 [°C ]

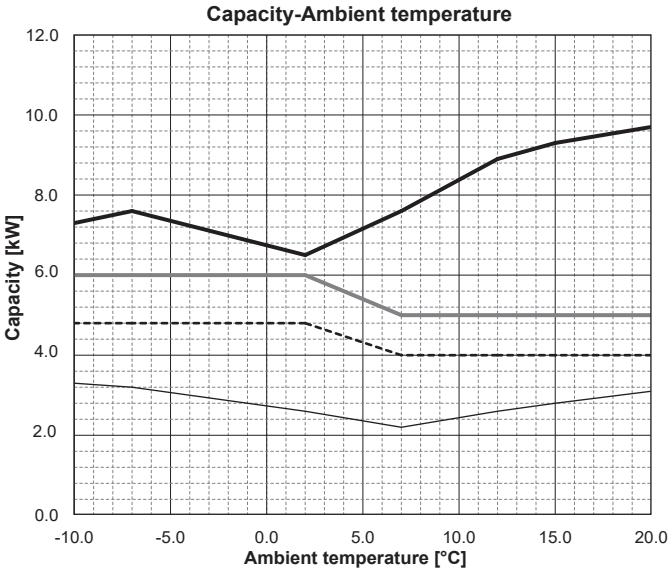


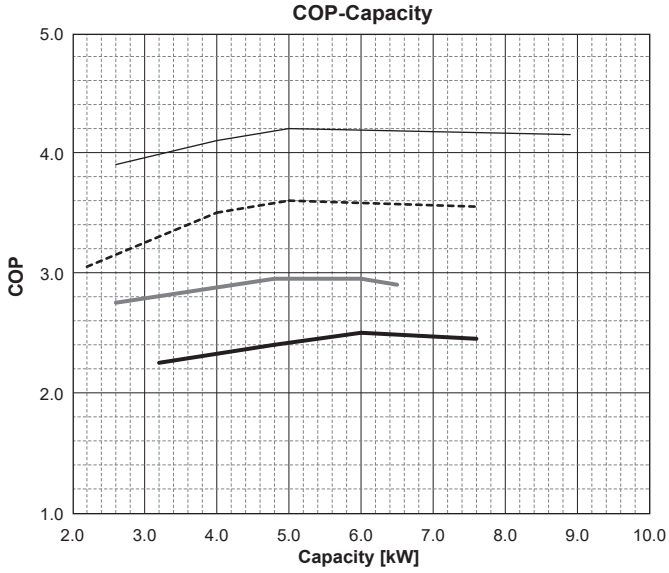


### ■ Water outlet temperature 55 [°C ]

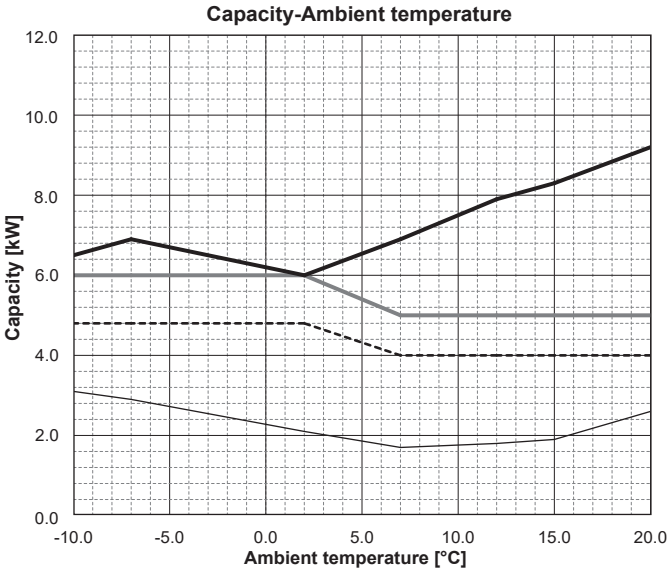


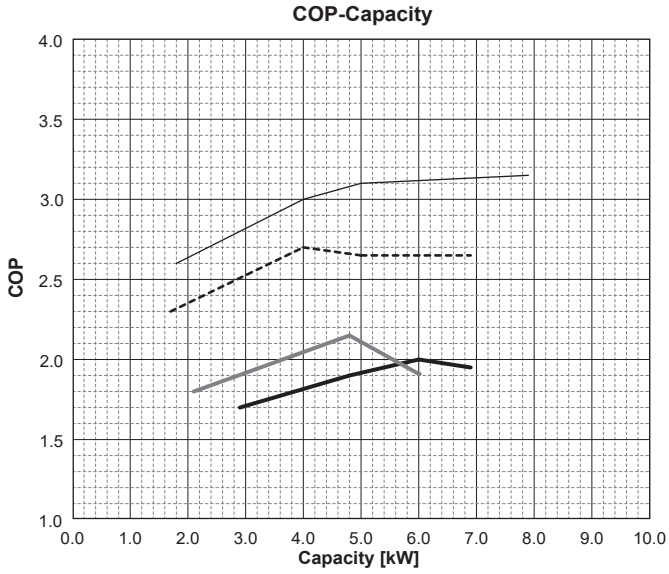

## PUD-SHWM80VAA(-BS) PUD-SHWM80YAA(-BS)

### ■ Water outlet temperature 35 [°C ]

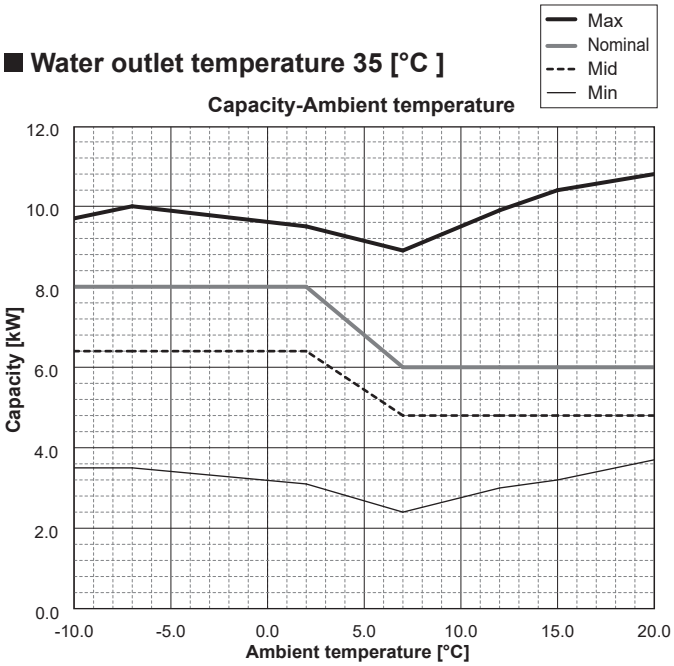


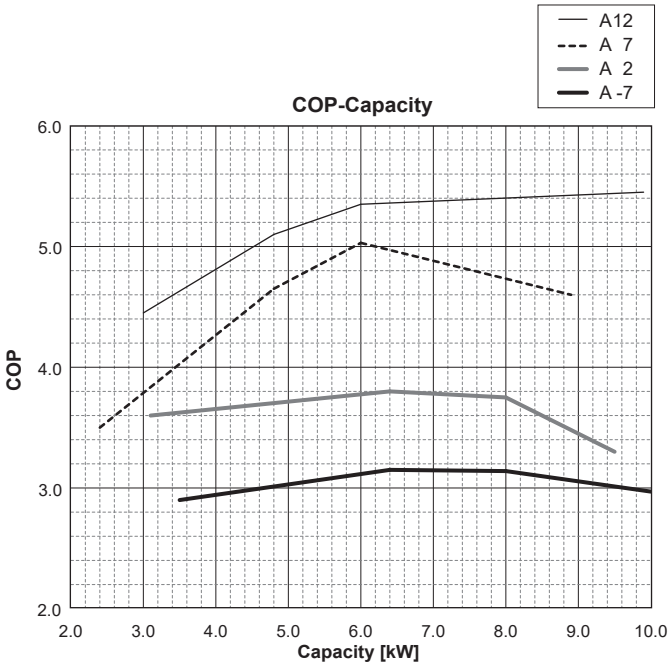


### ■ Water outlet temperature 45 [°C ]

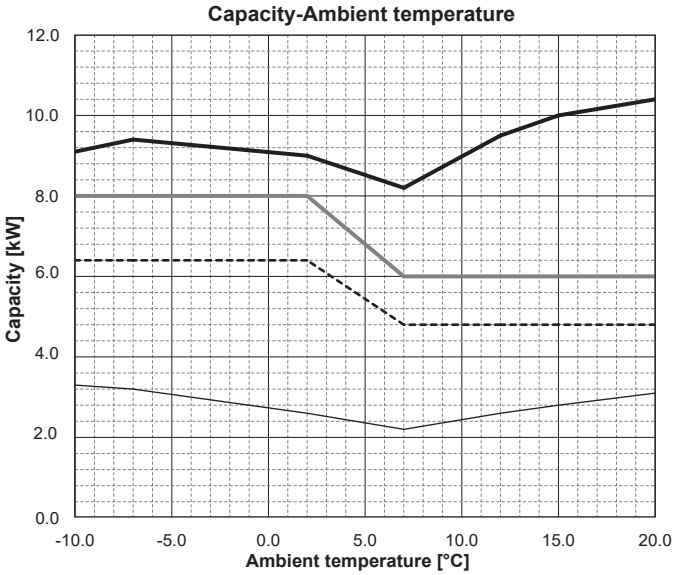


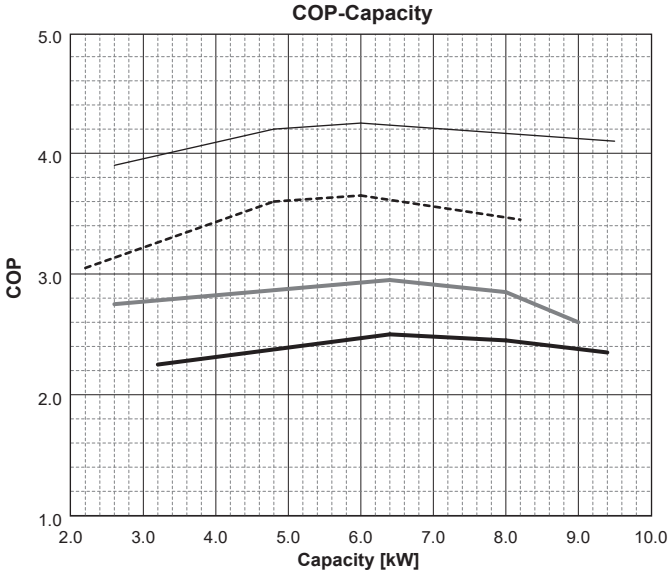


### ■ Water outlet temperature 55 [°C ]

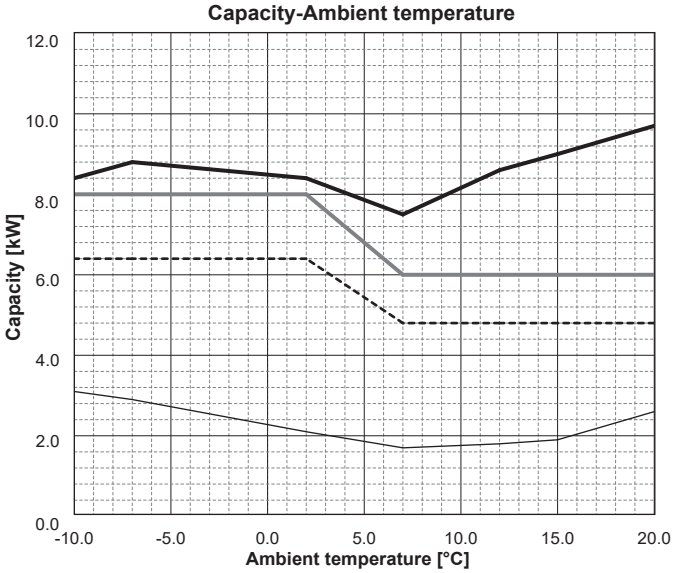


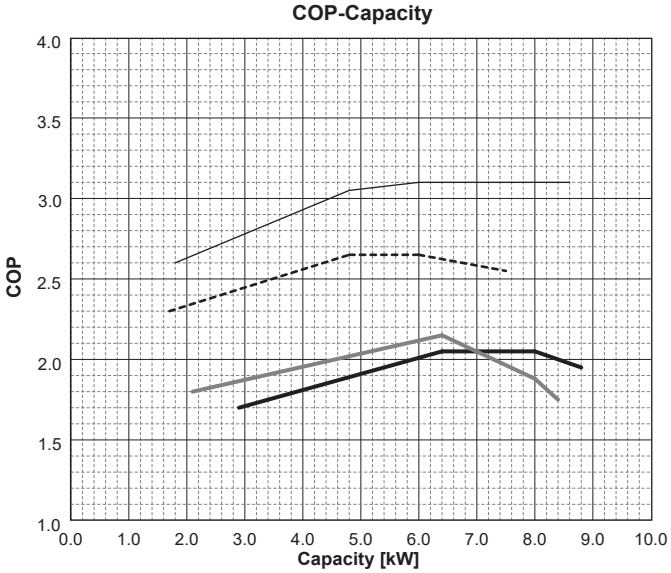

## PUD-SHWM100VAA(-BS) PUD-SHWM100YAA(-BS)

### ■ Water outlet temperature 35 [°C ]

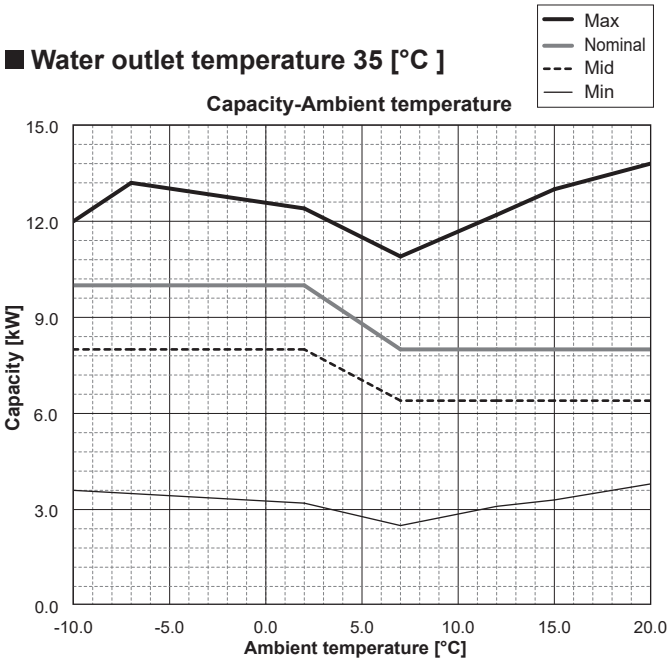


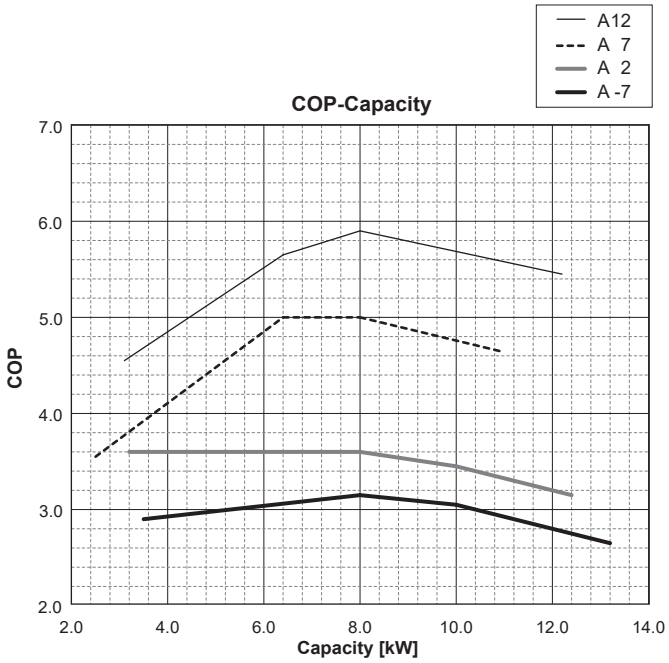


### ■ Water outlet temperature 45 [°C ]

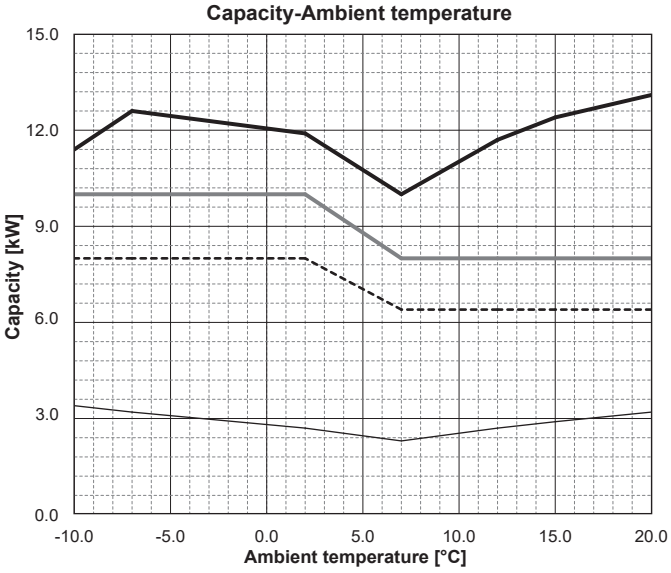


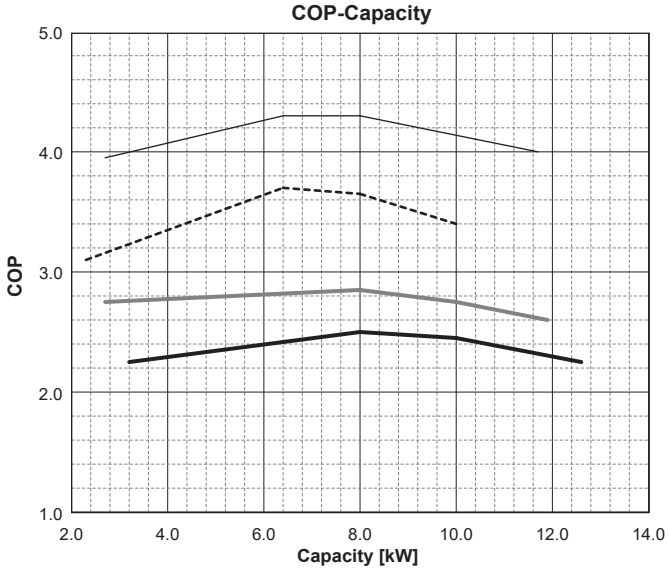


### ■ Water outlet temperature 55 [°C ]

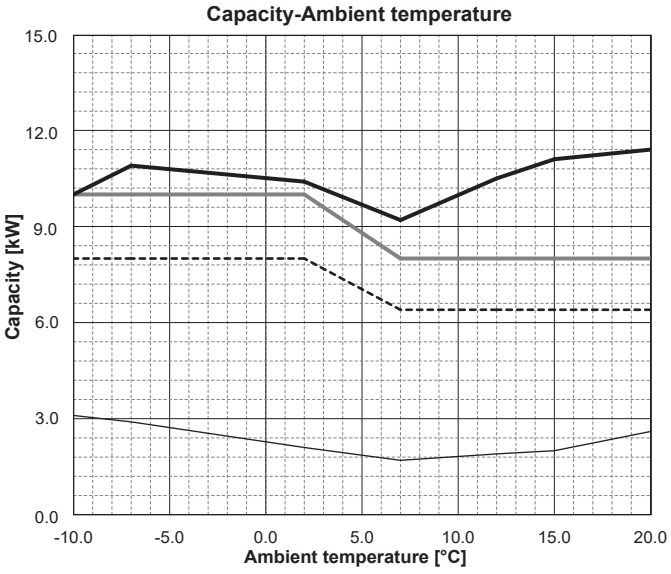


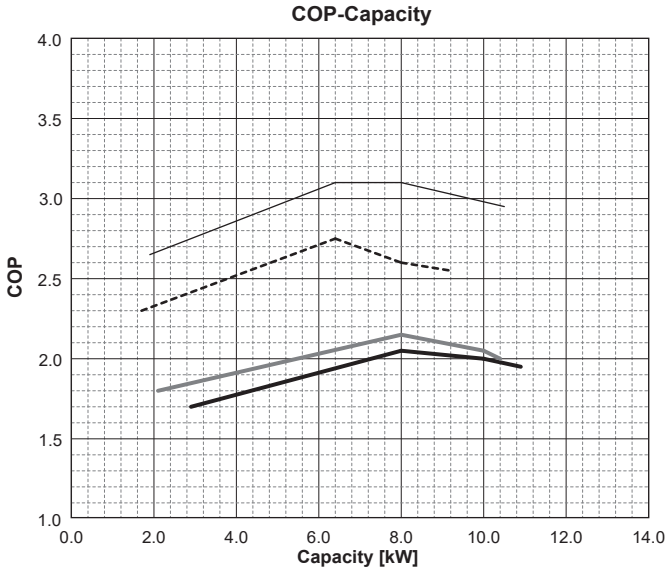

## PUD-SHWM120VAA(-BS) PUD-SHWM120YAA(-BS)

### ■ Water outlet temperature 35 [°C ]

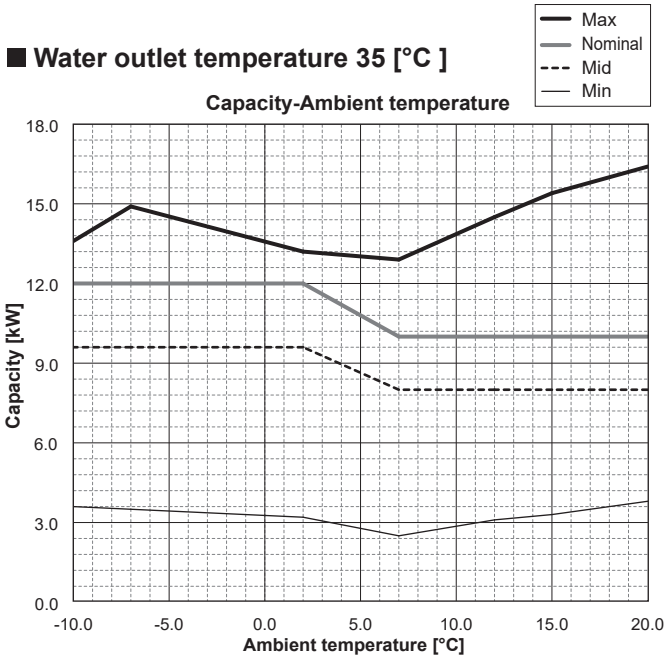


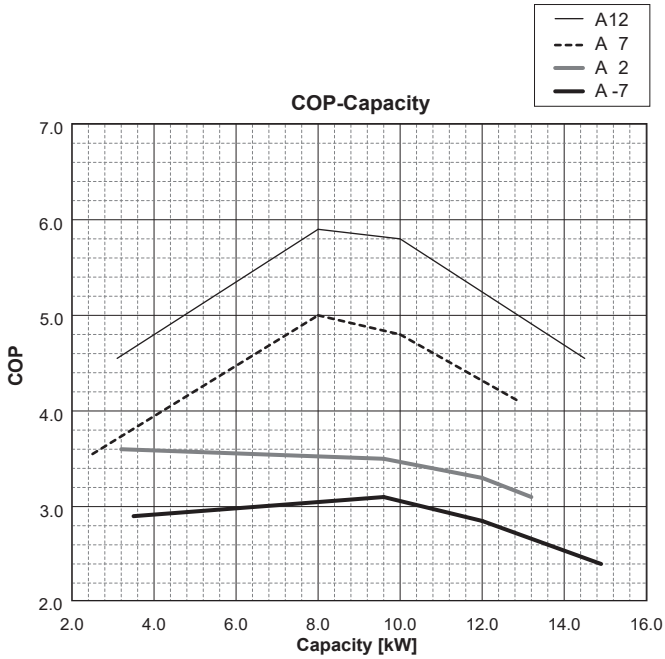


### ■ Water outlet temperature 45 [°C ]

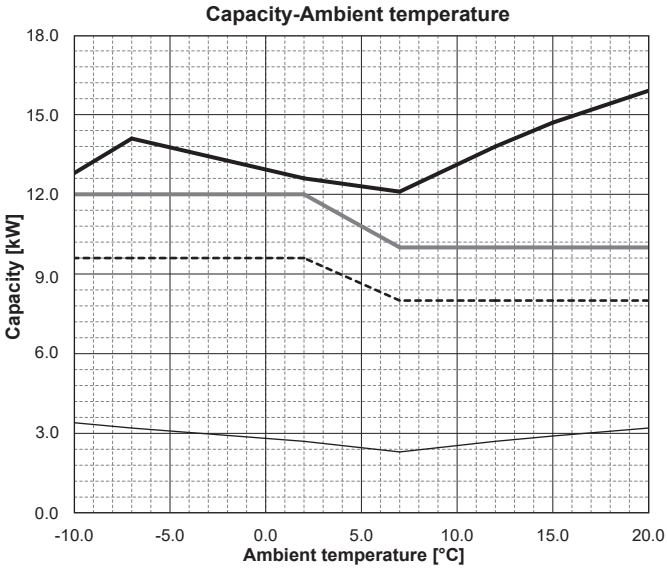


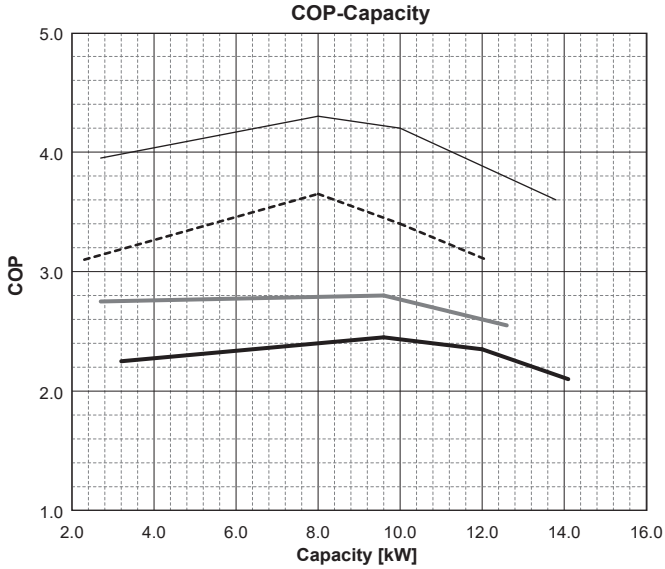


### ■ Water outlet temperature 55 [°C ]

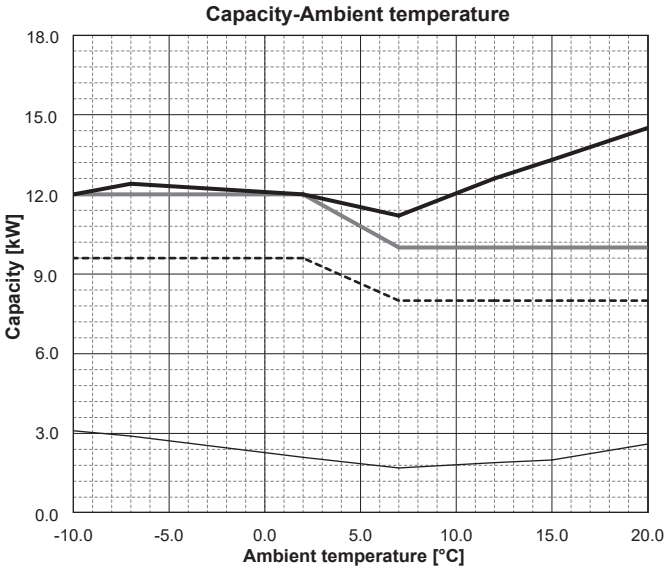


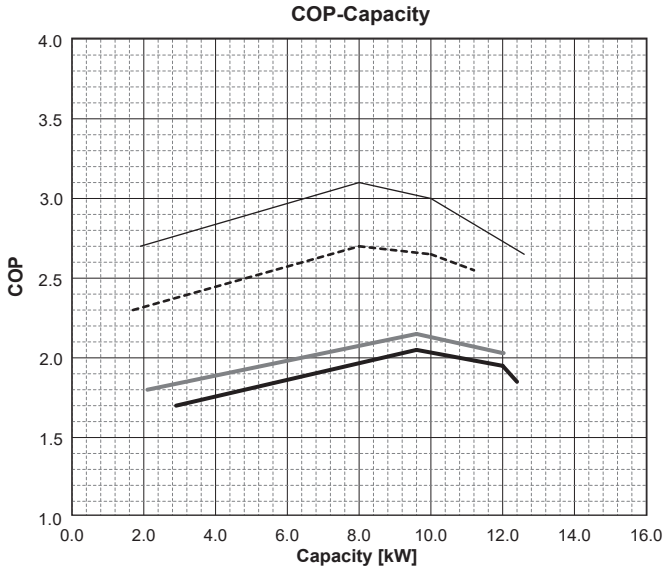

## PUD-SHWM140VAA(-BS) PUD-SHWM140YAA(-BS)

### ■ Water outlet temperature 35 [°C ]

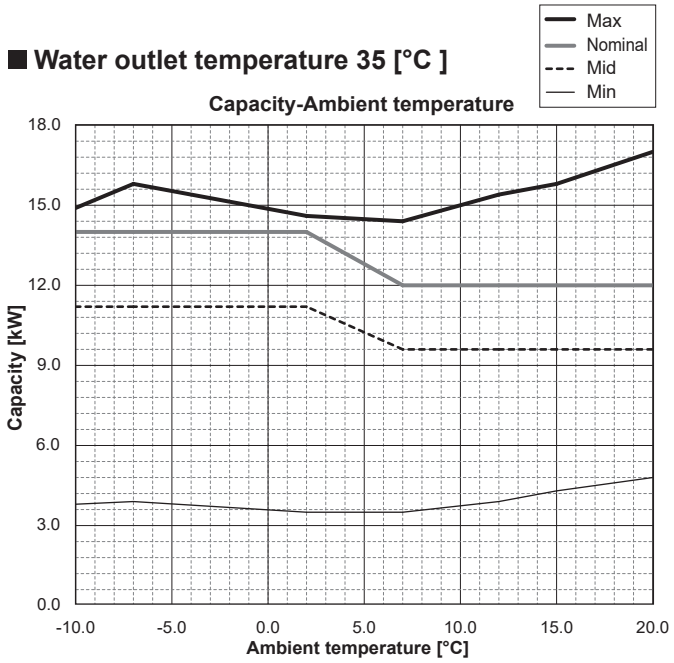


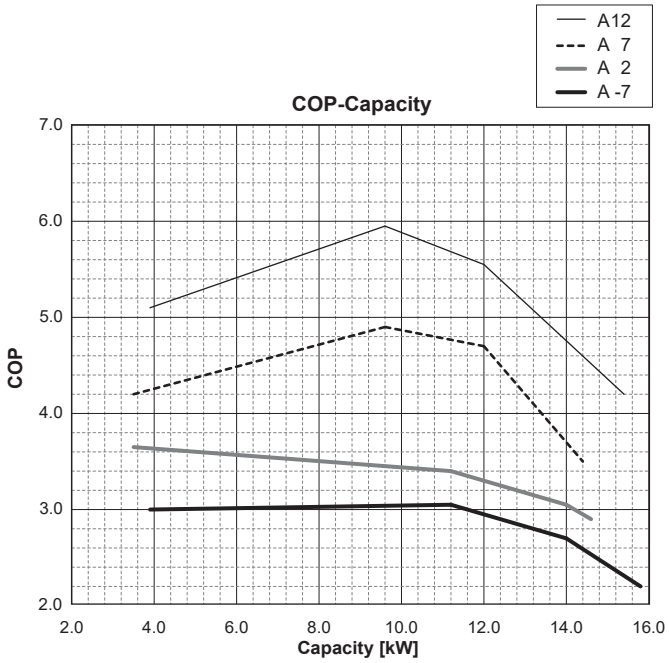


### ■ Water outlet temperature 45 [°C ]

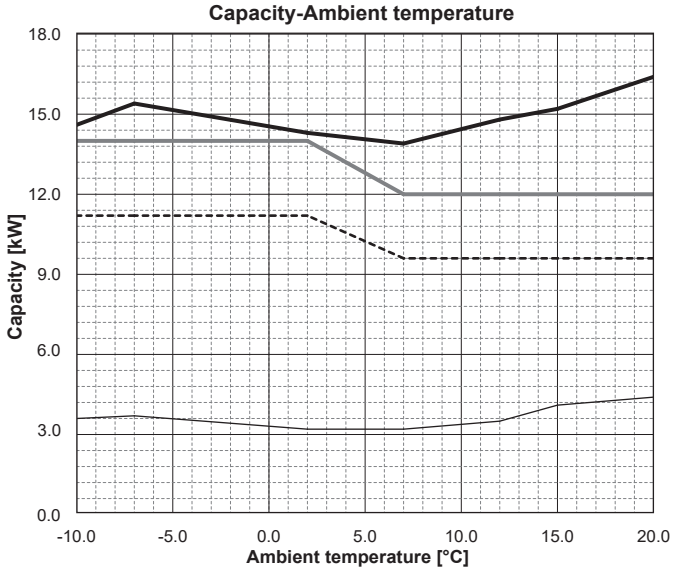


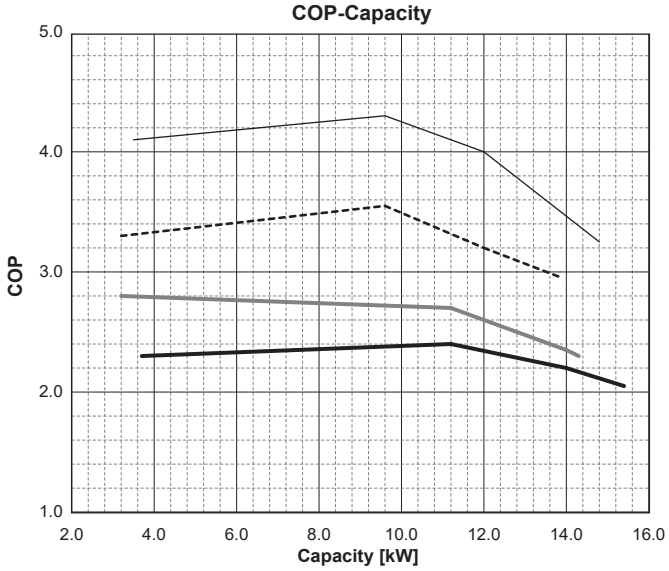


### ■ Water outlet temperature 55 [°C ]

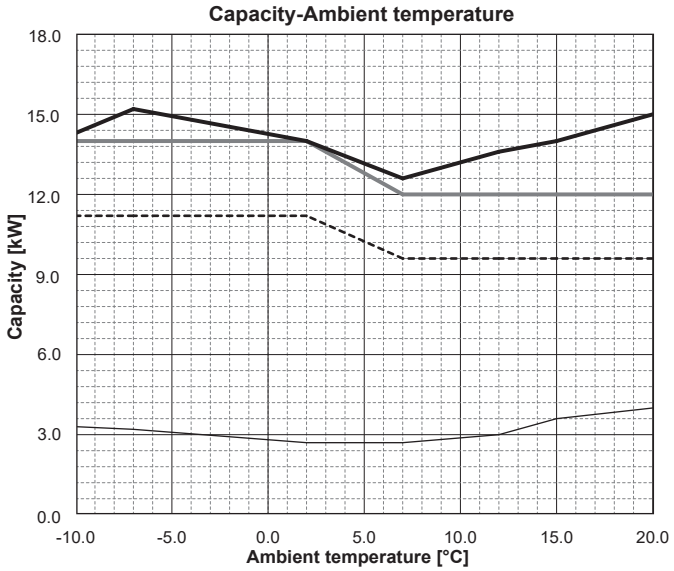


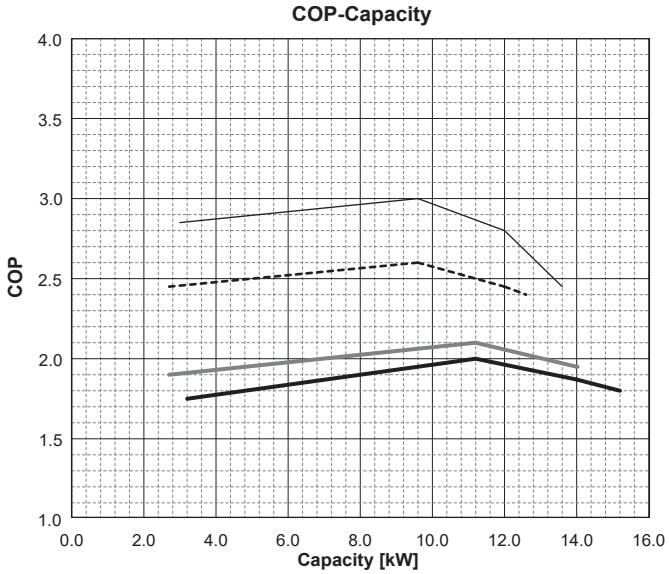

## PXZ-4F75VG

### ■ Water outlet temperature 35 [°C ]

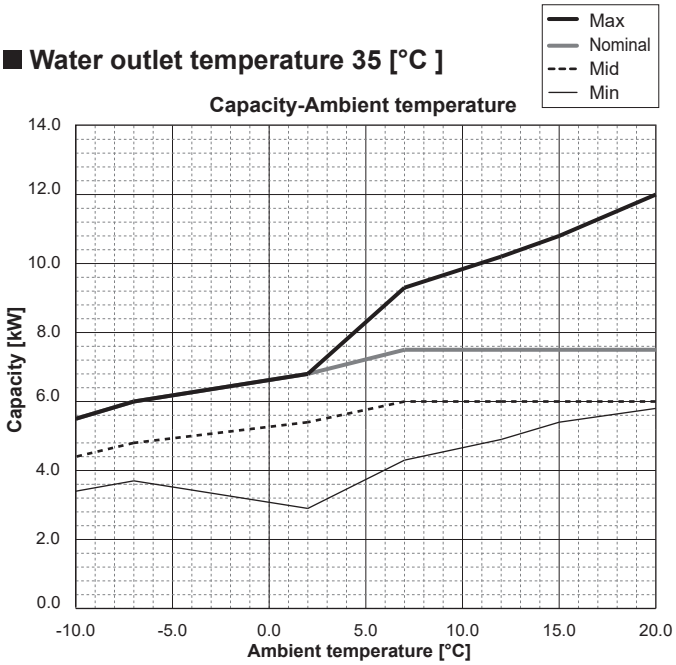


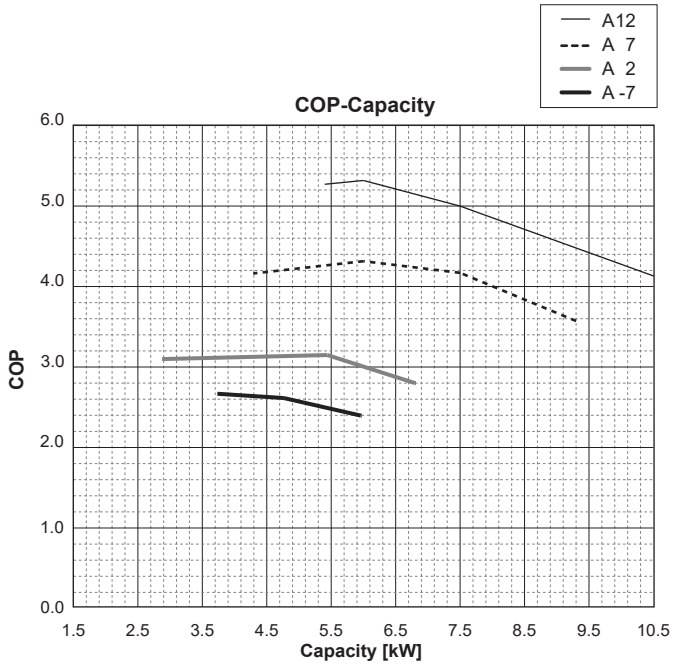


### ■ Water outlet temperature 45 [°C ]

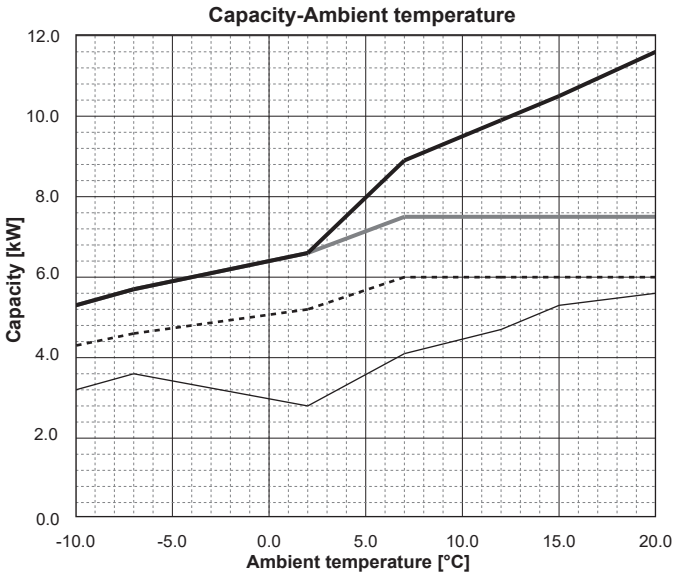


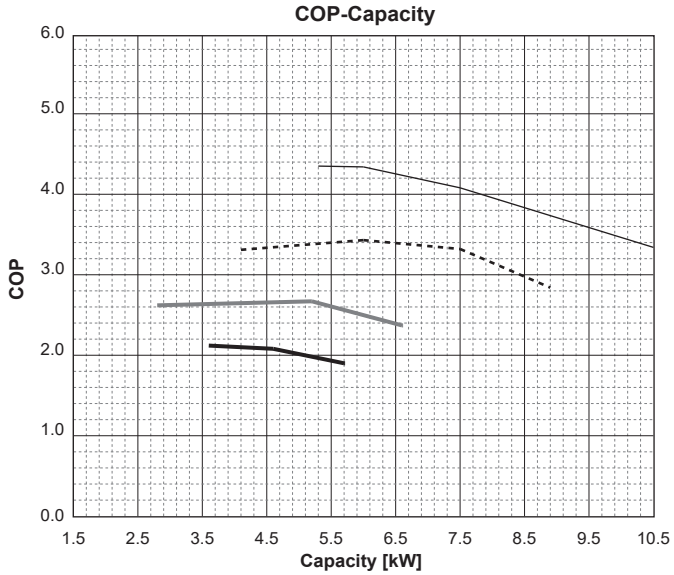


### ■ Water outlet temperature 55 [°C ]

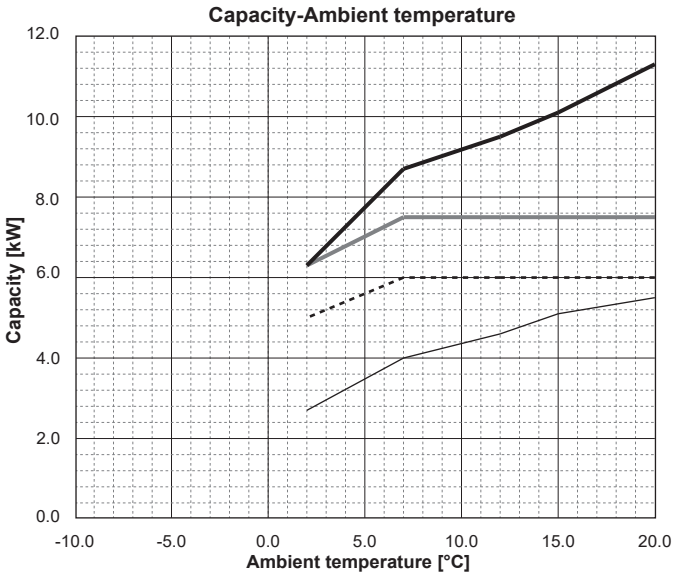


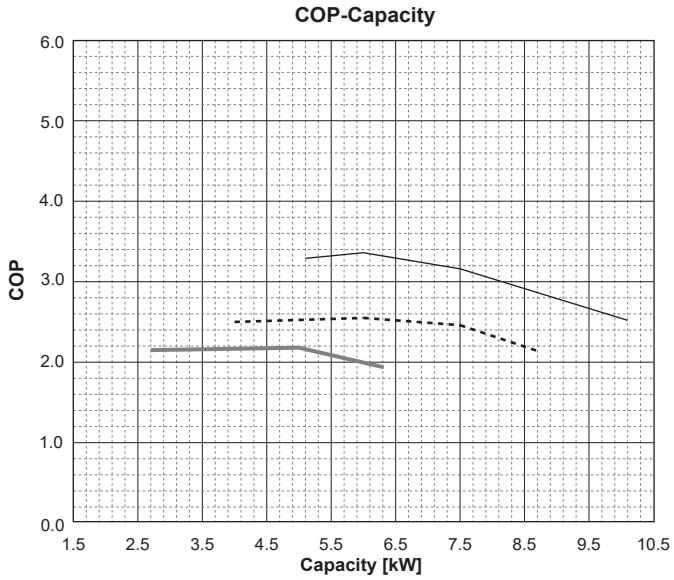

## PXZ-5F85VG

### ■ Water outlet temperature 35 [°C ]

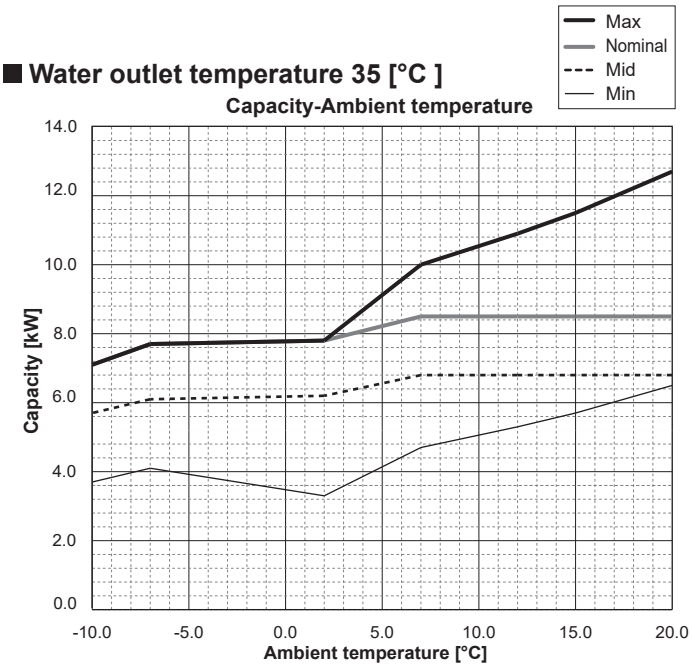


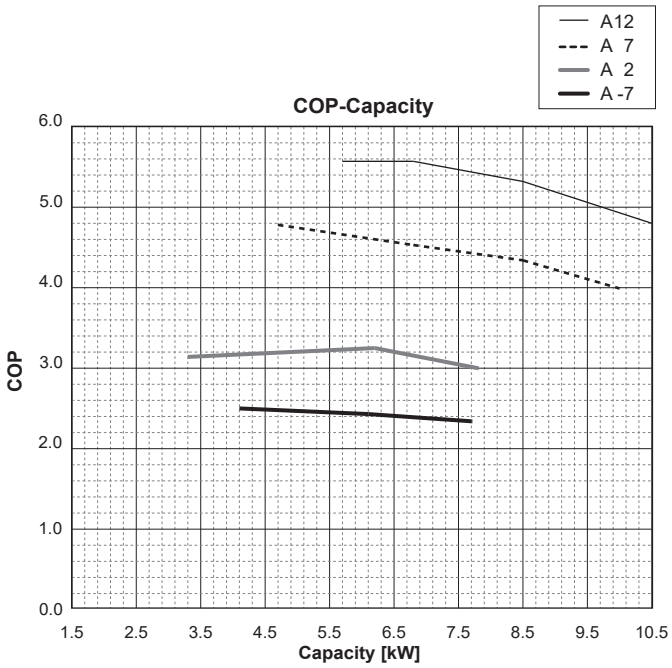


### ■ Water outlet temperature 45 [°C ]

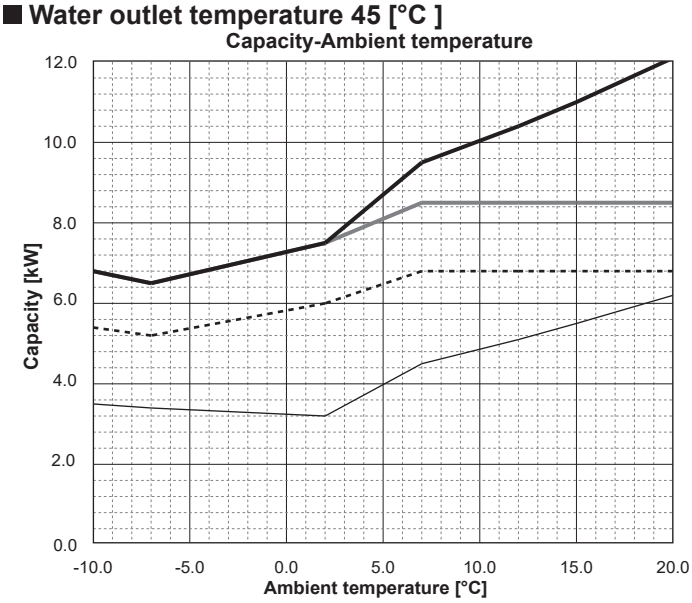


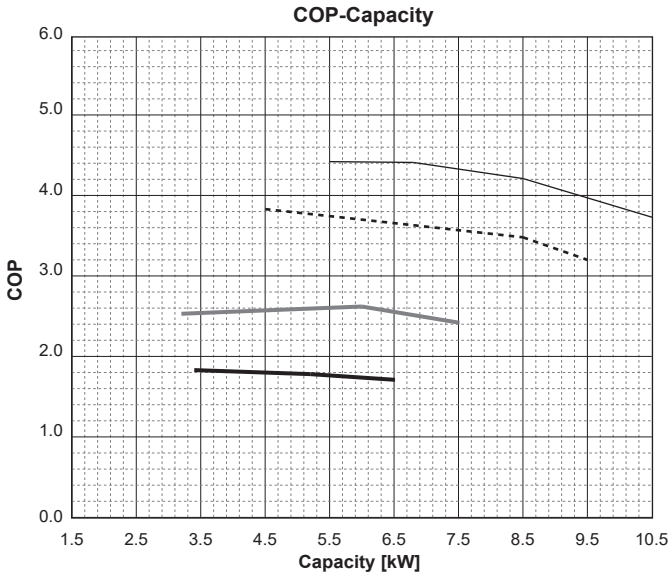


### ■ Water outlet temperature 55 [°C ]

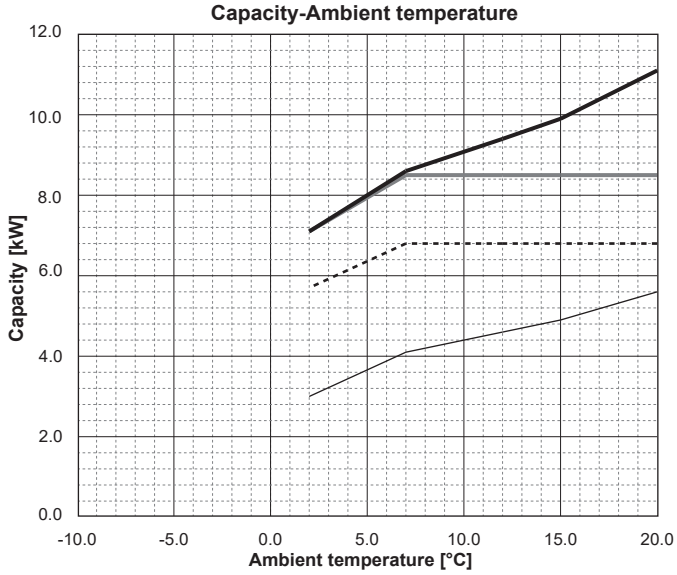


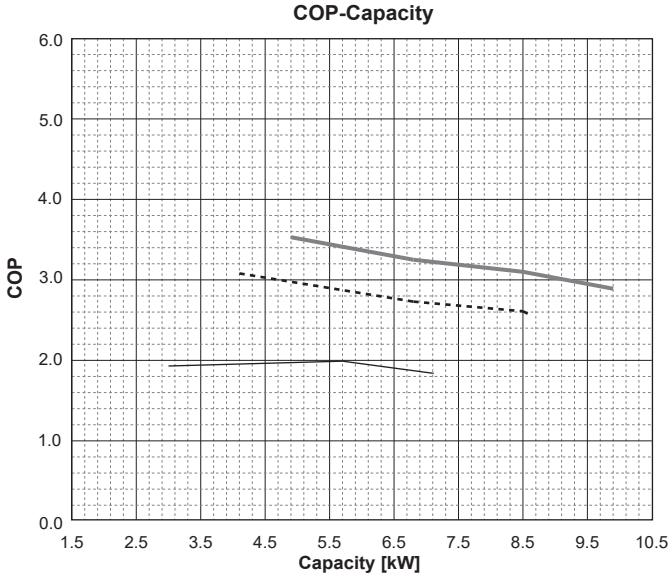

## 5.4 Best COP

<Notes>
1) These data are measured based on EN14511-2013.
2) Max COP of each model at each condition are shown.
3) Gray highlighted data means integrated data including defrost operation.

| Water outlet temperature[℃] | | 35 | | 45 | | 55 | |
|---|---|---|---|---|---|---|---|
| Ambient temperature[℃] | | Capacity | COP | Capacity | COP | Capacity | COP |
| PUZ-WM50VHA(-BS) | -7 | 2.7 | 3.25 | 3.7 | 2.42 | 3.5 | 1.90 |
| | 2 | 4.0 | 3.69 | 4.0 | 2.77 | 4.0 | 2.20 |
| | | 2.5 | 3.42 | 2.5 | 3.47 | 2.3 | 2.78 |
| | 7 | 1.8 | 5.46 | 4.0 | 4.11 | 4.0 | 2.99 |
| PUZ-WM60VAA(-BS) | -7 | 4.8 | 3.25 | 4.8 | 2.45 | 4.8 | 2.05 |
| | 2 | 4.8 | 4.00 | 4.8 | 3.20 | 4.8 | 2.50 |
| | | 3.4 | 4.40 | 3.2 | 3.40 | 5.3 | 2.63 |
| | 7 | 2.9 | 5.45 | 4.8 | 4.00 | 4.8 | 3.00 |
| PUZ-WM85VAA(-BS)<br>PUZ-WM85YAA(-BS) | -7 | 6.8 | 2.60 | 6.8 | 2.30 | 6.4 | 1.90 |
| | 2 | 6.8 | 3.75 | 6.8 | 3.00 | 6.8 | 2.35 |
| | | 3.4 | 4.15 | 7.5 | 3.15 | 7.5 | 2.47 |
| | 7 | 3.2 | 5.20 | 6.8 | 3.80 | 6.8 | 2.85 |
| PUZ-WM112VAA(-BS)<br>PUZ-WM112YAA(-BS) | -7 | 9.0 | 3.05 | 9.0 | 2.55 | 8.0 | 1.90 |
| | 2 | 9.0 | 3.75 | 9.0 | 2.80 | 8.0 | 2.10 |
| | | 9.9 | 3.94 | 9.9 | 2.94 | 8.8 | 2.21 |
| | 7 | 9.0 | 4.80 | 9.0 | 3.90 | 8.0 | 3.00 |
| PUZ-HWM140VHA(-BS)<br>PUZ-HWM140YHA(-BS) | -7 | 11.2 | 3.00 | 11.2 | 2.50 | 11.2 | 2.10 |
| | 2 | 5.1 | 3.65 | 11.2 | 2.90 | 11.2 | 2.55 |
| | | 6.0 | 3.69 | 12.3 | 3.05 | 12.3 | 2.68 |
| | 7 | 11.2 | 4.80 | 11.2 | 3.85 | 11.2 | 2.90 |
| SUZ-SWM40VA | -7 | 2.3 | 3.17 | 2.1 | 2.42 | 1.7 | 1.61 |
| | 2 | 3.2 | 4.17 | 3.2 | 3.14 | 3.2 | 2.19 |
| | | 3.0 | 4.27 | 2.9 | 3.20 | 2.7 | 2.23 |
| | 7 | 4.0 | 5.20 | 4.0 | 3.70 | 4.0 | 2.61 |
| SUZ-SWM60VA | -7 | 3.9 | 3.08 | 3.7 | 2.51 | 3.2 | 1.97 |
| | 2 | 5.8 | 3.38 | 5.0 | 2.68 | 5.0 | 2.12 |
| | | 5.4 | 4.17 | 4.5 | 3.31 | 4.2 | 2.39 |
| | 7 | 4.8 | 5.21 | 5.3 | 3.62 | 5.4 | 2.73 |
| SUZ-SWM80VA | -7 | 3.9 | 3.03 | 3.4 | 2.46 | 2.9 | 1.95 |
| | 2 | 6.5 | 3.40 | 6.5 | 2.73 | 6.5 | 2.11 |
| | | 6.0 | 4.13 | 5.8 | 3.28 | 5.5 | 2.37 |
| | 7 | 6.0 | 5.10 | 6.0 | 3.72 | 6.0 | 2.85 |
| SUZ-SWM30VA | -7 | 2.4 | 3.18 | 2.4 | 2.57 | 2.9 | 2.16 |
| | 2 | 2.4 | 3.97 | 2.4 | 3.07 | 2.4 | 2.50 |
| | | 2.0 | 4.02 | 1.9 | 3.12 | 1.9 | 2.57 |
| | 7 | 3.0 | 5.11 | 2.4 | 3.71 | 2.9 | 2.94 |
| SUZ-SHWM30VAH | -7 | 3.0 | 2.95 | 3.0 | 2.42 | 2.9 | 2.07 |
| | 2 | 3.0 | 3.67 | 2.4 | 2.85 | 4.0 | 2.38 |
| | | 2.0 | 4.02 | 1.9 | 3.12 | 1.9 | 2.57 |
| | 7 | 3.0 | 5.11 | 2.4 | 3.71 | 2.9 | 2.94 |
| SUZ-SWM40VA2(-SC) | -7 | 3.6 | 3.12 | 2.4 | 2.52 | 2.3 | 2.14 |
| | 2 | 3.2 | 3.94 | 3.2 | 3.06 | 4.0 | 2.47 |
| | | 2.0 | 4.02 | 1.9 | 3.12 | 1.9 | 2.57 |
| | 7 | 3.0 | 5.11 | 2.4 | 3.71 | 2.9 | 2.93 |
| SUZ-SHWM40VAH(-SC) | -7 | 2.8 | 3.38 | 2.7 | 2.18 | 2.6 | 1.70 |
| | 2 | 3.2 | 3.71 | 3.2 | 2.56 | 4.0 | 2.20 |
| | | 2.6 | 3.84 | 2.5 | 2.70 | 2.4 | 2.04 |
| | 7 | 3.0 | 4.77 | 3.0 | 3.08 | 2.3 | 2.86 |
| SUZ-SWM60VA2(-SC) | -7 | 2.8 | 3.64 | 2.7 | 2.18 | 2.6 | 1.70 |
| | 2 | 4.8 | 3.86 | 4.8 | 2.53 | 4.0 | 2.09 |
| | | 2.6 | 4.21 | 2.5 | 2.70 | 2.4 | 2.04 |
| | 7 | 5.0 | 4.85 | 4.0 | 3.32 | 4.0 | 2.94 |
| SUZ-SHWM60VAH(-SC) | -7 | 4.8 | 2.95 | 4.8 | 2.22 | 4.8 | 1.78 |
| | 2 | 4.8 | 3.65 | 4.8 | 2.79 | 4.8 | 2.23 |
| | | 3.8 | 4.17 | 3.5 | 3.12 | 3.3 | 2.54 |
| | 7 | 3.6 | 4.98 | 3.4 | 3.63 | 4.0 | 2.95 |
| SUZ-SWM80VA2 | -7 | 3.9 | 2.95 | 3.5 | 2.20 | 3.4 | 1.78 |
| | 2 | 6.0 | 3.66 | 6.0 | 2.87 | 6.0 | 2.32 |
| | | 3.8 | 4.17 | 3.5 | 3.12 | 3.3 | 2.54 |
| | 7 | 6.0 | 5.10 | 4.8 | 3.66 | 4.8 | 3.01 |
| SUZ-SWM80VAH2 | -7 | 7.0 | 2.76 | 3.5 | 2.05 | 3.4 | 1.67 |
| | 2 | 6.0 | 3.41 | 6.0 | 2.71 | 6.0 | 2.22 |
| | | 3.8 | 4.17 | 3.5 | 3.12 | 3.3 | 2.54 |
| | 7 | 6.0 | 5.10 | 4.8 | 3.66 | 4.8 | 3.01 |
| SUZ-SWM100VA | -7 | 3.9 | 2.95 | 3.5 | 2.22 | 3.4 | 1.78 |
| | 2 | 7.2 | 3.36 | 6.8 | 2.79 | 6.8 | 2.36 |
| | | 3.8 | 4.17 | 3.5 | 3.12 | 3.3 | 2.54 |
| | 7 | 10.0 | 5.08 | 6.0 | 3.65 | 3.3 | 2.93 |

| Water outlet temperature[℃] | | 35 | | 45 | | 55 | |
|---|---|---|---|---|---|---|---|
| Ambient temperature[℃] | | Capacity | COP | Capacity | COP | Capacity | COP |
| SUZ-SWM100VAH | -7 | 7.5 | 2.73 | 3.5 | 2.06 | 3.4 | 1.67 |
| | 2 | 7.2 | 3.18 | 6.8 | 2.66 | 6.8 | 2.27 |
| | | 3.8 | 4.17 | 3.5 | 3.12 | 3.3 | 2.54 |
| | 7 | 10.0 | 5.08 | 6.0 | 3.65 | 3.3 | 2.93 |
| PUZ-SWM60VAA | -7 | 5.0 | 3.23 | 5.2 | 2.53 | 5.2 | 2.07 |
| | 2 | 5.2 | 3.74 | 5.0 | 2.91 | 4.3 | 2.27 |
| | | 4.3 | 3.79 | 4.2 | 2.98 | 4.0 | 2.32 |
| | 7 | 5.5 | 4.95 | 5.3 | 3.69 | 4.5 | 2.73 |
| PUZ-SWM80V/YAA | -7 | 5.0 | 3.23 | 5.2 | 2.53 | 5.4 | 2.07 |
| | 2 | 5.2 | 3.74 | 5.0 | 2.93 | 4.3 | 2.27 |
| | | 4.3 | 3.79 | 4.2 | 2.98 | 4.0 | 2.32 |
| | 7 | 5.5 | 4.95 | 5.3 | 3.69 | 4.8 | 2.68 |
| PUZ-SWM100V/YAA | -7 | 5.0 | 3.23 | 5.2 | 2.53 | 5.4 | 2.07 |
| | 2 | 5.2 | 3.74 | 5.0 | 2.93 | 4.3 | 2.27 |
| | | 4.3 | 3.79 | 4.2 | 2.98 | 4.0 | 2.32 |
| | 7 | 5.5 | 4.95 | 5.3 | 3.69 | 4.8 | 2.68 |
| PUZ-SWM120V/YAA | -7 | 6.6 | 3.18 | 6.4 | 2.53 | 6.2 | 2.12 |
| | 2 | 7.0 | 3.74 | 6.9 | 3.03 | 6.8 | 2.22 |
| | | 6.0 | 4.09 | 5.9 | 3.18 | 5.8 | 2.32 |
| | 7 | 5.6 | 5.15 | 5.4 | 3.79 | 5.2 | 2.83 |
| PUZ-SWM140V/YAA | -7 | 6.9 | 3.33 | 6.7 | 2.63 | 6.5 | 2.17 |
| | 2 | 7.3 | 3.74 | 7.2 | 2.98 | 7.0 | 2.22 |
| | | 6.0 | 4.04 | 5.9 | 3.23 | 5.8 | 2.42 |
| | 7 | 6.7 | 5.05 | 6.6 | 3.79 | 6.5 | 2.83 |
| PUZ-SHWM60VAA | -7 | 5.4 | 3.23 | 6.0 | 2.53 | 6.0 | 2.02 |
| | 2 | 5.2 | 3.89 | 5.0 | 3.03 | 4.3 | 2.27 |
| | | 4.3 | 3.99 | 4.2 | 3.08 | 4.0 | 2.32 |
| | 7 | 5.6 | 5.10 | 5.4 | 3.74 | 4.8 | 2.73 |
| PUZ-SHWM80V/YAA | -7 | 5.4 | 3.23 | 6.0 | 2.58 | 6.0 | 2.07 |
| | 2 | 5.2 | 3.89 | 5.0 | 3.03 | 4.3 | 2.27 |
| | | 4.3 | 3.99 | 4.2 | 3.08 | 4.0 | 2.32 |
| | 7 | 5.6 | 5.10 | 5.4 | 3.74 | 4.8 | 2.73 |
| PUZ-SHWM100V/YAA | -7 | 5.4 | 3.23 | 6.0 | 2.58 | 6.0 | 2.07 |
| | 2 | 5.2 | 3.89 | 5.0 | 3.03 | 4.3 | 2.27 |
| | | 4.3 | 3.99 | 4.2 | 3.08 | 4.0 | 2.32 |
| | 7 | 5.6 | 5.10 | 5.4 | 3.74 | 4.8 | 2.73 |
| PUZ-SHWM120V/YAA | -7 | 6.6 | 3.28 | 6.4 | 2.63 | 6.2 | 2.12 |
| | 2 | 7.0 | 3.74 | 6.9 | 3.03 | 6.8 | 2.22 |
| | | 6.0 | 4.09 | 5.9 | 3.18 | 5.8 | 2.32 |
| | 7 | 5.6 | 5.15 | 5.4 | 3.79 | 5.2 | 2.83 |
| PUZ-SHWM140V/YAA | -7 | 6.9 | 3.33 | 6.7 | 2.63 | 6.5 | 2.17 |
| | 2 | 7.3 | 3.74 | 7.2 | 2.98 | 7.0 | 2.22 |
| | | 6.0 | 4.04 | 5.9 | 3.23 | 5.8 | 2.42 |
| | 7 | 6.7 | 5.05 | 6.6 | 3.79 | 6.5 | 2.83 |
| PUD-SWM60VAA(-BS) | -7 | 5.0 | 3.20 | 5.2 | 2.50 | 5.4 | 2.05 |
| | 2 | 5.2 | 3.70 | 5.0 | 2.90 | 4.3 | 2.25 |
| | | 4.3 | 3.75 | 4.2 | 2.95 | 4.0 | 2.30 |
| | 7 | 5.5 | 4.90 | 5.3 | 3.65 | 4.5 | 2.70 |
| PUD-SWM80VAA(-BS)<br>PUD-SWM80YAA(-BS) | -7 | 5.0 | 3.20 | 5.2 | 2.50 | 5.4 | 2.05 |
| | 2 | 5.2 | 3.70 | 5.0 | 2.90 | 4.3 | 2.25 |
| | | 4.3 | 3.75 | 4.2 | 2.95 | 4.0 | 2.30 |
| | 7 | 5.5 | 4.90 | 5.3 | 3.65 | 4.8 | 2.65 |
| PUD-SWM100VAA(-BS)<br>PUD-SWM100YAA(-BS) | -7 | 6.6 | 3.15 | 6.4 | 2.50 | 6.2 | 2.00 |
| | 2 | 7.0 | 3.70 | 6.9 | 3.00 | 6.8 | 2.20 |
| | | 6.0 | 4.05 | 5.9 | 3.15 | 5.8 | 2.30 |
| | 7 | 5.6 | 5.10 | 5.4 | 3.75 | 5.2 | 2.80 |
| PUD-SWM120VAA(-BS)<br>PUD-SWM120YAA(-BS) | -7 | 6.6 | 3.15 | 6.4 | 2.50 | 6.2 | 2.10 |
| | 2 | 7.0 | 3.70 | 6.9 | 3.00 | 6.8 | 2.20 |
| | | 6.0 | 4.05 | 5.9 | 3.15 | 5.8 | 2.30 |
| | 7 | 5.6 | 5.10 | 5.4 | 3.75 | 5.2 | 2.80 |
| PUD-SHWM60VAA(-BS) | -7 | 5.4 | 3.20 | 6.0 | 2.50 | 6.0 | 2.00 |
| | 2 | 5.2 | 3.85 | 5.0 | 3.00 | 4.3 | 2.25 |
| | | 4.3 | 3.95 | 4.2 | 3.05 | 4.0 | 2.30 |
| | 7 | 5.6 | 5.05 | 5.4 | 3.70 | 4.8 | 2.70 |
| PUD-SHWM80VAA(-BS)<br>PUD-SHWM80YAA(-BS) | -7 | 5.4 | 3.20 | 6.0 | 2.55 | 6.0 | 2.10 |
| | 2 | 5.2 | 3.85 | 5.0 | 3.00 | 4.3 | 2.25 |
| | | 4.3 | 3.95 | 4.2 | 3.05 | 4.0 | 2.30 |
| | 7 | 5.6 | 5.05 | 5.4 | 3.70 | 4.8 | 2.70 |

| Water outlet temperature[℃] | | 35 | | 45 | | 55 | |
|---|---|---|---|---|---|---|---|
| Ambient temperature[℃] | | Capacity | COP | Capacity | COP | Capacity | COP |
| PUD-SHWM100VAA(-BS)<br>PUD-SHWM100YAA(-BS) | -7 | 6.6 | 3.25 | 6.4 | 2.60 | 6.2 | 2.10 |
| | 2 | 7.0 | 3.70 | 6.9 | 3.00 | 6.8 | 2.20 |
| | | 6.0 | 4.05 | 5.9 | 3.15 | 5.8 | 2.30 |
| | 7 | 5.6 | 5.10 | 5.4 | 3.75 | 5.2 | 2.80 |
| PUD-SHWM120VAA(-BS)<br>PUD-SHWM120YAA(-BS) | -7 | 6.6 | 3.25 | 6.4 | 2.60 | 6.2 | 2.10 |
| | 2 | 7.0 | 3.70 | 6.9 | 3.00 | 6.8 | 2.20 |
| | | 6.0 | 4.05 | 5.9 | 3.15 | 5.8 | 2.30 |
| | 7 | 5.6 | 5.10 | 5.4 | 3.75 | 5.2 | 2.80 |
| PUD-SHWM140VAA(-BS)<br>PUD-SHWM140YAA(-BS) | -7 | 6.9 | 3.30 | 6.7 | 2.60 | 6.5 | 2.15 |
| | 2 | 7.3 | 3.70 | 7.2 | 2.95 | 7.0 | 2.20 |
| | | 6.0 | 4.00 | 5.9 | 3.20 | 5.8 | 2.40 |
| | 7 | 6.7 | 5.00 | 6.6 | 3.75 | 6.5 | 2.80 |
| PXZ-4F75VG | -7 | 3.7 | 2.67 | 3.6 | 2.12 | - | - |
| | 2 | 5.4 | 3.15 | 5.2 | 2.67 | 5.0 | 2.18 |
| | 7 | 6.0 | 4.31 | 6.0 | 3.43 | 6.0 | 2.55 |
| PXZ-5F85VG | -7 | 4.1 | 2.50 | 3.4 | 1.83 | - | - |
| | 2 | 6.2 | 3.25 | 6.0 | 2.62 | 5.7 | 1.99 |
| | 7 | 4.7 | 4.78 | 4.5 | 3.83 | 4.1 | 3.08 |

## 5.5 Correcting capacity for changes in the length of refrigerant piping

### Split-type units

■ **SUZ-SWM40VA** **SUZ-SWM60VA** **SUZ-SWM80VA**

<Method for obtaining the equivalent piping length>

Equivalent length = (piping length[*1]) + 0.3 × (number of bends in the piping)

[*1] Max piping length of SUZ series is 30m.

**<Cooling>**

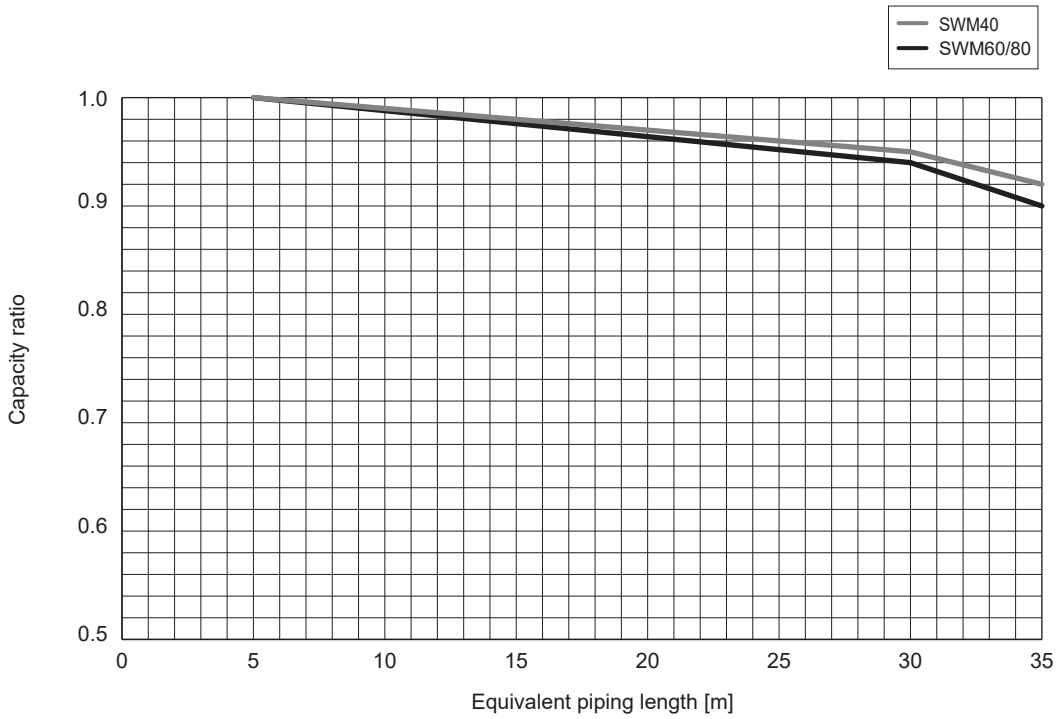


**<Heating>**

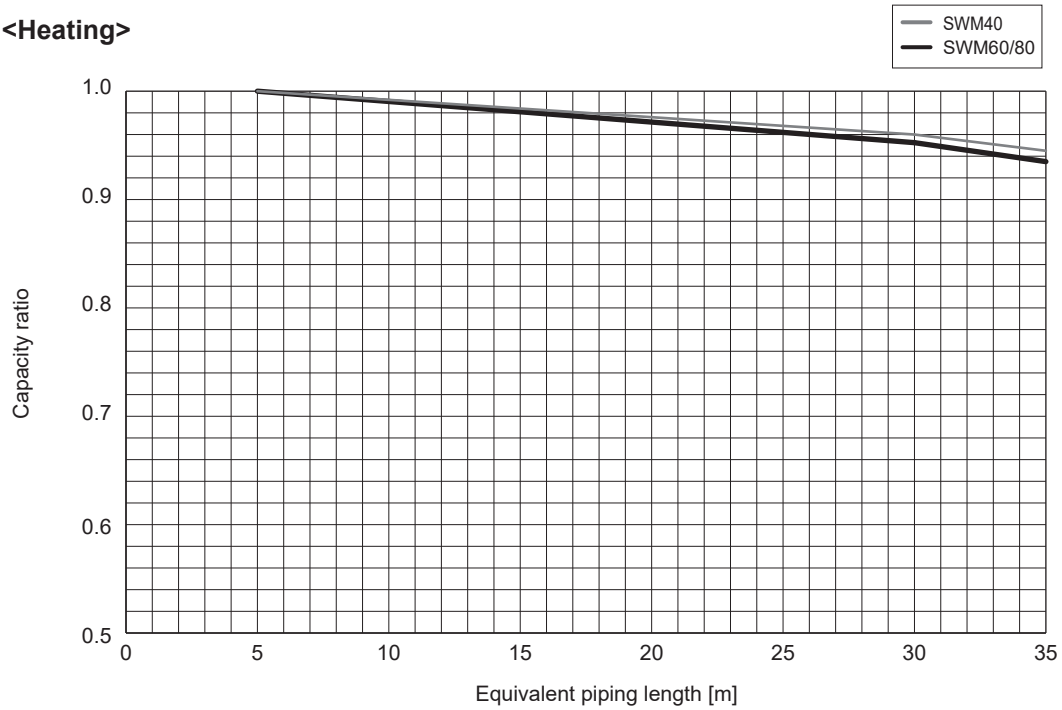

## Split-type units

■ **SUZ-SWM30VA** **SUZ-SHWM30VAH**
**SUZ-SWM40VA2(-SC)** **SUZ-SHWM40VAH(-SC)** **SUZ-SWM60VA2(-SC)**

<Method for obtaining the equivalent piping length>
Equivalent length = (piping length[*1]) + 0.3 × (number of bends in the piping)

[*1] Max piping length of SUZ series is 30m.

**<Cooling>**

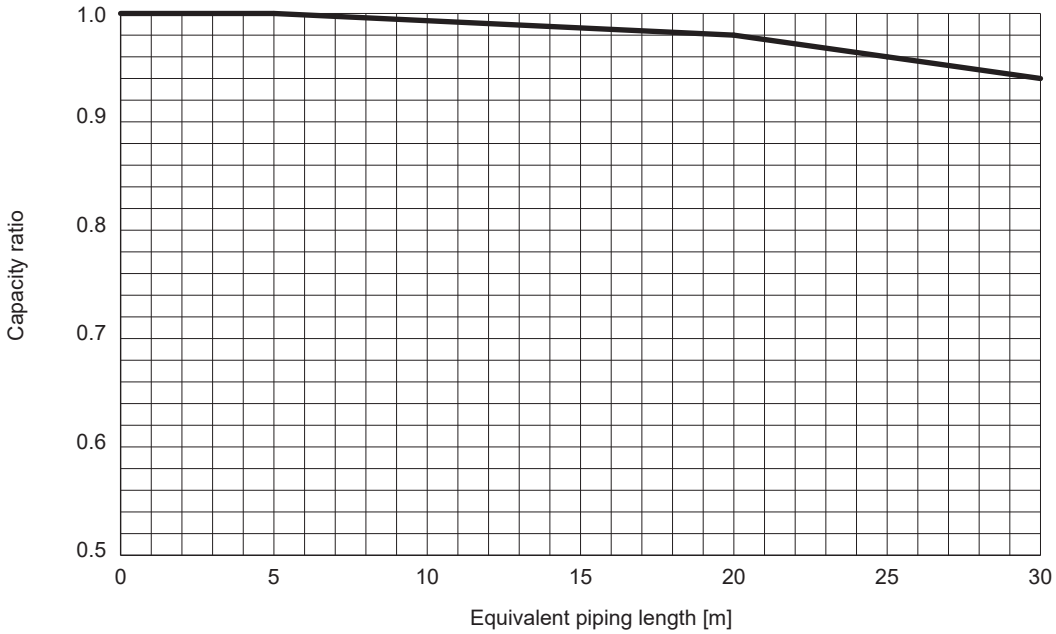


**<Heating>**

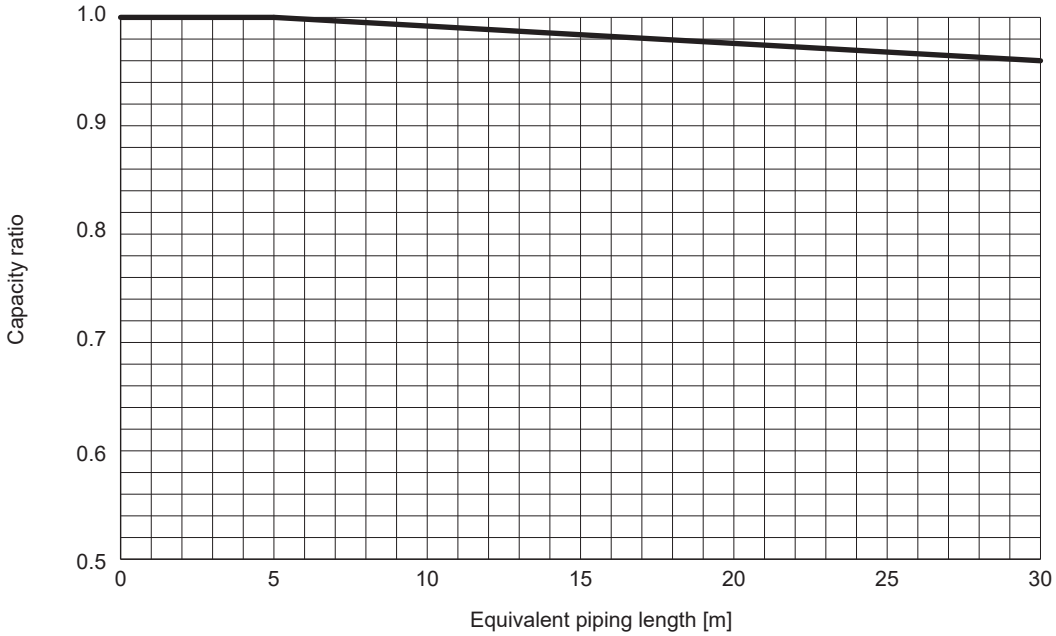

## Split-type units

■ **SUZ-SHWM60VAH(-SC)** **SUZ-SWM80VA(H)2** **SUZ-SWM100VA(H)**

<Method for obtaining the equivalent piping length>

Equivalent length = (piping length[*1]) + 0.3 × (number of bends in the piping)

[*1] Max piping length of SUZ series is 30m.

**<Cooling>**

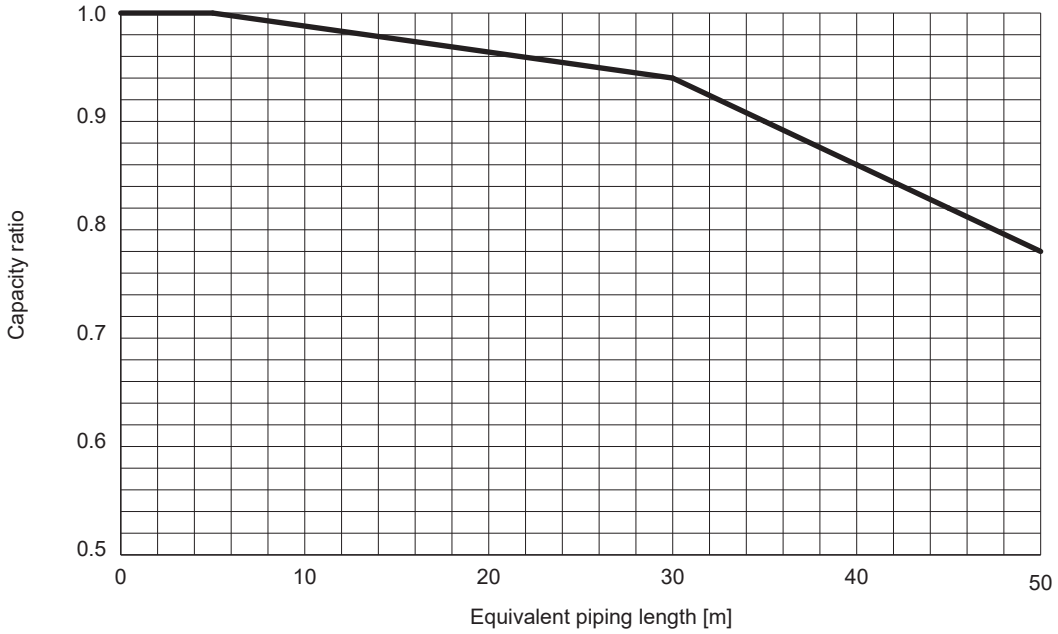


**<Heating>**

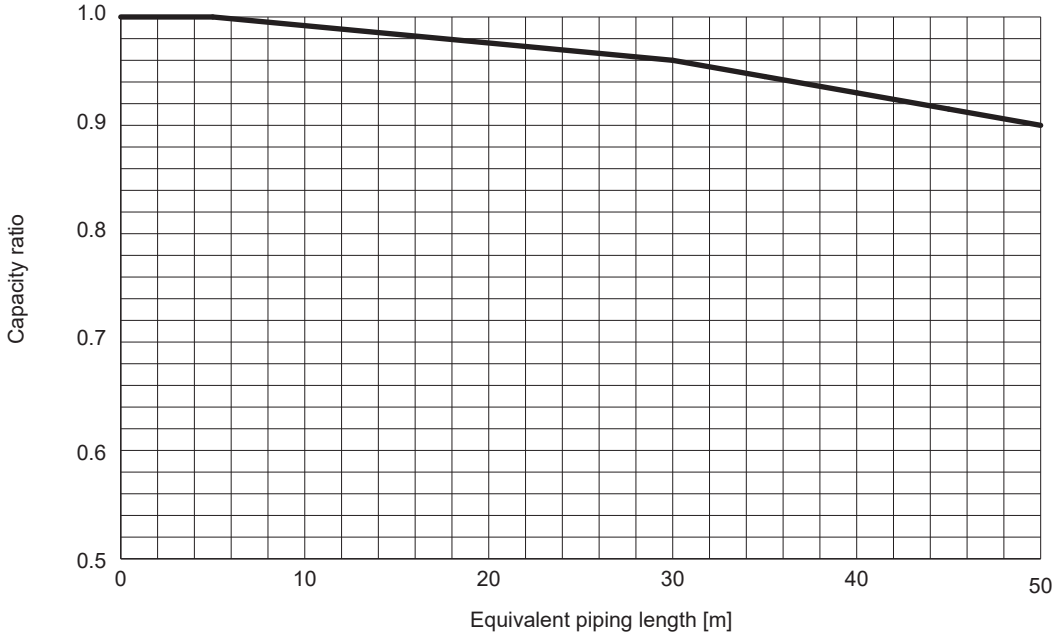

■ **PUZ-SWM60VAA PUZ-SWM80VAA PUZ-SWM80YAA PUZ-SWM100VAA PUZ-SWM100YAA**
**PUZ-SHWM60VAA PUZ-SHWM80VAA PUZ-SHWM80YAA PUZ-SHWM100VAA PUZ-SHWM100YAA**

<Method for obtaining the equivalent piping length>
Equivalent length = (piping length) + 0.3 × (number of bends in the piping)

**<Cooling>**

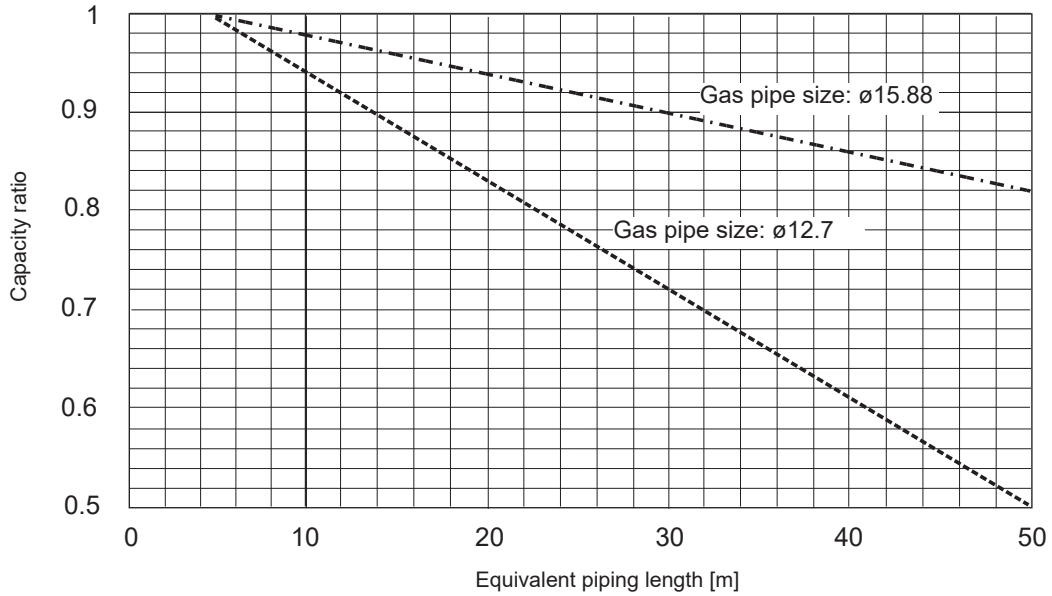


**<Heating>**

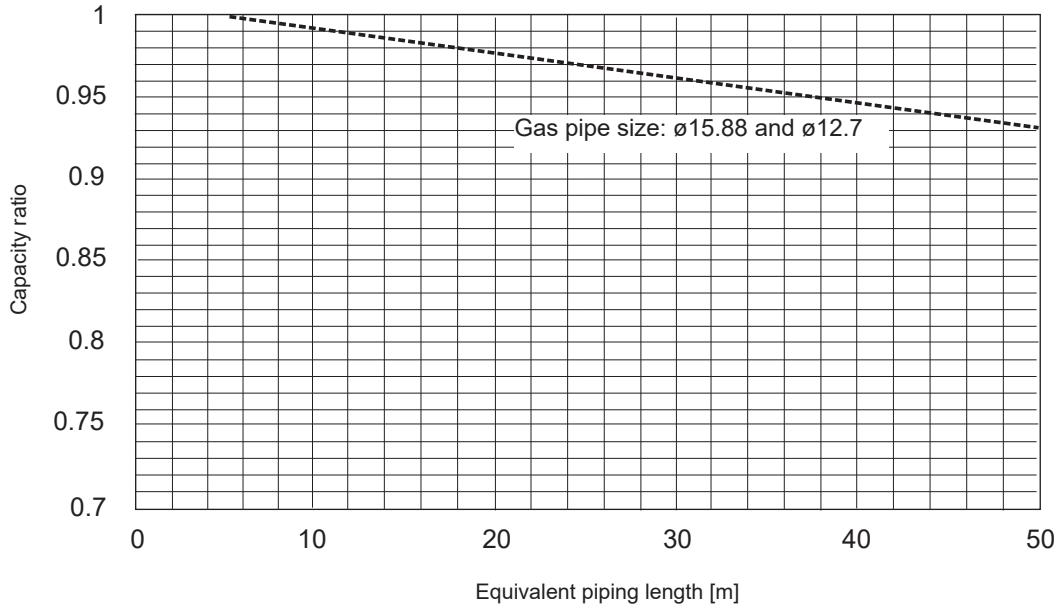

■ **PUZ-SWM120VAA PUZ-SWM120YAA PUZ-SHWM120VAA PUZ-SHWM120YAA**

<Method for obtaining the equivalent piping length>
Equivalent length = (piping length) + 0.3 × (number of bends in the piping)

**<Cooling>**

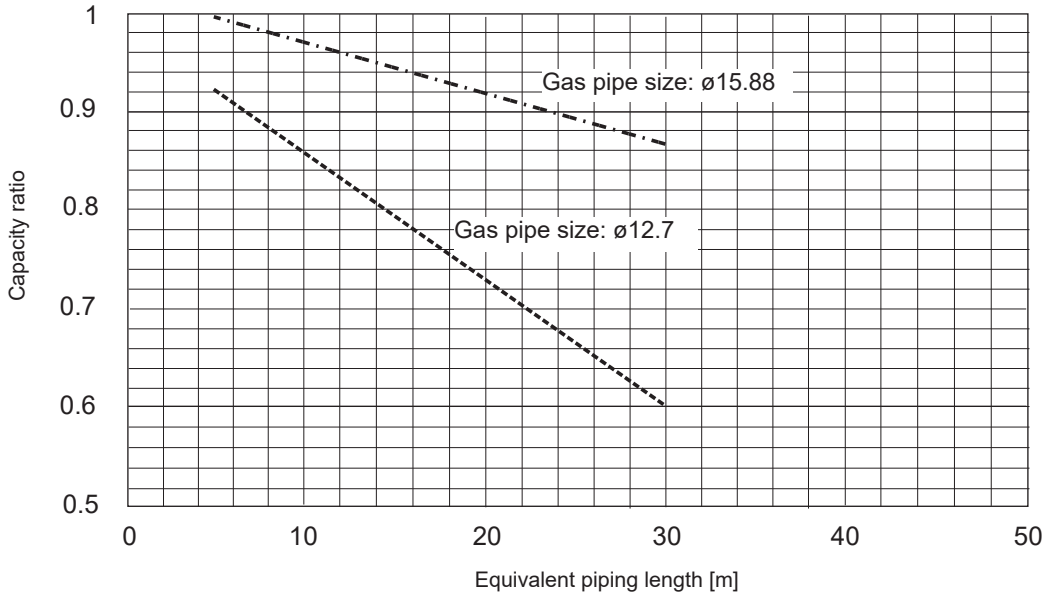


**<Heating>**

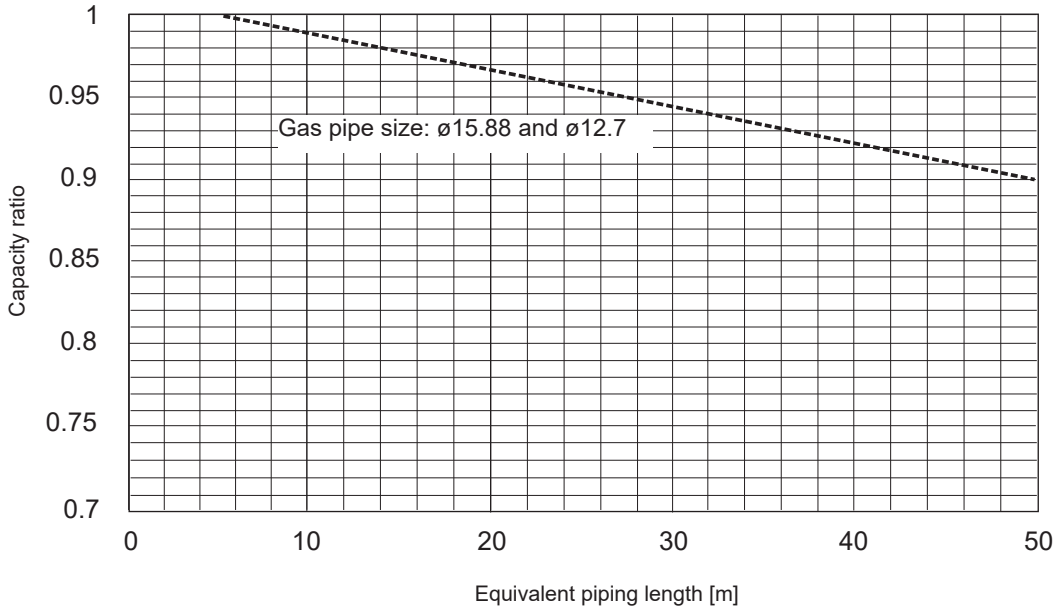

■ **PUZ-SWM140VAA PUZ-SWM140YAA PUZ-SHWM140VAA PUZ-SHWM140YAA**

<Method for obtaining the equivalent piping length>
Equivalent length = (piping length) + 0.3 × (number of bends in the piping)

**<Cooling>**

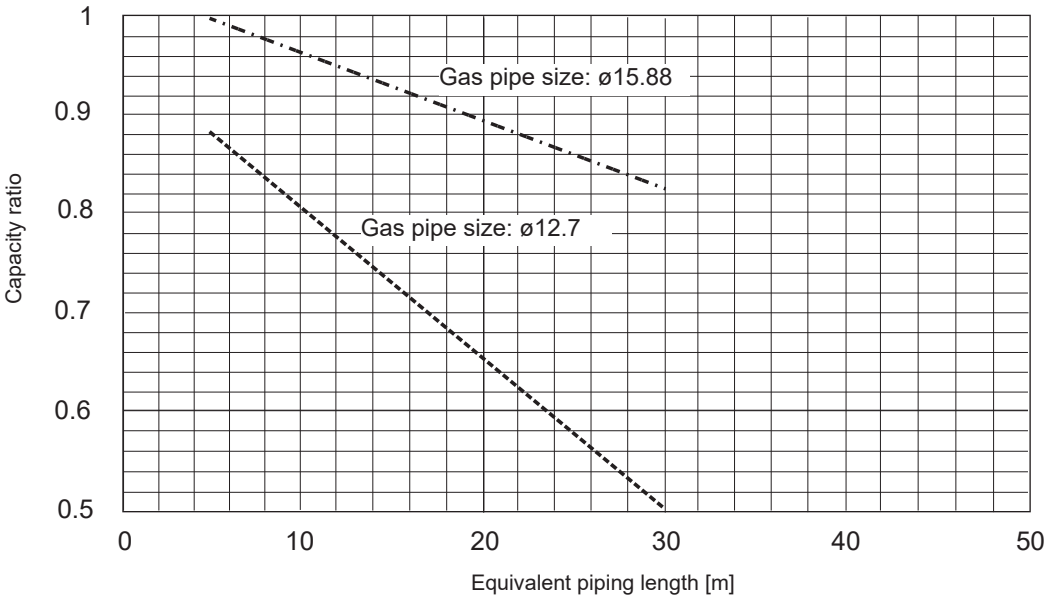


**<Heating>**

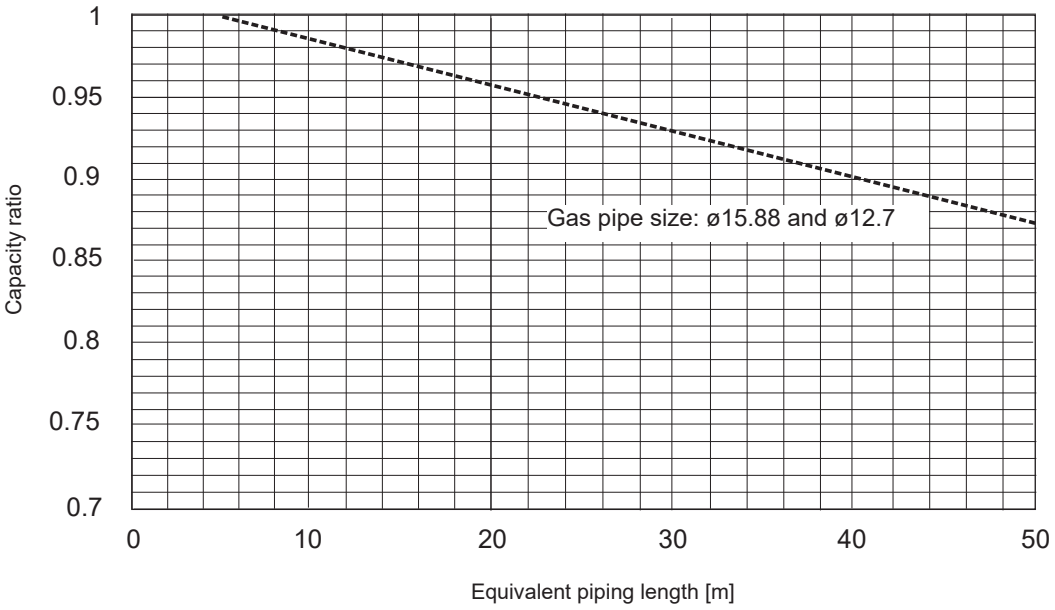

■ **PUD-SWM60VAA(-BS)** **PUD-SHWM60VAA(-BS)** **PUD-SWM80VAA(-BS)** **PUD-SHWM80VAA(-BS)**
**PUD-SWM80YAA(-BS)** **PUD-SHWM80YAA(-BS)** **PUD-SWM100VAA(-BS)** **PUD-SHWM100VAA(-BS)**
**PUD-SWM100YAA(-BS)** **PUD-SHWM100YAA(-BS)** **PUD-SWM120VAA(-BS)** **PUD-SHWM120VAA(-BS)**
**PUD-SWM120YAA(-BS)** **PUD-SHWM120YAA(-BS)**

<Method for obtaining the equivalent piping length>
Equivalent length = (piping length) + 0.3 × (number of bends in the piping)

**<Heating>**

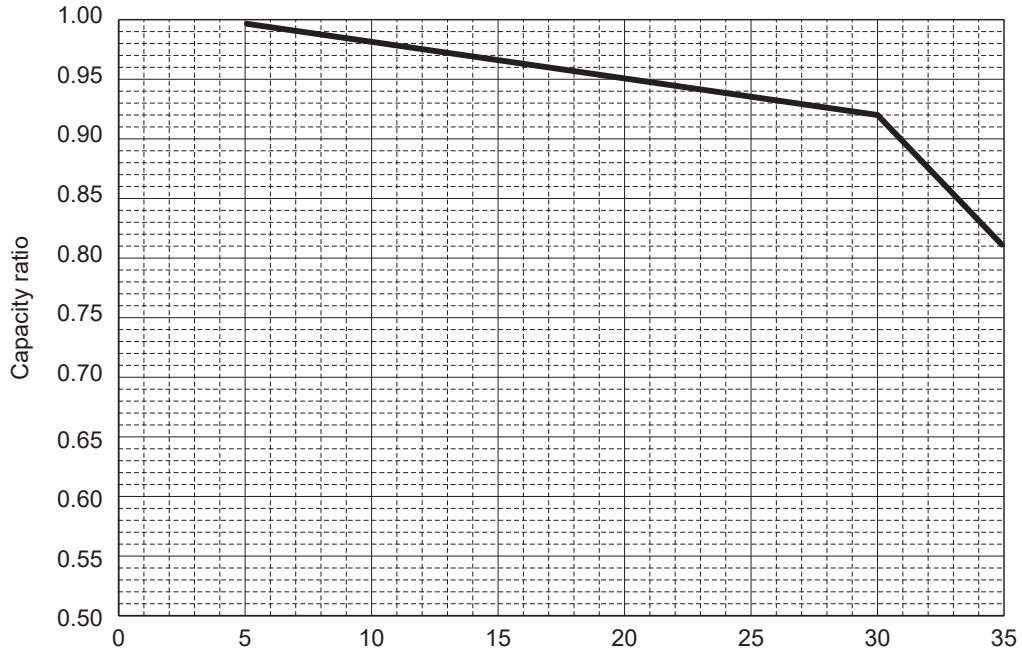


■ **PUD-SHWM140VAA(-BS)** **PUD-SHWM140YAA(-BS)**

<Method for obtaining the equivalent piping length>
Equivalent length = (piping length) + 0.3 × (number of bends in the piping)

**<Heating>**

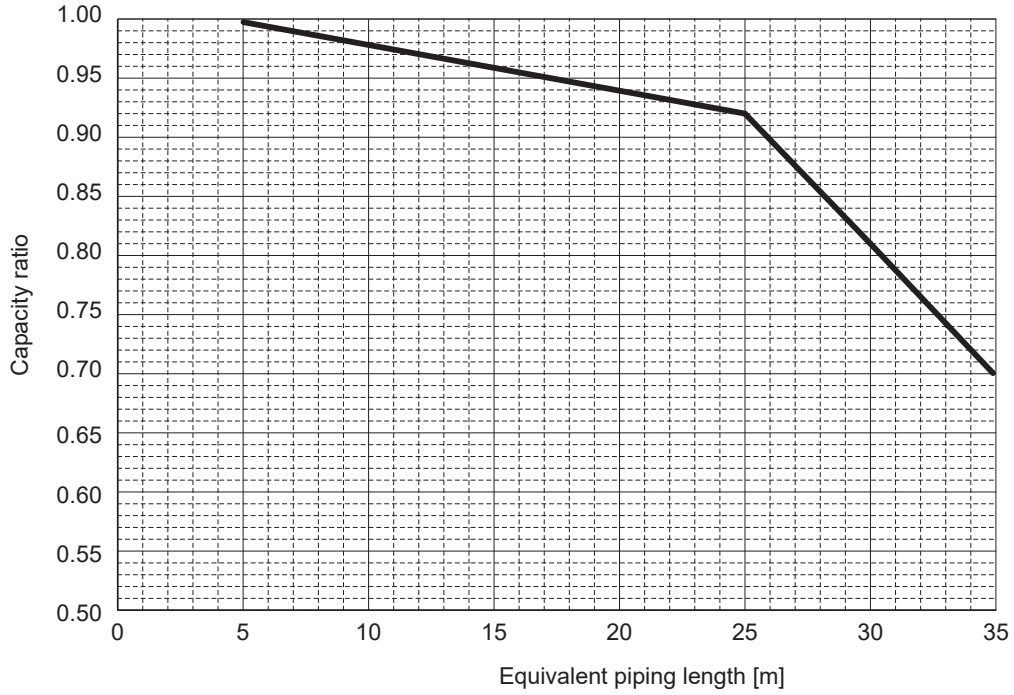

■ **PXZ-4F75VG**
**PXZ-5F85VG**

<Method for obtaining the equivalent piping length>
Equivalent length = (piping length[*1]) + 0.3 × (number of bends in the piping)

[*1] Max piping length of PXZ series is 30m.

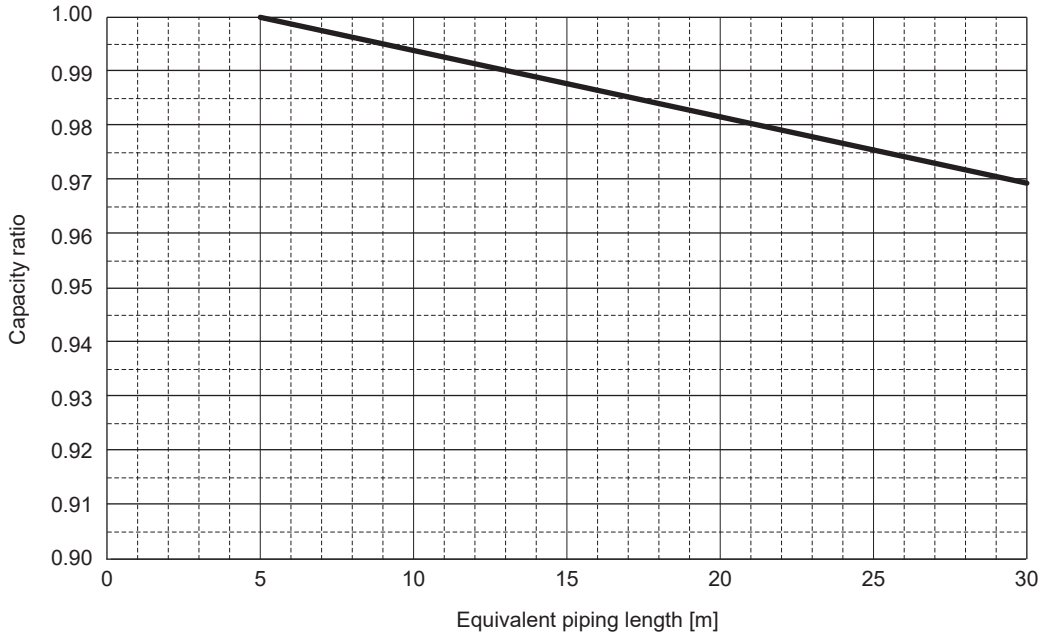

## (1)Packaged-type units

### ■ PUZ-WM50VHA(-BS)

| MODE | SPL(dBA) | LINE |
|---|---|---|
| COOLING | 52 | ○——○ |
| HEATING | 52 | ●——● |

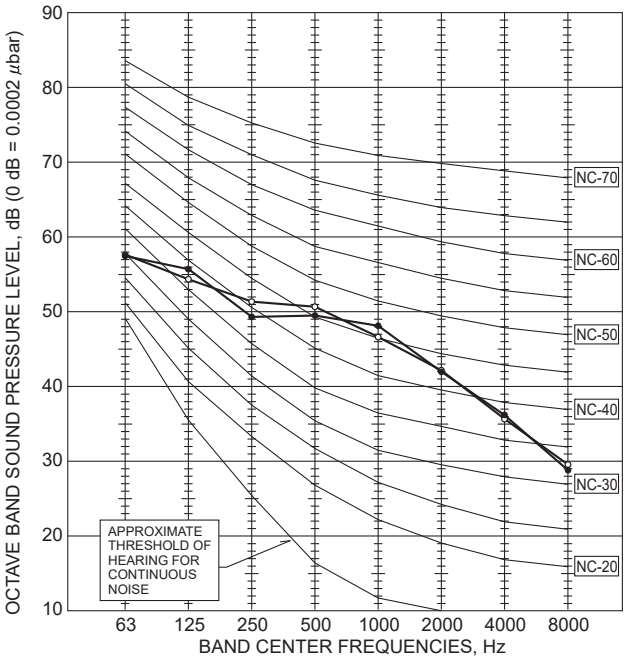


### ■ PUZ-WM60VAA(-BS) PUZ-WM85VAA(-BS) PUZ-WM85YAA(-BS)

| MODE | SPL(dBA) | LINE |
|---|---|---|
| COOLING | 45 | ○——○ |
| HEATING | 45 | ●——● |

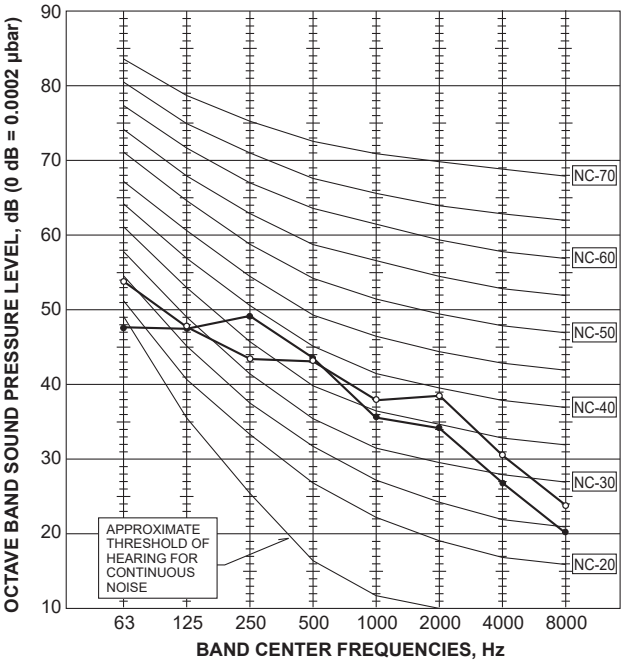


### ■ PUZ-WM112VAA(-BS) PUZ-WM112YAA(-BS)

| MODE | SPL(dBA) | LINE |
|---|---|---|
| COOLING | 49 | ○——○ |
| HEATING | 47 | ●——● |

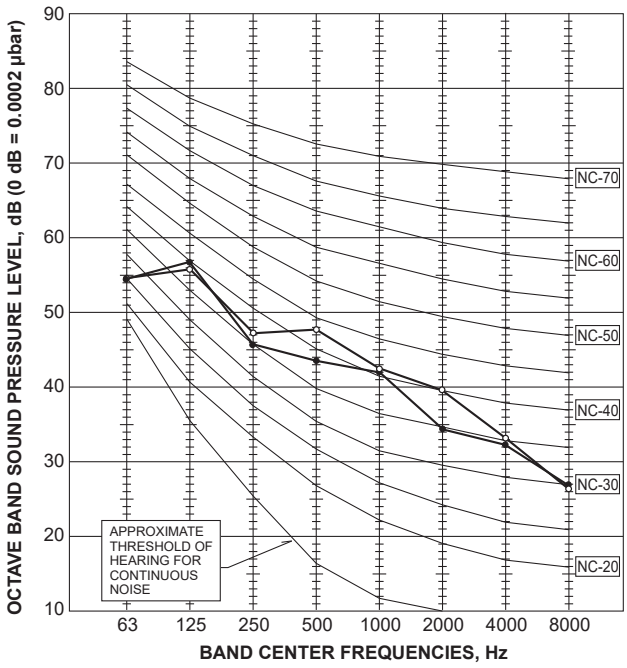


### ■ PUZ-HWM140VHA(-BS) PUZ-HWM140YHA(-BS)

| MODE | SPL(dBA) | LINE |
|---|---|---|
| COOLING | 53 | ○——○ |
| HEATING | 53 | ●——● |

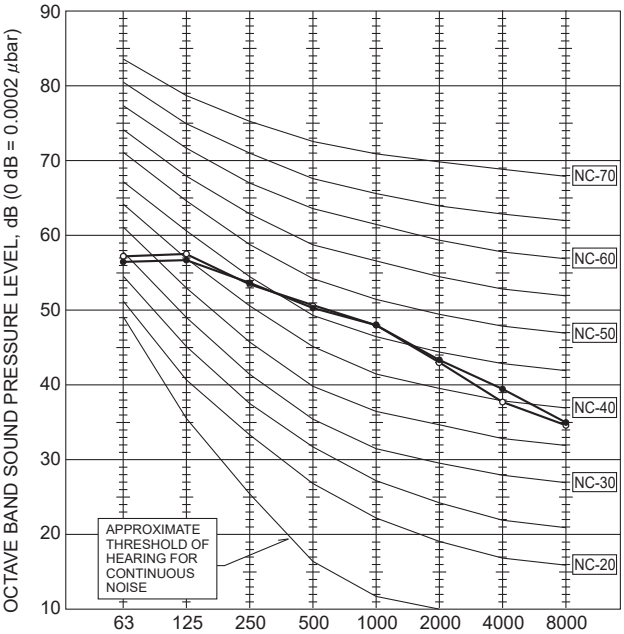


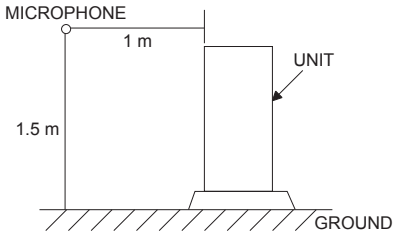


**<Notes>**
**1) Sound data is taken when the system is running stably.**
**2) Relatively large noise could be heard transiently in the case 4-way valve, or LEV operates.**

## (2)Split-type units

### ■ SUZ-SWM40VA

| FUNCTION | SPL(dBA) | LINE |
|---|---|---|
| COOLING | 49 | ●——● |
| HEATING | 44 | ○——○ |

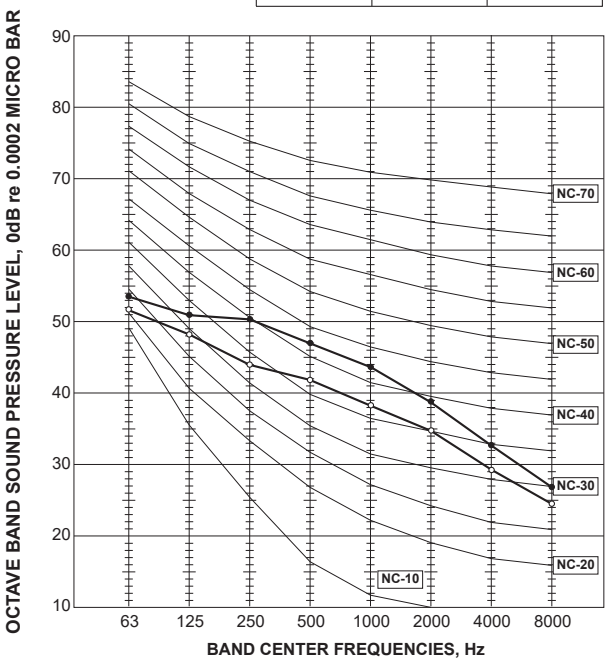


### ■ SUZ-SWM60VA

| FUNCTION | SPL(dBA) | LINE |
|---|---|---|
| COOLING | 49 | ●——● |
| HEATING | 45 | ○——○ |

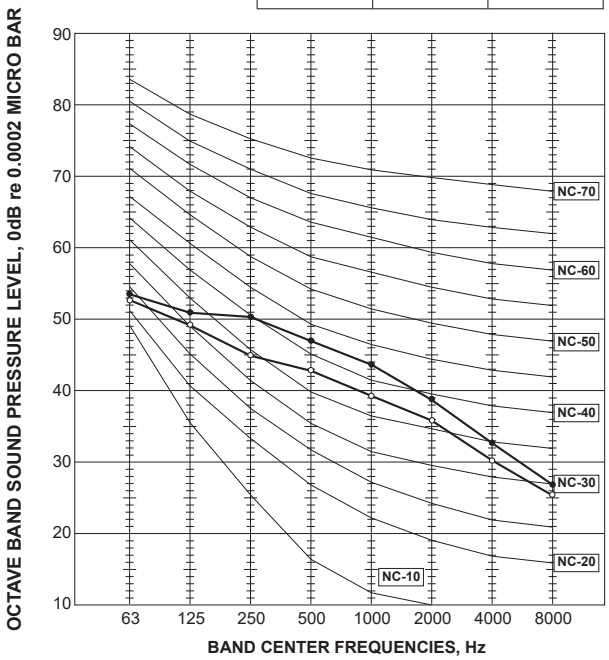


### ■ SUZ-SWM80VA

| FUNCTION | SPL(dBA) | LINE |
|---|---|---|
| COOLING | 49 | ●——● |
| HEATING | 46 | ○——○ |

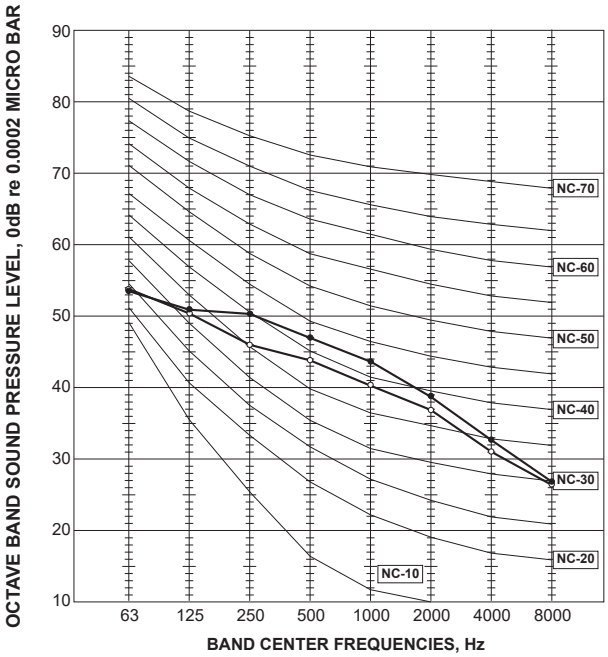


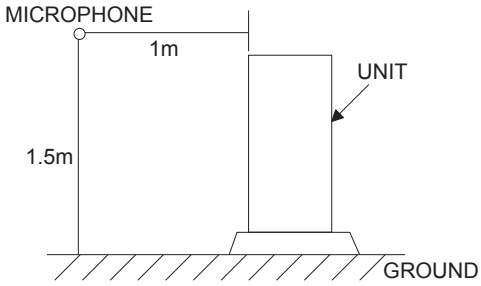


**<Notes>**
**1) Sound data is taken when the system is running stably.**
**2) Relatively large noise could be heard transiently in the case 4-way valve, or LEV operates.**

## ■ SUZ-S(H)WM30VA(H)

| FUNCTION | SPL(dBA) | LINE |
|---|---|---|
| COOLING | 45 | ○——○ |
| HEATING | 43 | ●——● |

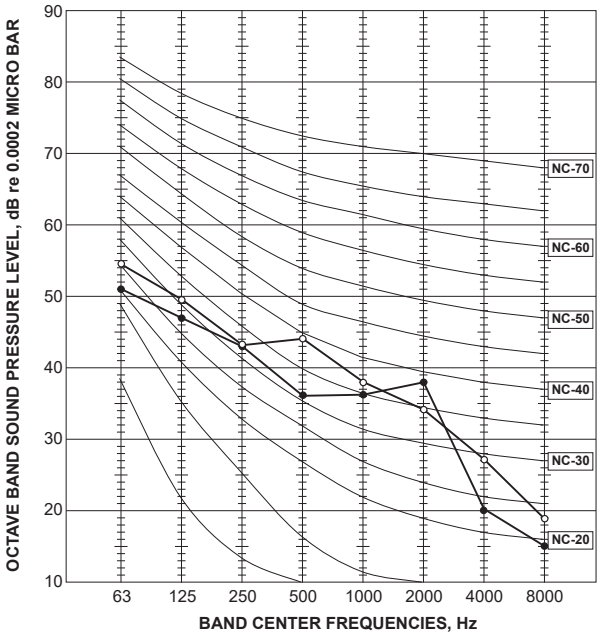


## ■ SUZ-SWM40VA2(-SC)

| FUNCTION | SPL(dBA) | LINE |
|---|---|---|
| COOLING | 46 | ○——○ |
| HEATING | 43 | ●——● |

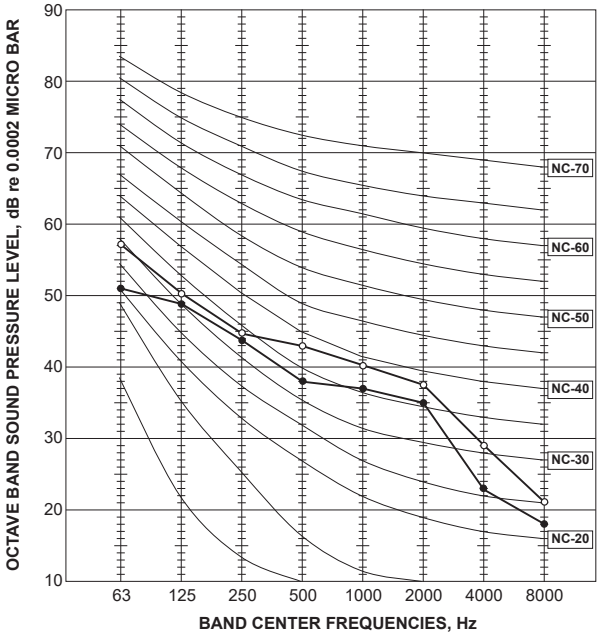


## ■ SUZ-SHWM40VAH(-SC)

| FUNCTION | SPL(dBA) | LINE |
|---|---|---|
| COOLING | 47 | ○——○ |
| HEATING | 44 | ●——● |

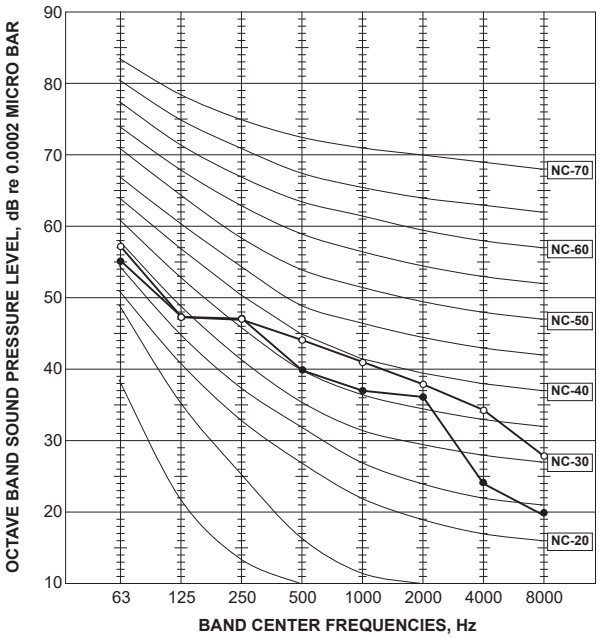


## ■ SUZ-SWM60VA2(-SC)

| FUNCTION | SPL(dBA) | LINE |
|---|---|---|
| COOLING | 47 | ○——○ |
| HEATING | 45 | ●——● |

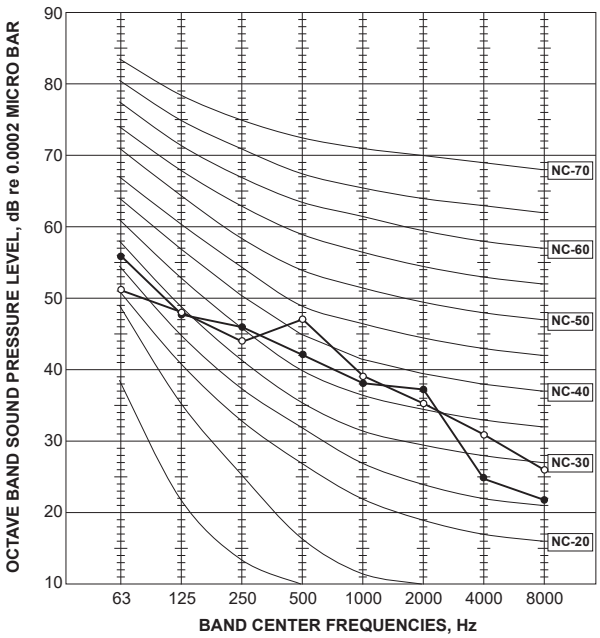


**<Notes>**
**1) Sound data is taken when the system is running stably.**
**2) Relatively large noise could be heard transiently in the case 4-way valve, or LEV operates.**

## ■ SUZ-SHWM60VAH(-SC)

| FUNCTION | SPL(dBA) | LINE |
|---|---|---|
| COOLING | 47 | ○——○ |
| HEATING | 45 | ●——● |

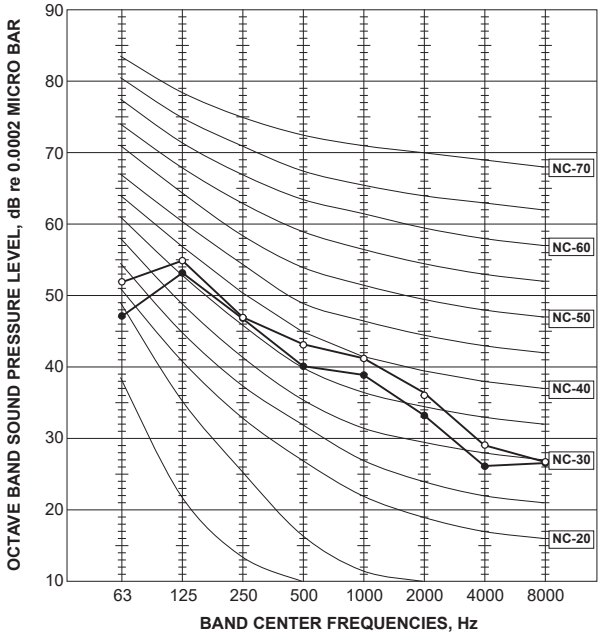


## ■ SUZ-SWM80VA(H)2

| FUNCTION | SPL(dBA) | LINE |
|---|---|---|
| COOLING | 47 | ○——○ |
| HEATING | 46 | ●——● |

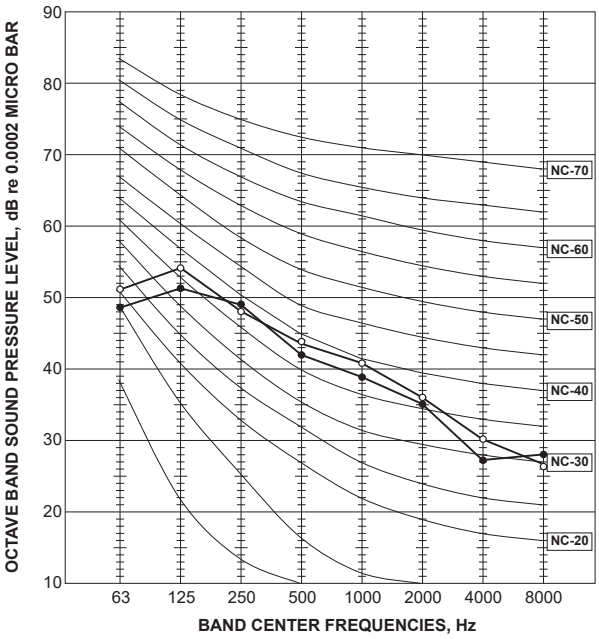


## ■ SUZ-SWM100VA(H)

| FUNCTION | SPL(dBA) | LINE |
|---|---|---|
| COOLING | 47 | ○——○ |
| HEATING | 47 | ●——● |

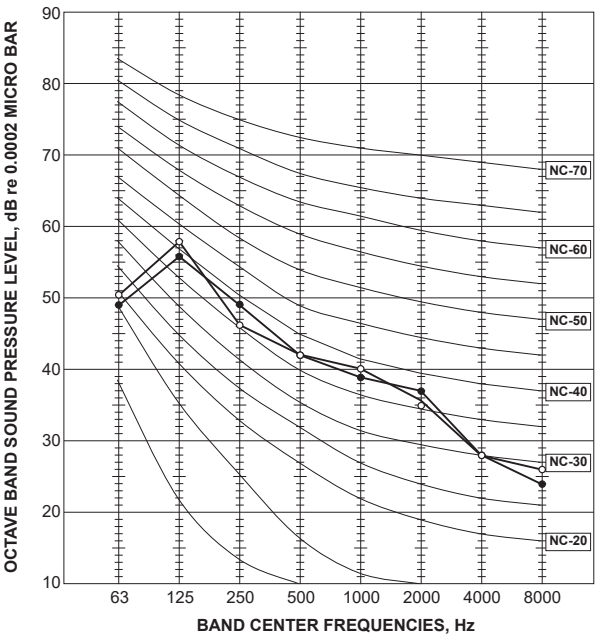


**Test conditions**

**Cooling: Dry-bulb temperature 35°C**

**Heating: Dry-bulb temperature 7°C Wet-bulb temperature 6°C**

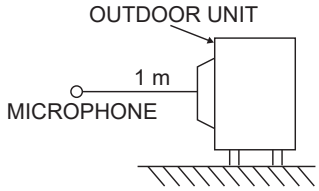

## ■ PUZ-SWM60VAA
## PUZ-SHWM60VAA

| MODE | SPL(dBA) | LINE |
|---|---|---|
| HEATING | 40(A7W35) | ●——● |
| COOLING | 45(A35W7) | ○——○ |

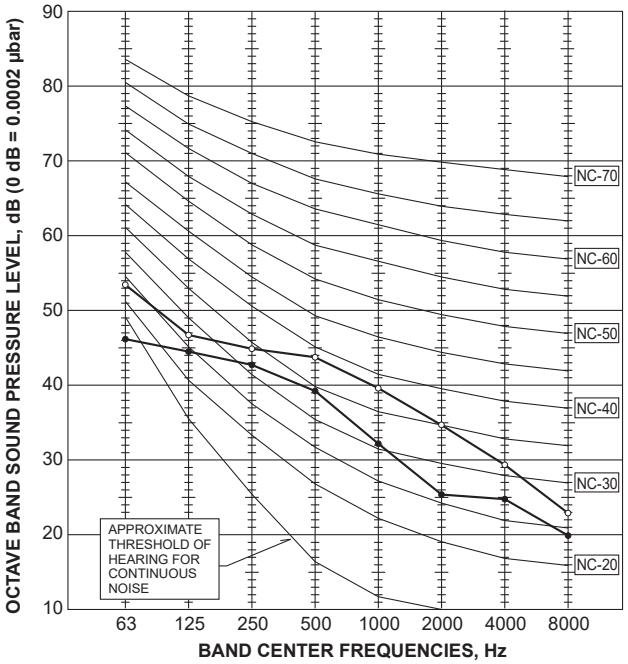


## ■ PUZ-SWM80VAA
## PUZ-SWM80YAA
## PUZ-SHWM80VAA
## PUZ-SHWM80YAA

| MODE | SPL(dBA) | LINE |
|---|---|---|
| HEATING | 41(A7W35) | ●——● |
| COOLING | 46(A35W7) | ○——○ |

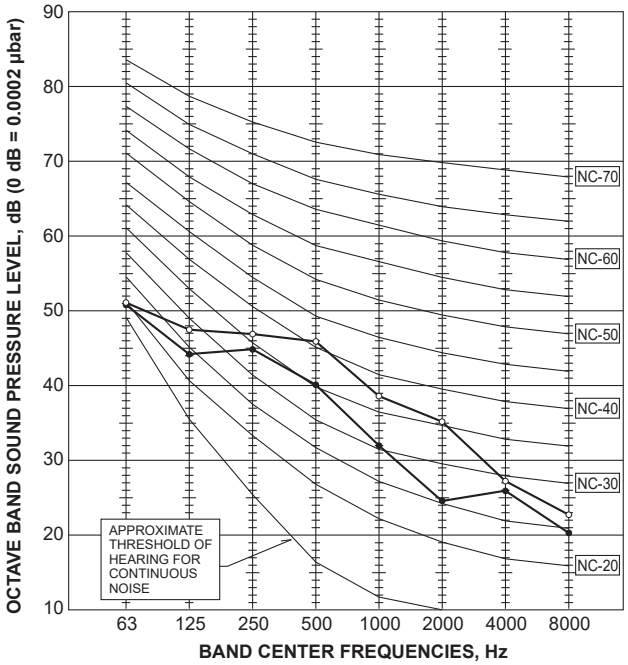


## ■ PUZ-SWM100VAA
## PUZ-SWM100YAA
## PUZ-SHWM100VAA
## PUZ-SHWM100YAA

| MODE | SPL(dBA) | LINE |
|---|---|---|
| HEATING | 44(A7W35) | ●——● |
| COOLING | 47(A35W7) | ○——○ |

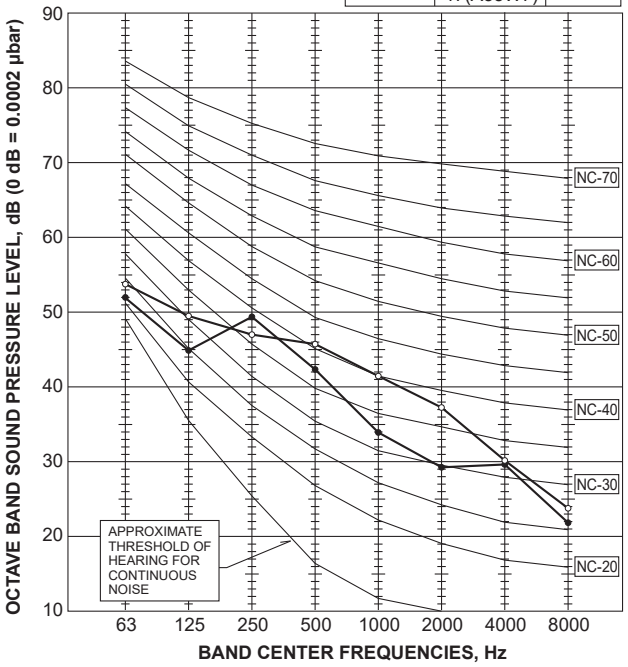


## ■ PUZ-SWM120VAA
## PUZ-SWM120YAA
## PUZ-SHWM120VAA
## PUZ-SHWM120YAA

| MODE | SPL(dBA) | LINE |
|---|---|---|
| HEATING | 45(A7W35) | ●——● |
| COOLING | 48(A35W7) | ○——○ |

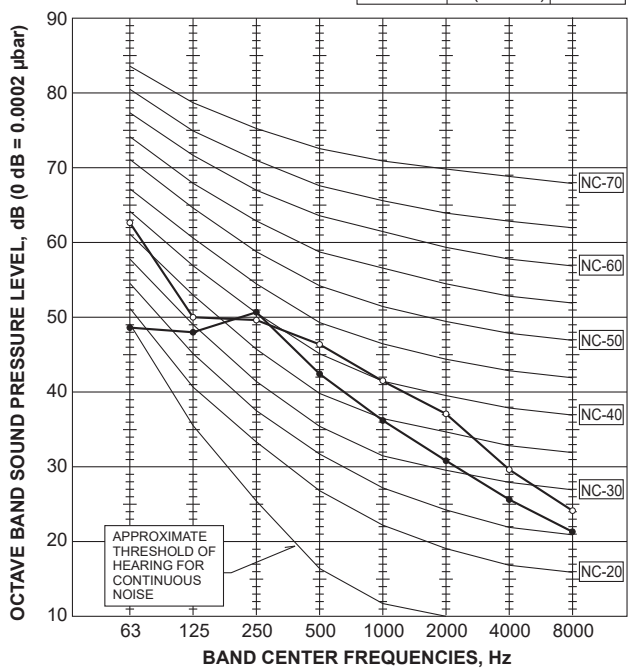


**<Notes>**
**1) Sound data is taken when the system is running stably.**
**2) Relatively large noise could be heard transiently in the case 4-way valve, or LEV operates.**

## ■ PUZ-SHWM140VAA
## PUZ-SHWM140YAA

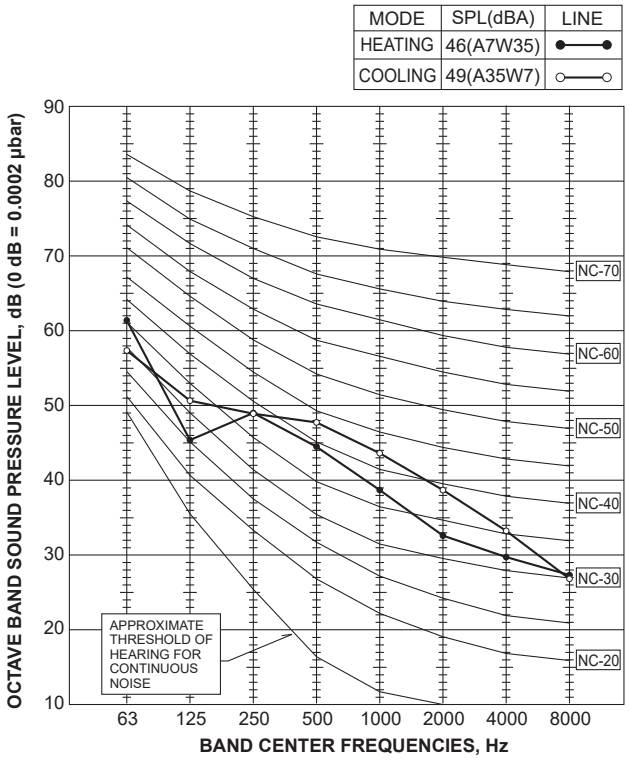


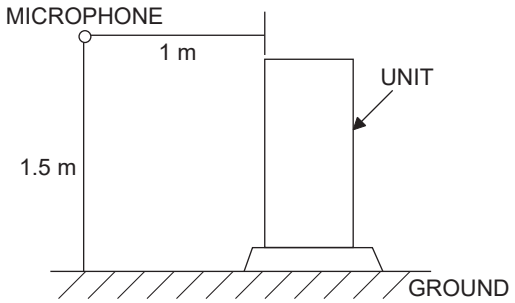

## ■ PUD-SWM60VAA(-BS)
## PUD-SHWM60VAA(-BS)

| MODE | SPL(dBA) | LINE |
|---|---|---|
| HEATING | 41 | ●——● |

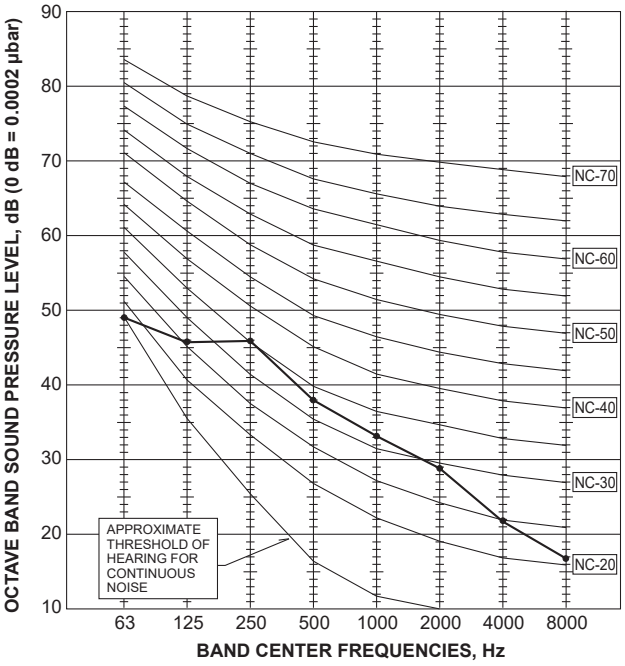


## ■ PUD-SWM80VAA(-BS)
## PUD-SWM80YAA(-BS)
## PUD-SHWM80VAA(-BS)
## PUD-SHWM80YAA(-BS)

| MODE | SPL(dBA) | LINE |
|---|---|---|
| HEATING | 42 | ●——● |

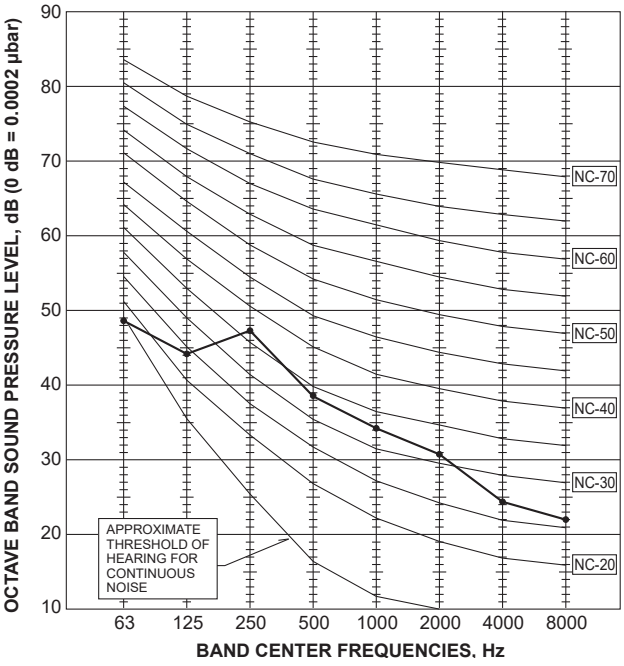


## ■ PUD-SWM100VAA(-BS)
## PUD-SWM100YAA(-BS)
## PUD-SHWM100VAA(-BS)
## PUD-SHWM100YAA(-BS)

| MODE | SPL(dBA) | LINE |
|---|---|---|
| HEATING | 44 | ●——● |

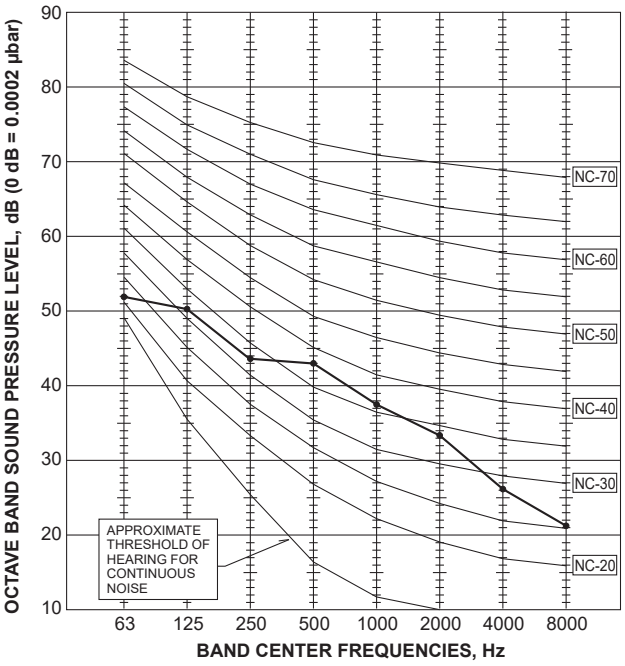


## ■ PUD-SWM120VAA(-BS)
## PUD-SWM120YAA(-BS)
## PUD-SHWM120VAA(-BS)
## PUD-SHWM120YAA(-BS)

| MODE | SPL(dBA) | LINE |
|---|---|---|
| HEATING | 46 | ●——● |

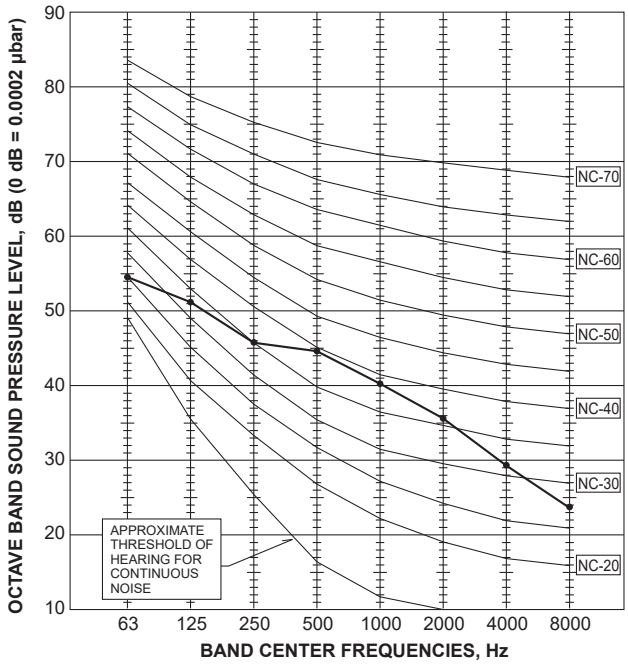


**<Notes>**
**1) Sound data is taken when the system is running stably.**
**2) Relatively large noise could be heard transiently in the case 4-way valve, or LEV operates.**

## ■ PUD-SHWM140VAA(-BS)
## PUD-SHWM140YAA(-BS)

| MODE | SPL(dBA) | LINE |
|---|---|---|
| HEATING | 48 | ●——● |

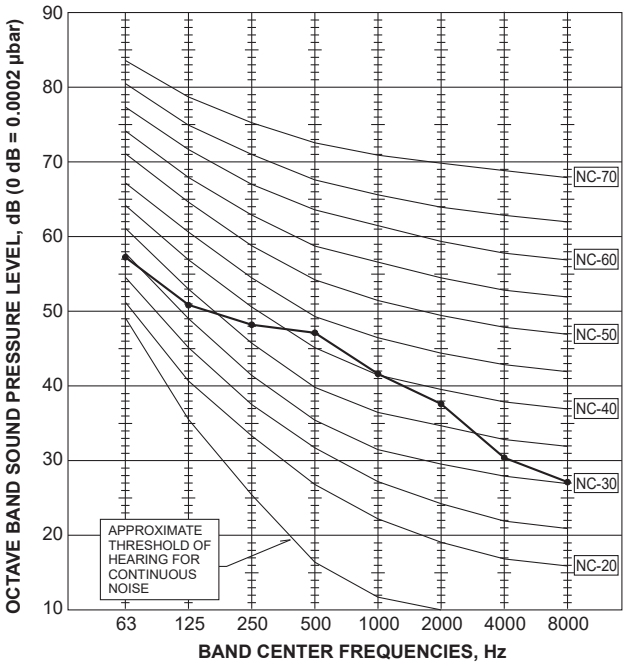


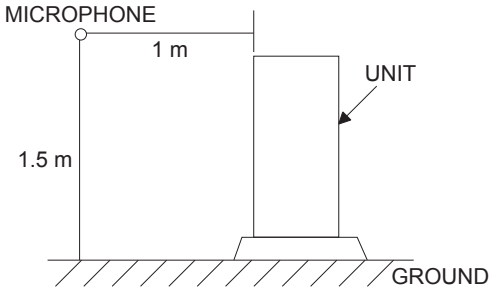


**<Notes>**
**1) Sound data is taken when the system is running stably.**
**2) Relatively large noise could be heard transiently in the case 4-way valve, or LEV operates.**

## ■ PXZ-4F75VG

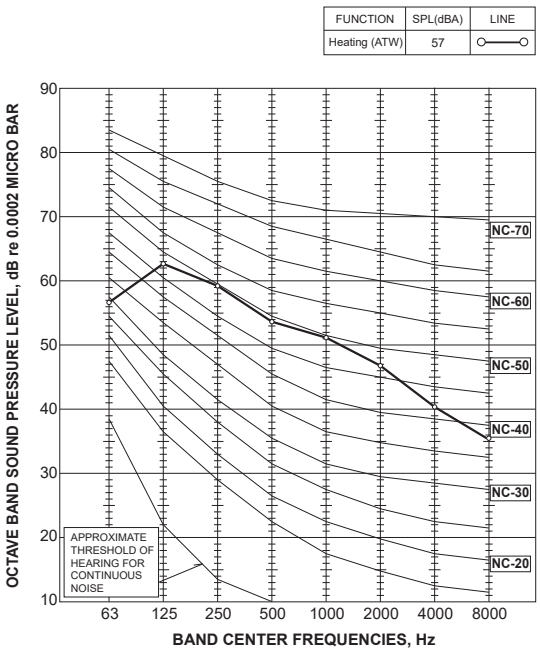


## ■ PXZ-5F85VG

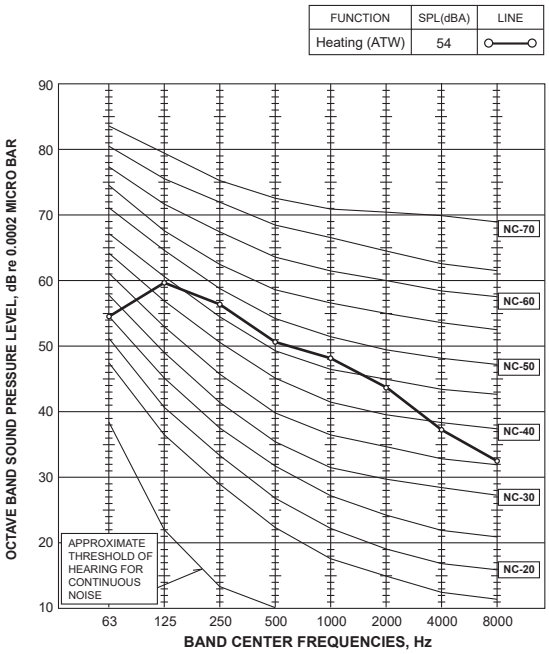


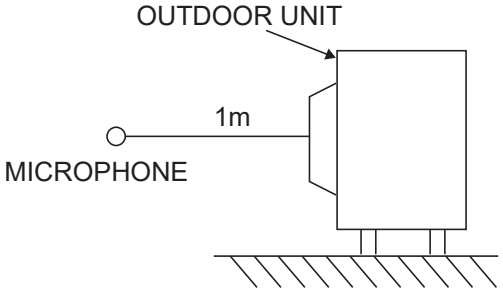


Test conditions

Heating: Dry-bulb temperature •••• 7.0°C Wet-bulb temperature •••• 6.0°C

## Annotation and measurement condition

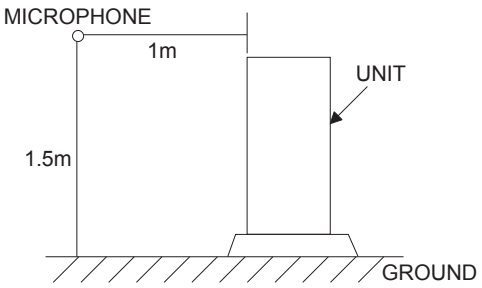


**<Notes>**
**1) Sound data is taken when the system is running stably.**
**2) Relatively large noise could be heard transiently in the case 4-way valve, or LEV operates.**
**3) Sound reflection from ground and surrounding walls is not considered.**

## (1)Packaged-type units

### ■ PUZ-WM50VHA(-BS)

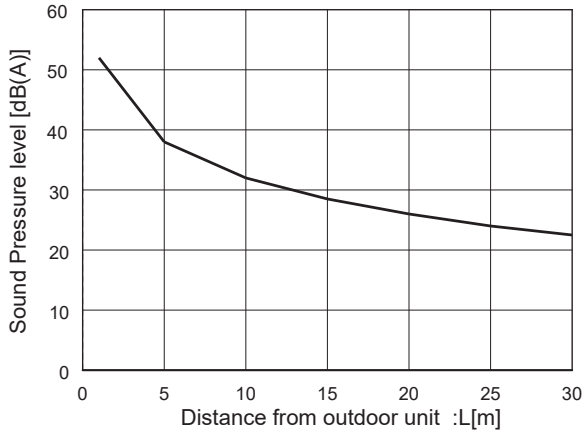


### ■ PUZ-WM60VAA(-BS)
### PUZ-WM85VAA(-BS)
### PUZ-WM85YAA(-BS)

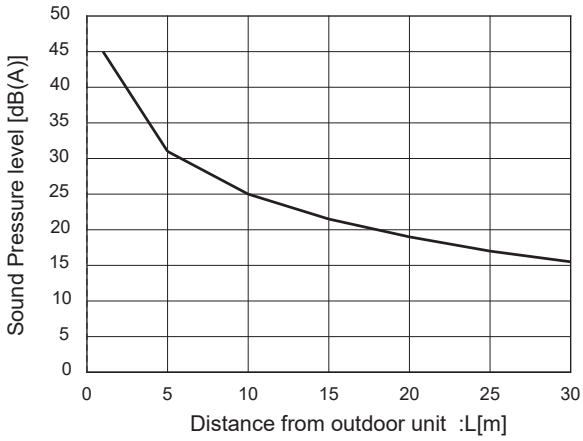


### ■ PUZ-WM112VAA(-BS)
### PUZ-WM112YAA(-BS)

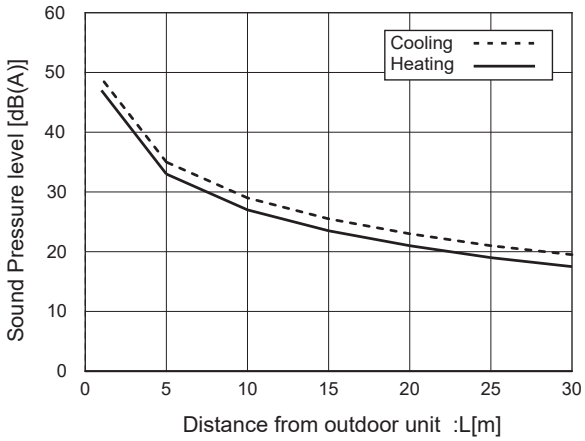


### ■ PUZ-HWM140VHA(-BS)
### PUZ-HWM140YHA(-BS)

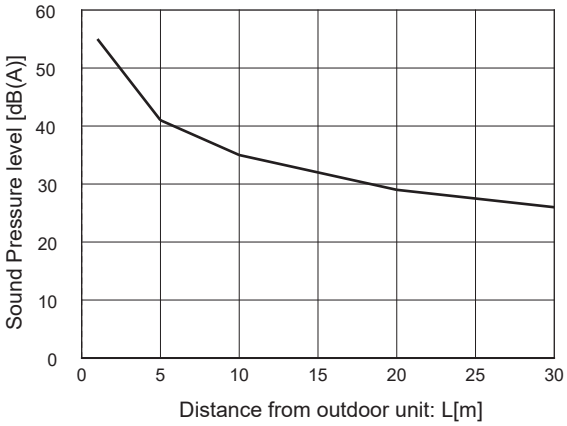

## (2)Split-type units

### ■ SUZ-SWM40VA

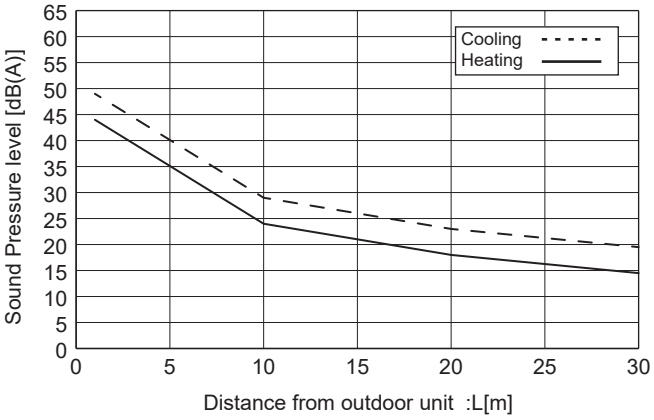


### ■ SUZ-SWM60VA

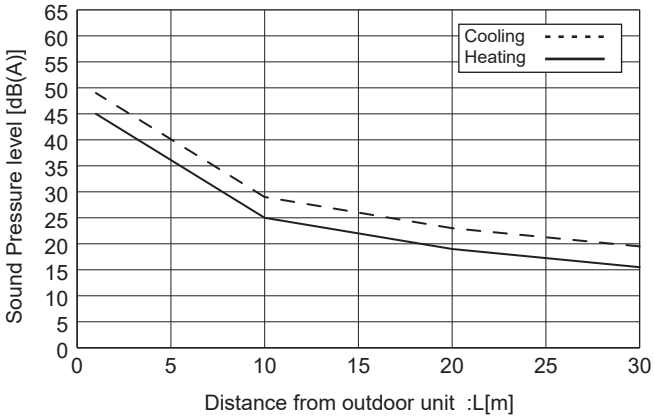


### ■ SUZ-SWM80VA

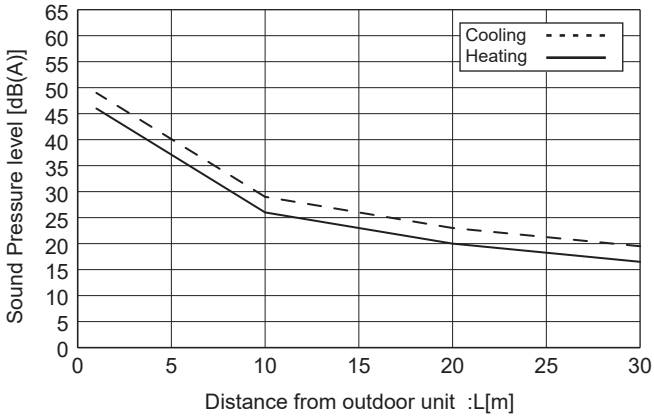


### ■ SUZ-SWM30VA
### SUZ-SHWM30VAH

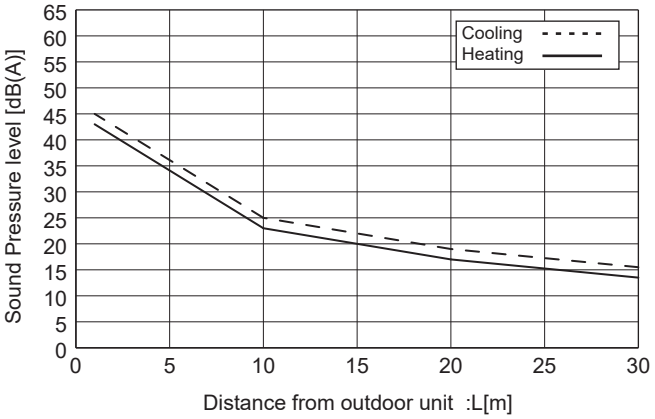


### ■ SUZ-SWM40VA2

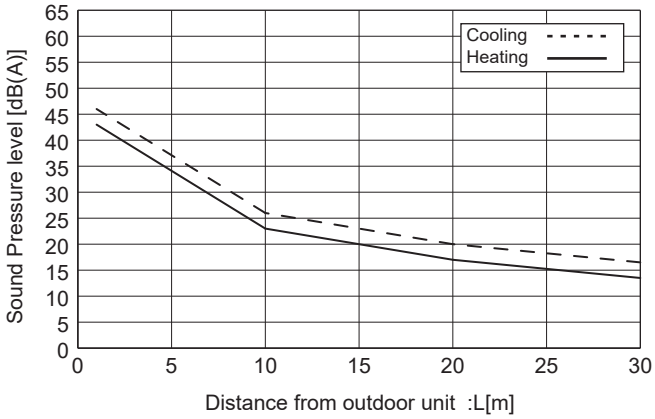


### ■ SUZ-SHWM40VAH

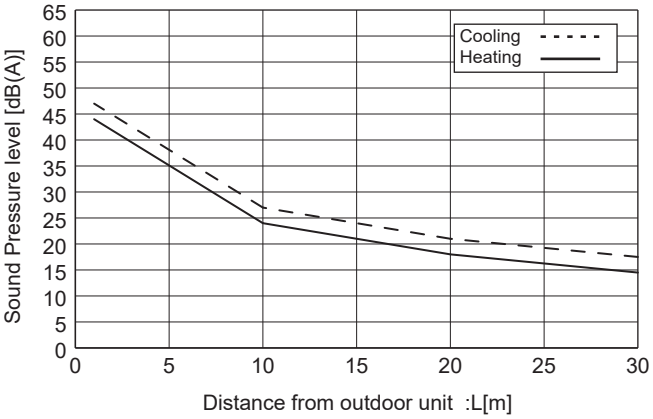

■ **SUZ-SWM60VA2**
**SUZ-SHWM60VAH**

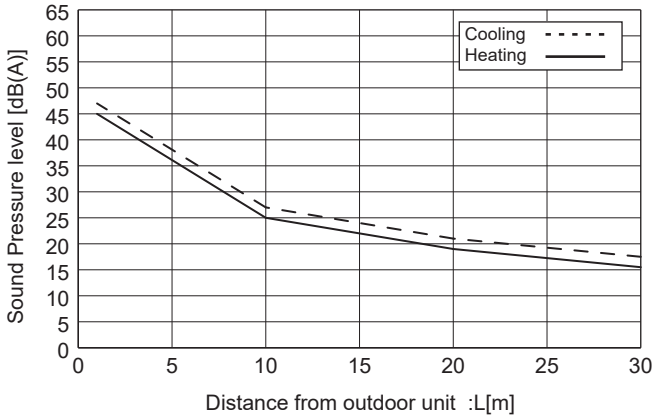


■ **SUZ-SWM80VA2(H)**

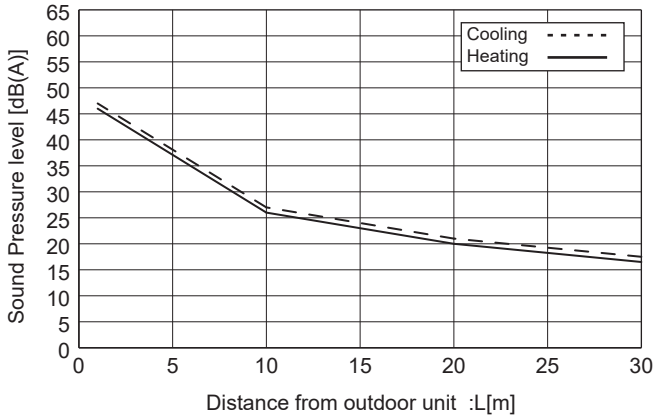


■ **SUZ-SWM100VA(H)**

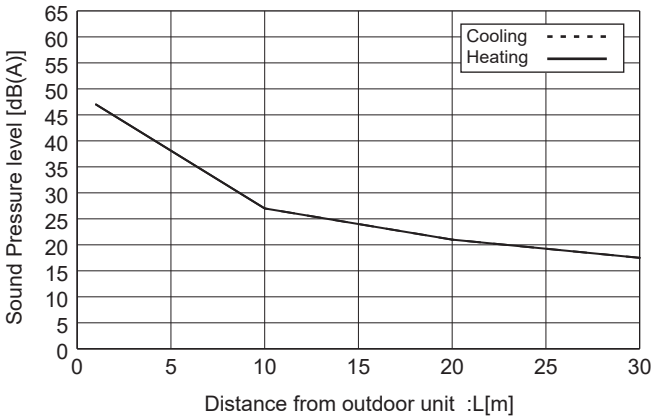

■ **PUZ-SWM60VAA**
**PUZ-SHWM60VAA**

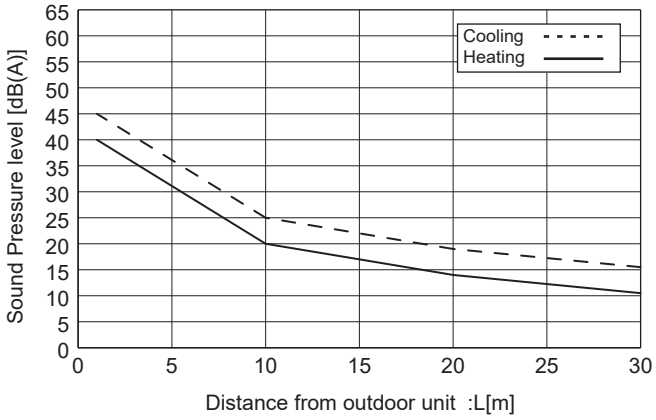


■ **PUZ-SWM80VAA**
**PUZ-SWM80YAA**
**PUZ-SHWM80VAA**
**PUZ-SHWM80YAA**

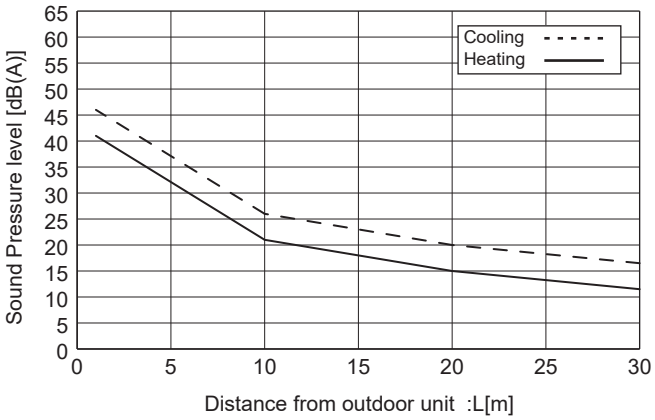


■ **PUZ-SWM100VAA**
**PUZ-SWM100YAA**
**PUZ-SHWM100VAA**
**PUZ-SHWM100YAA**

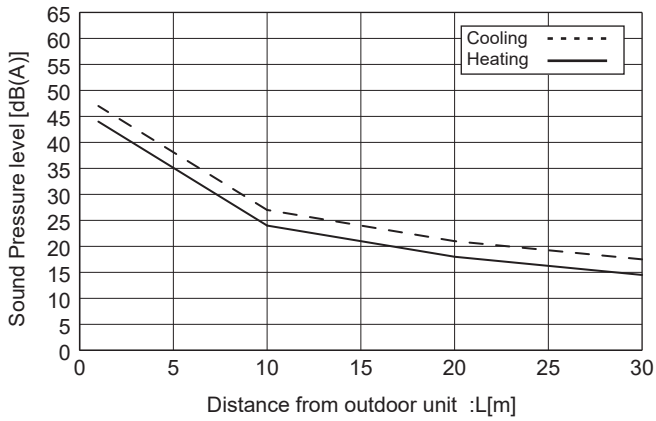


■ **PUZ-SWM120VAA**
**PUZ-SWM120YAA**
**PUZ-SHWM120VAA**
**PUZ-SHWM120YAA**

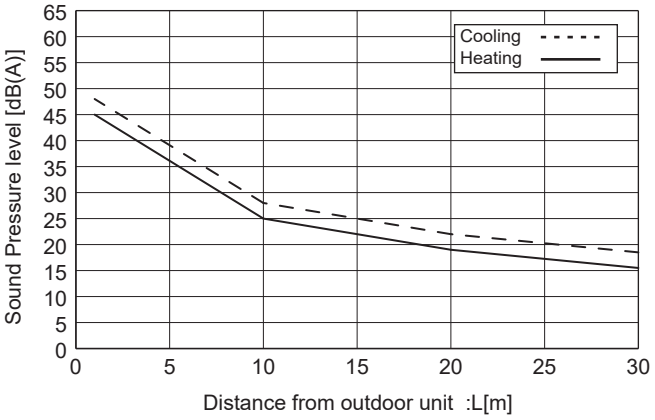


■ **PUZ-SHWM140VAA**
**PUZ-SHWM140YAA**

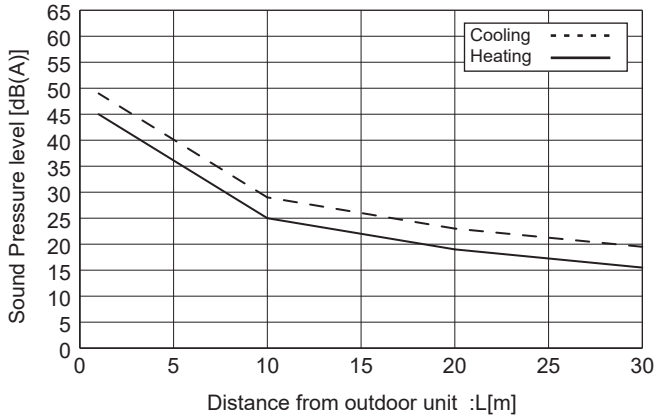

■ **PUD-SWM60VAA(-BS)**
**PUD-SHWM60VAA(-BS)**

■ **PUD-SWM80VAA(-BS)**
**PUD-SWM80YAA(-BS)**
**PUD-SHWM80VAA(-BS)**
**PUD-SHWM80YAA(-BS)**

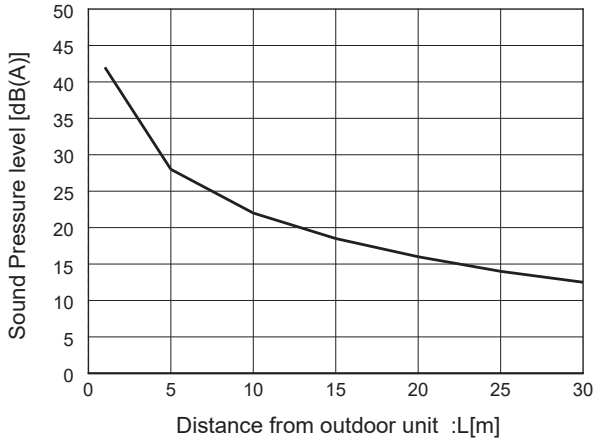


■ **PUD-SWM100VAA(-BS)**
**PUD-SWM100YAA(-BS)**
**PUD-SHWM100VAA(-BS)**
**PUD-SHWM100YAA(-BS)**

■ **PUD-SWM120VAA(-BS)**
**PUD-SWM120YAA(-BS)**
**PUD-SHWM120VAA(-BS)**
**PUD-SHWM120YAA(-BS)**

■ **PUD-SHWM140VAA(-BS)**
**PUD-SHWM140YAA(-BS)**

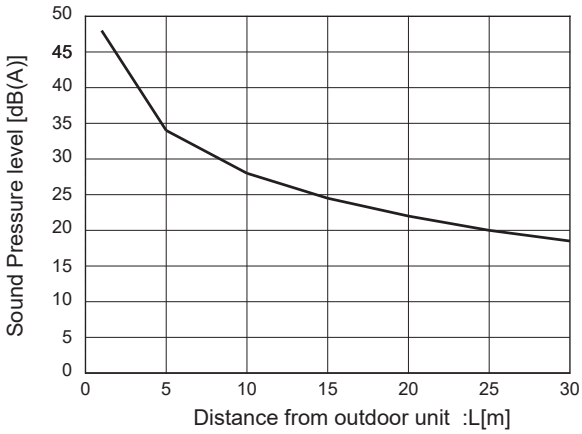

# 7 Estimated noise level based on the distance from Outdoor unit



■ **PXZ-4F75VG**

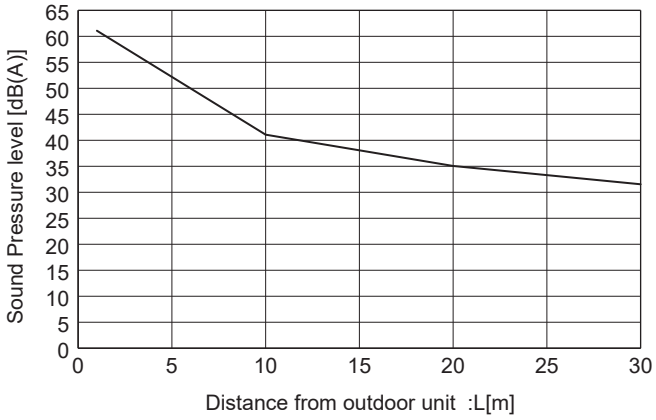


■ **PXZ-5F85VG**

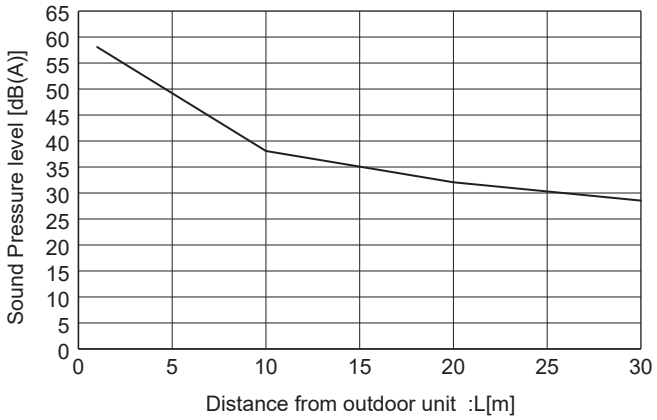

1.Type: Power Inverter Outdoor unit

2.Model name: SUZ-SWM40/60/80VA

3.Specification

(1) Unit mass W= 54 kg

(2) Anchor bolt

1.The total number of bolts. N= 4

2.The size and shape. "=M 10 type

3.The axis section area per one bolt. A= 78 $mm^2$= 7.8E-05 $m^2$

4.The total number of bolts in one side which be pulled stronger when the unit inverted. Nt= 2

(3) The height between the installing surface and the center of gravity of the unit Hg= 365 mm= 0.365 m

(4) The bolt-span from the examination angle L= 360 mm= 0.360 m

(5) The distance between the center of bolt and the center of gravity of the unit Lg= 144 mm(Lg≦L/2)= 0.144 m

4.The examination calculation (by rounding off to the first decimal place of each item)

(1) The horizontal seismic coeffcient for designing Kh= 1.0

(2) The vertical seismic coefficient for designing Kv=Kh/2= 0.5

(3) The horizontal earthquake forces for designing Fh=Kh・W・9.8= 529.2 N

(4) The vertical earthquake forces for designing Fv=Kv・W・9.8= 264.6 N

(5) The withdrawal strength of the anchor bolt $Rb=\frac{Fh\cdot Hg-(W\cdot 9.8-Fv)\cdot Lg}{L\cdot Nt}$ = 215.4 N

(6) The shear forces of the anchor bolt Q=Fh/N= 132.3 N

(7) The stress arising to the anchor bolt

1.The tensile stress. $\sigma$=Rb/A= 2.8 MPa < ft = 176.4 MPa

2.The shearing stress. $\tau$=Q/A= 1.7 MPa < fs = 132.3 MPa

3.The stress when affected by both the shearing and the tensile at the same time. fts=1.4ft-1.6 $\tau$ = 244.2 MPa

$\sigma$= 2.8 MPa < fts= 176.4 MPa

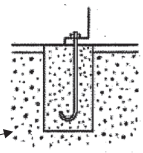

(8) The construction way of the anchor bolt

1.The construction way of the anchor bolt. = Boxed J type anchor

2.The thickness of the concrete. = 120 mm = 0.120 m

3.The length of buried part of bolt. = 70 mm = 0.070 m

4.The permissible withdrawal weight. Ta= 3136 N > Rb= 215.4 N

Since the results from the examination above, the anchor bolt has enough strength

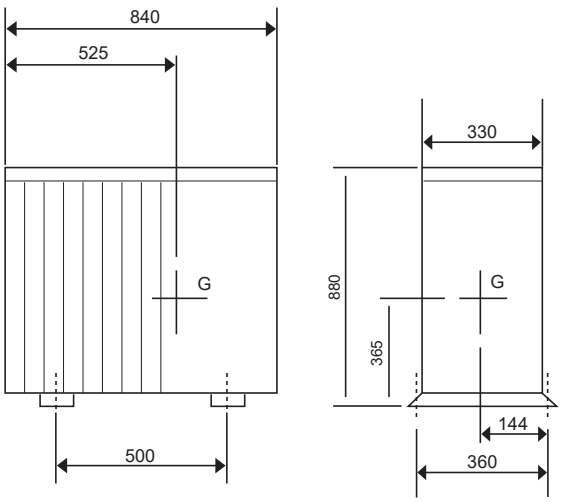

1.Type: Power Inverter Outdoor unit

2.Model name: SUZ-SWM30VA, SUZ-SHWM30VAH, SUZ-SWM40/60VA2(-SC), SUZ-SHWM40VAH(-SC)

3.Specification

| | | | | | | |
|---|---|---|---|---|---|---|
| (1) Unit mass | W= | 40 | kg | | | |
| (2) Anchor bolt | | | | | | |
| 1.The total number of bolts. | N= | 4 | | | | |
| 2.The size and shape. | "=M | 10 | type | | | |
| 3.The axis section area per one bolt. | A= | 78 | $mm^2$= | 7.8E-05 | $m^2$ | |
| 4.The total number of bolts in one side which be pulled stronger when the unit inverted. | Nt= | 2 | | | | |
| (3) The height between the installing surface and the center of gravity of the unit | Hg= | 340 | mm= | 0.34 | m | |
| (4) The bolt-span from the examination angle | L= | 290 | mm= | 0.29 | m | |
| (5) The distance between the center of bolt and the center of gravity of the unit | Lg= | 140 | mm(Lg≦L/2)= | 0.14 | m | |

4.The examination calculation (by rounding off to the first decimal place of each item)

| | | | | |
|---|---|---|---|---|
| (1) The horizontal seismic coeffcient for designing | Kh= | 1.0 | | |
| (2) The vertical seismic coefficient for designing | Kv=Kh/2= | 0.5 | | |
| (3) The horizontal earthquake forces for designing | Fh=Kh·W·9.8= | 392.0 | N | |
| (4) The vertical earthquake forces for designing | Fv=Kv·W·9.8= | 196.0 | N | |
| (5) The withdrawal strength of the anchor bolt $Rb=\frac{Fh \cdot Hg-(W \cdot 9.8-Fv) \cdot Lg}{L \cdot Nt}$ | = | 182.5 | N | |
| (6) The shear forces of the anchor bolt | Q=Fh/N= | 98.0 | N | |
| (7) The stress arising to the anchor bolt | | | | |
| 1.The tensile stress. | $\sigma$=Rb/A= | 2.3 | MPa < ft = 176.4 MPa | |
| 2.The shearing stress. | $\tau$=Q/A= | 1.3 | MPa < fs = 132.3 MPa | |
| 3.The stress when affected by both the shearing and the tensile at the same time. fts=1.4ft-1.6 $\tau$ = | | 244.9 | MPa | |
| $\sigma$= 2.3 MPa | < fts= | 176.4 | MPa | |
| (8) The construction way of the anchor bolt | | | | |
| 1.The construction way of the anchor bolt. | = | Boxed J type anchor | | |
| 2.The thickness of the concrete. | = | 120 | mm = | 0.120 m |
| 3.The length of buried part of bolt. | = | 70 | mm = | 0.070 m |
| 4.The permissible withdrawal weight. | Ta= | 3136 | N > | Rb= 182.5 N |

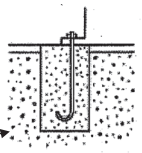

Since the results from the examination above, the anchor bolt has enough strength

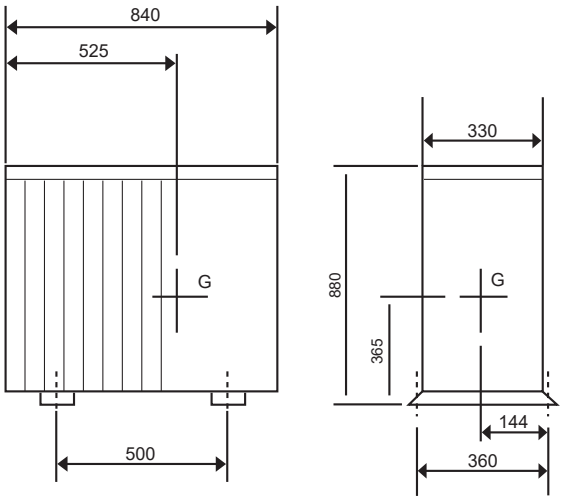

1.Type: Power Inverter Outdoor unit

2.Model name: SUZ-SHWM60VAH, SUZ-SWM80VA(H)2, SUZ-SWM100VA(H)

3.Specification

| | | | | | |
|---|---|---|---|---|---|
| (1) Unit mass | W= | 53.5 | kg | | |
| (2) Anchor bolt | | | | | |
| 1.The total number of bolts. | N= | 4 | | | |
| 2.The size and shape. | "=M | 10 | type | | |
| 3.The axis section area per one bolt. | A= | 78 | $mm^2$= | 7.8E-05 | $m^2$ |
| 4.The total number of bolts in one side which be pulled stronger when the unit inverted. | Nt= | 2 | | | |
| (3) The height between the installing surface and the center of gravity of the unit | Hg= | 390 | mm= | 0.39 | m |
| (4) The bolt-span from the examination angle | L= | 330 | mm= | 0.33 | m |
| (5) The distance between the center of bolt and the center of gravity of the unit | Lg= | 150 | mm(Lg≦L/2)= | 0.15 | m |

4.The examination calculation (by rounding off to the first decimal place of each item)

| | | | | |
|---|---|---|---|---|
| (1) The horizontal seismic coeffcient for designing | Kh= | 1.0 | | |
| (2) The vertical seismic coefficient for designing | Kv=Kh/2= | 0.5 | | |
| (3) The horizontal earthquake forces for designing | Fh=Kh・W・9.8= | 524.3 | N | |
| (4) The vertical earthquake forces for designing | Fv=Kv・W・9.8= | 262.2 | N | |
| (5) The withdrawal strength of the anchor bolt $Rb=\frac{Fh\cdot Hg-(W\cdot 9.8-Fv)\cdot Lg}{L\cdot Nt}$ | = | 250.2 | N | |
| (6) The shear forces of the anchor bolt | Q=Fh/N= | 131.1 | N | |
| (7) The stress arising to the anchor bolt | | | | |
| 1.The tensile stress. | $\sigma$=Rb/A= | 3.2 | MPa < ft = 176.4 MPa | |
| 2.The shearing stress. | $\tau$=Q/A= | 1.7 | MPa < fs = 132.3 MPa | |
| 3.The stress when affected by both the shearing and the tensile at the same time. fts=1.4ft-1.6 $\tau$ = | | 244.3 | MPa | |
| $\sigma$= 3.2 MPa | < fts= | 176.4 | MPa | |
| (8) The construction way of the anchor bolt | | | | |
| 1.The construction way of the anchor bolt. | = | Boxed J type anchor | | |
| 2.The thickness of the concrete. | = | 120 | mm= | 0.120 m |
| 3.The length of buried part of bolt. | = | 70 | mm= | 0.070 m |
| 4.The permissible withdrawal weight. | Ta= | 3136 | N > | Rb= 250.2 N |

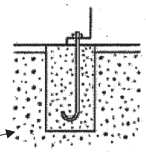

Since the results from the examination above, the anchor bolt has enough strength

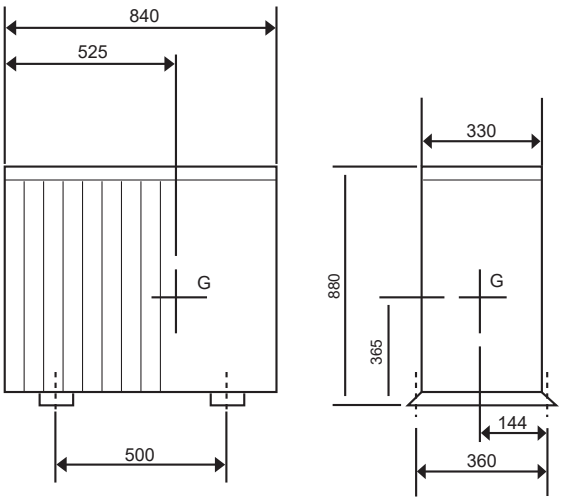

1.Type: Power Inverter Outdoor unit

2.Model name: PUZ-S(H)WM60VAA, PUZ-S(H)WM80VAA, PUZ-S(H)WM100VA, PUZ-S(H)WM120VA

## 3.Specification

| | | | | | |
|---|---|---|---|---|---|
| (1) Unit mass | W= | 113.5 | kg | | |
| (2) Anchor bolt | | | | | |
| 1.The total number of bolts. | N= | 4 | | | |
| 2.The size and shape. | "=M | 10 | type | | |
| 3.The axis section area per one bolt. | A= | 78 | $mm^2$= | 7.8E-05 | $m^2$ |
| 4.The total number of bolts in one side which be pulled stronger when the unit inverted. | Nt= | 2 | | | |
| (3) The height between the installing surface and the center of gravity of the unit | Hg= | 480 | mm= | 0.48 | m |
| (4) The bolt-span from the examination angle | L= | 512.2 | mm= | 0.5122 | m |
| (5) The distance between the center of bolt and the center of gravity of the unit | Lg= | 200 | mm(Lg≦L/2)= | 0.2 | m |

## 4.The examination calculation (by rounding off to the first decimal place of each item)

| | | | | |
|---|---|---|---|---|
| (1) The horizontal seismic coeffcient for designing | Kh= | 1.0 | | |
| (2) The vertical seismic coefficient for designing | Kv=Kh/2= | 0.5 | | |
| (3) The horizontal earthquake forces for designing | Fh=Kh・W・9.8= | 1112.3 | N | |
| (4) The vertical earthquake forces for designing | Fv=Kv・W・9.8= | 556.2 | N | |
| (5) The withdrawal strength of the anchor bolt $Rb=\frac{Fh・Hg-(W・9.8-Fv)・Lg}{L・Nt}$ | = | 412.6 | N | |
| (6) The shear forces of the anchor bolt | Q=Fh/N= | 278.1 | N | |
| (7) The stress arising to the anchor bolt | | | | |
| 1.The tensile stress. | $\sigma$=Rb/A= | 5.3 | MPa < ft = 176.4 MPa | |
| 2.The shearing stress. | $\tau$=Q/A= | 3.6 | MPa< fs = 132.3 MPa | |
| 3.The stress when affected by both the shearing and the tensile at the same time. | fts=1.4ft-1.6 $\tau$ = | 241.3 | MPa | |
| $\sigma$= 5.3 MPa | < fts= | 176.4 | MPa | |
| (8) The construction way of the anchor bolt | | | | |
| 1.The construction way of the anchor bolt. | = | Boxed J type anchor | | |
| 2.The thickness of the concrete. | = | 120 | mm = | 0.120 m |
| 3.The length of buried part of bolt. | = | 70 | mm = | 0.070 m |
| 4.The permissible withdrawal weight. | Ta= | 3136 | N > | Rb= 412.6 N |

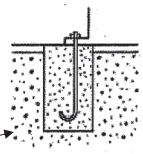

Since the results from the examination above, the anchor bolt has enough strength

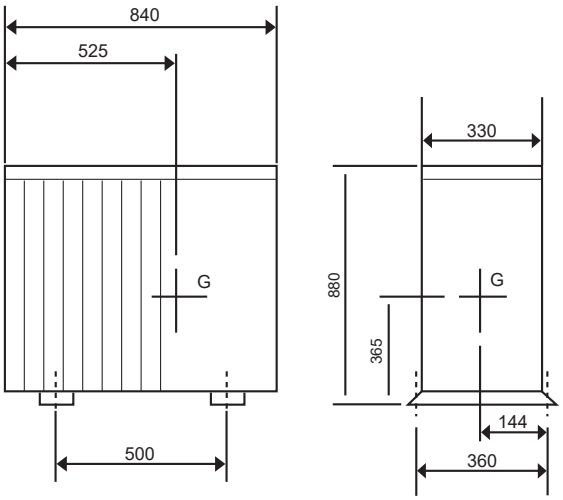

1.Type: Power Inverter Outdoor unit

2.Model name: PUZ-S(H)WM140VAA

3.Specification

| | | | | | |
|---|---|---|---|---|---|
| (1) Unit mass | W= | 114.5 | kg | | |
| (2) Anchor bolt | | | | | |
| 1.The total number of bolts. | N= | 4 | | | |
| 2.The size and shape. | "=M | 10 | type | | |
| 3.The axis section area per one bolt. | A= | 78 | $mm^2$= | 7.8E-05 | $m^2$ |
| 4.The total number of bolts in one side which be pulled stronger when the unit inverted. | Nt= | 2 | | | |
| (3) The height between the installing surface and the center of gravity of the unit | Hg= | 460 | mm= | 0.46 | m |
| (4) The bolt-span from the examination angle | L= | 512.2 | mm= | 0.5122 | m |
| (5) The distance between the center of bolt and the center of gravity of the unit | Lg= | 252.2 | mm(Lg≦L/2)= | 0.260 | m |

4.The examination calculation (by rounding off to the first decimal place of each item)

| | | | | |
|---|---|---|---|---|
| (1) The horizontal seismic coeffcient for designing | Kh= | 1.0 | | |
| (2) The vertical seismic coefficient for designing | Kv=Kh/2= | 0.5 | | |
| (3) The horizontal earthquake forces for designing | Fh=Kh・W・9.8= | 1122.1 | N | |
| (4) The vertical earthquake forces for designing | Fv=Kv・W・9.8= | 561.1 | N | |
| (5) The withdrawal strength of the anchor bolt $Rb=\frac{Fh\cdot Hg-(W\cdot 9.8-Fv)\cdot Lg}{L\cdot Nt}$ | = | 365.7 | N | |
| (6) The shear forces of the anchor bolt | Q=Fh/N= | 280.5 | N | |
| (7) The stress arising to the anchor bolt | | | | |
| 1.The tensile stress. | $\sigma$=Rb/A= | 4.7 | MPa | < ft = 176.4 MPa |
| 2.The shearing stress. | $\tau$ = Q/A= | 3.6 | MPa | < fs = 132.3 MPa |
| 3.The stress when affected by both the shearing and the tensile at the same time. fts=1.4ft-1.6 $\tau$ = | | 241.2 | MPa | |
| $\sigma$ = 4.7 MPa | < fts= | 176.4 | MPa | |
| (8) The construction way of the anchor bolt | | | | |
| 1.The construction way of the anchor bolt. | = | Boxed J type anchor | | |
| 2.The thickness of the concrete. | = | 120 | mm= | 0.120 m |
| 3.The length of buried part of bolt. | = | 70 | mm= | 0.070 m |
| 4.The permissible withdrawal weight. | Ta= | 3136 | N | > Rb= 365.7 N |

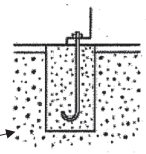

Since the results from the examination above, the anchor bolt has enough strength

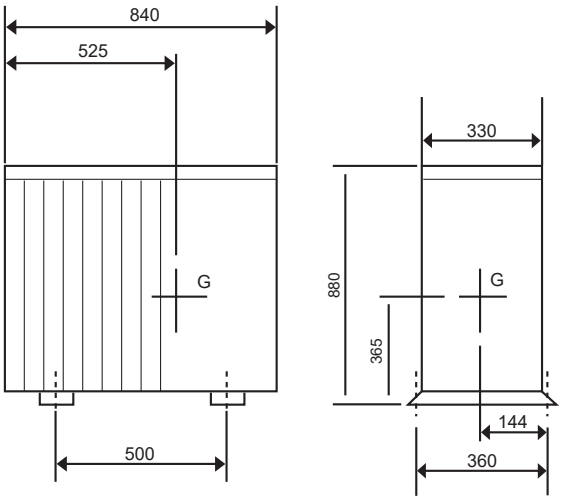

1.Type: Power Inverter Outdoor unit

2.Model name: PUZ-S(H)WM60YAA, PUZ-S(H)WM80YAA, PUZ-S(H)WM100YAA, PUZ-S(H)WM120YAA, PUZ-S(H)WM140YAA

3.Specification

| | | | | | |
|---|---|---|---|---|---|
| (1) Unit mass | W= | 126.0 | kg | | |
| (2) Anchor bolt | | | | | |
| 1.The total number of bolts. | N= | 4 | | | |
| 2.The size and shape. | "=M | 10 | type | | |
| 3.The axis section area per one bolt. | A= | 78 | $mm^2$= | 7.8E-05 | $m^2$ |
| 4.The total number of bolts in one side which be pulled stronger when the unit inverted. | Nt= | 2 | | | |
| (3) The height between the installing surface and the center of gravity of the unit | Hg= | 500 | mm= | 0.5 | m |
| (4) The bolt-span from the examination angle | L= | 512.2 | mm= | 0.5122 | m |
| (5) The distance between the center of bolt and the center of gravity of the unit | Lg= | 232.2 | mm(Lg≦L/2)= | 0.280 | m |

4.The examination calculation (by rounding off to the first decimal place of each item)

| | | | | |
|---|---|---|---|---|
| (1) The horizontal seismic coeffcient for designing | Kh= | 1.0 | | |
| (2) The vertical seismic coefficient for designing | Kv=Kh/2= | 0.5 | | |
| (3) The horizontal earthquake forces for designing | Fh=Kh·W·9.8= | 1234.8 | N | |
| (4) The vertical earthquake forces for designing | Fv=Kv·W·9.8= | 617.4 | N | |
| (5) The withdrawal strength of the anchor bolt $Rb=\frac{Fh \cdot Hg-(W \cdot 9.8-Fv) \cdot Lg}{L \cdot Nt}$ | = | 462.7 | N | |
| (6) The shear forces of the anchor bolt | Q=Fh/N= | 308.7 | N | |
| (7) The stress arising to the anchor bolt | | | | |
| 1.The tensile stress. | $\sigma$=Rb/A= | 5.9 | MPa < ft = 176.4 MPa | |
| 2.The shearing stress. | $\tau$=Q/A= | 4.0 | MPa < fs = 132.3 MPa | |
| 3.The stress when affected by both the shearing and the tensile at the same time. fts=1.4ft-1.6$\tau$= | | 240.6 | MPa | |
| $\sigma$= 5.9 MPa | < fts= | 176.4 | MPa | |
| (8) The construction way of the anchor bolt | | | | |
| 1.The construction way of the anchor bolt. | = | Boxed J type anchor | | |
| 2.The thickness of the concrete. | = | 120 | mm = | 0.120 m |
| 3.The length of buried part of bolt. | = | 70 | mm = | 0.070 m |
| 4.The permissible withdrawal weight. | Ta= | 3136 | N > | Rb= 462.7 N |

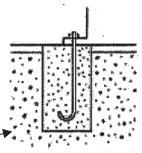

Since the results from the examination above, the anchor bolt has enough strength

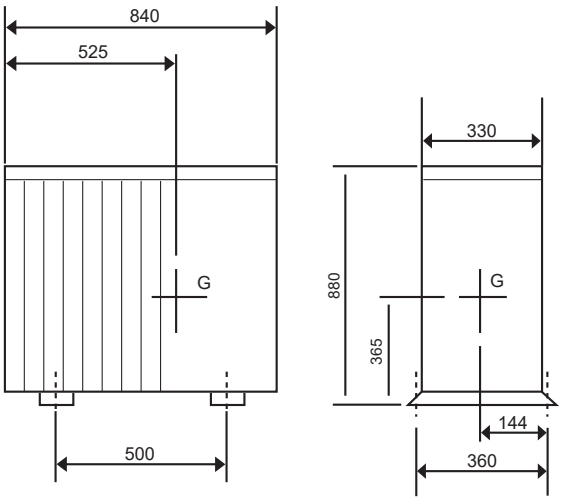

1.Type: Power Inverter Outdoor unit

2.Model name: PUZ-WM50VHA(-BS)

3.Specification

(1) Unit mass W= 71 kg

(2) Anchor bolt

1.The total number of bolts. N= 4

2.The size and shape. "=M 10 type

3.The axis section area per one bolt. A= 78 $mm^2$= $78 \times 10^{-6}$ $m^2$

4.The total number of bolts in one side which be pulled stronger when the unit inverted. Nt= 2

(3) The height between the installing surface and the center of gravity of the unit Hg= 430 mm= 0.430 m

(4) The bolt-span from the examination angle L= 370 mm= 0.370 m

(5) The distance between the center of bolt and the center of gravity of the unit Lg= 180 mm(Lg≦L/2)= 0.180 m

4.The examination calculation (by rounding off to the first decimal place of each item)

(1) The horizontal seismic coeffcient for designing Kh= 1.0

(2) The vertical seismic coefficient for designing Kv=Kh/2= 0.5

(3) The horizontal earthquake forces for designing Fh=Kh･W･9.8= 695.8 N

(4) The vertical earthquake forces for designing Fv=Kv･W･9.8= 347.9 N

(5) The withdrawal strength of the anchor bolt $Rb=\frac{Fh \cdot Hg-(W \cdot 9.8-Fv) \cdot Lg}{L \cdot Nt}$ = 319.7 N

(6) The shear forces of the anchor bolt Q=Fh/N= 174.0 N

(7) The stress arising to the anchor bolt

1.The tensile stress. $\sigma$=Rb/A= 4.1 MPa < ft = 176.4 MPa

2.The shearing stress. $\tau$=Q/A= 2.2 MPa < fs = 132.3 MPa

3.The stress when affected by both the shearing and the tensile at the same time. fts=1.4ft-1.6 $\tau$ = 243.4 MPa

$\sigma$= 4.1 MPa < fts= 243.4 MPa

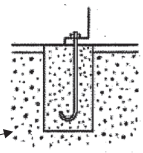

(8) The construction way of the anchor bolt

1.The construction way of the anchor bolt. = Boxed J type anchor

2.The thickness of the concrete. = 120 mm = 0.120 m

3.The length of buried part of bolt. = 70 mm = 0.070 m

4.The permissible withdrawal weight. Ta= 3136 N > Rb= 320 N

Since the results from the examination above, the anchor bolt has enough strength

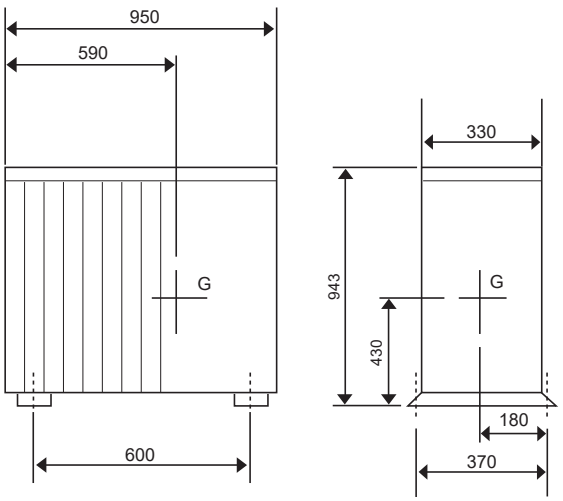

1.Type: Power Inverter Outdoor unit

2.Model name: PUZ-WM60VAA(-BS), PUZ-WM85VAA(-BS)

## 3.Specification

| | | | | |
|---|---|---|---|---|
| (1) Unit mass | W= | 98 | kg | |
| (2) Anchor bolt | | | | |
| 1.The total number of bolts. | N= | 4 | | |
| 2.The size and shape. | "=M | 10 | type | |
| 3.The axis section area per one bolt. | A= | 78 | $mm^2$= | $78 \times 10^{-6}$ $m^2$ |
| 4.The total number of bolts in one side which be pulled stronger when the unit inverted. | Nt= | 2 | | |
| (3) The height between the installing surface and the center of gravity of the unit | Hg= | 450 | mm= | 0.450 m |
| (4) The bolt-span from the examination angle | L= | 520 | mm= | 0.520 m |
| (5) The distance between the center of bolt and the center of gravity of the unit | Lg= | 225 | mm(Lg≦L/2)= | 0.225 m |

## 4.The examination calculation (by rounding off to the first decimal place of each item)

| | | | | |
|---|---|---|---|---|
| (1) The horizontal seismic coeffcient for designing | Kh= | 1.0 | | |
| (2) The vertical seismic coefficient for designing | Kv=Kh/2= | 0.5 | | |
| (3) The horizontal earthquake forces for designing | Fh=Kh·W·9.8= | 960.4 | N | |
| (4) The vertical earthquake forces for designing | Fv=Kv·W·9.8= | 480.2 | N | |
| (5) The withdrawal strength of the anchor bolt $Rb=\frac{Fh \cdot Hg-(W \cdot 9.8-Fv) \cdot Lg}{L \cdot Nt}$ | = | 311.7 | N | |
| (6) The shear forces of the anchor bolt | Q=Fh/N= | 240.1 | N | |
| (7) The stress arising to the anchor bolt | | | | |
| 1.The tensile stress. | $\sigma$=Rb/A= | 4.0 | MPa < ft = 176.4 MPa | |
| 2.The shearing stress. | $\tau$=Q/A= | 3.1 | MPa < fs = 132.3 MPa | |
| 3.The stress when affected by both the shearing and the tensile at the same time. fts=1.4ft-1.6 $\tau$ = | | 242.0 | MPa | |
| $\sigma$= 4.0 MPa | < fts= | 242.0 | MPa | |
| (8) The construction way of the anchor bolt | | | | |
| 1.The construction way of the anchor bolt. | = | Boxed J type anchor | | |
| 2.The thickness of the concrete. | = | 120 | mm = | 0.120 m |
| 3.The length of buried part of bolt. | = | 70 | mm = | 0.070 m |
| 4.The permissible withdrawal weight. | Ta= | 3136 | N > | Rb= 312 N |

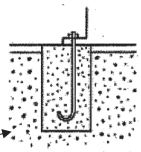

Since the results from the examination above, the anchor bolt has enough strength

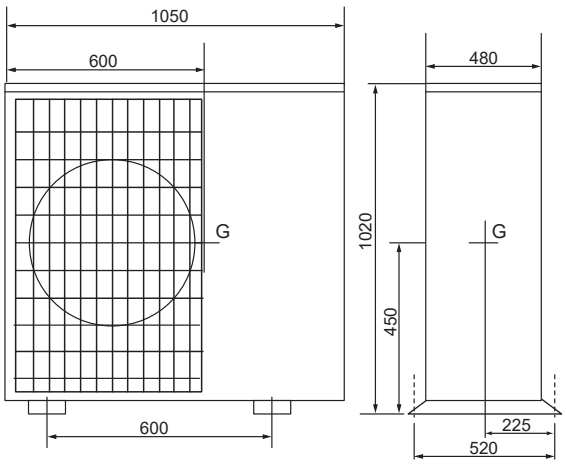

1.Type: Power Inverter Outdoor unit

2.Model name: PUZ-WM85YAA(-BS)

3.Specification

(1) Unit mass W= 111 kg

(2) Anchor bolt

1.The total number of bolts. N= 4

2.The size and shape. "=M 10 type

3.The axis section area per one bolt. A= 78 $mm^2$= $78 \times 10^{-6}$ $m^2$

4.The total number of bolts in one side which be pulled stronger when the unit inverted. Nt= 2

(3) The height between the installing surface and the center of gravity of the unit Hg= 450 mm= 0.450 m

(4) The bolt-span from the examination angle L= 520 mm= 0.520 m

(5) The distance between the center of bolt and the center of gravity of the unit Lg= 225 mm(Lg≦L/2)= 0.225 m

4.The examination calculation (by rounding off to the first decimal place of each item)

(1) The horizontal seismic coeffcient for designing Kh= 1.0

(2) The vertical seismic coefficient for designing Kv=Kh/2= 0.5

(3) The horizontal earthquake forces for designing Fh=Kh･W･9.8= 1087.8 N

(4) The vertical earthquake forces for designing Fv=Kv･W･9.8= 543.9 N

(5) The withdrawal strength of the anchor bolt $Rb=\frac{Fh \cdot Hg-(W \cdot 9.8-Fv) \cdot Lg}{L \cdot Nt}$ = 353.0 N

(6) The shear forces of the anchor bolt Q=Fh/N= 272.0 N

(7) The stress arising to the anchor bolt

1.The tensile stress. $\sigma$=Rb/A= 4.5 MPa < ft = 176.4 MPa

2.The shearing stress. $\tau$=Q/A= 3.5 MPa < fs = 132.3 MPa

3.The stress when affected by both the shearing and the tensile at the same time. fts=1.4ft-1.6 $\tau$ = 241.4 MPa

$\sigma$= 4.5 MPa < fts= 241.4 MPa

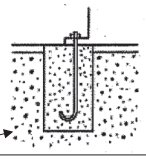

(8) The construction way of the anchor bolt

1.The construction way of the anchor bolt. = Boxed J type anchor

2.The thickness of the concrete. = 120 mm = 0.120 m

3.The length of buried part of bolt. = 70 mm = 0.070 m

4.The permissible withdrawal weight. Ta= 3136 N > Rb= 353 N

Since the results from the examination above, the anchor bolt has enough strength

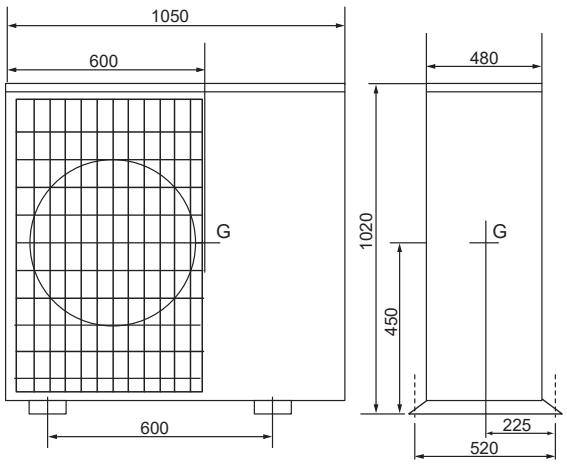

1.Type: Power Inverter Outdoor unit

2.Model name: PUZ-WM112VAA(-BS)

## 3.Specification

| | | | | |
|---|---|---|---|---|
| (1) Unit mass | W= | 119 | kg | |
| (2) Anchor bolt | | | | |
| 1.The total number of bolts. | N= | 4 | | |
| 2.The size and shape. | "=M | 10 | type | |
| 3.The axis section area per one bolt. | A= | 78 | $mm^2$= | $78 \times 10^{-6}$ $m^2$ |
| 4.The total number of bolts in one side which be pulled stronger when the unit inverted. | Nt= | 2 | | |
| (3) The height between the installing surface and the center of gravity of the unit | Hg= | 450 | mm= | 0.450 m |
| (4) The bolt-span from the examination angle | L= | 520 | mm= | 0.520 m |
| (5) The distance between the center of bolt and the center of gravity of the unit | Lg= | 225 | mm(Lg≦L/2)= | 0.225 m |

## 4.The examination calculation (by rounding off to the first decimal place of each item)

| | | | | |
|---|---|---|---|---|
| (1) The horizontal seismic coeffcient for designing | Kh= | 1.0 | | |
| (2) The vertical seismic coefficient for designing | Kv=Kh/2= | 0.5 | | |
| (3) The horizontal earthquake forces for designing | Fh=Kh·W·9.8= | 1166.2 | N | |
| (4) The vertical earthquake forces for designing | Fv=Kv·W·9.8= | 583.1 | N | |
| (5) The withdrawal strength of the anchor bolt $Rb=\frac{Fh \cdot Hg-(W \cdot 9.8-Fv) \cdot Lg}{L \cdot Nt}$ | = | 378.5 | N | |
| (6) The shear forces of the anchor bolt | Q=Fh/N= | 291.6 | N | |
| (7) The stress arising to the anchor bolt | | | | |
| 1.The tensile stress. | $\sigma$=Rb/A= | 4.9 | MPa < ft = 176.4 MPa | |
| 2.The shearing stress. | $\tau$=Q/A= | 3.7 | MPa < fs = 132.3 MPa | |
| 3.The stress when affected by both the shearing and the tensile at the same time. fts=1.4ft-1.6 $\tau$ = | | 241.0 | MPa | |
| $\sigma$= 4.9 MPa | < fts= | 241.0 | MPa | |
| (8) The construction way of the anchor bolt | | | | |
| 1.The construction way of the anchor bolt. | = | Boxed J type anchor | | |
| 2.The thickness of the concrete. | = | 120 | mm = | 0.120 m |
| 3.The length of buried part of bolt. | = | 70 | mm = | 0.070 m |
| 4.The permissible withdrawal weight. | Ta= | 3136 | N > | Rb= 378 N |

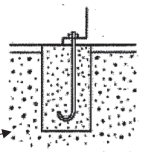

Since the results from the examination above, the anchor bolt has enough strength

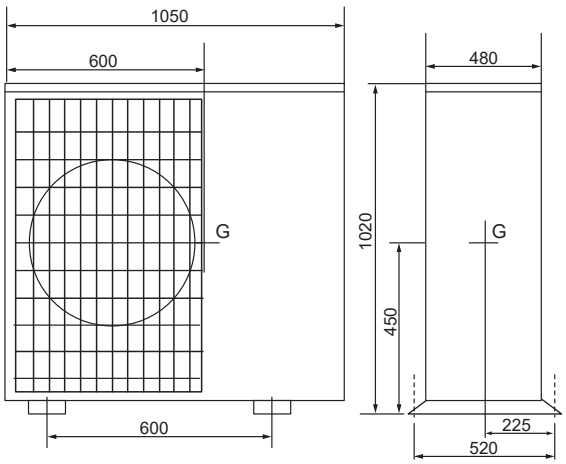

1.Type: Power Inverter Outdoor unit

2.Model name: PUZ-WM112YAA(-BS)

3.Specification

(1) Unit mass W= 132 kg

(2) Anchor bolt

1.The total number of bolts. N= 4

2.The size and shape. "=M 10 type

3.The axis section area per one bolt. A= 78 $mm^2$= $78 \times 10^{-6}$ $m^2$

4.The total number of bolts in one side which be pulled stronger when the unit inverted. Nt= 2

(3) The height between the installing surface and the center of gravity of the unit Hg= 450 mm= 0.450 m

(4) The bolt-span from the examination angle L= 520 mm= 0.520 m

(5) The distance between the center of bolt and the center of gravity of the unit Lg= 225 mm(Lg≦L/2)= 0.225 m

4.The examination calculation (by rounding off to the first decimal place of each item)

(1) The horizontal seismic coeffcient for designing Kh= 1.0

(2) The vertical seismic coefficient for designing Kv=Kh/2= 0.5

(3) The horizontal earthquake forces for designing Fh=Kh･W･9.8= 1293.6 N

(4) The vertical earthquake forces for designing Fv=Kv･W･9.8= 646.8 N

(5) The withdrawal strength of the anchor bolt $Rb=\frac{Fh \cdot Hg-(W \cdot 9.8-Fv) \cdot Lg}{L \cdot Nt}$ = 419.8 N

(6) The shear forces of the anchor bolt Q=Fh/N= 323.4 N

(7) The stress arising to the anchor bolt

1.The tensile stress. $\sigma$=Rb/A= 5.4 MPa < ft = 176.4 MPa

2.The shearing stress. $\tau$=Q/A= 4.1 MPa < fs = 132.3 MPa

3.The stress when affected by both the shearing and the tensile at the same time. fts=1.4ft-1.6 $\tau$ = 240.4 MPa

$\sigma$= 5.4 MPa < fts= 240.4 MPa

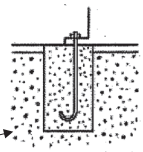

(8) The construction way of the anchor bolt

1.The construction way of the anchor bolt. = Boxed J type anchor

2.The thickness of the concrete. = 120 mm = 0.120 m

3.The length of buried part of bolt. = 70 mm = 0.070 m

4.The permissible withdrawal weight. Ta= 3136 N > Rb= 420 N

Since the results from the examination above, the anchor bolt has enough strength

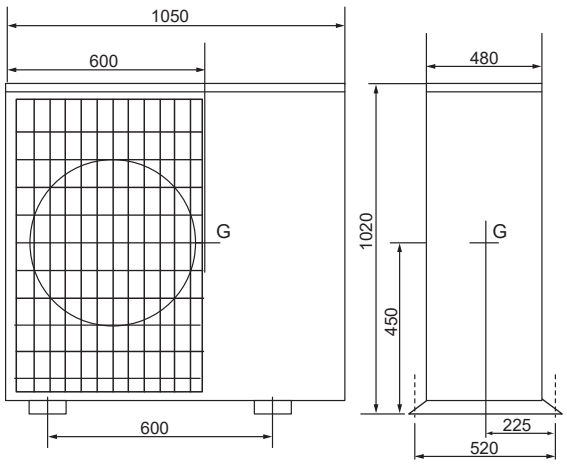

1.Type: Power Inverter Outdoor unit

2.Model name: PUZ-HWM140VHA(-BS)

3.Specification

(1) Unit mass W= 132 kg

(2) Anchor bolt

1.The total number of bolts. N= 4

2.The size and shape. "=M 10 type

3.The axis section area per one bolt. A= 78 $mm^2$= $78 \times 10^{-6}$ $m^2$

4.The total number of bolts in one side which be pulled stronger when the unit inverted. Nt= 2

(3) The height between the installing surface and the center of gravity of the unit Hg= 490 mm= 0.49 m

(4) The bolt-span from the examination angle L= 370 mm= 0.37 m

(5) The distance between the center of bolt and the center of gravity of the unit Lg= 175 mm(Lg≦L/2)= 0.175 m

4.The examination calculation (by rounding off to the first decimal place of each item)

(1) The horizontal seismic coeffcient for designing Kh= 1.0

(2) The vertical seismic coefficient for designing Kv=Kh/2= 0.5

(3) The horizontal earthquake forces for designing Fh=Kh·W·9.8= 1293.6 N

(4) The vertical earthquake forces for designing Fv=Kv·W·9.8= 646.8 N

(5) The withdrawal strength of the anchor bolt $Rb=\frac{Fh \cdot Hg-(W \cdot 9.8-Fv) \cdot Lg}{L \cdot Nt}$ = 703.6 N

(6) The shear forces of the anchor bolt Q=Fh/N= 323.4 N

(7) The stress arising to the anchor bolt

1.The tensile stress. $\sigma$=Rb/A= 9.0 MPa < ft = 176.4 MPa

2.The shearing stress. $\tau$=Q/A= 4.1 MPa < fs = 132.3 MPa

3.The stress when affected by both the shearing and the tensile at the same time. fts=1.4ft-1.6 $\tau$ = 240.3 MPa

$\sigma$= 9.0 MPa < fts= 176.4 MPa

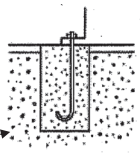

(8) The construction way of the anchor bolt

1.The construction way of the anchor bolt. = Boxed J type anchor

2.The thickness of the concrete. = 120 mm = 0.120 m

3.The length of buried part of bolt. = 70 mm = 0.070 m

4.The permissible withdrawal weight. Ta= 3136 N > Rb= 703.6 N

Since the results from the examination above, the anchor bolt has enough strength

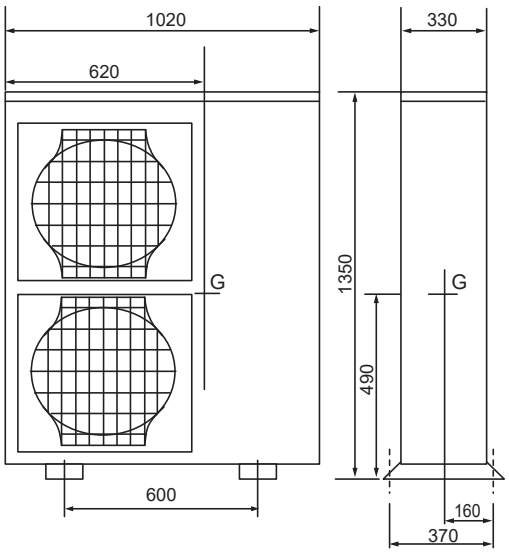

1.Type: Power Inverter Outdoor unit

2.Model name: PUZ-HWM140YHA(-BS)

3.Specification

(1) Unit mass W= 143 kg

(2) Anchor bolt

1.The total number of bolts. N= 4

2.The size and shape. "=M 10 type

3.The axis section area per one bolt. A= 78 $mm^2$= $78 \times 10^{-6}$ $m^2$

4.The total number of bolts in one side which be pulled stronger when the unit inverted. Nt= 2

(3) The height between the installing surface and the center of gravity of the unit Hg= 550 mm= 0.55 m

(4) The bolt-span from the examination angle L= 370 mm= 0.37 m

(5) The distance between the center of bolt and the center of gravity of the unit Lg= 175 mm(Lg≦L/2)= 0.175 m

4.The examination calculation (by rounding off to the first decimal place of each item)

(1) The horizontal seismic coeffcient for designing Kh= 1.0

(2) The vertical seismic coefficient for designing Kv=Kh/2= 0.5

(3) The horizontal earthquake forces for designing Fh=Kh･W･9.8= 1401.4 N

(4) The vertical earthquake forces for designing Fv=Kv･W･9.8= 700.7 N

(5) The withdrawal strength of the anchor bolt $Rb=\frac{Fh \cdot Hg-(W \cdot 9.8-Fv) \cdot Lg}{L \cdot Nt}$ = 875.9 N

(6) The shear forces of the anchor bolt Q=Fh/N= 350.4 N

(7) The stress arising to the anchor bolt

1.The tensile stress. $\sigma$=Rb/A= 11.2 MPa < ft = 176.4 MPa

2.The shearing stress. $\tau$=Q/A= 4.5 MPa < fs = 132.3 MPa

3.The stress when affected by both the shearing and the tensile at the same time. fts=1.4ft-1.6 $\tau$ = 239.8 MPa

$\sigma$= 11.2 MPa < fts= 176.4 MPa

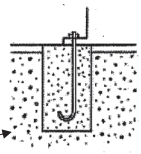

(8) The construction way of the anchor bolt

1.The construction way of the anchor bolt. = Boxed J type anchor

2.The thickness of the concrete. = 120 mm= 0.120 m

3.The length of buried part of bolt. = 70 mm= 0.070 m

4.The permissible withdrawal weight. Ta= 3136 N > Rb= 875.9 N

Since the results from the examination above, the anchor bolt has enough strength

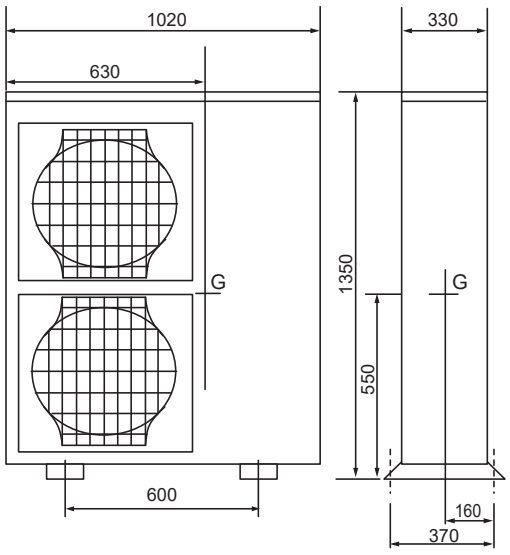

1.Type: Power Inverter Outdoor unit

2.Model name: PUD-SWM60VAA(-BS), PUD-SWM80VAA(-BS)

3.Specification

| | | | | |
|---|---|---|---|---|
| (1) Unit mass | W= | 101 | kg | |
| (2) Anchor bolt | | | | |
| 1.The total number of bolts. | N= | 4 | | |
| 2.The size and shape. | "=M | 10 | type | |
| 3.The axis section area per one bolt. | A= | 78 | $mm^2$= | $78 \times 10^{-6}$ $m^2$ |
| 4.The total number of bolts in one side which be pulled stronger when the unit inverted. | Nt= | 2 | | |
| (3) The height between the installing surface and the center of gravity of the unit | Hg= | 450 | mm= | 0.450 m |
| (4) The bolt-span from the examination angle | L= | 520 | mm= | 0.520 m |
| (5) The distance between the center of bolt and the center of gravity of the unit | Lg= | 225 | mm(Lg≦L/2)= | 0.225 m |

4.The examination calculation (by rounding off to the first decimal place of each item)

| | | | | |
|---|---|---|---|---|
| (1) The horizontal seismic coeffcient for designing | Kh= | 1.0 | | |
| (2) The vertical seismic coefficient for designing | Kv=Kh/2= | 0.5 | | |
| (3) The horizontal earthquake forces for designing | Fh=Kh·W·9.8= | 989.8 | N | |
| (4) The vertical earthquake forces for designing | Fv=Kv·W·9.8= | 494.9 | N | |
| (5) The withdrawal strength of the anchor bolt $Rb=\frac{Fh \cdot Hg-(W \cdot 9.8-Fv) \cdot Lg}{L \cdot Nt}$ | = | 321.2 | N | |
| (6) The shear forces of the anchor bolt | Q=Fh/N= | 247.5 | N | |
| (7) The stress arising to the anchor bolt | | | | |
| 1.The tensile stress. | $\sigma$=Rb/A= | 4.1 | MPa < ft = 176.4 MPa | |
| 2.The shearing stress. | $\tau$=Q/A= | 3.2 | MPa < fs = 132.3 MPa | |
| 3.The stress when affected by both the shearing and the tensile at the same time. fts=1.4ft-1.6 $\tau$ = | | 241.8 | MPa | |
| $\sigma$= 4.1 MPa | < fts= | 241.8 | MPa | |
| (8) The construction way of the anchor bolt | | | | |
| 1.The construction way of the anchor bolt. | = | Boxed J type anchor | | |
| 2.The thickness of the concrete. | = | 120 | mm = | 0.120 m |
| 3.The length of buried part of bolt. | = | 70 | mm = | 0.070 m |
| 4.The permissible withdrawal weight. | Ta= | 3136 | N > | Rb= 321 N |

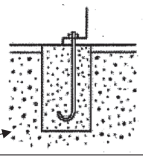

Since the results from the examination above, the anchor bolt has enough strength

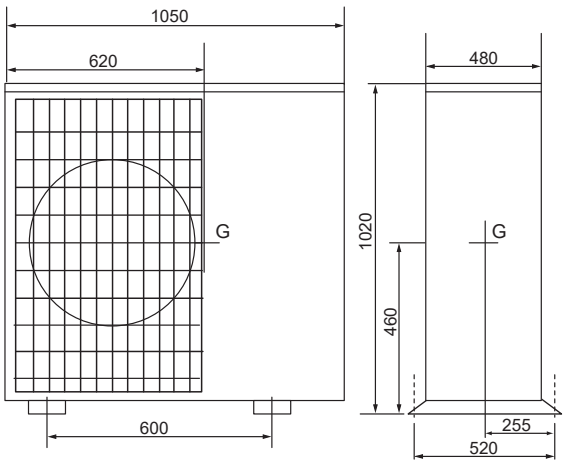

1.Type: Power Inverter Outdoor unit

2.Model name: PUD-SHWM60VAA(-BS), PUD-SHWM80VAA(-BS)

3.Specification

| | | | | |
|---|---|---|---|---|
| (1) Unit mass | W= | 102 | kg | |
| (2) Anchor bolt | | | | |
| 1.The total number of bolts. | N= | 4 | | |
| 2.The size and shape. | "=M | 10 | type | |
| 3.The axis section area per one bolt. | A= | 78 | $mm^2$= | $78 \times 10^{-6}$ $m^2$ |
| 4.The total number of bolts in one side which be pulled stronger when the unit inverted. | Nt= | 2 | | |
| (3) The height between the installing surface and the center of gravity of the unit | Hg= | 450 | mm= | 0.450 m |
| (4) The bolt-span from the examination angle | L= | 520 | mm= | 0.520 m |
| (5) The distance between the center of bolt and the center of gravity of the unit | Lg= | 225 | mm(Lg≦L/2)= | 0.225 m |

4.The examination calculation (by rounding off to the first decimal place of each item)

| | | | |
|---|---|---|---|
| (1) The horizontal seismic coeffcient for designing | Kh= | 1.0 | |
| (2) The vertical seismic coefficient for designing | Kv=Kh/2= | 0.5 | |
| (3) The horizontal earthquake forces for designing | Fh=Kh・W・9.8= | 999.6 | N |
| (4) The vertical earthquake forces for designing | Fv=Kv・W・9.8= | 499.8 | N |
| (5) The withdrawal strength of the anchor bolt $Rb=\frac{Fh \cdot Hg-(W \cdot 9.8-Fv) \cdot Lg}{L \cdot Nt}$ | = | 324.4 | N |
| (6) The shear forces of the anchor bolt | Q=Fh/N= | 249.9 | N |
| (7) The stress arising to the anchor bolt | | | |
| 1.The tensile stress. | $\sigma$=Rb/A= | 4.2 | MPa < ft = 176.4 MPa |
| 2.The shearing stress. | $\tau$=Q/A= | 3.2 | MPa < fs = 132.3 MPa |
| 3.The stress when affected by both the shearing and the tensile at the same time. fts=1.4ft-1.6 $\tau$ = | | 241.8 | MPa |
| $\sigma$= 4.2 MPa | < fts= | 241.8 | MPa |
| (8) The construction way of the anchor bolt | | | |
| 1.The construction way of the anchor bolt. | = | Boxed J type anchor | |
| 2.The thickness of the concrete. | = | 120 mm | = 0.120 m |
| 3.The length of buried part of bolt. | = | 70 mm | = 0.070 m |
| 4.The permissible withdrawal weight. | Ta= | 3136 N | > Rb= 324 N |

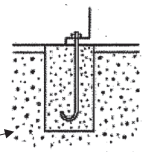

Since the results from the examination above, the anchor bolt has enough strength

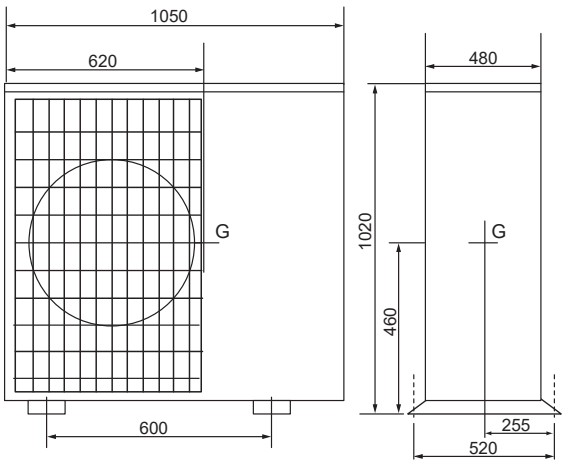

1.Type: Power Inverter Outdoor unit

2.Model name: PUD-SWM80YAA(-BS)

3.Specification

| | | | | |
|---|---|---|---|---|
| (1) Unit mass | W= | 114 | kg | |
| (2) Anchor bolt | | | | |
| 1.The total number of bolts. | N= | 4 | | |
| 2.The size and shape. | "=M | 10 | type | |
| 3.The axis section area per one bolt. | A= | 78 | $mm^2$= | $78 \times 10^{-6}$ $m^2$ |
| 4.The total number of bolts in one side which be pulled stronger when the unit inverted. | Nt= | 2 | | |
| (3) The height between the installing surface and the center of gravity of the unit | Hg= | 450 | mm= | 0.450 m |
| (4) The bolt-span from the examination angle | L= | 520 | mm= | 0.520 m |
| (5) The distance between the center of bolt and the center of gravity of the unit | Lg= | 225 | mm(Lg≦L/2)= | 0.225 m |

4.The examination calculation (by rounding off to the first decimal place of each item)

| | | | | |
|---|---|---|---|---|
| (1) The horizontal seismic coeffcient for designing | Kh= | 1.0 | | |
| (2) The vertical seismic coefficient for designing | Kv=Kh/2= | 0.5 | | |
| (3) The horizontal earthquake forces for designing | Fh=Kh·W·9.8= | 1117.2 | N | |
| (4) The vertical earthquake forces for designing | Fv=Kv·W·9.8= | 558.6 | N | |
| (5) The withdrawal strength of the anchor bolt $Rb=\frac{Fh \cdot Hg-(W \cdot 9.8-Fv) \cdot Lg}{L \cdot Nt}$ | = | 362.6 | N | |
| (6) The shear forces of the anchor bolt | Q=Fh/N= | 297.3 | N | |
| (7) The stress arising to the anchor bolt | | | | |
| 1.The tensile stress. | $\sigma$=Rb/A= | 4.6 | MPa < ft = 176.4 MPa | |
| 2.The shearing stress. | $\tau$=Q/A= | 3.6 | MPa < fs = 132.3 MPa | |
| 3.The stress when affected by both the shearing and the tensile at the same time. fts=1.4ft-1.6 $\tau$ = | | 241.2 | MPa | |
| $\sigma$= 4.6 MPa | < fts= | 241.2 | MPa | |
| (8) The construction way of the anchor bolt | | | | |
| 1.The construction way of the anchor bolt. | = | Boxed J type anchor | | |
| 2.The thickness of the concrete. | = | 120 | mm = | 0.120 m |
| 3.The length of buried part of bolt. | = | 70 | mm = | 0.070 m |
| 4.The permissible withdrawal weight. | Ta= | 3136 | N > | Rb= 363 N |

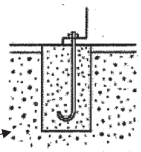

Since the results from the examination above, the anchor bolt has enough strength

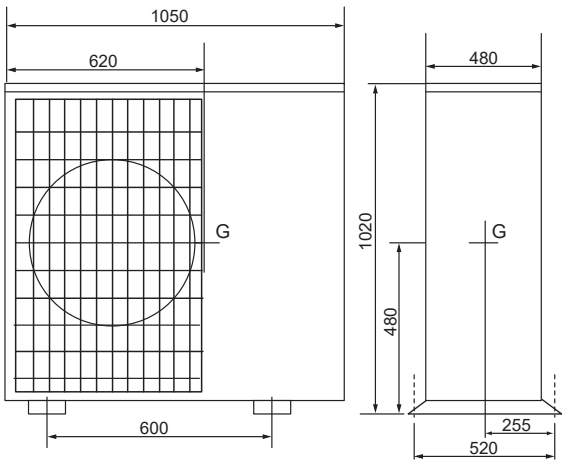

1.Type: Power Inverter Outdoor unit

2.Model name: PUD-SHWM80YAA(-BS)

3.Specification

(1) Unit mass W= 115 kg

(2) Anchor bolt

1.The total number of bolts. N= 4

2.The size and shape. "=M 10 type

3.The axis section area per one bolt. A= 78 $mm^2$= $78 \times 10^{-6}$ $m^2$

4.The total number of bolts in one side which be pulled stronger when the unit inverted. Nt= 2

(3) The height between the installing surface and the center of gravity of the unit Hg= 450 mm= 0.450 m

(4) The bolt-span from the examination angle L= 520 mm= 0.520 m

(5) The distance between the center of bolt and the center of gravity of the unit Lg= 225 mm(Lg≦L/2)= 0.225 m

4.The examination calculation (by rounding off to the first decimal place of each item)

(1) The horizontal seismic coeffcient for designing Kh= 1.0

(2) The vertical seismic coefficient for designing Kv=Kh/2= 0.5

(3) The horizontal earthquake forces for designing Fh=Kh･W･9.8= 1127.0 N

(4) The vertical earthquake forces for designing Fv=Kv･W･9.8= 563.5 N

(5) The withdrawal strength of the anchor bolt $Rb=\frac{Fh \cdot Hg-(W \cdot 9.8-Fv) \cdot Lg}{L \cdot Nt}$ = 365.7 N

(6) The shear forces of the anchor bolt Q=Fh/N= 281.8 N

(7) The stress arising to the anchor bolt

1.The tensile stress. $\sigma$=Rb/A= 4.7 MPa < ft = 176.4 MPa

2.The shearing stress. $\tau$=Q/A= 3.6 MPa < fs = 132.3 MPa

3.The stress when affected by both the shearing and the tensile at the same time. fts=1.4ft-1.6 $\tau$ = 241.2 MPa

$\sigma$= 4.7 MPa < fts= 241.2 MPa

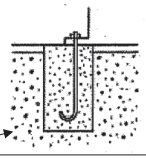

(8) The construction way of the anchor bolt

1.The construction way of the anchor bolt. = Boxed J type anchor

2.The thickness of the concrete. = 120 mm = 0.120 m

3.The length of buried part of bolt. = 70 mm = 0.070 m

4.The permissible withdrawal weight. Ta= 3136 N > Rb= 366 N

Since the results from the examination above, the anchor bolt has enough strength

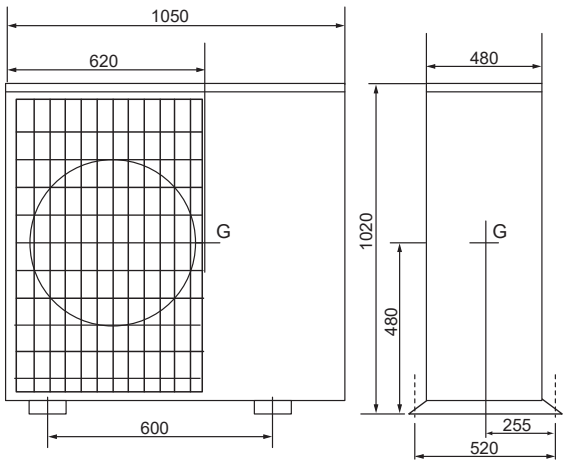

1.Type: Power Inverter Outdoor unit

2.Model name: PUD-SWM100VAA(-BS), PUD-SWM120VAA(-BS)

## 3.Specification

| | | | | |
|---|---|---|---|---|
| (1) Unit mass | W= | 107 | kg | |
| (2) Anchor bolt | | | | |
| 1.The total number of bolts. | N= | 4 | | |
| 2.The size and shape. | "=M | 10 | type | |
| 3.The axis section area per one bolt. | A= | 78 | $mm^2$= | $78 \times 10^{-6}$ $m^2$ |
| 4.The total number of bolts in one side which be pulled stronger when the unit inverted. | Nt= | 2 | | |
| (3) The height between the installing surface and the center of gravity of the unit | Hg= | 450 | mm= | 0.450 m |
| (4) The bolt-span from the examination angle | L= | 520 | mm= | 0.520 m |
| (5) The distance between the center of bolt and the center of gravity of the unit | Lg= | 225 | mm(Lg≦L/2)= | 0.225 m |

## 4.The examination calculation (by rounding off to the first decimal place of each item)

| | | | | |
|---|---|---|---|---|
| (1) The horizontal seismic coeffcient for designing | Kh= | 1.0 | | |
| (2) The vertical seismic coefficient for designing | Kv=Kh/2= | 0.5 | | |
| (3) The horizontal earthquake forces for designing | Fh=Kh·W·9.8= | 1048.6 | N | |
| (4) The vertical earthquake forces for designing | Fv=Kv·W·9.8= | 524.3 | N | |
| (5) The withdrawal strength of the anchor bolt $Rb=\frac{Fh \cdot Hg-(W \cdot 9.8-Fv) \cdot Lg}{L \cdot Nt}$ | = | 340.3 | N | |
| (6) The shear forces of the anchor bolt | Q=Fh/N= | 262.2 | N | |
| (7) The stress arising to the anchor bolt | | | | |
| 1.The tensile stress. | $\sigma$=Rb/A= | 4.4 | MPa < ft = 176.4 MPa | |
| 2.The shearing stress. | $\tau$=Q/A= | 3.4 | MPa < fs = 132.3 MPa | |
| 3.The stress when affected by both the shearing and the tensile at the same time. fts=1.4ft-1.6 $\tau$ = | | 241.5 | MPa | |
| $\sigma$= 4.4 MPa | < fts= | 241.5 | MPa | |
| (8) The construction way of the anchor bolt | | | | |
| 1.The construction way of the anchor bolt. | = | Boxed J type anchor | | |
| 2.The thickness of the concrete. | = | 120 | mm = | 0.120 m |
| 3.The length of buried part of bolt. | = | 70 | mm = | 0.070 m |
| 4.The permissible withdrawal weight. | Ta= | 3136 | N > | Rb= 340 N |

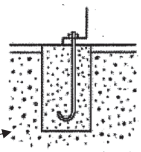

Since the results from the examination above, the anchor bolt has enough strength

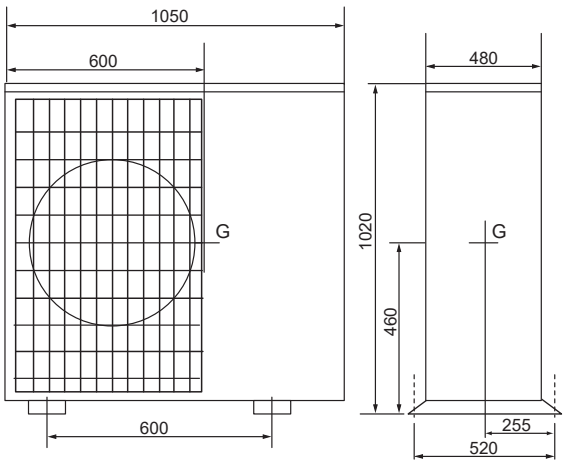

1.Type: Power Inverter Outdoor unit

2.Model name: PUD-SHWM100VAA(-BS), PUD-SHWM120VAA(-BS)

3.Specification

| | | | | |
|---|---|---|---|---|
| (1) Unit mass | W= | 108 | kg | |
| (2) Anchor bolt | | | | |
| 1.The total number of bolts. | N= | 4 | | |
| 2.The size and shape. | "=M | 10 | type | |
| 3.The axis section area per one bolt. | A= | 78 | $mm^2$= | $78 \times 10^{-6}$ $m^2$ |
| 4.The total number of bolts in one side which be pulled stronger when the unit inverted. | Nt= | 2 | | |
| (3) The height between the installing surface and the center of gravity of the unit | Hg= | 450 | mm= | 0.450 m |
| (4) The bolt-span from the examination angle | L= | 520 | mm= | 0.520 m |
| (5) The distance between the center of bolt and the center of gravity of the unit | Lg= | 225 | mm(Lg≦L/2)= | 0.225 m |

4.The examination calculation (by rounding off to the first decimal place of each item)

| | | | |
|---|---|---|---|
| (1) The horizontal seismic coeffcient for designing | Kh= | 1.0 | |
| (2) The vertical seismic coefficient for designing | Kv=Kh/2= | 0.5 | |
| (3) The horizontal earthquake forces for designing | Fh=Kh・W・9.8= | 1058.4 | N |
| (4) The vertical earthquake forces for designing | Fv=Kv・W・9.8= | 529.2 | N |
| (5) The withdrawal strength of the anchor bolt $Rb=\frac{Fh \cdot Hg-(W \cdot 9.8-Fv) \cdot Lg}{L \cdot Nt}$ | = | 343.5 | N |
| (6) The shear forces of the anchor bolt | Q=Fh/N= | 264.6 | N |
| (7) The stress arising to the anchor bolt | | | |
| 1.The tensile stress. | $\sigma$=Rb/A= | 4.4 | MPa < ft = 176.4 MPa |
| 2.The shearing stress. | $\tau$=Q/A= | 3.4 | MPa < fs = 132.3 MPa |
| 3.The stress when affected by both the shearing and the tensile at the same time. fts=1.4ft-1.6 $\tau$ = | | 241.5 | MPa |
| $\sigma$= 4.4 MPa | < fts= | 241.5 | MPa |
| (8) The construction way of the anchor bolt | | | |
| 1.The construction way of the anchor bolt. | = | Boxed J type anchor | |
| 2.The thickness of the concrete. | = | 120 mm = | 0.120 m |
| 3.The length of buried part of bolt. | = | 70 mm = | 0.070 m |
| 4.The permissible withdrawal weight. | Ta= | 3136 N | > Rb= 343 N |

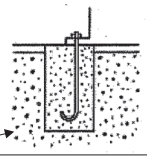

Since the results from the examination above, the anchor bolt has enough strength

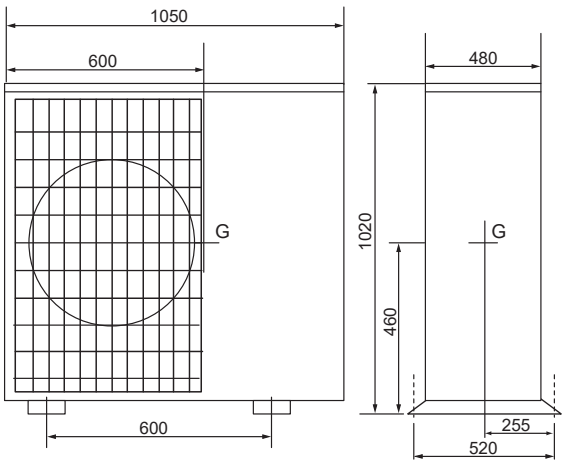

1.Type: Power Inverter Outdoor unit

2.Model name: PUD-SWM100YAA(-BS), PUD-SWM120YAA(-BS)

3.Specification

| | | | | |
|---|---|---|---|---|
| (1) Unit mass | W= | 120 | kg | |
| (2) Anchor bolt | | | | |
| 1.The total number of bolts. | N= | 4 | | |
| 2.The size and shape. | "=M | 10 | type | |
| 3.The axis section area per one bolt. | A= | 78 | $mm^2$= | $78 \times 10^{-6}$ $m^2$ |
| 4.The total number of bolts in one side which be pulled stronger when the unit inverted. | Nt= | 2 | | |
| (3) The height between the installing surface and the center of gravity of the unit | Hg= | 450 | mm= | 0.450 m |
| (4) The bolt-span from the examination angle | L= | 520 | mm= | 0.520 m |
| (5) The distance between the center of bolt and the center of gravity of the unit | Lg= | 225 | mm(Lg≦L/2)= | 0.225 m |

4.The examination calculation (by rounding off to the first decimal place of each item)

| | | | | |
|---|---|---|---|---|
| (1) The horizontal seismic coeffcient for designing | Kh= | 1.0 | | |
| (2) The vertical seismic coefficient for designing | Kv=Kh/2= | 0.5 | | |
| (3) The horizontal earthquake forces for designing | Fh=Kh·W·9.8= | 1176.0 | N | |
| (4) The vertical earthquake forces for designing | Fv=Kv·W·9.8= | 588.0 | N | |
| (5) The withdrawal strength of the anchor bolt $Rb=\frac{Fh \cdot Hg-(W \cdot 9.8-Fv) \cdot Lg}{L \cdot Nt}$ | = | 381.6 | N | |
| (6) The shear forces of the anchor bolt | Q=Fh/N= | 294.0 | N | |
| (7) The stress arising to the anchor bolt | | | | |
| 1.The tensile stress. | $\sigma$=Rb/A= | 4.9 | MPa < ft = 176.4 MPa | |
| 2.The shearing stress. | $\tau$=Q/A= | 3.8 | MPa < fs = 132.3 MPa | |
| 3.The stress when affected by both the shearing and the tensile at the same time. fts=1.4ft-1.6 $\tau$ = | | 240.9 | MPa | |
| $\sigma$= 4.9 MPa | < fts= | 240.9 | MPa | |
| (8) The construction way of the anchor bolt | | | | |
| 1.The construction way of the anchor bolt. | = | Boxed J type anchor | | |
| 2.The thickness of the concrete. | = | 120 | mm = | 0.120 m |
| 3.The length of buried part of bolt. | = | 70 | mm = | 0.070 m |
| 4.The permissible withdrawal weight. | Ta= | 3136 | N > | Rb= 382 N |

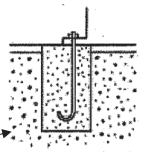

Since the results from the examination above, the anchor bolt has enough strength

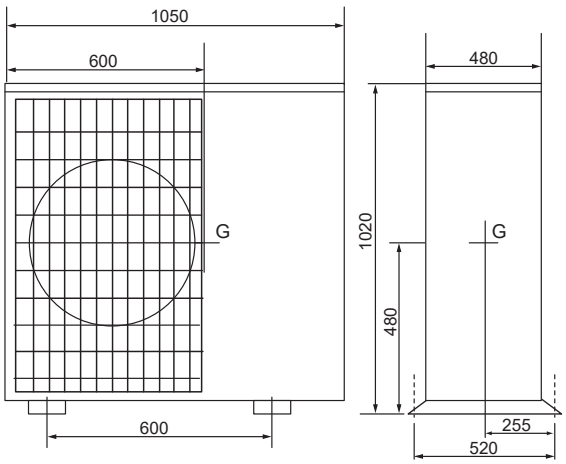

1.Type: Power Inverter Outdoor unit

2.Model name: PUD-SHWM100YAA(-BS), PUD-SHWM120YAA(-BS)

3.Specification

| | | | | |
|---|---|---|---|---|
| (1) Unit mass | W= | 121 | kg | |
| (2) Anchor bolt | | | | |
| 1.The total number of bolts. | N= | 4 | | |
| 2.The size and shape. | "=M | 10 | type | |
| 3.The axis section area per one bolt. | A= | 78 | $mm^2$= | $78 \times 10^{-6}$ $m^2$ |
| 4.The total number of bolts in one side which be pulled stronger when the unit inverted. | Nt= | 2 | | |
| (3) The height between the installing surface and the center of gravity of the unit | Hg= | 450 | mm= | 0.450 m |
| (4) The bolt-span from the examination angle | L= | 520 | mm= | 0.520 m |
| (5) The distance between the center of bolt and the center of gravity of the unit | Lg= | 225 | mm(Lg≦L/2)= | 0.225 m |

4.The examination calculation (by rounding off to the first decimal place of each item)

| | | | |
|---|---|---|---|
| (1) The horizontal seismic coeffcient for designing | Kh= | 1.0 | |
| (2) The vertical seismic coefficient for designing | Kv=Kh/2= | 0.5 | |
| (3) The horizontal earthquake forces for designing | Fh=Kh・W・9.8= | 1185.8 | N |
| (4) The vertical earthquake forces for designing | Fv=Kv・W・9.8= | 592.9 | N |
| (5) The withdrawal strength of the anchor bolt $Rb=\frac{Fh \cdot Hg-(W \cdot 9.8-Fv) \cdot Lg}{L \cdot Nt}$ | = | 384.8 | N |
| (6) The shear forces of the anchor bolt | Q=Fh/N= | 296.5 | N |
| (7) The stress arising to the anchor bolt | | | |
| 1.The tensile stress. | $\sigma$=Rb/A= | 4.9 | MPa < ft = 176.4 MPa |
| 2.The shearing stress. | $\tau$=Q/A= | 3.8 | MPa < fs = 132.3 MPa |
| 3.The stress when affected by both the shearing and the tensile at the same time. fts=1.4ft-1.6 $\tau$ = | | 240.9 | MPa |
| $\sigma$= 4.9 MPa | < fts= | 240.9 | MPa |
| (8) The construction way of the anchor bolt | | | |
| 1.The construction way of the anchor bolt. | = | Boxed J type anchor | |
| 2.The thickness of the concrete. | = | 120 mm | = 0.120 m |
| 3.The length of buried part of bolt. | = | 70 mm | = 0.070 m |
| 4.The permissible withdrawal weight. | Ta= | 3136 N | > Rb= 385 N |

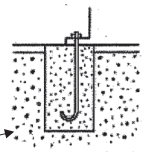

Since the results from the examination above, the anchor bolt has enough strength

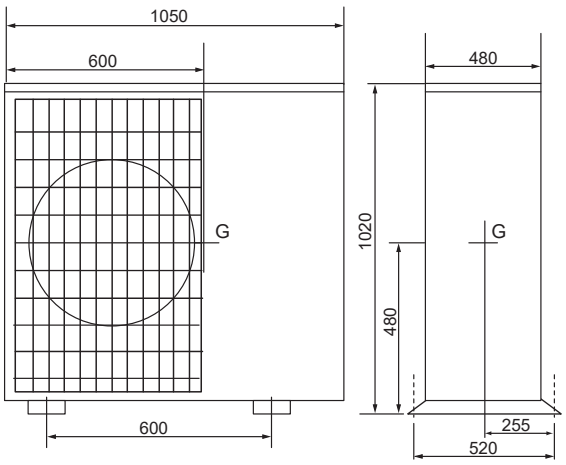

1.Type: Power Inverter Outdoor unit

2.Model name: PUD-SHWM140VAA(-BS)

3.Specification

| | | | | |
|---|---|---|---|---|
| (1) Unit mass | W= | 110 | kg | |
| (2) Anchor bolt | | | | |
| 1.The total number of bolts. | N= | 4 | | |
| 2.The size and shape. | "=M | 10 | type | |
| 3.The axis section area per one bolt. | A= | 78 | $mm^2$= | $78 \times 10^{-6}$ $m^2$ |
| 4.The total number of bolts in one side which be pulled stronger when the unit inverted. | Nt= | 2 | | |
| (3) The height between the installing surface and the center of gravity of the unit | Hg= | 450 | mm= | 0.450 m |
| (4) The bolt-span from the examination angle | L= | 520 | mm= | 0.520 m |
| (5) The distance between the center of bolt and the center of gravity of the unit | Lg= | 225 | mm(Lg≦L/2)= | 0.225 m |

4.The examination calculation (by rounding off to the first decimal place of each item)

| | | | | |
|---|---|---|---|---|
| (1) The horizontal seismic coeffcient for designing | Kh= | 1.0 | | |
| (2) The vertical seismic coefficient for designing | Kv=Kh/2= | 0.5 | | |
| (3) The horizontal earthquake forces for designing | Fh=Kh·W·9.8= | 1078.0 | N | |
| (4) The vertical earthquake forces for designing | Fv=Kv·W·9.8= | 539.0 | N | |
| (5) The withdrawal strength of the anchor bolt $Rb=\frac{Fh \cdot Hg-(W \cdot 9.8-Fv) \cdot Lg}{L \cdot Nt}$ | = | 349.8 | N | |
| (6) The shear forces of the anchor bolt | Q=Fh/N= | 269.5 | N | |
| (7) The stress arising to the anchor bolt | | | | |
| 1.The tensile stress. | $\sigma$=Rb/A= | 4.5 | MPa < ft = 176.4 MPa | |
| 2.The shearing stress. | $\tau$=Q/A= | 3.5 | MPa < fs = 132.3 MPa | |
| 3.The stress when affected by both the shearing and the tensile at the same time. fts=1.4ft-1.6 $\tau$ = | | 241.4 | MPa | |
| $\sigma$= 4.5 MPa | < fts= | 241.4 | MPa | |
| (8) The construction way of the anchor bolt | | | | |
| 1.The construction way of the anchor bolt. | = | Boxed J type anchor | | |
| 2.The thickness of the concrete. | = | 120 | mm = | 0.120 m |
| 3.The length of buried part of bolt. | = | 70 | mm = | 0.070 m |
| 4.The permissible withdrawal weight. | Ta= | 3136 | N > | Rb= 350 N |

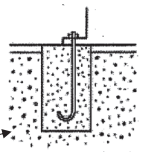

Since the results from the examination above, the anchor bolt has enough strength

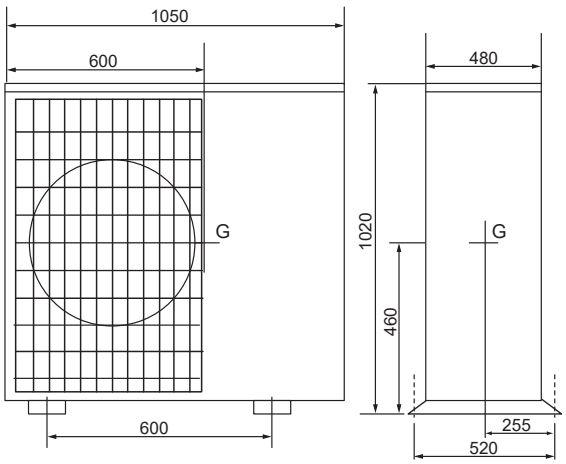

1.Type: Power Inverter Outdoor unit

2.Model name: PUD-SHWM140YAA(-BS)

3.Specification

(1) Unit mass W= 122 kg

(2) Anchor bolt

1.The total number of bolts. N= 4

2.The size and shape. "=M 10 type

3.The axis section area per one bolt. A= 78 $mm^2$= $78 \times 10^{-6}$ $m^2$

4.The total number of bolts in one side which be pulled stronger when the unit inverted. Nt= 2

(3) The height between the installing surface and the center of gravity of the unit Hg= 450 mm= 0.450 m

(4) The bolt-span from the examination angle L= 520 mm= 0.520 m

(5) The distance between the center of bolt and the center of gravity of the unit Lg= 225 mm(Lg≦L/2)= 0.225 m

4.The examination calculation (by rounding off to the first decimal place of each item)

(1) The horizontal seismic coeffcient for designing Kh= 1.0

(2) The vertical seismic coefficient for designing Kv=Kh/2= 0.5

(3) The horizontal earthquake forces for designing Fh=Kh･W･9.8= 1195.6 N

(4) The vertical earthquake forces for designing Fv=Kv･W･9.8= 597.8 N

(5) The withdrawal strength of the anchor bolt $Rb=\frac{Fh \cdot Hg-(W \cdot 9.8-Fv) \cdot Lg}{L \cdot Nt}$ = 388.0 N

(6) The shear forces of the anchor bolt Q=Fh/N= 298.9 N

(7) The stress arising to the anchor bolt

1.The tensile stress. $\sigma$=Rb/A= 5.0 MPa < ft = 176.4 MPa

2.The shearing stress. $\tau$=Q/A= 3.8 MPa < fs = 132.3 MPa

3.The stress when affected by both the shearing and the tensile at the same time. fts=1.4ft-1.6 $\tau$ = 240.9 MPa

$\sigma$= 5.0 MPa < fts= 240.9 MPa

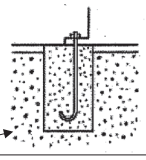

(8) The construction way of the anchor bolt

1.The construction way of the anchor bolt. = Boxed J type anchor

2.The thickness of the concrete. = 120 mm = 0.120 m

3.The length of buried part of bolt. = 70 mm = 0.070 m

4.The permissible withdrawal weight. Ta= 3136 N > Rb= 388 N

Since the results from the examination above, the anchor bolt has enough strength

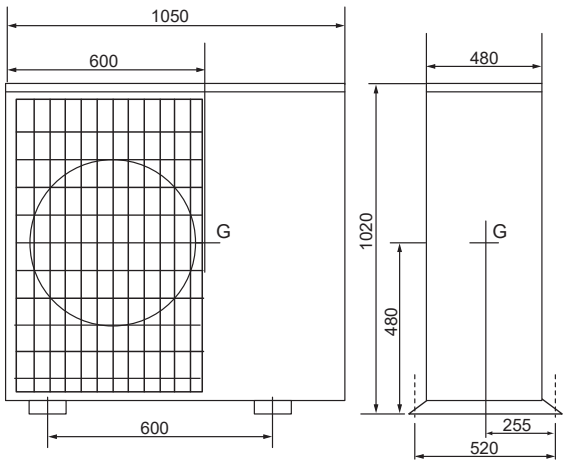

| Display | Contents to be inspected (During operation) |
|---|---|
| U1 | Abnormal high pressure (63H operated) |
| U2 | Abnormal temperature of discharge/Comp. Surface, shortage of refrigerant |
| U3 | Open/short (RT62) |
| U4 | Open/short(RT61, RT64, RT65,RT68) |
| U5 | Abnormal temperature of heatsink |
| U6 | Abnormality in power module |
| U7 | Abnormal super heat |
| U8 | Abnormality in outdoor fan motor |
| U9 | Voltage error, Current sensor error (Input current) |
| Ud | Overheat error |
| UF | Compressor overcurrent shutoff (When Comp. locked) |
| UH | Current sensor error (Comp. current), Input overcurrent shutoff |
| UL | Abnormal low pressure (63L operated) |
| UP | Compressor overcurrent shutoff |
| P4 | Drain sensor abnormality, Contact failure of drain float switch |
| P5 | Drain over flow protection |
| P6 | Freezing/overheating protection |
| P8 | Abnormality temperature of pipe |
| PA | Water leakage |
| Pb | Fan trouble (Indoor unit) |
| UE | Closed valve |
| PE | Abnormal temperature of inlet water |
| Ed | Serial communication error |
| EA, Eb, EC | Incorrect wiring indoor / outdoor unit connection |
| E6 - E9 | Indoor / Outdoor unit communication error |
| E0, E3 - E5 | Remote communication error |
| EE, EF | Combination error, undefined error |
| A0 | Duplex address error |
| A2 | Transmission processor hardware error |
| A3 | Transmission bus BUSY error |
| A6 | Signal communication error with transmission processor |
| A7 | No ACK error |
| A8 | No response frame error |
| L6 | Circulation water freeze protection |
| PL | Outdoor refrigerant system abnormality |

| Display | Contents to be inspected (When power is turned on) |
|---|---|
| F3 | 63L connector (red) open |
| F5 | 63H connector (yellow) open |
| F9 | 2 connectors (63H and 63L) open |
| FC | Outdoor control system error |

## (1)Packaged-type units

■ **PUZ-WM50VHA(-BS)** **PUZ-WM60VAA(-BS)** **PUZ-WM85VAA(-BS)** **PUZ-WM85YAA(-BS)**
**PUZ-WM112VAA(-BS)** **PUZ-WM112YAA(-BS)**

## 1. Selecting the installation location

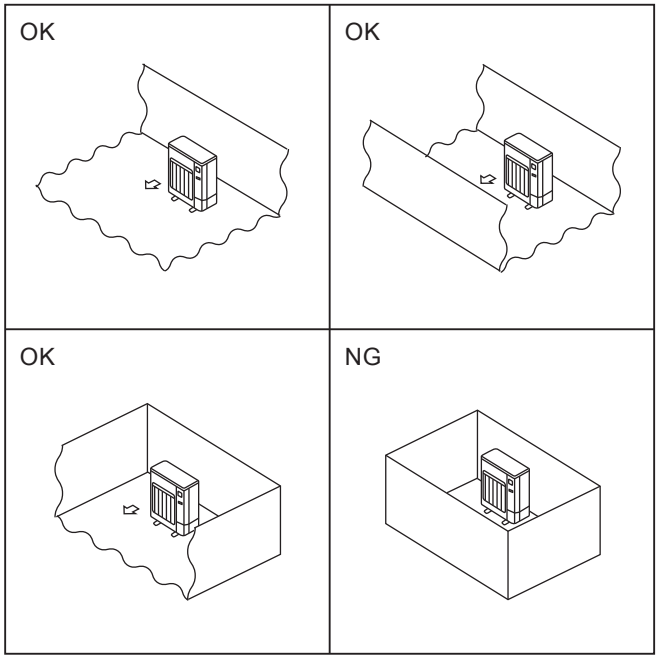


**Fig. 1-1**

### 1.1. Choosing the outdoor unit installation location

- R32 is heavier than air—as well as other refrigerants—so tends to accumulate at the base (in the vicinity of the floor). If R32 accumulates around base, it may reach a flammable concentration in case room is small. To avoid ignition, maintaining a safe work environment is required by ensuring appropriate ventilation. If a refrigerant leak is confirmed in a room or an area where there is insufficient ventilation, refrain from using of flames until the work environment can be improved by ensuring appropriate ventilation.
- Avoid locations exposed to direct sunlight or other sources of heat.
- Select a location from which noise emitted by the unit will not inconvenience neighbors.
- Select a location permitting easy wiring and pipe access to the power source and indoor unit.
- Avoid locations where combustible gases may leak, be produced, flow, or accumulate.
- Note that water may drain from the unit during operation.
- Select a level location that can bear the weight and vibration of the unit.
- Avoid locations where the unit can be covered by snow. In areas where heavy snow fall is anticipated, special precautions such as raising the installation location or installing a hood on the air intake must be taken to prevent the snow from blocking the air intake or blowing directly against it. This can reduce the airflow and a malfunction may result.
- Avoid locations exposed to oil, steam, or sulfuric gas.
- Use the transportation handles of the outdoor unit to transport the unit. If the unit is carried from the bottom, hands or fingers may be pinched.

◎ Install outdoor units in a place where at least one of the four sides is open, and in a sufficiently large space without depressions. (Fig. 1-1)

⚠ **CAUTION:**

- **Perform grounding.**
  **Do not connect the ground wire to a gas pipe, water pipe arrester or telephone ground wire. Defective grounding could cause an electric shock.**
- **Do not install the unit in a place where an inflammable gas leaks.**
  **If gas leaks and accumulates in the area surrounding the unit, it could cause an explosion.**
- **Install a ground leakage breaker depending on the installation place (where it is humid).**
  **If a ground leakage breaker is not installed, it could cause an electric shock.**
- **Perform the drainage/piping work securely according to the installation manual.**
  **If there is a defect in the drainage/piping work, water could drop from the unit and household goods could be wet and damaged.**
- **Fasten a flare nut with a torque wrench as specified in this manual.**
  **When fastened too tight, a flare nut may be broken after a long period and cause a leakage of refrigerant.**

## 1.2. Outline dimensions (Outdoor unit) (Fig. 1-2)

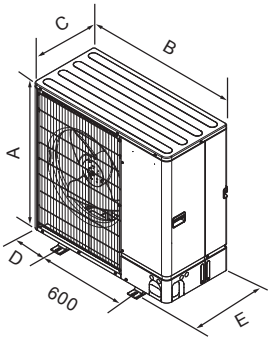


(mm)

| Models | A | B | C | D | E |
|---|---|---|---|---|---|
| 50 | 943 | 950 | 330+30 | 175 | 370 |
| 60 | 1020 | 1050 | 480 | 225 | 520 |
| 85 | 1020 | 1050 | 480 | 225 | 520 |
| 112 | 1020 | 1050 | 480 | 225 | 520 |

**Fig. 1-2**

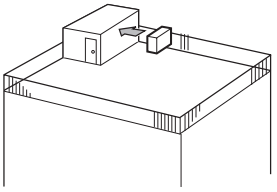

**Fig. 1-3**

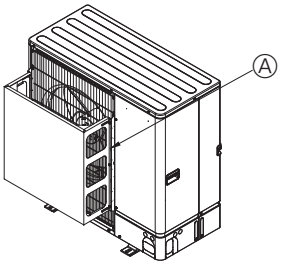


**Fig. 1-4**

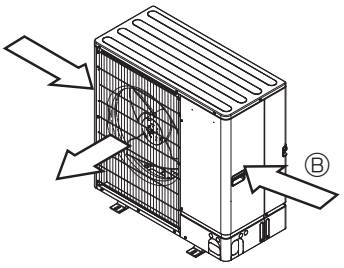


**Fig. 1-5**

## 1.3. Ventilation and service space

### 1.3.1. Windy location installation

When installing the outdoor unit on a rooftop or other location unprotected from the wind, situate the air outlet of the unit so that it is not directly exposed to strong winds. Strong wind entering the air outlet may impede the normal airflow and a malfunction may result.

The following shows three examples of precautions against strong winds.

① Face the air outlet towards the nearest available wall about 35 cm away from the wall. (Fig. 1-3)

② Install an optional air guide if the unit is installed in a location where strong winds from a typhoon, etc. may directly enter the air outlet. (Fig. 1-4)

Ⓐ Air outlet guide

③ Position the unit so that the air outlet blows perpendicularly to the seasonal wind direction, if possible. (Fig. 1-5)

Ⓑ Wind direction

### 1.3.2. When installing a single outdoor unit (Refer to the last page)

Minimum dimensions are as follows, except for Max., meaning Maximum dimensions, indicated.

Refer to the figures for each case.

① Obstacles at rear only (Fig. 1-6)

② Obstacles at rear and above only (Fig. 1-7)

- Do not install the optional air outlet guides for upward airflow.

③ Obstacles at rear and sides only (Fig. 1-8)

④ Obstacles at front only (Fig. 1-9)

⑤ Obstacles at front and rear only (Fig. 1-10)

⑥ Obstacles at rear, sides, and above only (Fig. 1-11)

- Do not install the optional air outlet guides for upward airflow.

### 1.3.3. When installing multiple outdoor units (Refer to the last page)

Leave 50 mm space or more between the units.

Refer to the figures for each case.

① Obstacles at rear only (Fig. 1-12)

② Obstacles at rear and above only (Fig. 1-13)

- No more than 3 units must be installed side by side. In addition, leave space as shown.
- Do not install the optional air outlet guides for upward airflow.

③ Obstacles at front only (Fig. 1-14)

④ Obstacles at front and rear only (Fig. 1-15)

⑤ Single parallel unit arrangement (Fig. 1-16)

* When using an optional air outlet guide installed for upward airflow, the clearance is 500 mm or more.

⑥ Multiple parallel unit arrangement (Fig. 1-17)

* When using an optional air outlet guide installed for upward airflow, the clearance is 1000 mm or more.

⑦ Stacked unit arrangement (Fig. 1-18)

- The units can be stacked up to two units high.
- No more than 2 stacked units must be installed side by side. In addition, leave space as shown.

## ◎1.4. Minimum installation area

If you unavoidably install a unit in a space where all four sides are blocked or there are depressions, confirm that one of these situations (A, B or C) is satisfied.

**Note: These countermeasures are for keeping safety not for specification guarantee.**

A) Secure sufficient installation space (minimum installation area Amin).
Install in a space with an installation area of Amin or more, corresponding to refrigerant quantity M (factory-charged refrigerant + locally added refrigerant).

| M [kg] | Amin [m²] |
|---|---|
| 1.0 | 12 |
| 1.5 | 17 |
| 2.0 | 23 |
| 2.5 | 28 |
| 3.0 | 34 |
| 3.5 | 39 |
| 4.0 | 45 |
| 4.5 | 50 |
| 5.0 | 56 |
| 5.5 | 62 |
| 6.0 | 67 |
| 6.5 | 73 |
| 7.0 | 78 |
| 7.5 | 84 |

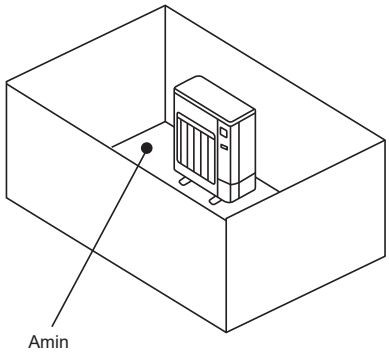


B) Install in a space with a depression height of ≤ 0.125 [m].

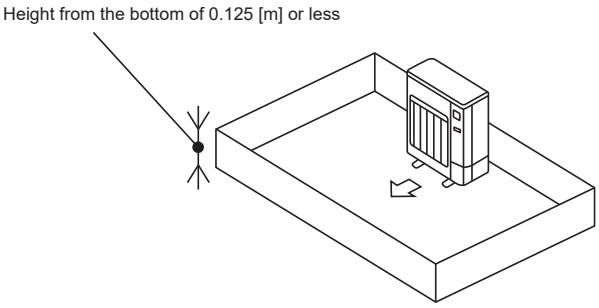


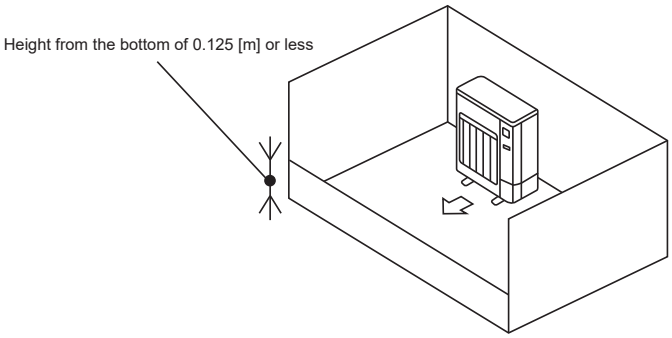


C) Create an appropriate ventilation open area.
Make sure that the width of the open area is 0.9 [m] or more and the height of the open area is 0.15 [m] or more.
However, the height from the bottom of the installation space to the bottom edge of the open area should be 0.125 [m] or less.
Open area should be 75% or more opening.

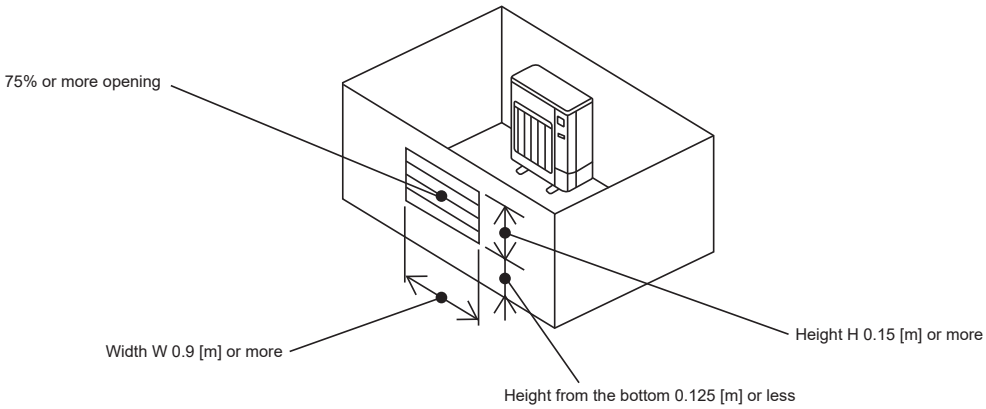

UNIT : mm
( ): WM50

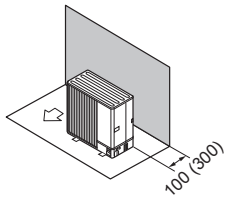


Fig. 1-6

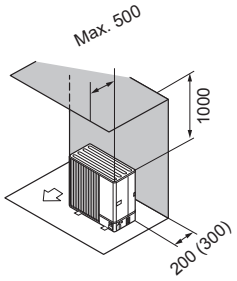


Fig. 1-7

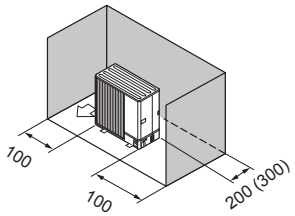


Fig. 1-8

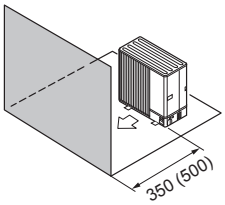


Fig. 1-9

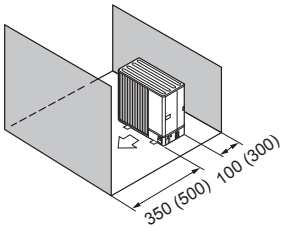


Fig. 1-10

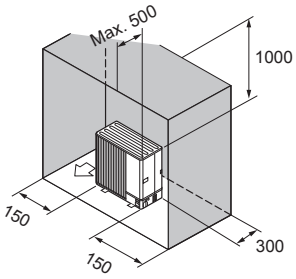


Fig. 1-11

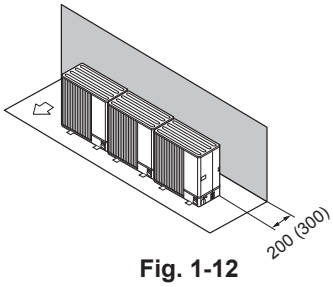


Fig. 1-12

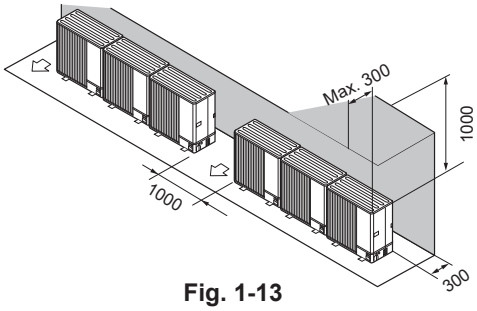


Fig. 1-13

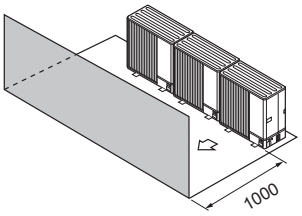


Fig. 1-14

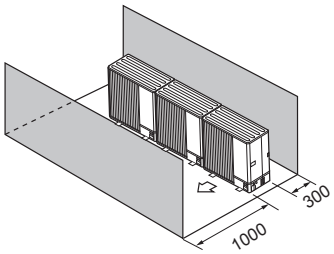


Fig. 1-15

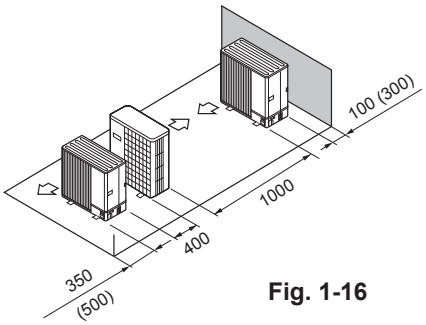


Fig. 1-16

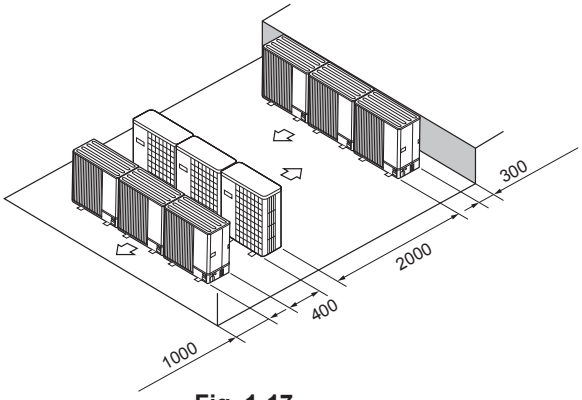


Fig. 1-17

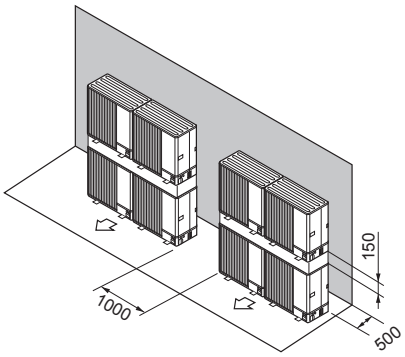


Fig. 1-18

## 2. Installation diagram

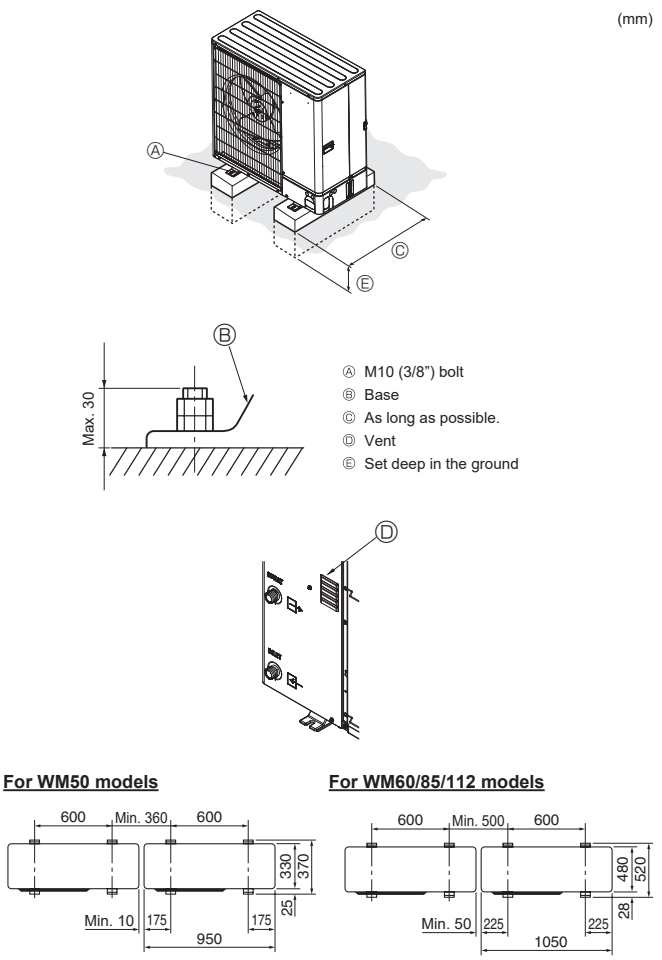


Fig. 2-1

- Be sure to install the unit in a sturdy, level surface to prevent rattling noises during operation. (Fig. 2-1)

<Foundation specifications>

| | |
|---|---|
| Foundation bolt | M10 (3/8") |
| Thickness of concrete | 120 mm |
| Length of bolt | 70 mm |
| Weight-bearing capacity | 320 kg |

- Make sure that the length of the foundation bolt is within 30 mm of the bottom surface of the base.
- Secure the base of the unit firmly with four-M10 foundation bolts in sturdy locations.

**Installing the outdoor unit**

- Do not block the vent. If the vent is blocked, operation will be hindered and breakdown may result.
- In addition to the unit base, use the installation holes on the back of the unit to attach wires, etc., if necessary to install the unit. Use self-tapping screws (ø5 × 15 mm or less) and install on site.

⚠ **WARNING:**

- **The unit must be securely installed on a structure that can sustain its weight. If the unit is mounted on an unstable structure, it may fall down and cause damage or injuries.**
- **The unit must be installed according to the instructions in order to minimize the risk of damage from earthquakes, typhoons, or strong winds. An incorrectly installed unit may fall down and cause damage or injuries.**

⚠ **CAUTION:**

- **Install be unit on a rigid structure to prevent excessive operation sound or vibration.**

■ PUZ-HWM140VHA(-BS) PUZ-HWM140YHA(-BS)

## 1. Selecting the installation location

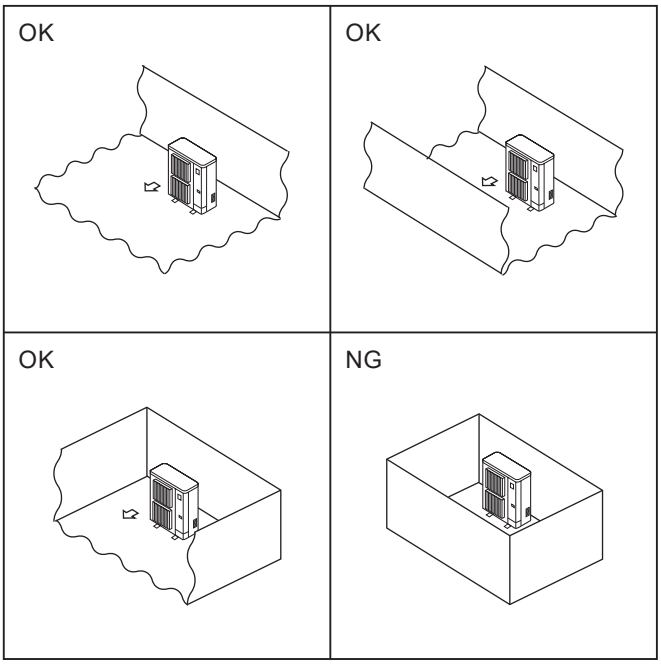


Fig. 1-1

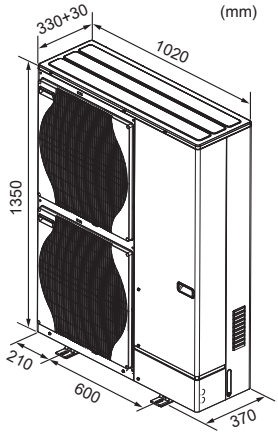


Fig. 1-2

### 1.1. Choosing the outdoor unit installation location

◎ R32 is heavier than air—as well as other refrigerants—so tends to accumulate at the base (in the vicinity of the floor). If R32 accumulates around base, it may reach a flammable concentration in case room is small. To avoid ignition, maintaining a safe work environment is required by ensuring appropriate ventilation. If a refrigerant leak is confirmed in a room or an area where there is insufficient ventilation, refrain from using of flames until the work environment can be improved by ensuring appropriate ventilation.

- Avoid locations exposed to direct sunlight or other sources of heat.
- Select a location from which noise emitted by the unit will not inconvenience neighbors.
- Select a location permitting easy wiring and pipe access to the power source and indoor unit.
- Avoid locations where combustible gases may leak, be produced, flow, or accumulate.
- Note that water may drain from the unit during operation.
- Select a level location that can bear the weight and vibration of the unit.
- Avoid locations where the unit can be covered by snow. In areas where heavy snow fall is anticipated, special precautions such as raising the installation location or installing a hood on the air intake must be taken to prevent the snow from blocking the air intake or blowing directly against it. This can reduce the airflow and a malfunction may result.
- Avoid locations exposed to oil, steam, or sulfuric gas.
- Use the transportation handles of the outdoor unit to transport the unit. If the unit is carried from the bottom, hands or fingers may be pinched.

◎ Install outdoor units in a place where at least one of the four sides is open, and in a sufficiently large space without depressions. (Fig. 1-1)

⚠ **Caution:**

- **Perform grounding.**
  **Do not connect the ground wire to a gas pipe, water pipe arrester or telephone ground wire. Defective grounding could cause an electric shock.**
- **Do not install the unit in a place where an inflammable gas leaks.**
  **If gas leaks and accumulates in the area surrounding the unit, it could cause an explosion.**
- **Install a ground leakage breaker depending on the installation place (where it is humid).**
  **If a ground leakage breaker is not installed, it could cause an electric shock.**
- **Perform the drainage/piping work securely according to the installation manual.**
  **If there is a defect in the drainage/piping work, water could drop from the unit and household goods could be wet and damaged.**
- **Fasten a flare nut with a torque wrench as specified in this manual.**
  **When fastened too tight, a flare nut may be broken after a long period and cause a leakage of refrigerant.**

### 1.2. Outline dimensions (Outdoor unit) (Fig. 1-2)

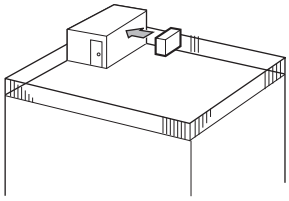

Fig. 1-3

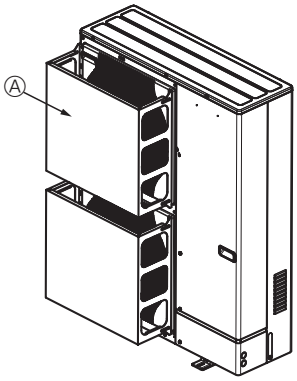


Fig. 1-4

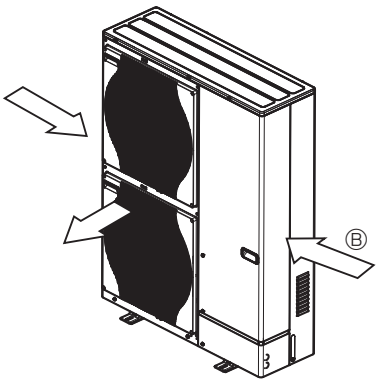


Fig. 1-5

## 1.3. Ventilation and service space

### 1.3.1. Windy location installation

When installing the outdoor unit on a rooftop or other location unprotected from the wind, situate the air outlet of the unit so that it is not directly exposed to strong winds. Strong wind entering the air outlet may impede the normal airflow and a malfunction may result.

The following shows three examples of precautions against strong winds.

① Face the air outlet towards the nearest available wall about 35 cm away from the wall. (Fig. 1-3)

② Install an optional air protect guide if the unit is installed in a location where strong winds from a typhoon, etc. may directly enter the air outlet. (Fig. 1-4)

Ⓐ Air protect guide

③ Position the unit so that the air outlet blows perpendicularly to the seasonal wind direction, if possible. (Fig. 1-5)

Ⓑ Wind direction

## ◎ 1.4. Minimum installation area

If you unavoidably install a unit in a space where all four sides are blocked or there are depressions, confirm that one of these situations (A, B or C) is satisfied.

**Note: These countermeasures are for keeping safety not for specification guarantee.**

A) Secure sufficient installation space (minimum installation area Amin).
Install in a space with an installation area of Amin or more, corresponding to refrigerant quantity M (factory-charged refrigerant + locally added refrigerant).

| M [kg] | Amin [m²] |
|---|---|
| 1.0 | 12 |
| 1.5 | 17 |
| 2.0 | 23 |
| 2.5 | 28 |
| 3.0 | 34 |
| 3.5 | 39 |
| 4.0 | 45 |
| 4.5 | 50 |
| 5.0 | 56 |
| 5.5 | 62 |
| 6.0 | 67 |
| 6.5 | 73 |
| 7.0 | 78 |
| 7.5 | 84 |

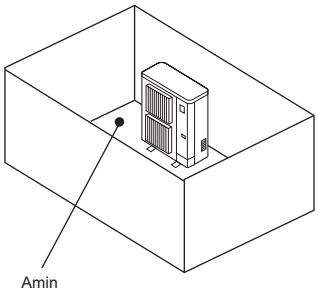


B) Install in a space with a depression height of ≤ 0.125 [m].

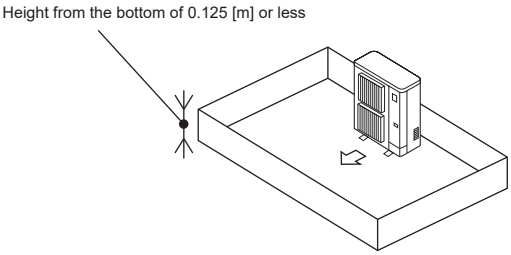


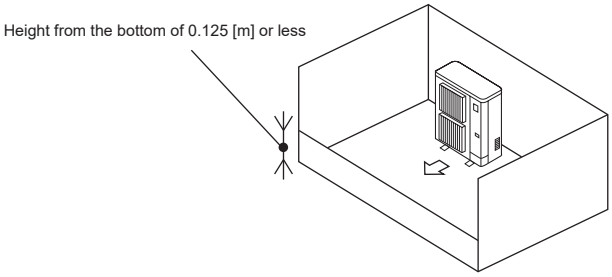


C) Create an appropriate ventilation open area.
Make sure that the width of the open area is 0.9 [m] or more and the height of the open area is 0.15 [m] or more.
However, the height from the bottom of the installation space to the bottom edge of the open area should be 0.125 [m] or less.
Open area should be 75% or more opening.

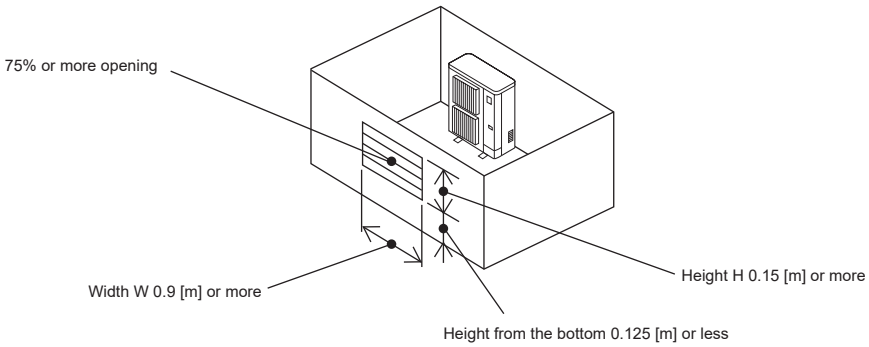

UNIT : mm

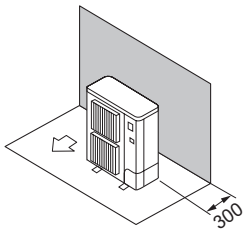


Fig. 1-6

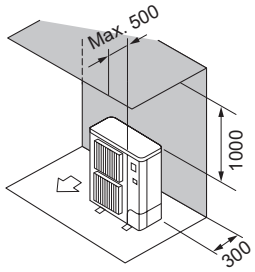


Fig. 1-7

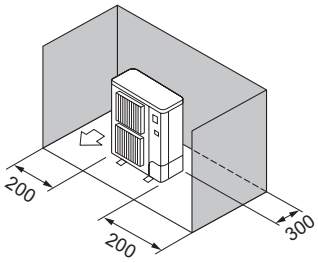


Fig. 1-8

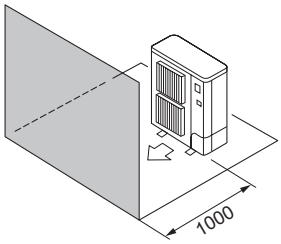


Fig. 1-9

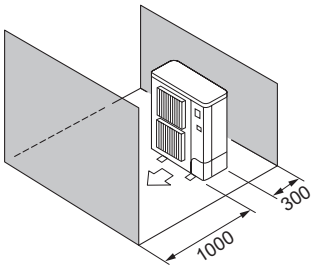


Fig. 1-10

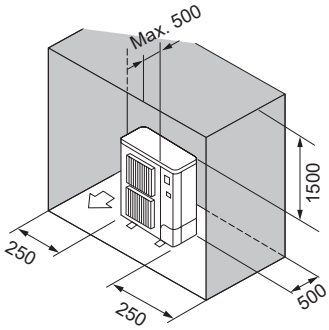


Fig. 1-11

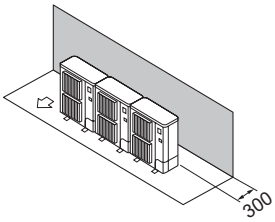


Fig. 1-12

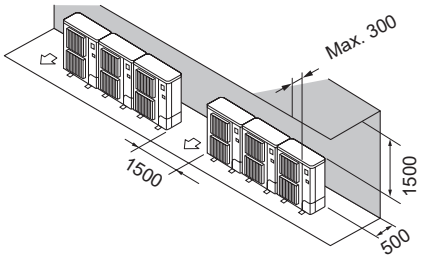


Fig. 1-13

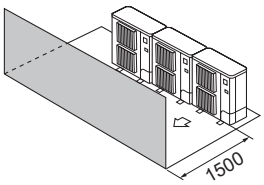


Fig. 1-14

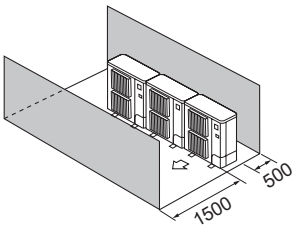


Fig. 1-15

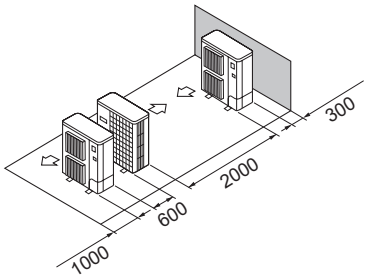


Fig. 1-16

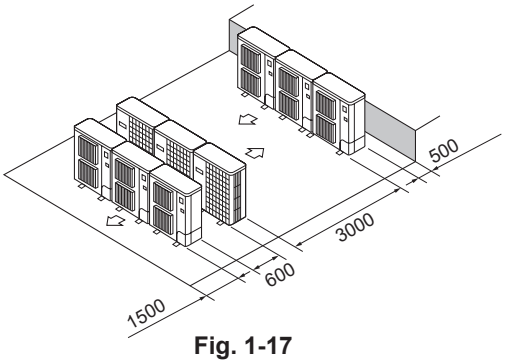


Fig. 1-17

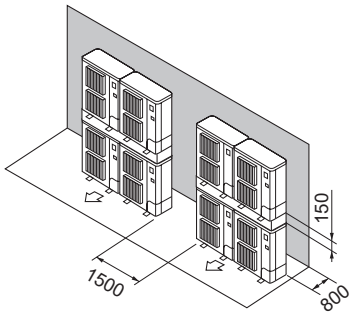


Fig. 1-18

## 2. Installation diagram

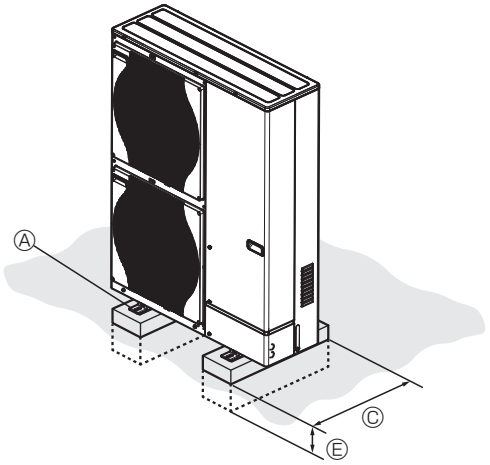


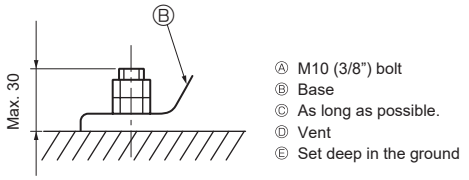


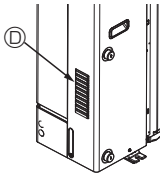


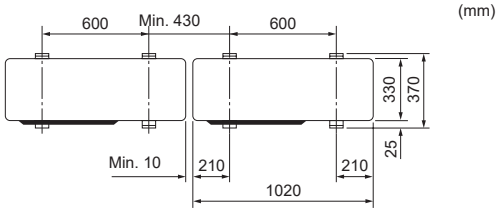


**Fig. 2-1**

- Be sure to install the unit in a sturdy, level surface to prevent rattling noises during operation. (Fig. 2-1)

<Foundation specifications>

| | |
|---|---|
| Foundation bolt | M10 (3/8") |
| Thickness of concrete | 120 mm |
| Length of bolt | 70 mm |
| Weight-bearing capacity | 320 kg |

- Make sure that the length of the foundation bolt is within 30 mm of the bottom surface of the base.
- Secure the base of the unit firmly with four-M10 foundation bolts in sturdy locations.

**Installing the outdoor unit**

- Do not block the vent. If the vent is blocked, operation will be hindered and breakdown may result.
- In addition to the unit base, use the installation holes on the back of the unit to attach wires, etc., if necessary to install the unit. Use self-tapping screws (ø5 × 15 mm or less) and install on site.

⚠ **Warning:**

- **The unit must be securely installed on a structure that can sustain its weight. If the unit is mounted on an unstable structure, it may fall down and cause damage or injuries.**
- **The unit must be installed according to the instructions in order to minimize the risk of damage from earthquakes, typhoons, or strong winds. An incorrectly installed unit may fall down and cause damage or injuries.**

⚠ **Caution:**

- **Install be unit on a rigid structure to prevent excessive operation sound or vibration.**

## (2)Split-type units

■ **SUZ-SWM40VA** **SUZ-SWM60VA** **SUZ-SWM80VA**

## 1. Selecting the installation location

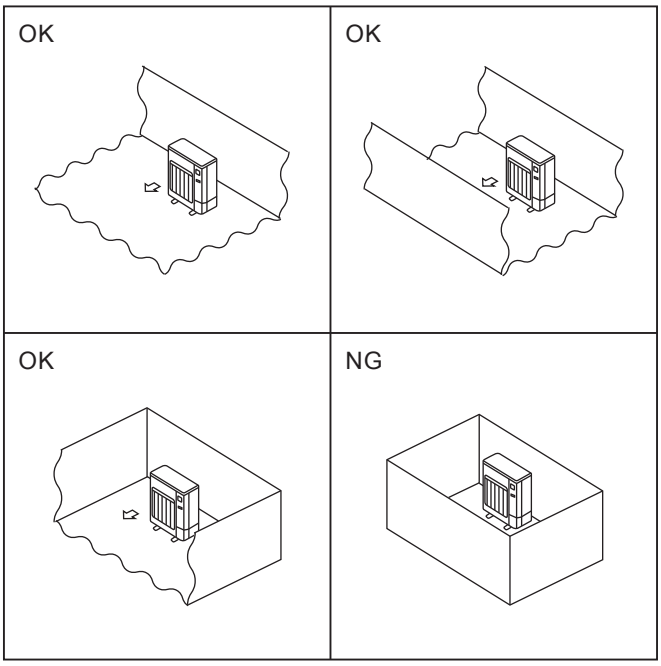


**Fig. 1-1**

### 1.1. Outdoor unit

- R32 is heavier than air—as well as other refrigerants—so tends to accumulate at the base (in the vicinity of the floor). If R32 accumulates around base, it may reach a flammable concentration in case room is small. To avoid ignition, maintaining a safe work environment is required by ensuring appropriate ventilation. If a refrigerant leak is confirmed in a room or an area where there is insufficient ventilation, refrain from using of flames until the work environment can be improved by ensuring appropriate ventilation.
- Where it is not exposed to strong wind.
- Where airflow is good and dustless.
- Where it is not causing the air short cycle.
- Where neighbours are not annoyed by operation sound or hot air.
- Where rigid wall or support is available to prevent the increase of operation sound or vibration.
- Where there is no risk of combustible gas leakage.
- When installing the unit at a high level, be sure to fix the unit legs.
- Where it is at least 3 m away from the antenna of TV set or radio. (Otherwise, images would be disturbed or noise would be generated.)
- Please install it in an area not affected by snowfall or blowing snow. In areas with heavy snow, please install a canopy, a pedestal and/or some baffle boards.
- Install the unit horizontally.
- Refrigerant pipes connection shall be accessible for maintenance purposes.

◎ Install outdoor units in a place where at least one of the four sides is open, and in a sufficiently large space without depressions. (Fig. 1-1)

⚠ **Caution:**

**Avoid the following places for installation where air to water heat pump trouble is liable to occur.**

- **Where there is too much machine oil.**
- **Salty environment as seaside areas.**
- **Hot-spring areas.**
- **Where sulfide gas exists.**
- **Other special atmospheric areas.**

**The outdoor unit produces condensate during the heating operation. Select the installation place to ensure to prevent the outdoor unit and/or the grounds from being wet by drain water or damaged by frozen drain water.**

### ◎1.2. Minimum installation area

If you unavoidably install a unit in a space where all four sides are blocked or there are depressions, confirm that one of these situations (A, B or C) is satisfied.

**Note: These countermeasures are for keeping safety not for specification guarantee.**

A) Secure sufficient installation space (minimum installation area Amin).
Install in a space with an installation area of Amin or more, corresponding to refrigerant quantity M (factory-charged refrigerant + locally added refrigerant).

| M [kg] | Amin [m²] |
|---|---|
| 1.0 | 12 |
| 1.5 | 17 |
| 2.0 | 23 |
| 2.5 | 28 |
| 3.0 | 34 |
| 3.5 | 39 |
| 4.0 | 45 |
| 4.5 | 50 |
| 5.0 | 56 |
| 5.5 | 62 |
| 6.0 | 67 |
| 6.5 | 73 |
| 7.0 | 78 |
| 7.5 | 84 |

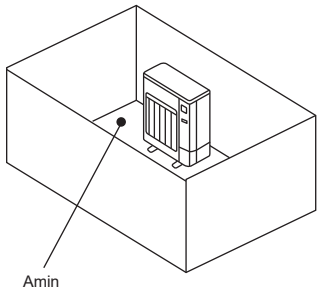

B) Install in a space with a depression height of ≤ 0.125 [m].

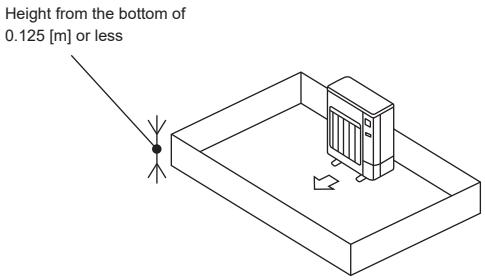


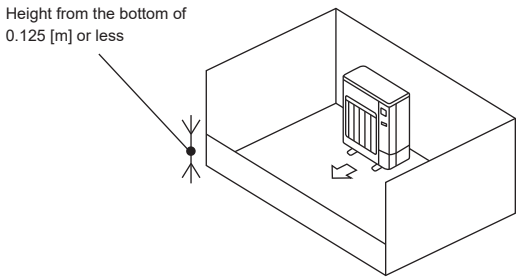


C) Create an appropriate ventilation open area.
Make sure that the width of the open area is 0.9 [m] or more and the height of the open area is 0.15 [m] or more.
However, the height from the bottom of the installation space to the bottom edge of the open area should be 0.125 [m] or less.
Open area should be 75% or more opening.

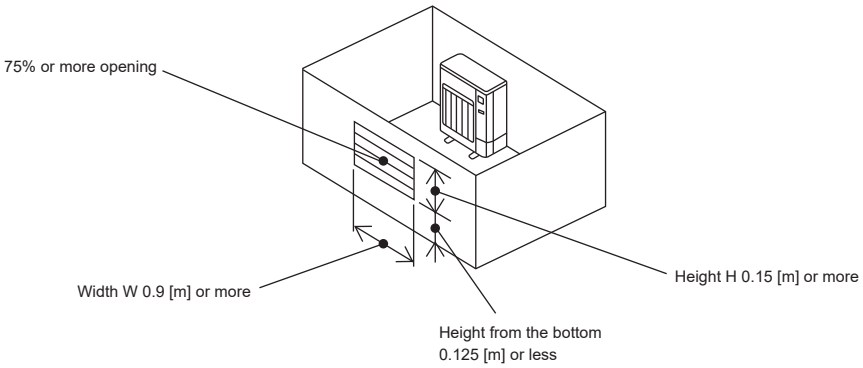


## 2. Installation diagram

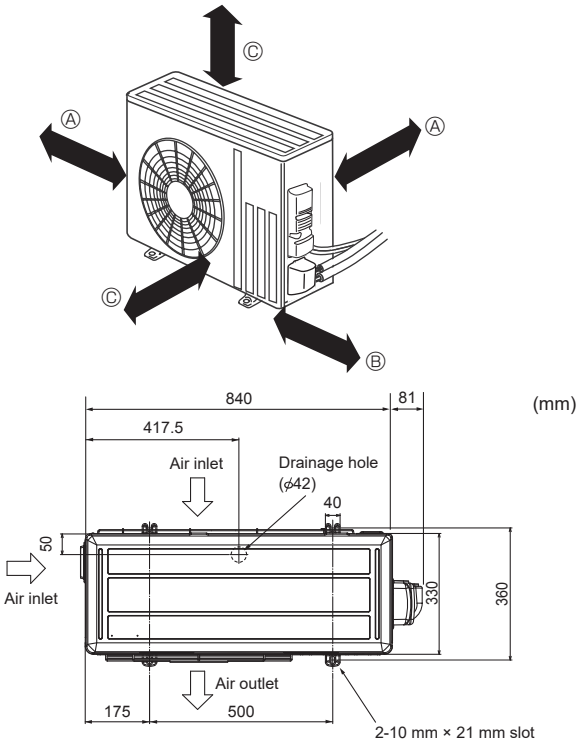


**Fig. 2-1**

### 2.1. Outdoor unit (Fig. 2-1)

**Ventilation and service space**

Ⓐ 100 mm or more
Ⓑ 350 mm or more
Ⓒ 500 mm or more

When the piping is to be attached to a wall containing metals (tin plated) or metal netting, use a chemically treated wooden piece 20 mm or thicker between the wall and the piping or wrap 7 to 8 turns of insulation vinyl tape around the piping.

| |
|---|
| Units should be installed by licensed contractor accordingly to local code requirement. |

**Note:**
**When operating the air to water heat pump in low outside temperature, be sure to follow the instructions described below.**

- Never install the outdoor unit in a place where its air inlet/outlet side may be exposed directly to wind.
- To prevent exposure to wind, install the outdoor unit with its air inlet side facing the wall.
- To prevent exposure to wind, it is recommended to install a baffle board on the air outlet side of the outdoor unit.

■ SUZ-SWM30VA SUZ-SWM40VA2 SUZ-SWM60VA2 SUZ-SHWM30VAH SUZ-SHWM40VAH
SUZ-SWM80VA2 SUZ-SWM80VAH2 SUZ-SWM100VA SUZ-SWM100VAH SUZ-SHWM60VAH

## 1. Selecting the installation location

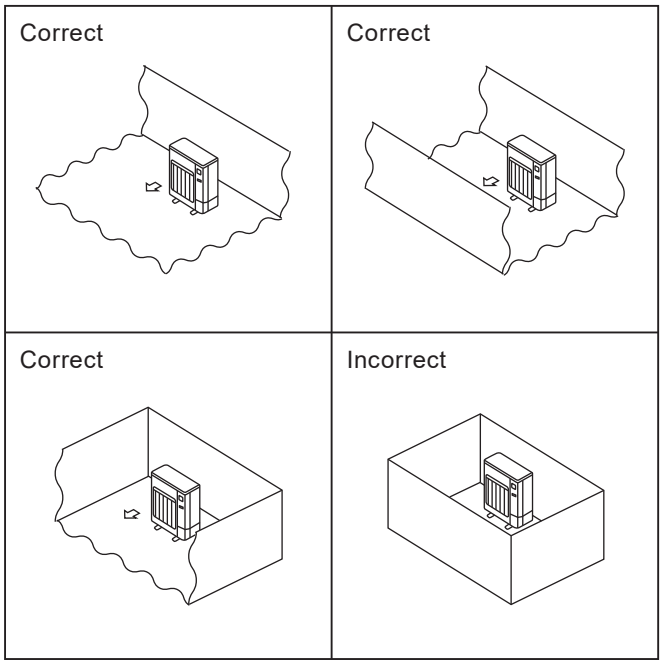


Fig. 1-1

### 1.1. Outdoor unit

- R32 is heavier than air—as well as other refrigerants—so tends to accumulate at the base (in the vicinity of the floor). If R32 accumulates around base, it may reach a flammable concentration in case room is small. To avoid ignition, maintaining a safe work environment is required by ensuring appropriate ventilation. If a refrigerant leak is confirmed in a room or an area where there is insufficient ventilation, refrain from using of flames until the work environment can be improved by ensuring appropriate ventilation.
- Where it is not exposed to strong wind.
- Where airflow is good and dustless.
- Where it is not causing the air short cycle.
- Where neighbours are not annoyed by operation sound or hot air.
- Where rigid wall or support is available to prevent the increase of operation sound or vibration.
- Where there is no risk of combustible gas leakage.
- When installing the unit at a high level, be sure to fix the unit legs.
- Where it is at least 3 m away from the antenna of TV set or radio. (Otherwise, images would be disturbed or noise would be generated.)
- Please install it in an area not affected by snowfall or blowing snow. In areas with heavy snow, please install a canopy, a pedestal and/or some baffle boards.
- Install the unit horizontally.
- Refrigerant pipes connection shall be accessible for maintenance purposes.

◎ Install outdoor units in a place where at least one of the four sides is open, and in a sufficiently large space without depressions. (Fig. 1-1)

⚠ **Caution:**

**Avoid the following places for installation where air to water heat pump trouble is liable to occur.**

- **Where there is too much machine oil.**
- **Salty environment as seaside areas.**
- **Hot-spring areas.**
- **Where sulfide gas exists.**
- **Other special atmospheric areas.**

**The outdoor unit produces condensate during the heating operation. Select the installation place to ensure to prevent the outdoor unit and/or the grounds from being wet by drain water or damaged by frozen drain water.**

### ◎1.2. Minimum installation area

If you unavoidably install a unit in a space where all four sides are blocked or there are depressions, confirm that one of these situations (A, B or C) is satisfied.

**Note: These countermeasures are for keeping safety not for specification guarantee.**

A) Secure sufficient installation space (minimum installation area Amin).
Install in a space with an installation area of Amin or more, corresponding to refrigerant quantity M (factory-charged refrigerant + locally added refrigerant).

| M [kg] | Amin [m²] |
|---|---|
| 1.0 | 12 |
| 1.5 | 17 |
| 2.0 | 23 |
| 2.5 | 28 |
| 3.0 | 34 |
| 3.5 | 39 |
| 4.0 | 45 |
| 4.5 | 50 |
| 5.0 | 56 |
| 5.5 | 62 |
| 6.0 | 67 |
| 6.5 | 73 |
| 7.0 | 78 |
| 7.5 | 84 |

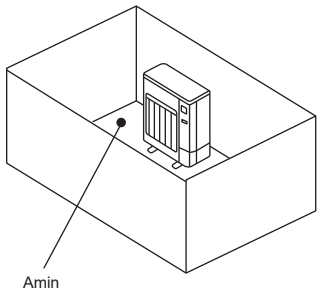


B) Install in a space with a depression height of ≤ 0.125 [m].

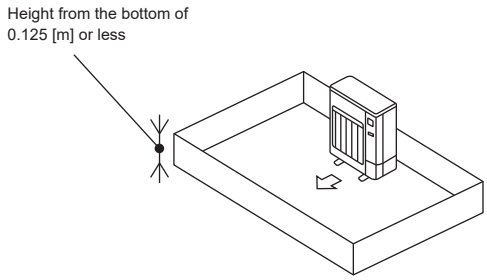


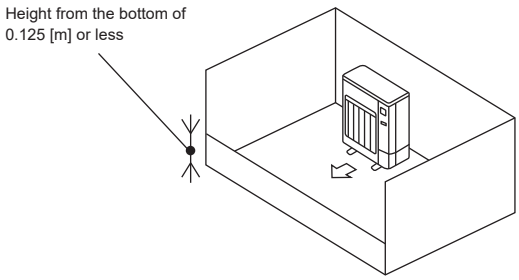

C) Create an appropriate ventilation open area.
Make sure that the width of the open area is 0.9 [m] or more and the height of the open area is 0.15 [m] or more.
However, the height from the bottom of the installation space to the bottom edge of the open area should be 0.125 [m] or less.
Open area should be 75% or more opening.

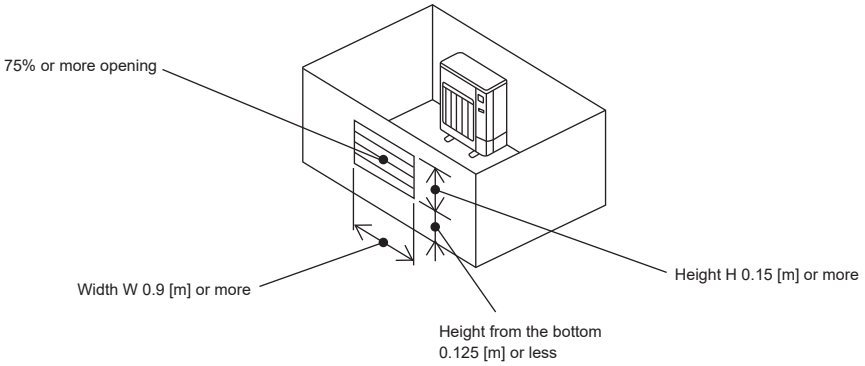


**Note:**
**About the indoor unit, there are no installation restrictions due to the use of R32 refrigerant.**
**Please refer to the indoor unit installation manual and check the required installation area.**

## 2. Installation diagram

### 2.1. Outdoor unit (Fig. 2-1)

**Ventilation and service space**

Ⓐ 100 mm or more
Ⓑ 350 mm or more
Ⓒ 500 mm or more

When the piping is to be attached to a wall containing metals (tin plated) or metal netting, use a chemically treated wooden piece 20 mm or thicker between the wall and the piping or wrap 7 to 8 turns of insulation vinyl tape around the piping.

Units should be installed by licensed contractor accordingly to local code requirement.

**Note:**
**When operating the air to water heat pump in low outside temperature, be sure to follow the instructions described below.**

- Never install the outdoor unit in a place where its air inlet/outlet side may be exposed directly to wind.
- To prevent exposure to wind, install the outdoor unit with its air inlet side facing the wall.
- To prevent exposure to wind, it is recommended to install a baffle board on the air outlet side of the outdoor unit.

■ **SUZ-SWM80VA2, SUZ-SWM80VAH2, SUZ-SWM100VA, SUZ-SWM100VAH, SUZ-SHWM60VAH**

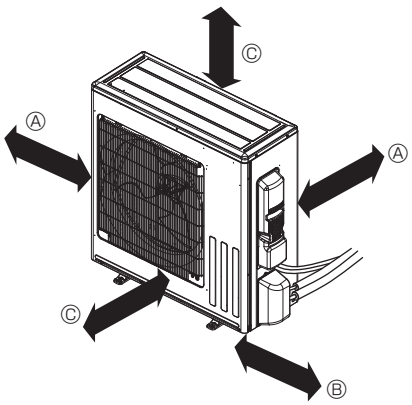


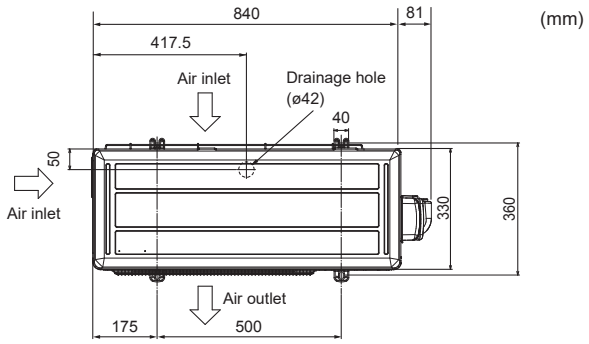


■ **SUZ-SWM30VA, SUZ-SWM40VA2, SUZ-SWM60VA2, SUZ-SHWM30VAH, SUZ-SHWM40VAH**

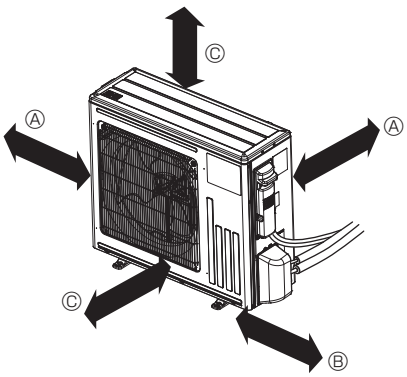


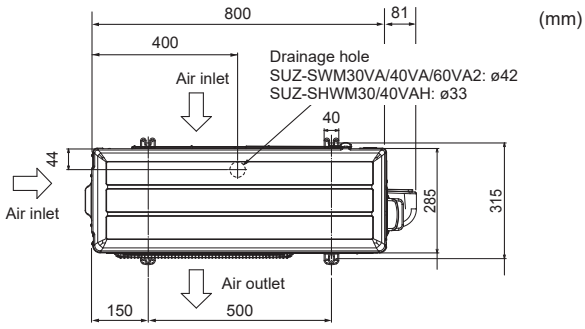

■ PUZ-SWM60VAA PUZ-SWM80VAA PUZ-SWM80YAA PUZ-SWM100VAA PUZ-SWM100YAA
PUZ-SHWM60VAA2 PUZ-SHWM80VAA PUZ-SHWM80YAA PUZ-SHWM100VAA PUZ-SHWM100YAA
PUZ-SWM120VAA PUZ-SWM120YAA PUZ-SWM140VAA PUZ-SWM140YAA
PUZ-SHWM120VAA PUZ-SHWM120YAA PUZ-SHWM140VAA PUZ-SHWM140YAA

## 1. Selecting the installation location

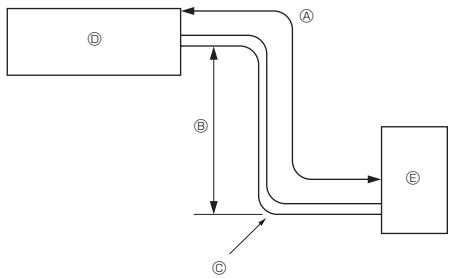


Fig. 2-1

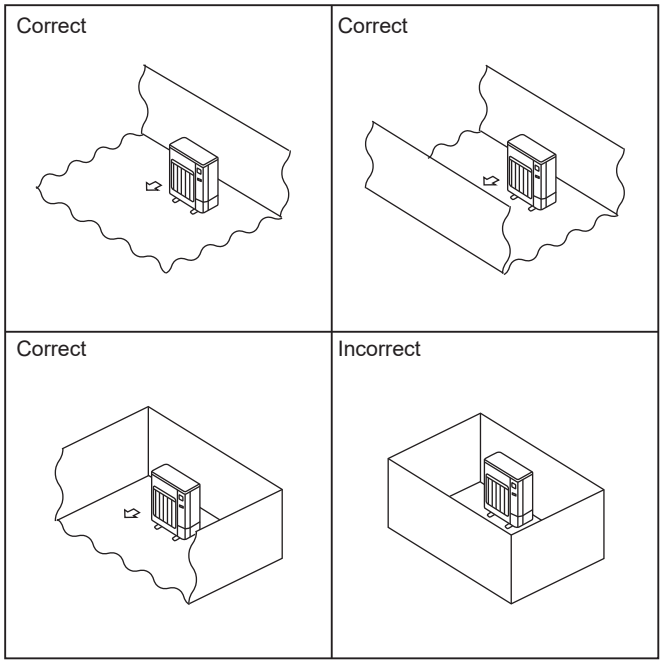


Fig. 2-2

**2.1. Refrigerant pipe (Fig. 2-1)**

► **Check that the difference between the heights of the indoor and outdoor units, the length of refrigerant pipe, and the number of bends in the pipe are within the limits shown below.**

| Model | Ⓐ Pipe length (one way) | Ⓑ Height difference | Ⓒ Number of bends (one way) |
|---|---|---|---|
| S(H)WM60/80/100 | 2 m - 50 m | Max. 30 m | Max. 10 |
| S(H)WM120/140 | 2 m - 30 m *1 | Max. 30 m | Max. 10 |

*1 Only when the unit operates in heating, the pipe length available to use is 2 m - 50 m. Refer to section 4.

- Height difference limitation is defined regardless of which unit, indoor or outdoor, is positioned higher.
  Ⓓ Indoor unit
  Ⓔ Outdoor unit

The insulation materials should be satisfied the following SPECs.
- Heat transfer rate: 0.040 W/mK or less
- Insulation thickness: 9 mm or more
- Heat resistance: 110°C or more

If the piping length in the outside is over 15 m, the insulation thickness should be 18 mm or more.

**2.2. Choosing the outdoor unit installation location**

◎R32 is heavier than air—as well as other refrigerants—so tends to accumulate at the base (in the vicinity of the floor). If R32 accumulates around base, it may reach a flammable concentration in case room is small. To avoid ignition, maintaining a safe work environment is required by ensuring appropriate ventilation. If a refrigerant leak is confirmed in a room or an area where there is insufficient ventilation, refrain from using of flames until the work environment can be improved by ensuring appropriate ventilation.
- Avoid locations exposed to direct sunlight or other sources of heat.
- Select a location from which noise emitted by the unit will not inconvenience neighbors.
- Select a location permitting easy wiring and pipe access to the power source and indoor unit.
- Avoid locations where combustible gases may leak, be produced, flow, or accumulate.
- Note that water may drain from the unit during operation.
- Select a level location that can bear the weight and vibration of the unit.
- Avoid locations where the unit can be covered by snow. In areas where heavy snow fall is anticipated, special precautions such as raising the installation location or installing a hood on the air intake must be taken to prevent the snow from blocking the air intake or blowing directly against it. This can reduce the airflow and a malfunction may result.
- Avoid locations exposed to oil, steam, or sulfuric gas.
- Use the transportation handles of the outdoor unit to transport the unit. If the unit is carried from the bottom, hands or fingers may be pinched.
- Refrigerant pipes connection shall be accessible for maintenance purposes.

◎Install outdoor units in a place where at least one of the four sides is open, and in a sufficiently large space without depressions. (Fig. 2-2)

⚠ **CAUTION:**
- **Perform grounding.**
  **Do not connect the ground wire to a gas pipe, water pipe arrester or telephone ground wire. Defective grounding could cause an electric shock.**
- **Do not install the unit in a place where an inflammable gas leaks.**
  **If gas leaks and accumulates in the area surrounding the unit, it could cause an explosion.**
- **Install a ground leakage breaker depending on the installation place (where it is humid).**
  **If a ground leakage breaker is not installed, it could cause an electric shock.**
- **Perform the drainage/piping work securely according to the installation manual.**
  **If there is a defect in the drainage/piping work, water could drop from the unit and household goods could be wet and damaged.**
- **Fasten a flare nut with a torque wrench as specified in this manual.**
  **When fastened too tight, a flare nut may be broken after a long period and cause a leakage of refrigerant.**

(mm)

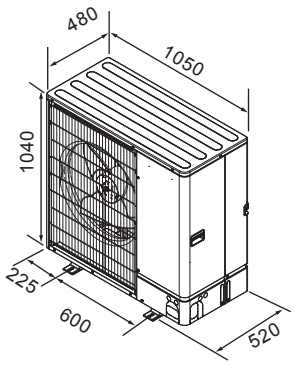


Fig. 2-3

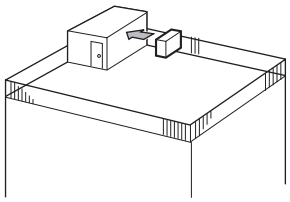

Fig. 2-4

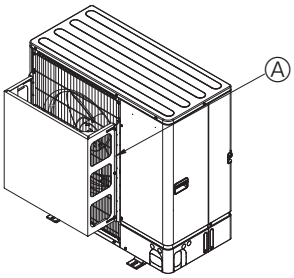


Fig. 2-5

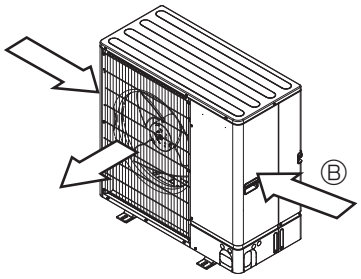


Fig. 2-6

**2.3. Outline dimensions (Outdoor unit) (Fig. 2-3)**

**2.4. Ventilation and service space**

**2.4.1. Windy location installation**

When installing the outdoor unit on a rooftop or other location unprotected from the wind, situate the air outlet of the unit so that it is not directly exposed to strong winds. Strong wind entering the air outlet may impede the normal airflow and a malfunction may result.

The following shows three examples of precautions against strong winds.

① Face the air outlet towards the nearest available wall about 35 cm away from the wall. (Fig. 2-4)

② Install an optional air guide if the unit is installed in a location where strong winds from a typhoon, etc. may directly enter the air outlet. (Fig. 2-5)
Ⓐ Air outlet guide

③ Position the unit so that the air outlet blows perpendicularly to the seasonal wind direction, if possible. (Fig. 2-6)
Ⓑ Wind direction

**2.4.2. When installing a single outdoor unit (Refer to the last page)**

Minimum dimensions are as follows, except for Max., meaning Maximum dimensions, indicated.

Refer to the figures for each case.

① Obstacles at rear only (Fig. 2-7)

② Obstacles at rear and above only (Fig. 2-8)
- Do not install the optional air outlet guides for upward airflow.

③ Obstacles at rear and sides only (Fig. 2-9)

④ Obstacles at front only (Fig. 2-10)

⑤ Obstacles at front and rear only (Fig. 2-11)

⑥ Obstacles at rear, sides, and above only (Fig. 2-12)
- Do not install the optional air outlet guides for upward airflow.

**2.4.3. When installing multiple outdoor units (Refer to the last page)**

Leave 50 mm space or more between the units.

Refer to the figures for each case.

① Obstacles at rear only (Fig. 2-13)

② Obstacles at rear and above only (Fig. 2-14)
- No more than 3 units must be installed side by side. In addition, leave space as shown.
- Do not install the optional air outlet guides for upward airflow.

③ Obstacles at front only (Fig. 2-15)

④ Obstacles at front and rear only (Fig. 2-16)

⑤ Single parallel unit arrangement (Fig. 2-17)
* When using an optional air outlet guide installed for upward airflow, the clearance is 500 mm or more.

⑥ Multiple parallel unit arrangement (Fig. 2-18)
* When using an optional air outlet guide installed for upward airflow, the clearance is 1000 mm or more.

⑦ Stacked unit arrangement (Fig. 2-19)
- The units can be stacked up to two units high.
- No more than 2 stacked units must be installed side by side. In addition, leave space as shown.

**◎2.5. Minimum installation area**

If you unavoidably install a unit in a space where all four sides are blocked or there are depressions, confirm that one of these situations (A, B or C) is satisfied.

**Note: These countermeasures are for keeping safety not for specification guarantee.**

A) Secure sufficient installation space (minimum installation area Amin).
Install in a space with an installation area of Amin or more, corresponding to refrigerant quantity M (factory-charged refrigerant + locally added refrigerant).

| M [kg] | Amin [m²] |
|---|---|
| 1.0 | 12 |
| 1.5 | 17 |
| 2.0 | 23 |
| 2.5 | 28 |
| 3.0 | 34 |
| 3.5 | 39 |
| 4.0 | 45 |
| 4.5 | 50 |
| 5.0 | 56 |
| 5.5 | 62 |
| 6.0 | 67 |
| 6.5 | 73 |
| 7.0 | 78 |
| 7.5 | 84 |

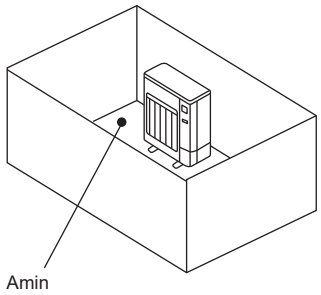


B) Install in a space with a depression height of ≦ 0.125 [m].

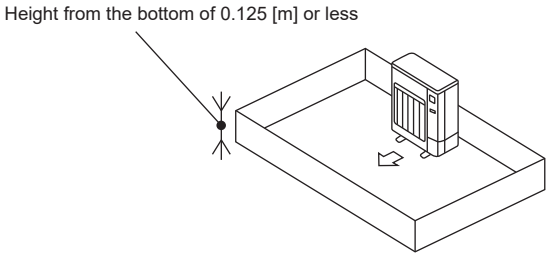


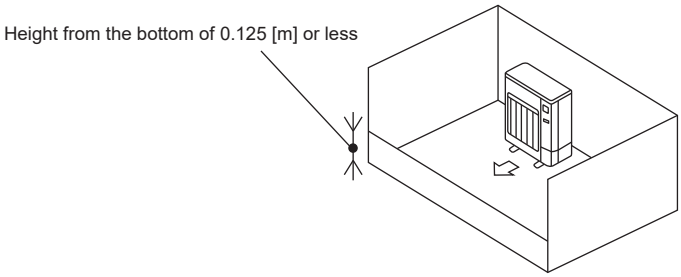


C) Create an appropriate ventilation open area.
Make sure that the width of the open area is 0.9 [m] or more and the height of the open area is 0.15 [m] or more.
However, the height from the bottom of the installation space to the bottom edge of the open area should be 0.125 [m] or less.
Open area should be 75% or more opening.

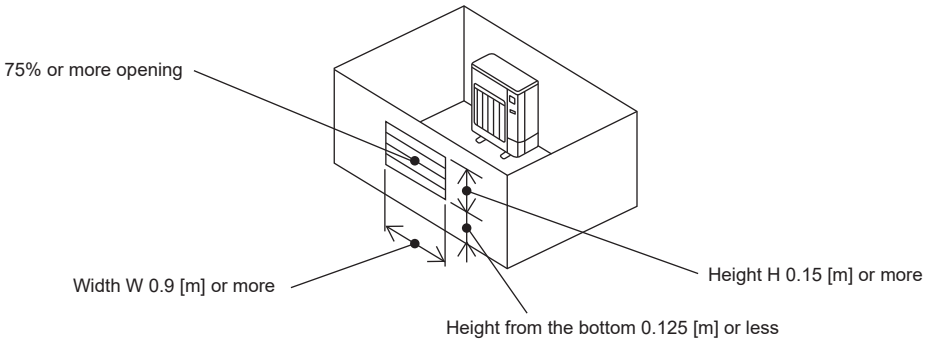

## 2. Installation diagram

(mm)

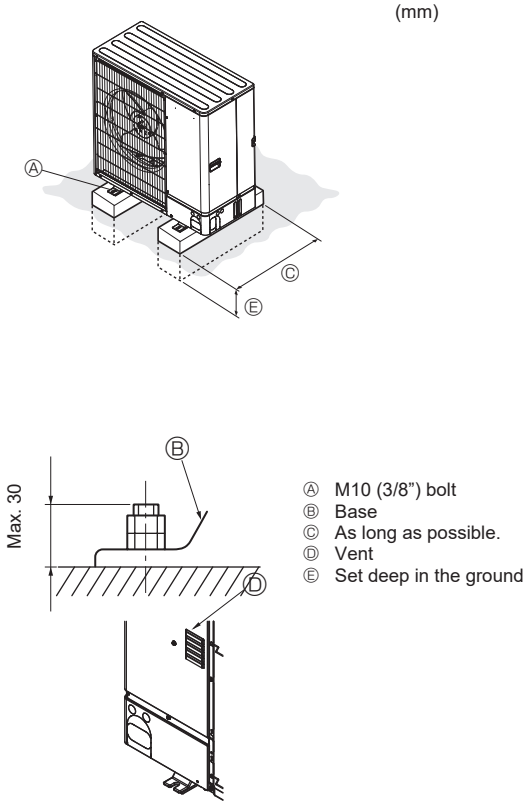


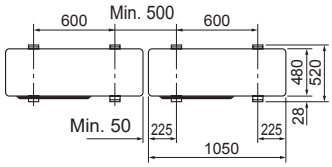


**Fig. 3-1**

- Be sure to install the unit in a sturdy, level surface to prevent rattling noises during operation. (Fig. 3-1)

<Foundation specifications>

| | |
|---|---|
| Foundation bolt | M10 (3/8") |
| Thickness of concrete | 120 mm |
| Length of bolt | 70 mm |
| Weight-bearing capacity | 320 kg |

- Make sure that the length of the foundation bolt is within 30 mm of the bottom surface of the base.
- Secure the base of the unit firmly with four-M10 foundation bolts in sturdy locations.

**Installing the outdoor unit**

- Do not block the vent. If the vent is blocked, operation will be hindered and breakdown may result.
- In addition to the unit base, use the installation holes on the back of the unit to attach wires, etc., if necessary to install the unit. Use self-tapping screws (ø5 × 15 mm or less) and install on site.

⚠ **WARNING:**

- **The unit must be securely installed on a structure that can sustain its weight. If the unit is mounted on an unstable structure, it may fall down and cause damage or injuries.**
- **The unit must be installed according to the instructions in order to minimize the risk of damage from earthquakes, typhoons, or strong winds. An incorrectly installed unit may fall down and cause damage or injuries.**

⚠ **CAUTION:**

- **Install be unit on a rigid structure to prevent excessive operation sound or vibration.**

■ PUD-SWM60VAA(-BS) PUD-SWM80VAA(-BS) PUD-SWM80YAA(-BS) PUD-SWM100VAA(-BS)
PUD-SWM100YAA(-BS) PUD-SWM120VAA(-BS) PUD-SWM120YAA(-BS) PUD-SHWM60VAA(-BS)
PUD-SHWM80VAA(-BS) PUD-SHWM80YAA(-BS) PUD-SHWM100VAA(-BS) PUD-SHWM100YAA(-BS)
PUD-SHWM120VAA(-BS) PUD-SHWM120YAA(-BS) PUD-SHWM140VAA(-BS) PUD-SHWM140YAA(-BS)

## 1. Selecting the installation location

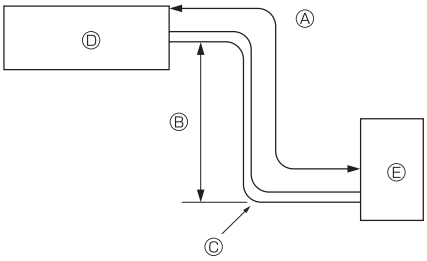


Fig. 1-1

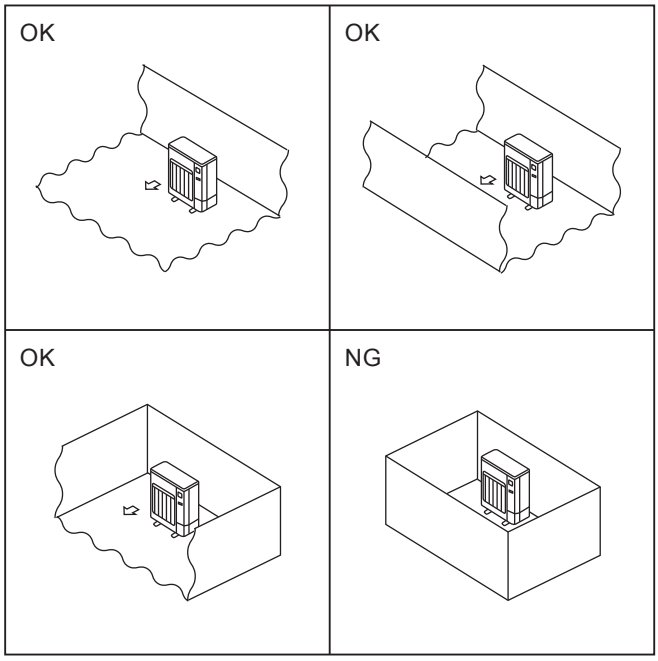


Fig. 1-2

### 1.1. Refrigerant pipe (Fig. 1-1)

► **Check that the difference between the heights of the indoor and outdoor units, the length of refrigerant pipe, and the number of bends in the pipe are within the limits shown below.**

| Model | Ⓐ Pipe length (one way) | Ⓑ Height difference | Ⓒ Number of bends (one way) |
|---|---|---|---|
| SWM60 - 120 | 2 m - 30 m | Max. 30 m | Max. 10 |
| SHWM60 - 120 | 2 m - 30 m | Max. 30 m | Max. 10 |
| SHWM140 | 2 m - 25 m | Max. 25 m | Max. 10 |

- Height difference limitation is defined regardless of which unit, indoor or outdoor, is positioned higher.
  Ⓓ Indoor unit
  Ⓔ Outdoor unit

### 1.2. Choosing the outdoor unit installation location

- R32 is heavier than air—as well as other refrigerants—so tends to accumulate at the base (in the vicinity of the floor). If R32 accumulates around base, it may reach a flammable concentration in case room is small. To avoid ignition, maintaining a safe work environment is required by ensuring appropriate ventilation. If a refrigerant leak is confirmed in a room or an area where there is insufficient ventilation, refrain from using of flames until the work environment can be improved by ensuring appropriate ventilation.
- Avoid locations exposed to direct sunlight or other sources of heat.
- Select a location from which noise emitted by the unit will not inconvenience neighbors.
- Select a location permitting easy wiring and pipe access to the power source and indoor unit.
- Avoid locations where combustible gases may leak, be produced, flow, or accumulate.
- Note that water may drain from the unit during operation.
- Select a level location that can bear the weight and vibration of the unit.
- Avoid locations where the unit can be covered by snow. In areas where heavy snow fall is anticipated, special precautions such as raising the installation location or installing a hood on the air intake must be taken to prevent the snow from blocking the air intake or blowing directly against it. This can reduce the airflow and a malfunction may result.
- Avoid locations exposed to oil, steam, or sulfuric gas.
- Use the transportation handles of the outdoor unit to transport the unit. If the unit is carried from the bottom, hands or fingers may be pinched.
- Refrigerant pipes connection shall be accessible for maintenance purposes.

◎ Install outdoor units in a place where at least one of the four sides is open, and in a sufficiently large space without depressions. (Fig. 1-2)

⚠ **CAUTION:**

- **Perform grounding.**
  **Do not connect the ground wire to a gas pipe, water pipe arrester or telephone ground wire. Defective grounding could cause an electric shock.**
- **Do not install the unit in a place where an inflammable gas leaks.**
  **If gas leaks and accumulates in the area surrounding the unit, it could cause an explosion.**
- **Install a ground leakage breaker depending on the installation place (where it is humid).**
  **If a ground leakage breaker is not installed, it could cause an electric shock.**
- **Perform the drainage/piping work securely according to the installation manual.**
  **If there is a defect in the drainage/piping work, water could drop from the unit and household goods could be wet and damaged.**
- **Fasten a flare nut with a torque wrench as specified in this manual.**
  **When fastened too tight, a flare nut may be broken after a long period and cause a leakage of refrigerant.**

(mm)

## 1.3. Outline dimensions (Outdoor unit) (Fig. 1-3)

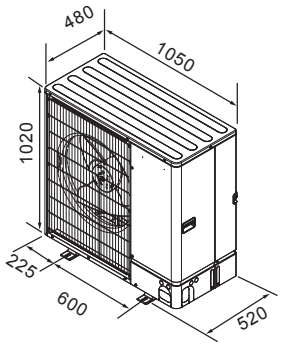


Fig. 1-3

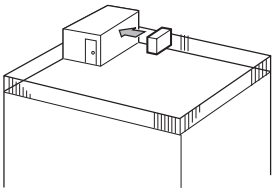

Fig. 1-4

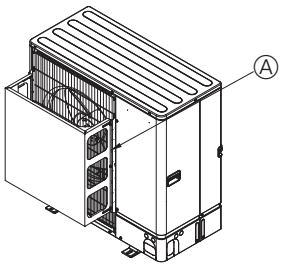


Fig. 1-5

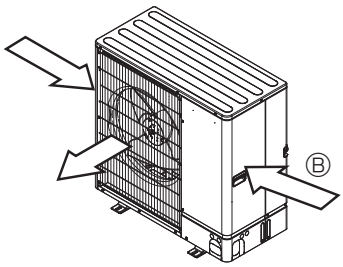


Fig. 1-6

## 1.4. Ventilation and service space

### 1.4.1. Windy location installation

When installing the outdoor unit on a rooftop or other location unprotected from the wind, situate the air outlet of the unit so that it is not directly exposed to strong winds. Strong wind entering the air outlet may impede the normal airflow and a malfunction may result.

The following shows three examples of precautions against strong winds.

① Face the air outlet towards the nearest available wall about 35 cm away from the wall. (Fig. 1-4)

② Install an optional air guide if the unit is installed in a location where strong winds from a typhoon, etc. may directly enter the air outlet. (Fig. 1-5)

Ⓐ Air outlet guide

③ Position the unit so that the air outlet blows perpendicularly to the seasonal wind direction, if possible. (Fig. 1-6)

Ⓑ Wind direction

### 1.4.2. When installing a single outdoor unit (Refer to the last page)

Minimum dimensions are as follows, except for Max., meaning Maximum dimensions, indicated.

Refer to the figures for each case.

① Obstacles at rear only (Fig. 1-7)

② Obstacles at rear and above only (Fig. 1-8)

- Do not install the optional air outlet guides for upward airflow.

③ Obstacles at rear and sides only (Fig. 1-9)

④ Obstacles at front only (Fig. 1-10)

⑤ Obstacles at front and rear only (Fig. 1-11)

⑥ Obstacles at rear, sides, and above only (Fig. 1-12)

- Do not install the optional air outlet guides for upward airflow.

### 1.4.3. When installing multiple outdoor units (Refer to the last page)

Leave 50 mm space or more between the units.

Refer to the figures for each case.

① Obstacles at rear only (Fig. 1-13)

② Obstacles at rear and above only (Fig. 1-14)

- No more than 3 units must be installed side by side. In addition, leave space as shown.
- Do not install the optional air outlet guides for upward airflow.

③ Obstacles at front only (Fig. 1-15)

④ Obstacles at front and rear only (Fig. 1-16)

⑤ Single parallel unit arrangement (Fig. 1-17)

* When using an optional air outlet guide installed for upward airflow, the clearance is 500 mm or more.

⑥ Multiple parallel unit arrangement (Fig. 1-18)

* When using an optional air outlet guide installed for upward airflow, the clearance is 1000 mm or more.

⑦ Stacked unit arrangement (Fig. 1-19)

- The units can be stacked up to two units high.
- No more than 2 stacked units must be installed side by side. In addition, leave space as shown.

## ◎1.5. Minimum installation area

If you unavoidably install a unit in a space where all four sides are blocked or there are depressions, confirm that one of these situations (A, B or C) is satisfied.

**Note: These countermeasures are for keeping safety not for specification guarantee.**

A) Secure sufficient installation space (minimum installation area Amin).
Install in a space with an installation area of Amin or more, corresponding to refrigerant quantity M (factory-charged refrigerant + locally added refrigerant).

| M [kg] | Amin [m²] |
|---|---|
| 1.0 | 12 |
| 1.5 | 17 |
| 2.0 | 23 |
| 2.5 | 28 |
| 3.0 | 34 |
| 3.5 | 39 |
| 4.0 | 45 |
| 4.5 | 50 |
| 5.0 | 56 |
| 5.5 | 62 |
| 6.0 | 67 |
| 6.5 | 73 |
| 7.0 | 78 |
| 7.5 | 84 |

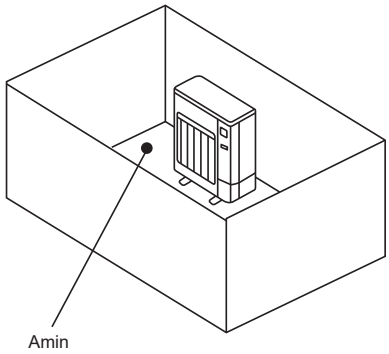


B) Install in a space with a depression height of ≤ 0.125 [m].

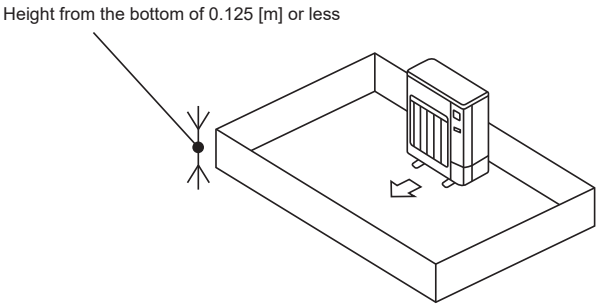


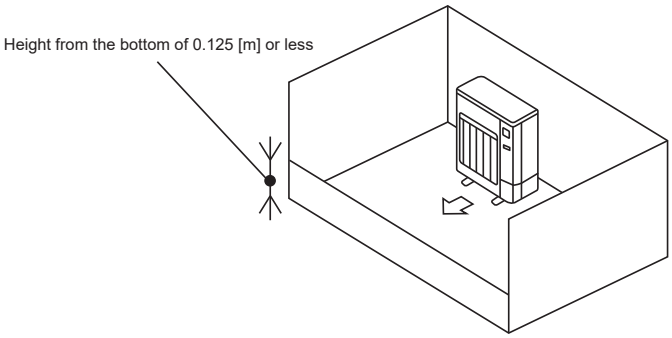


C) Create an appropriate ventilation open area.
Make sure that the width of the open area is 0.9 [m] or more and the height of the open area is 0.15 [m] or more.
However, the height from the bottom of the installation space to the bottom edge of the open area should be 0.125 [m] or less.
Open area should be 75% or more opening.

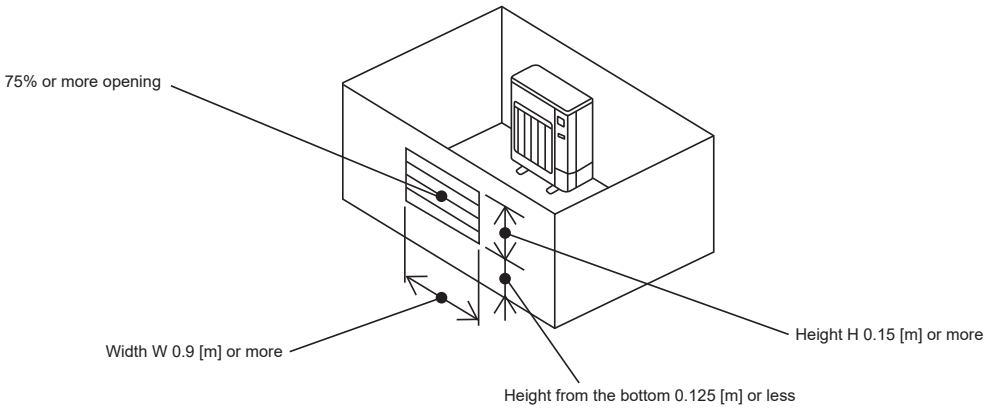

UNIT : mm

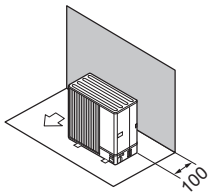


Fig. 1-7

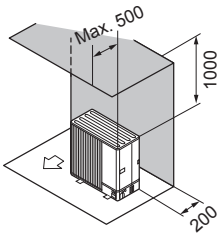


Fig. 1-8

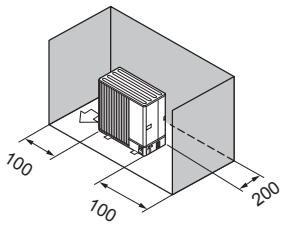


Fig. 1-9

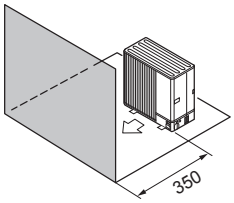


Fig. 1-10

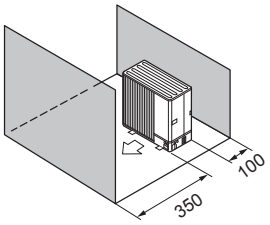


Fig. 1-11

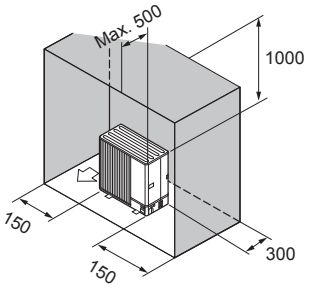


Fig. 1-12

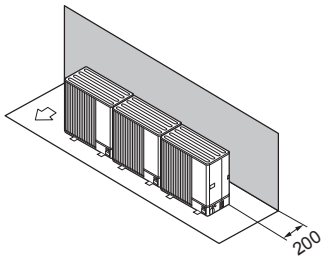


Fig. 1-13

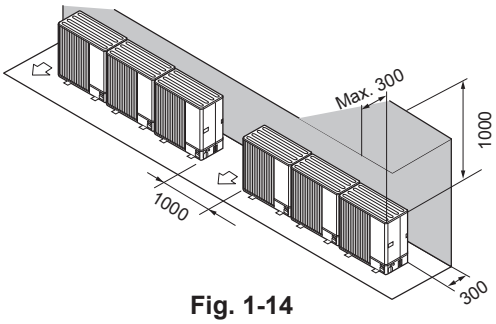


Fig. 1-14

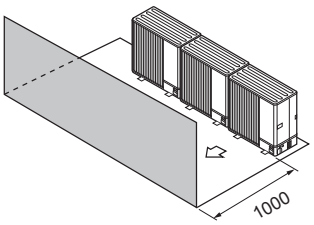


Fig. 1-15

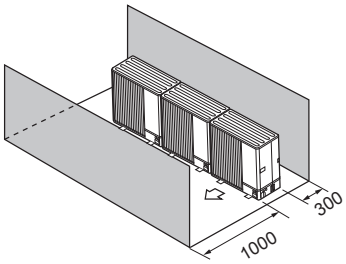


Fig. 1-16

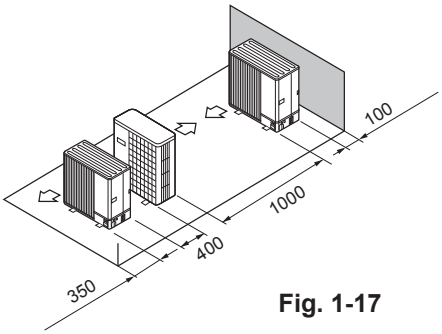


Fig. 1-17

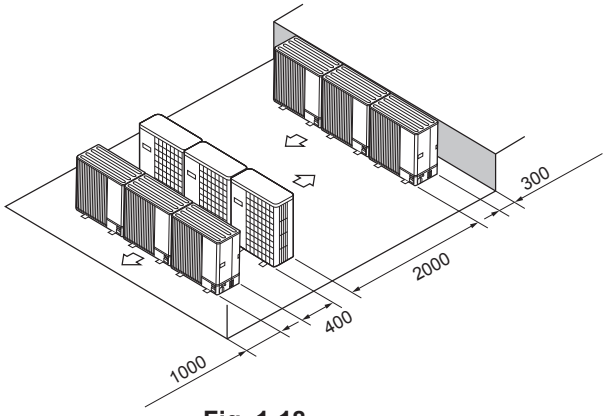


Fig. 1-18

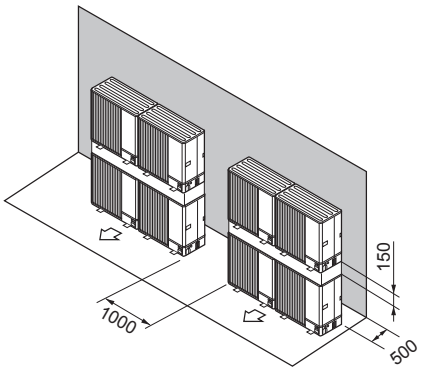


Fig. 1-19

## 2. Installation diagram

(mm)

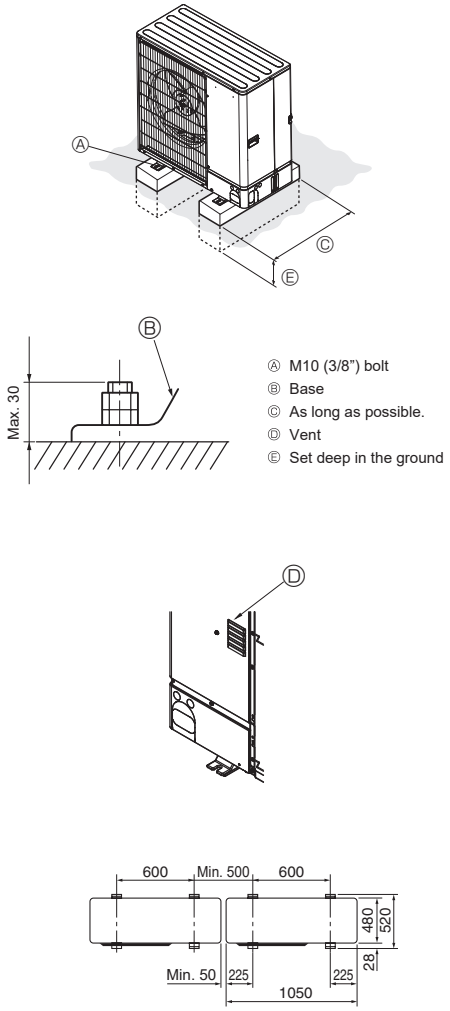


**Fig. 2-1**

- Be sure to install the unit in a sturdy, level surface to prevent rattling noises during operation. (Fig. 2-1)

<Foundation specifications>

| | |
|---|---|
| Foundation bolt | M10 (3/8") |
| Thickness of concrete | 120 mm |
| Length of bolt | 70 mm |
| Weight-bearing capacity | 320 kg |

- Make sure that the length of the foundation bolt is within 30 mm of the bottom surface of the base.
- Secure the base of the unit firmly with four-M10 foundation bolts in sturdy locations.

**Installing the outdoor unit**

- Do not block the vent. If the vent is blocked, operation will be hindered and breakdown may result.
- In addition to the unit base, use the installation holes on the back of the unit to attach wires, etc., if necessary to install the unit. Use self-tapping screws (ø5 × 15 mm or less) and install on site.

⚠ **WARNING:**

- **The unit must be securely installed on a structure that can sustain its weight. If the unit is mounted on an unstable structure, it may fall down and cause damage or injuries.**
- **The unit must be installed according to the instructions in order to minimize the risk of damage from earthquakes, typhoons, or strong winds. An incorrectly installed unit may fall down and cause damage or injuries.**

⚠ **CAUTION:**

- **Install be unit on a rigid structure to prevent excessive operation sound or vibration.**

MEMO

# Contents


**1 Combination table .....B-3**

**2 Specifications .....B-7**

2.1. Cylinder unit ..... B-7
2.2. Hydrobox..... B-17
2.3. Ground source heat pump (GSHP)..... B-23
2.4. Water to Water Heat Pump (WTW)..... B-24

**3 Performance data .....B-25**

3.1. Combination Performance ..... B-25
3.2. Heat time data (DHW mode)..... B-39
3.3. Ground source heat pump (GSHP)..... B-40
3.4. Water to Water Heat Pump (WTW)..... B-41
3.5. Noise criterion curves ..... B-42

**4 Cylinder unit.....B-44**

4.1. Outlines and dimensions..... B-44
4.2. Wiring diagrams ..... B-49
4.3. Dip switch functions ..... B-57
4.4. Field wiring..... B-58
4.5. Water circuit diagrams ..... B-68
4.6. Installation..... B-75
4.7. System Set Up ..... B-83
4.8. Service and Maintenance ..... B-99

**5 Hydrobox ..... B-111**

5.1. Outlines and dimensions.....B-111
5.2. Wiring diagrams .....B-116
5.3. Dip switch functions ..... B-121
5.4. Field wiring..... B-122
5.5. Water circuit diagrams ..... B-129
5.6. Installation..... B-132
5.7. System Set Up ..... B-139
5.8. Service and Maintenance ..... B-155

**6 Ground source heat pump (GSHP) .....B-165**

6.1. Outlines and dimensions..... B-165
6.2. Wiring diagrams ..... B-167
6.3. Dip switch functions ..... B-168
6.4. Field wiring..... B-169
6.5. Water circuit diagrams ..... B-176
6.6. Installation..... B-179
6.7. System Set Up ..... B-186
6.8. Service and Maintenance ..... B-208
6.9. Supplementary information ..... B-220

# Contents


## 7 Water to Water Heat Pump (WTW) .....B-221

7.1. Outlines and dimensions..... B-221
7.2. Wiring diagrams ..... B-223
7.3. DIP Switch Function(FTC) ..... B-224
7.4. Field wiring..... B-225
7.5. Water circuit diagrams ..... B-233
7.6. Installation..... B-237
7.7 System Set Up ..... B-246
7.8 Service and Maintenance ..... B-268
7.9. Supplementary information ..... B-280

# 1 Combination table

| Split indoor/outdoor unit combination | | R32 | | | | | | | | | | | | | | | | | | | | | | | | | | | | | | | | | R410A | | | | |
|---|---|---|---|---|---|---|---|---|---|---|---|---|---|---|---|---|---|---|---|---|---|---|---|---|---|---|---|---|---|---|---|---|---|---|---|---|---|---|---|
| | | Eco Inverter | | | | | | | | | | | | | POWER INVERTER | | | | | | | | | ZUBADAN | | | | | | | | | | POWER INVERTER | | | | |
| | | SUZ-SWM40VA | SUZ-SWM60VA | SUZ-SWM80VA | SUZ-SWM30VA | SUZ-SHWM30VAH | SUZ-SWM40VA2(-SC) | SUZ-SHWM40VAH(-SC) | SUZ-SWM60VA2(-SC) | SUZ-SHWM60VAH(SC) | SUZ-SWM80VA2 | SUZ-SWM80VAH2 | SUZ-SWM100VA | SUZ-SWM100VAH | PUZ-SWM60VAA | PUZ-SWM80V/YAA | PUZ-SWM100V/YAA | PUZ-SWM120V/YAA | PUZ-SWM140V/YAA | PUD-SWM60VAA | PUD-SWM80V/YAA | PUD-SWM100V/YAA | PUD-SWM120V/YAA | PUZ-SHWM60VAA | PUZ-SHWM80V/YAA | PUZ-SHWM100V/YAA | PUZ-SHWM120V/YAA | PUZ-SHWM140V/YAA | PUD-SHWM60VAA | PUD-SHWM80V/YAA | PUD-SHWM100V/YAA | PUD-SHWM120V/YAA | PUD-SHWM140V/YAA | PUHZ-SW75V/YAA | PUHZ-SW100V/YAA | PUHZ-SW120V/YHA | PUHZ-SW160YKA | PUHZ-SW200YKA |
| Heating only Cylinder | EHST17D-VM2D | ● | ● | ● | ● | ● | ● | ● | ● | ● | ● | ● | ● | ● | ● | ● | | | | ● | ● | | | ● | ● | | | | ● | ● | | | | ● | | | | |
| | EHST17D-YM9D | ● | ● | ● | ● | ● | ● | ● | ● | ● | ● | ● | ● | ● | ● | ● | | | | ● | ● | | | ● | ● | | | | ● | ● | | | | ● | | | | |
| | EHST20D-MED | ● | ● | ● | ● | ● | ● | ● | ● | ● | ● | ● | ● | ● | ● | ● | ● | ● | ● | ● | ● | ● | ● | ● | ● | ● | ● | ● | ● | ● | ● | ● | ● | ● | | | | |
| | EHST20D-VM2D | ● | ● | ● | ● | ● | ● | ● | ● | ● | ● | ● | ● | ● | ● | ● | ● | ● | ● | ● | ● | ● | ● | ● | ● | ● | ● | ● | ● | ● | ● | ● | ● | ● | | | | |
| | EHST20D-VM6D | ● | ● | ● | ● | ● | ● | ● | ● | ● | ● | ● | ● | ● | ● | ● | ● | ● | ● | ● | ● | ● | ● | ● | ● | ● | ● | ● | ● | ● | ● | ● | ● | ● | | | | |
| | EHST20D-YM9D | ● | ● | ● | ● | ● | ● | ● | ● | ● | ● | ● | ● | ● | ● | ● | ● | ● | ● | ● | ● | ● | ● | ● | ● | ● | ● | ● | ● | ● | ● | ● | ● | ● | | | | |
| | EHST20D-YM9ED | ● | ● | ● | ● | ● | ● | ● | ● | ● | ● | ● | ● | ● | ● | ● | ● | ● | ● | ● | ● | ● | ● | ● | ● | ● | ● | ● | ● | ● | ● | ● | ● | ● | | | | |
| | EHST20D-TM9D | ● | ● | ● | ● | ● | ● | ● | ● | ● | ● | ● | ● | ● | ● | ● | ● | ● | ● | ● | ● | ● | ● | ● | ● | ● | ● | ● | ● | ● | ● | ● | ● | ● | | | | |
| | EHST30D-MED | ● | ● | ● | ● | ● | ● | ● | ● | ● | ● | ● | ● | ● | ● | ● | ● | ● | ● | ● | ● | ● | ● | ● | ● | ● | ● | ● | ● | ● | ● | ● | ● | ● | | | | |
| | EHST30D-VM6ED | ● | ● | ● | ● | ● | ● | ● | ● | ● | ● | ● | ● | ● | ● | ● | ● | ● | ● | ● | ● | ● | ● | ● | ● | ● | ● | ● | ● | ● | ● | ● | ● | ● | | | | |
| | EHST30D-YM9ED | ● | ● | ● | ● | ● | ● | ● | ● | ● | ● | ● | ● | ● | ● | ● | ● | ● | ● | ● | ● | ● | ● | ● | ● | ● | ● | ● | ● | ● | ● | ● | ● | ● | | | | |
| | EHST30D-TM9ED | ● | ● | ● | ● | ● | ● | ● | ● | ● | ● | ● | ● | ● | ● | ● | ● | ● | ● | ● | ● | ● | ● | ● | ● | ● | ● | ● | ● | ● | ● | ● | ● | ● | | | | |
| | EHST20C-MED | | | | | | | | | | | | | | | | | | | | | | | | | | | | | | | | | | ● | ● | | |
| | EHST20C-VM2D | | | | | | | | | | | | | | | | | | | | | | | | | | | | | | | | | | ● | ● | | |
| | EHST20C-VM6D | | | | | | | | | | | | | | | | | | | | | | | | | | | | | | | | | | ● | ● | | |
| | EHST20C-YM9D | | | | | | | | | | | | | | | | | | | | | | | | | | | | | | | | | | ● | ● | | |
| | EHST20C-YM9ED | | | | | | | | | | | | | | | | | | | | | | | | | | | | | | | | | | ● | ● | | |
| | EHST20C-TM9D | | | | | | | | | | | | | | | | | | | | | | | | | | | | | | | | | | ● | ● | | |
| | EHST30C-MED | | | | | | | | | | | | | | | | | | | | | | | | | | | | | | | | | | ● | ● | | |
| | EHST30C-VM6ED | | | | | | | | | | | | | | | | | | | | | | | | | | | | | | | | | | ● | ● | | |
| | EHST30C-YM9ED | | | | | | | | | | | | | | | | | | | | | | | | | | | | | | | | | | ● | ● | | |
| | EHST30C-TM9ED | | | | | | | | | | | | | | | | | | | | | | | | | | | | | | | | | | ● | ● | | |
| Reversible Cylinder | ERST17D-VM2D | ● | ● | ● | ● | ● | ● | ● | ● | ● | ● | ● | ● | ● | ● | ● | | | | ▲ | ▲ | | | ● | ● | | | | ▲ | ▲ | | | | ● | | | | |
| | ERST17D-VM2BD | ● | ● | ● | ● | ● | ● | ● | ● | ● | ● | ● | ● | ● | ● | ● | | | | ▲ | ▲ | | | ● | ● | | | | ▲ | ▲ | | | | ● | | | | |
| | ERST17D-VM6D | ● | ● | ● | ● | ● | ● | ● | ● | ● | ● | ● | ● | ● | ● | ● | | | | ▲ | ▲ | | | ● | ● | | | | ▲ | ▲ | | | | ● | | | | |
| | ERST17D-VM6BD | ● | ● | ● | ● | ● | ● | ● | ● | ● | ● | ● | ● | ● | ● | ● | | | | ▲ | ▲ | | | ● | ● | | | | ▲ | ▲ | | | | ● | | | | |
| | ERST17D-YM9BD | ● | ● | ● | ● | ● | ● | ● | ● | ● | ● | ● | ● | ● | ● | ● | | | | ▲ | ▲ | | | ● | ● | | | | ▲ | ▲ | | | | ● | | | | |
| | ERST20D-VM2D | ● | ● | ● | ● | ● | ● | ● | ● | ● | ● | ● | ● | ● | ● | ● | ● | ● | ● | ▲ | ▲ | ▲ | ▲ | ● | ● | ● | ● | ● | ▲ | ▲ | ▲ | ▲ | ▲ | ● | | | | |
| | ERST20D-VM6D | ● | ● | ● | ● | ● | ● | ● | ● | ● | ● | ● | ● | ● | ● | ● | ● | ● | ● | ▲ | ▲ | ▲ | ▲ | ● | ● | ● | ● | ● | ▲ | ▲ | ▲ | ▲ | ▲ | ● | | | | |
| | ERST20D-YM9D | ● | ● | ● | ● | ● | ● | ● | ● | ● | ● | ● | ● | ● | ● | ● | ● | ● | ● | ▲ | ▲ | ▲ | ▲ | ● | ● | ● | ● | ● | ▲ | ▲ | ▲ | ▲ | ▲ | ● | | | | |
| | ERST30D-VM2ED | ● | ● | ● | ● | ● | ● | ● | ● | ● | ● | ● | ● | ● | ● | ● | ● | ● | ● | ▲ | ▲ | ▲ | ▲ | ● | ● | ● | ● | ● | ▲ | ▲ | ▲ | ▲ | ▲ | ● | | | | |
| | ERST30D-VM6ED | ● | ● | ● | ● | ● | ● | ● | ● | ● | ● | ● | ● | ● | ● | ● | ● | ● | ● | ▲ | ▲ | ▲ | ▲ | ● | ● | ● | ● | ● | ▲ | ▲ | ▲ | ▲ | ▲ | ● | | | | |
| | ERST30D-YM9ED | ● | ● | ● | ● | ● | ● | ● | ● | ● | ● | ● | ● | ● | ● | ● | ● | ● | ● | ▲ | ▲ | ▲ | ▲ | ● | ● | ● | ● | ● | ▲ | ▲ | ▲ | ▲ | ▲ | ● | | | | |
| | ERST20C-VM2D | | | | | | | | | | | | | | | | | | | | | | | | | | | | | | | | | | ● | ● | | |
| | ERST20C-VM6D | | | | | | | | | | | | | | | | | | | | | | | | | | | | | | | | | | ● | ● | | |
| | ERST20C-YM9D | | | | | | | | | | | | | | | | | | | | | | | | | | | | | | | | | | ● | ● | | |
| | ERST30C-VM2ED | | | | | | | | | | | | | | | | | | | | | | | | | | | | | | | | | | ● | ● | | |
| | ERST30C-VM6ED | | | | | | | | | | | | | | | | | | | | | | | | | | | | | | | | | | ● | ● | | |
| | ERST30C-YM9ED | | | | | | | | | | | | | | | | | | | | | | | | | | | | | | | | | | ● | ● | | |

●: Combination is available.

▲: Combination is possible but cooling function is still not available.

Blank: Combination is NOT available.

# 1 Combination table

| Split indoor/outdoor unit combination | | R32 | | | | | | | | | | | | | | | | | | | | | | | | | | | | | | | R410A | | | | |
|---|---|---|---|---|---|---|---|---|---|---|---|---|---|---|---|---|---|---|---|---|---|---|---|---|---|---|---|---|---|---|---|---|---|---|---|---|---|
| | | Eco Inverter | | | | | | | | | | | | | POWER INVERTER | | | | | | | | | ZUBADAN | | | | | | | | | | POWER INVERTER | | | | |
| | | SUZ-SWM40VA | SUZ-SWM60VA | SUZ-SWM80VA | SUZ-SWM30VA | SUZ-SHWM30VAH | SUZ-SWM40VA2(-SC) | SUZ-SHWM40VAH(-SC) | SUZ-SWM60VA2(-SC) | SUZ-SHWM60VAH(SC) | SUZ-SWM80VA2 | SUZ-SWM80VAH2 | SUZ-SWM100VA | SUZ-SWM100VAH | PUZ-SWM60VAA | PUZ-SWM80V/YAA | PUZ-SWM100V/YAA | PUZ-SWM120V/YAA | PUZ-SWM140V/YAA | PUD-SWM60VAA | PUD-SWM80V/YAA | PUD-SWM100V/YAA | PUD-SWM120V/YAA | PUZ-SHWM60VAA | PUZ-SHWM80V/YAA | PUZ-SHWM100V/YAA | PUZ-SHWM120V/YAA | PUZ-SHWM140V/YAA | PUD-SHWM60VAA | PUD-SHWM80V/YAA | PUD-SHWM100V/YAA | PUD-SHWM120V/YAA | PUD-SHWM140V/YAA | PUHZ-SW75V/YAA | PUHZ-SW100V/YAA | PUHZ-SW120V/YHA | PUHZ-SW160YKA | PUHZ-SW200YKA |
| Heating only Hydrobox | EHSD-MED | ● | ● | ● | ● | ● | ● | ● | ● | ● | ● | ● | ● | ● | ● | ● | ● | ● | ● | ● | ● | ● | ● | ● | ● | ● | ● | ● | ● | ● | ● | ● | ● | ● | | | | |
| | EHSD-VM2D | ● | ● | ● | ● | ● | ● | ● | ● | ● | ● | ● | ● | ● | ● | ● | ● | ● | ● | ● | ● | ● | ● | ● | ● | ● | ● | ● | ● | ● | ● | ● | ● | ● | | | | |
| | EHSD-VM6D | ● | ● | ● | ● | ● | ● | ● | ● | ● | ● | ● | ● | ● | ● | ● | ● | ● | ● | ● | ● | ● | ● | ● | ● | ● | ● | ● | ● | ● | ● | ● | ● | ● | | | | |
| | EHSD-YM9D | ● | ● | ● | ● | ● | ● | ● | ● | ● | ● | ● | ● | ● | ● | ● | ● | ● | ● | ● | ● | ● | ● | ● | ● | ● | ● | ● | ● | ● | ● | ● | ● | ● | | | | |
| | EHSD-YM9ED | ● | ● | ● | ● | ● | ● | ● | ● | ● | ● | ● | ● | ● | ● | ● | ● | ● | ● | ● | ● | ● | ● | ● | ● | ● | ● | ● | ● | ● | ● | ● | ● | ● | | | | |
| | EHSD-TM9D | ● | ● | ● | ● | ● | ● | ● | ● | ● | ● | ● | ● | ● | ● | ● | ● | ● | ● | ● | ● | ● | ● | ● | ● | ● | ● | ● | ● | ● | ● | ● | ● | ● | | | | |
| | EHSC-MED | | | | | | | | | | | | | | | | | | | | | | | | | | | | | | | | | | ● | ● | | |
| | EHSC-VM2D | | | | | | | | | | | | | | | | | | | | | | | | | | | | | | | | | | ● | ● | | |
| | EHSC-VM6D | | | | | | | | | | | | | | | | | | | | | | | | | | | | | | | | | | ● | ● | | |
| | EHSC-YM9D | | | | | | | | | | | | | | | | | | | | | | | | | | | | | | | | | | ● | ● | | |
| | EHSC-YM9ED | | | | | | | | | | | | | | | | | | | | | | | | | | | | | | | | | | ● | ● | | |
| | EHSC-TM9D | | | | | | | | | | | | | | | | | | | | | | | | | | | | | | | | | | ● | ● | | |
| | EHSE-YM9ED | | | | | | | | | | | | | | | | | | | | | | | | | | | | | | | | | | | | ● | ● |
| | EHSE-MED | | | | | | | | | | | | | | | | | | | | | | | | | | | | | | | | | | | | ● | ● |
| Reversible Hydrobox | ERSD-MED | ● | ● | ● | ● | ● | ● | ● | ● | ● | ● | ● | ● | ● | ● | ● | ● | ● | ● | ▲ | ▲ | ▲ | ▲ | ● | ● | ● | ● | ● | ▲ | ▲ | ▲ | ▲ | ▲ | ● | | | | |
| | ERSD-VM2D | ● | ● | ● | ● | ● | ● | ● | ● | ● | ● | ● | ● | ● | ● | ● | ● | ● | ● | ▲ | ▲ | ▲ | ▲ | ● | ● | ● | ● | ● | ▲ | ▲ | ▲ | ▲ | ▲ | ● | | | | |
| | ERSD-VM6D | ● | ● | ● | ● | ● | ● | ● | ● | ● | ● | ● | ● | ● | ● | ● | ● | ● | ● | ▲ | ▲ | ▲ | ▲ | ● | ● | ● | ● | ● | ▲ | ▲ | ▲ | ▲ | ▲ | ● | | | | |
| | ERSD-YM9D | ● | ● | ● | ● | ● | ● | ● | ● | ● | ● | ● | ● | ● | ● | ● | ● | ● | ● | ▲ | ▲ | ▲ | ▲ | ● | ● | ● | ● | ● | ▲ | ▲ | ▲ | ▲ | ▲ | ● | | | | |
| | ERSC-MED | | | | | | | | | | | | | | | | | | | | | | | | | | | | | | | | | | ● | ● | | |
| | ERSC-VM2D | | | | | | | | | | | | | | | | | | | | | | | | | | | | | | | | | | ● | ● | | |
| | ERSC-VM6D | | | | | | | | | | | | | | | | | | | | | | | | | | | | | | | | | | ● | ● | | |
| | ERSC-YM9D | | | | | | | | | | | | | | | | | | | | | | | | | | | | | | | | | | ● | ● | | |
| | ERSE-YM9ED | | | | | | | | | | | | | | | | | | | | | | | | | | | | | | | | | | | | ● | ● |
| | ERSE-MED | | | | | | | | | | | | | | | | | | | | | | | | | | | | | | | | | | | | ● | ● |

●: Combination is available.

▲: Combination is possible but cooling function is still not available.

Blank: Combination is NOT available.

# 1 Combination table

| Split indoor/outdoor unit combination | | R410A | | | | ATA/ATW Hybrid system | | | | | | | | |
|---|---|---|---|---|---|---|---|---|---|---|---|---|---|---|
| | | ZUBADAN | | | | Mr. SLIM+ | PUMY | | | | | | PXZ (R32) | |
| | | PUHZ-SHW80V/YAA | PUHZ-SHW112V/YAA | PUHZ-SHW140YHA | PUHZ-SHW230YKA2 | PUHZ-FRP71VHA2 | PUMY-P112VKM5 | PUMY-P125VKM5 | PUMY-P140VKM5 | PUMY-P112YKM(E)4 | PUMY-P125YKM(E)4 | PUMY-P140YKM(E)4 | PXZ-4F75VG | PXZ-5F85VG |
| Heating only Cylinder | EHST17D-VM2D | | | | | | | | | | | | ● | ● |
| | EHST17D-YM9D | | | | | | | | | | | | ● | ● |
| | EHST20D-MED | | | | | | | | | | | | | |
| | EHST20D-VM2D | | | | | | | | | | | | ● | ● |
| | EHST20D-VM6D | | | | | | | | | | | | ● | ● |
| | EHST20D-YM9D | | | | | | | | | | | | ● | ● |
| | EHST20D-YM9ED | | | | | | | | | | | | ● | ● |
| | EHST20D-TM9D | | | | | | | | | | | | ● | ● |
| | EHST30D-MED | | | | | | | | | | | | | |
| | EHST30D-VM6ED | | | | | | | | | | | | ● | ● |
| | EHST30D-YM9ED | | | | | | | | | | | | ● | ● |
| | EHST30D-TM9ED | | | | | | | | | | | | ● | ● |
| | EHST20C-MED | ● | ● | ● | | ● | | | | | | | | |
| | EHST20C-VM2D | ● | ● | ● | | ● | ● | ● | ● | ● | ● | ● | | |
| | EHST20C-VM6D | ● | ● | ● | | ● | ● | ● | ● | ● | ● | ● | | |
| | EHST20C-YM9D | ● | ● | ● | | ● | ● | ● | ● | ● | ● | ● | | |
| | EHST20C-YM9ED | ● | ● | ● | | ● | ● | ● | ● | ● | ● | ● | | |
| | EHST20C-TM9D | ● | ● | ● | | ● | ● | ● | ● | ● | ● | ● | | |
| | EHST30C-MED | ● | ● | ● | | | | | | | | | | |
| | EHST30C-VM6ED | ● | ● | ● | | | | | | | | | | |
| | EHST30C-YM9ED | ● | ● | ● | | | | | | | | | | |
| | EHST30C-TM9ED | ● | ● | ● | | | | | | | | | | |
| Reversible Cylinder | ERST17D-VM2D | | | | | | | | | | | | ▲ | ▲ |
| | ERST17D-VM2BD | | | | | | | | | | | | | |
| | ERST17D-VM6D | | | | | | | | | | | | ▲ | ▲ |
| | ERST17D-VM6BD | | | | | | | | | | | | | |
| | ERST17D-YM9BD | | | | | | | | | | | | | |
| | ERST20D-VM2D | | | | | | | | | | | | ▲ | ▲ |
| | ERST20D-VM6D | | | | | | | | | | | | ▲ | ▲ |
| | ERST20D-YM9D | | | | | | | | | | | | ▲ | ▲ |
| | ERST30D-VM2ED | | | | | | | | | | | | ▲ | ▲ |
| | ERST30D-VM6ED | | | | | | | | | | | | ▲ | ▲ |
| | ERST30D-YM9ED | | | | | | | | | | | | ▲ | ▲ |
| | ERST20C-VM2D | ● | ● | ● | | | | | | | | | | |
| | ERST20C-VM6D | ● | ● | ● | | | | | | | | | | |
| | ERST20C-YM9D | ● | ● | ● | | | | | | | | | | |
| | ERST30C-VM2ED | ● | ● | ● | | | | | | | | | | |
| | ERST30C-VM6ED | ● | ● | ● | | | | | | | | | | |
| | ERST30C-YM9ED | ● | ● | ● | | | | | | | | | | |

●: Combination is available.

▲: Combination is possible but cooling function is still not available.

Blank: Combination is NOT available.

# 1 Combination table

| Split indoor/outdoor unit combination | | R410A | | | | ATA/ATW Hybrid system | | | | | | | | |
|---|---|---|---|---|---|---|---|---|---|---|---|---|---|---|
| | | ZUBADAN | | | | Mr. SLIM | PUMY | | | | | | PXZ (R32) | |
| | | PUHZ-SHW80V/YAA | PUHZ-SHW112V/YAA | PUHZ-SHW140YHA | PUHZ-SHW230YKA2 | PUHZ-FRP71VHA2 | PUMY-P112VKM5 | PUMY-P125VKM5 | PUMY-P140VKM5 | PUMY-P112YKM(E)4 | PUMY-P125YKM(E)4 | PUMY-P140YKM(E)4 | PXZ-4F75VG | PXZ-5F85VG |
| Heating only Hydrobox | EHSD-MED | | | | | | | | | | | | | |
| | EHSD-VM2D | | | | | | | | | | | | ● | ● |
| | EHSD-VM6D | | | | | | | | | | | | ● | ● |
| | EHSD-YM9D | | | | | | | | | | | | ● | ● |
| | EHSD-YM9ED | | | | | | | | | | | | ● | ● |
| | EHSD-TM9D | | | | | | | | | | | | ● | ● |
| | EHSC-MED | ● | ● | ● | | ● | | | | | | | | |
| | EHSC-VM2D | ● | ● | ● | | ● | ● | ● | ● | ● | ● | ● | | |
| | EHSC-VM6D | ● | ● | ● | | ● | ● | ● | ● | ● | ● | ● | | |
| | EHSC-YM9D | ● | ● | ● | | ● | ● | ● | ● | ● | ● | ● | | |
| | EHSC-YM9ED | ● | ● | ● | | ● | ● | ● | ● | ● | ● | ● | | |
| | EHSC-TM9D | ● | ● | ● | | ● | ● | ● | ● | ● | ● | ● | | |
| | EHSE-YM9ED | | | | ● | | | | | | | | | |
| | EHSE-MED | | | | ● | | | | | | | | | |
| Reversible Hydrobox | ERSD-MED | | | | | | | | | | | | | |
| | ERSD-VM2D | | | | | | | | | | | | ▲ | ▲ |
| | ERSD-VM6D | | | | | | | | | | | | ▲ | ▲ |
| | ERSD-YM9D | | | | | | | | | | | | ▲ | ▲ |
| | ERSC-MED | ● | ● | ● | | | | | | | | | | |
| | ERSC-VM2D | ● | ● | ● | | | | | | | | | | |
| | ERSC-VM6D | ● | ● | ● | | | | | | | | | | |
| | ERSC-YM9D | ● | ● | ● | | | | | | | | | | |
| | ERSE-YM9ED | | | | ● | | | | | | | | | |
| | ERSE-MED | | | | ● | | | | | | | | | |

●: Combination is available.

▲: Combination is possible but cooling function is still not available.

Blank: Combination is NOT available.

| Packaged indoor/outdoor unit combination | | R32 | | | | |
|---|---|---|---|---|---|---|
| | | POWER INVERTER | | | | ZUBADAN |
| | | PUZ-WM50VHA | PUZ-WM60VAA | PUZ-WM85V/YAA | PUZ-WM112V/YAA | PUZ-HWM140V/YHA |
| Heating only Cylinder | EHPT17X-VM2D | ● | ● | ● | | |
| | EHPT17X-VM6D | ● | ● | ● | | |
| | EHPT17X-YM9D | ● | ● | ● | | |
| | EHPT20X-MED | ● | ● | ● | ● | ● |
| | EHPT20X-VM6D | ● | ● | ● | ● | ● |
| | EHPT20X-YM9D | ● | ● | ● | ● | ● |
| | EHPT20X-YM9ED | ● | ● | ● | ● | ● |
| | EHPT20X-TM9D | ● | ● | ● | ● | ● |
| | EHPT20X-MHEDW | ● | ● | ● | ● | ● |
| | EHPT30X-MED | | | ● | ● | ● |
| | EHPT30X-YM9ED | | | ● | ● | ● |
| Reversible Cylinder | ERPT17X-VM2D | ● | ● | ● | | |
| | ERPT20X-VM2D | ● | ● | ● | ● | ● |
| | ERPT20X-MD | ● | ● | ● | ● | ● |
| | ERPT20X-VM6D | ● | ● | ● | ● | ● |
| | ERPT30X-VM2ED | | | ● | ● | ● |
| | ERPT30X-VM6ED | | | ● | ● | ● |
| Heating only Hydrobox | EHPX-VM2D | ● | ● | ● | ● | ● |
| | EHPX-VM6D | ● | ● | ● | ● | ● |
| | EHPX-YM9D | ● | ● | ● | ● | ● |
| | EHPX-MED | ● | ● | ● | ● | ● |
| | EHPX-YM9ED | ● | ● | ● | ● | ● |
| Reversible Hydrobox | ERPX-MD | ● | ● | ● | ● | ● |
| | ERPX-VM2D | ● | ● | ● | ● | ● |
| | ERPX-VM6D | ● | ● | ● | ● | ● |
| | ERPX-YM9D | ● | ● | ● | ● | ● |

●: Combination is available.

Blank: Combination is NOT available.

# 2 Specifications

## 2.1. Cylinder unit

| Model name | | | | EHST17D-VM2D | EHST17D-YM9D | EHST20D-MED | EHST20D-VM2D | EHST20D-VM6D | EHST20D-YM9D |
|---|---|---|---|---|---|---|---|---|---|
| Dimensions | Without package | Height | mm | 1400 | 1400 | 1600 | 1600 | 1600 | 1600 |
| | | Width | mm | 595 | 595 | 595 | 595 | 595 | 595 |
| | | Depth | mm | 680 | 680 | 680 | 680 | 680 | 680 |
| | With package | Height | mm | 1670 | 1670 | 1850 | 1850 | 1850 | 1850 |
| | | Width | mm | 660 | 660 | 660 | 660 | 660 | 660 |
| | | Depth | mm | 800 | 800 | 800 | 800 | 800 | 800 |
| Casing | Munsell | | - | 6.2PB 9/0.9 | 6.2PB 9/0.9 | 6.2PB 9/0.9 | 6.2PB 9/0.9 | 6.2PB 9/0.9 | 6.2PB 9/0.9 |
| | RAL code | | - | 260 90 05 | 260 90 05 | 260 90 05 | 260 90 05 | 260 90 05 | 260 90 05 |
| | Material | | - | Pre-coated metal | Pre-coated metal | Pre-coated metal | Pre-coated metal | Pre-coated metal | Pre-coated metal |
| Product weight (empty) | | | kg | 93 | 96 | 93 | 99 | 100 | 102 |
| Product weight (full) | | | kg | 269 | 274 | 299 | 305 | 306 | 310 |
| Gross weight | | | kg | 109 | 111 | 110 | 116 | 117 | 119 |
| Water volume of heating circuit in the unit *1 | | | L | 3.4 | 5.7 | 3.5 | 3.5 | 3.5 | 5.8 |
| Type of Installation | | | - | Floor standing | Floor standing | Floor standing | Floor standing | Floor standing | Floor standing |
| Electrical data | Control board *2 (Including 4 pumps) | Power supply | Ph | ~/N | ~/N | ~/N | ~/N | ~/N | ~/N |
| | | | V | 230 | 230 | 230 | 230 | 230 | 230 |
| | | | Hz | 50 | 50 | 50 | 50 | 50 | 50 |
| | | Input | kW | 0.30 | 0.30 | 0.30 | 0.30 | 0.30 | 0.30 |
| | | Current | A | 1.95 | 1.95 | 1.95 | 1.95 | 1.95 | 1.95 |
| | | Breaker | A | 10 | 10 | 10 | 10 | 10 | 10 |
| | Booster heater | Power supply | Ph | ~/N | 3~ | - | ~/N | ~/N | 3~ |
| | | | V | 230 | 400 | - | 230 | 230 | 400 |
| | | | Hz | 50 | 50 | - | 50 | 50 | 50 |
| | | Capacity | kW | 2 | 3+6 | - | 2 | 2+4 | 3+6 |
| | | Heater step | - | 1 | 3 | - | 1 | 3 | 3 |
| | | Current | A | 9 | 13 | - | 9 | 26 | 13 |
| | | Breaker | A | 16 | 16 | - | 16 | 32 | 16 |
| | Immersion heater | Power supply | Ph | - | - | - | - | - | - |
| | | | V | - | - | - | - | - | - |
| | | | Hz | - | - | - | - | - | - |
| | | Capacity | kW | - | - | - | - | - | - |
| | | Current | A | - | - | - | - | - | - |
| | | Breaker | A | - | - | - | - | - | - |
| Water circulation pump (Primary circuit) | Type | | - | DC motor | DC motor | DC motor | DC motor | DC motor | DC motor |
| | Input (10/20/max L/min)*3 | Speed 1 | W | 10/13/14 | 10/13/14 | 10/13/15 | 10/13/15 | 10/13/15 | 10/13/15 |
| | | Speed 2 | W | 16/21/24 | 16/21/24 | 16/21/27 | 16/21/27 | 16/21/27 | 16/21/27 |
| | | Speed 3 | W | 24/32/36 | 24/32/36 | 24/32/42 | 24/32/42 | 24/32/42 | 24/32/42 |
| | | Speed 4 | W | 34/46/54 | 34/46/54 | 34/46/58 | 34/46/58 | 34/46/58 | 34/46/58 |
| | | Speed 5 | W | 47/58/60 | 47/58/60 | 47/58/60 | 47/58/60 | 47/58/60 | 47/58/60 |
| Performance curve: please refer to section 4.6.4 | Current (10/20/max L/min)*3 | Speed 1 | A | 0.2/0.2/0.3 | 0.2/0.2/0.3 | 0.2/0.2/0.3 | 0.2/0.2/0.3 | 0.2/0.2/0.3 | 0.2/0.2/0.3 |
| | | Speed 2 | A | 0.2/0.3/0.4 | 0.2/0.3/0.4 | 0.2/0.3/0.4 | 0.2/0.3/0.4 | 0.2/0.3/0.4 | 0.2/0.3/0.4 |
| | | Speed 3 | A | 0.3/0.4/0.5 | 0.3/0.4/0.5 | 0.3/0.4/0.5 | 0.3/0.4/0.5 | 0.3/0.4/0.5 | 0.3/0.4/0.5 |
| | | Speed 4 | A | 0.4/0.5/0.6 | 0.4/0.5/0.6 | 0.4/0.5/0.6 | 0.4/0.5/0.6 | 0.4/0.5/0.6 | 0.4/0.5/0.6 |
| | | Speed 5 | A | 0.5/0.6/0.6 | 0.5/0.6/0.6 | 0.5/0.6/0.6 | 0.5/0.6/0.6 | 0.5/0.6/0.6 | 0.5/0.6/0.6 |
| Water circulation pump (DHW circuit) | Input | Speed Ⅰ | W | 55 | 55 | 55 | 55 | 55 | 55 |
| | | Speed Ⅱ (Default setting) | W | 69 | 69 | 69 | 69 | 69 | 69 |
| | | Speed Ⅲ | W | 80 | 80 | 80 | 80 | 80 | 80 |
| | Current | Speed Ⅰ | A | 0.25 | 0.25 | 0.25 | 0.25 | 0.25 | 0.25 |
| | | Speed Ⅱ (Default setting) | A | 0.31 | 0.31 | 0.31 | 0.31 | 0.31 | 0.31 |
| | | Speed Ⅲ | A | 0.34 | 0.34 | 0.34 | 0.34 | 0.34 | 0.34 |
| | Flow rate | Speed Ⅰ | L/min | 13.5 | 13.5 | 13.5 | 13.5 | 13.5 | 13.5 |
| | | Speed Ⅱ (Default setting) | L/min | 19.0 | 19.0 | 19.0 | 19.0 | 19.0 | 19.0 |
| | | Speed Ⅲ | L/min | 22.9 | 22.9 | 22.9 | 22.9 | 22.9 | 22.9 |
| Flow rate | Primary circuit | Max.*4 | L/min | 25.8 | 25.8 | 36.9 | 36.9 | 36.9 | 36.9 |
| | | Min.*5 | L/min | 5.0 | 5.0 | 5.0 | 5.0 | 5.0 | 5.0 |
| Heat exchanger | Refrigerant - Primary circuit water | | - | MWA1-44DM | MWA1-44DM | MWA1-44DM | MWA1-44DM | MWA1-44DM | MWA1-44DM |
| | Primary circuit water - Domestic hot water | | - | CBH18-18H | CBH18-18H | CBH18-18H | CBH18-18H | CBH18-18H | CBH18-18H |
| Domestic hot water tank | Volume | | L | 170 | 170 | 200 | 200 | 200 | 200 |
| | Material | | - | Duplex 2304 stainless steel (EN10088) | Duplex 2304 stainless steel (EN10088) | Duplex 2304 stainless steel (EN10088) | Duplex 2304 stainless steel (EN10088) | Duplex 2304 stainless steel (EN10088) | Duplex 2304 stainless steel (EN10088) |
| | Declared load profile | | - | L | L | L | L | L | L |
| | Average climate | $\eta_{wh}$ (water heating efficiency) *6 | - | 135 to 148 | 135~148 | 141 to 159 | 141 to 159 | 141 to 159 | 141 to 159 |
| | | $P_{es}$ (standby power input) *6 | kW | 0.026 to 0.039 | 0.026~0.039 | 0.024 to 0.035 | 0.024 to 0.035 | 0.024 to 0.035 | 0.024 to 0.035 |
| | | Water heater energy efficiency class | - | A+ | A+ | A+ | A+ | A+ | A+ |
| | | Heat loss *7 | kWh/24hr | 1.65 | 1.65 | 1.89 | 1.89 | 1.89 | 1.89 |
| Expansion vessel (Primary circuit) | Volume | | L | 12 | 12 | - | 12 | 12 | 12 |
| | Charge pressure | | MPa | 0.1 | 0.1 | - | 0.1 | 0.1 | 0.1 |
| Safety device | Primary circuit | Control thermistor | °C | 1 to 80 | 1~80 | 1 to 80 | 1 to 80 | 1 to 80 | 1 to 80 |
| | | Pressure relief valve | MPa | 0.3 | 0.3 | 0.3 | 0.3 | 0.3 | 0.3 |
| | | Flow sensor (Min. flow) | L/min | 5.0 | 5.0 | 5.0 | 5.0 | 5.0 | 5.0 |
| | | BH manual reset thermostat | °C | 90 | 90 | - | 90 | 90 | 90 |
| | | BH thermal Cut Off | °C | 121 | 121 | - | 121 | 121 | 121 |
| | DHW tank | Control thermistor | °C | 75 | 75 | 75 | 75 | 75 | 75 |
| | | IH manual reset thermostat | °C | - | - | - | - | - | - |
| | | Temperature & pressure relief valve | °C | - | - | - | - | - | - |
| | | | MPa | 1.0 | 1.0 | 1.0 | 1.0 | 1.0 | 1.0 |
| Connections | Water | Primary circuit | mm | φ28 | φ28 | φ28 | φ28 | φ28 | φ28 |
| | | DHW circuit | mm | φ22 | φ22 | φ22 | φ22 | φ22 | φ22 |
| | Refrigerant | Gas | mm | φ12.7 | φ12.7 | φ12.7 | φ12.7 | φ12.7 | φ12.7 |
| | | Liquid | mm | φ6.35 | φ6.35 | φ6.35 | φ6.35 | φ6.35 | φ6.35 |
| Refrigerant *8 | | | - | R32/R410A | R32/R410A | R32/R410A | R32/R410A | R32/R410A | R32/R410A |
| Guaranteed operating range *9 | Ambient | | °C | 0 to 35 | 0~35 | 0 to 35 | 0 to 35 | 0 to 35 | 0 to 35 |
| | | | %RH | ≦80 | ≦80 | ≦80 | ≦80 | ≦80 | ≦80 |
| | Outdoor temperature | Heating | °C | See outdoor unit spec table | | | | | |
| | | Cooling | °C | - | - | - | - | - | - |
| Operating range | Heating | Room temperature | °C | 10 to 30 | 10~30 | 10 to 30 | 10 to 30 | 10 to 30 | 10 to 30 |
| | | Flow temperature | °C | 20 to 60 | 20~60 | 20 to 60 | 20 to 60 | 20 to 60 | 20 to 60 |
| | Cooling | Room temperature | °C | - | - | - | - | - | - |
| | | Flow temperature | °C | - | - | - | - | - | - |
| | DHW *10 | | °C | 40 to 60 | 40~60 | 40 to 60 | 40 to 60 | 40 to 60 | 40 to 60 |
| | Legionella prevention *10 | | °C | 60 to 70 | 60~70 | 60 to 70 | 60 to 70 | 60 to 70 | 60 to 70 |
| Sound power level (PWL) | | | dB(A) | 41 | 41 | 41 | 41 | 41 | 41 |

*1 Volume of sanitary water circuit, primary DHW circuit (from 3-way valve to confluent point with Heating circuit), piping to Expansion vessel, and Expansion vessel is not included in this value.
*2 When powered from independent source.
*3 Allowable flow rate range differs depending on connected outdoor unit. Please refer to section 4.6.4.
*4 If the water flow rate range exceeds maximum, the flow speed will be greater than 2.0 m/s, which could corrode the pipes.
*5 If the water flow is less than the minimum, the flow error will be activated.
*6 Hot water performance differs depending on connected outdoor unit.
*7 24h temperature decay at top of the tank from 65degC at ambient temperature 20degC (BS EN 12897)
*8 Refrigerant of outdoor unit connected to cylinder unit.
*9 The enviroment must be frost-free.
*10 For the model without both booster heater and immersion heater, the max. hot water temperature is [Max. outlet water of outdoor unit -3°C]. For the max. outlet of outdoor unit spec table.

# 2 Specifications

| Model name | | | | | EHST20D-YM9ED | EHST20D-TM9D | EHST30D-MED | EHST30D-VM6ED | EHST30D-YM9ED | EHST30D-TM9ED |
|---|---|---|---|---|---|---|---|---|---|---|
| Dimensions | Without package | Height | mm | | 1600 | 1600 | 2050 | 2050 | 2050 | 2050 |
| | | Width | mm | | 595 | 595 | 595 | 595 | 595 | 595 |
| | | Depth | mm | | 680 | 680 | 680 | 680 | 680 | 680 |
| | With package | Height | mm | | 1850 | 1850 | 2320 | 2320 | 2320 | 2320 |
| | | Width | mm | | 660 | 660 | 660 | 660 | 660 | 660 |
| | | Depth | mm | | 800 | 800 | 800 | 800 | 800 | 800 |
| Casing | Munsell | | - | | 6.2PB 9/0.9 | 6.2PB 9/0.9 | 6.2PB 9/0.9 | 6.2PB 9/0.9 | 6.2PB 9/0.9 | 6.2PB 9/0.9 |
| | RAL code | | - | | 260 90 05 | 260 90 05 | 260 90 05 | 260 90 05 | 260 90 05 | 260 90 05 |
| | Material | | - | | Pre-coated metal | Pre-coated metal | Pre-coated metal | Pre-coated metal | Pre-coated metal | Pre-coated metal |
| Product weight (empty) | | | kg | | 96 | 102 | 113 | 115 | 117 | 117 |
| Product weight (full) | | | kg | | 305 | 310 | 420 | 422 | 426 | 426 |
| Gross weight | | | kg | | 113 | 119 | 132 | 135 | 136 | 136 |
| Water volume of heating circuit in the unit *1 | | | L | | 5.8 | 5.8 | 3.9 | 3.9 | 6.2 | 6.2 |
| Type of Installation | | | - | | Floor standing | Floor standing | Floor standing | Floor standing | Floor standing | Floor standing |
| Electrical data | Control board *2 (Including 4 pumps) | Power supply | Ph | | ~/N | ~/N | ~/N | ~/N | ~/N | ~/N |
| | | | V | | 230 | 230 | 230 | 230 | 230 | 230 |
| | | | Hz | | 50 | 50 | 50 | 50 | 50 | 50 |
| | | Input | kW | | 0.30 | 0.30 | 0.30 | 0.30 | 0.30 | 0.30 |
| | | Current | A | | 1.95 | 1.95 | 1.95 | 1.95 | 1.95 | 1.95 |
| | | Breaker | A | | 10 | 10 | 10 | 10 | 10 | 10 |
| | Booster heater | Power supply | Ph | | 3~ | 3~ | - | ~/N | 3~ | 3~ |
| | | | V | | 400 | 230 | - | 230 | 400 | 230 |
| | | | Hz | | 50 | 50 | - | 50 | 50 | 50 |
| | | Capacity | kW | | 3+6 | 3+6 | - | 2+4 | 3+6 | 3+6 |
| | | Heater step | - | | 3 | 3 | - | 3 | 3 | 3 |
| | | Current | A | | 13 | 23 | - | 26 | 13 | 23 |
| | | Breaker | A | | 16 | 32 | - | 32 | 16 | 32 |
| | Immersion heater | Power supply | Ph | | - | - | - | - | - | - |
| | | | V | | - | - | - | - | - | - |
| | | | Hz | | - | - | - | - | - | - |
| | | Capacity | kW | | - | - | - | - | - | - |
| | | Current | A | | - | - | - | - | - | - |
| | | Breaker | A | | - | - | - | - | - | - |
| Water circulation pump (Primary circuit) | Type | | - | | DC motor | DC motor | DC motor | DC motor | DC motor | DC motor |
| | Input (10/20/max L/min)*3 | Speed 1 | W | | 10/13/15 | 10/13/15 | 10/13/15 | 10/13/15 | 10/13/15 | 10/13/15 |
| | | Speed 2 | W | | 16/21/27 | 16/21/27 | 16/21/27 | 16/21/27 | 16/21/27 | 16/21/27 |
| | | Speed 3 | W | | 24/32/42 | 24/32/42 | 24/32/42 | 24/32/42 | 24/32/42 | 24/32/42 |
| | | Speed 4 | W | | 34/46/58 | 34/46/58 | 34/46/58 | 34/46/58 | 34/46/58 | 34/46/58 |
| | | Speed 5 | W | | 47/58/60 | 47/58/60 | 47/58/60 | 47/58/60 | 47/58/60 | 47/58/60 |
| Performance curve: please refer to section 4.6.4 | Current (10/20/max L/min)*3 | Speed 1 | A | | 0.2/0.2/0.3 | 0.2/0.2/0.3 | 0.2/0.2/0.3 | 0.2/0.2/0.3 | 0.2/0.2/0.3 | 0.2/0.2/0.3 |
| | | Speed 2 | A | | 0.2/0.3/0.4 | 0.2/0.3/0.4 | 0.2/0.3/0.4 | 0.2/0.3/0.4 | 0.2/0.3/0.4 | 0.2/0.3/0.4 |
| | | Speed 3 | A | | 0.3/0.4/0.5 | 0.3/0.4/0.5 | 0.3/0.4/0.5 | 0.3/0.4/0.5 | 0.3/0.4/0.5 | 0.3/0.4/0.5 |
| | | Speed 4 | A | | 0.4/0.5/0.6 | 0.4/0.5/0.6 | 0.4/0.5/0.6 | 0.4/0.5/0.6 | 0.4/0.5/0.6 | 0.4/0.5/0.6 |
| | | Speed 5 | A | | 0.5/0.6/0.6 | 0.5/0.6/0.6 | 0.5/0.6/0.6 | 0.5/0.6/0.6 | 0.5/0.6/0.6 | 0.5/0.6/0.6 |
| Water circulation pump (DHW circuit) | Input | Speed Ⅰ | W | | 55 | 55 | 58 | 58 | 58 | 58 |
| | | Speed Ⅱ (Default setting) | W | | 69 | 69 | 72 | 72 | 72 | 72 |
| | | Speed Ⅲ | W | | 80 | 80 | 83 | 83 | 83 | 83 |
| | Current | Speed Ⅰ | A | | 0.25 | 0.25 | 0.27 | 0.27 | 0.27 | 0.27 |
| | | Speed Ⅱ (Default setting) | A | | 0.31 | 0.31 | 0.33 | 0.33 | 0.33 | 0.33 |
| | | Speed Ⅲ | A | | 0.34 | 0.34 | 0.36 | 0.36 | 0.36 | 0.36 |
| | Flow rate | Speed Ⅰ | L/min | | 13.5 | 13.5 | 14.5 | 14.5 | 14.5 | 14.5 |
| | | Speed Ⅱ (Default setting) | L/min | | 19.0 | 19.0 | 21.0 | 21.0 | 21.0 | 21.0 |
| | | Speed Ⅲ | L/min | | 22.9 | 22.9 | 25.2 | 25.2 | 25.2 | 25.2 |
| Flow rate | Primary circuit | Max.*4 | L/min | | 36.9 | 36.9 | 36.9 | 36.9 | 36.9 | 36.9 |
| | | Min.*5 | L/min | | 5.0 | 5.0 | 5.0 | 5.0 | 5.0 | 5.0 |
| Heat exchanger | Refrigerant - Primary circuit water | | - | | MWA1-44DM | MWA1-44DM | MWA1-44DM | MWA1-44DM | MWA1-44DM | MWA1-44DM |
| | Primary circuit water - Domestic hot water | | - | | CBH18-18H | CBH18-18H | CBH18-24H | CBH18-24H | CBH18-24H | CBH18-24H |
| Domestic hot water tank | Volume | | L | | 200 | 200 | 300 | 300 | 300 | 300 |
| | Material | | - | | Duplex 2304 stainless steel (EN10088) | Duplex 2304 stainless steel (EN10088) | Duplex 2304 stainless steel (EN10088) | Duplex 2304 stainless steel (EN10088) | Duplex 2304 stainless steel (EN10088) | Duplex 2304 stainless steel (EN10088) |
| | Declared load profile | | - | | L | L | XL | XL | XL | XL |
| | Average climate | $\eta_{wh}$ (water heating efficiency) *6 | - | | 141 to 159 | 141 to 159 | 119 to 128 | 119 to 128 | 119 to 128 | 119 to 128 |
| | | $P_{es}$ (standby power input) *6 | kW | | 0.024 to 0.035 | 0.024 to 0.035 | 0.026 to 0.041 | 0.026 to 0.041 | 0.026 to 0.041 | 0.026 to 0.041 |
| | | Water heater energy efficiency class | - | | A+ | A+ | A or A+ | A or A+ | A or A+ | A or A+ |
| | | Heat loss *7 | kWh/24hr | | 1.89 | 1.89 | 2.27 | 2.27 | 2.27 | 2.27 |
| Expansion vessel (Primary circuit) | Volume | | L | | - | 12 | - | - | - | - |
| | Charge pressure | | MPa | | - | 0.1 | - | - | - | - |
| Safety device | Primary circuit | Control thermistor | °C | | 1 to 80 | 1 to 80 | 1 to 80 | 1 to 80 | 1 to 80 | 1 to 80 |
| | | Pressure relief valve | MPa | | 0.3 | 0.3 | 0.3 | 0.3 | 0.3 | 0.3 |
| | | Flow sensor (Min. flow) | L/min | | 5.0 | 5.0 | 5.0 | 5.0 | 5.0 | 5.0 |
| | | BH manual reset thermostat | °C | | 90 | 90 | - | 90 | 90 | 90 |
| | | BH thermal Cut Off | °C | | 121 | 121 | - | 121 | 121 | 121 |
| | DHW tank | Control thermistor | °C | | 75 | 75 | 75 | 75 | 75 | 75 |
| | | IH manual reset thermostat | °C | | - | - | - | - | - | - |
| | | Temperature & pressure relief valve | °C | | - | - | - | - | - | - |
| | | | MPa | | 1.0 | 1.0 | 1.0 | 1.0 | 1.0 | 1.0 |
| Connections | Water | Primary circuit | mm | | φ28 | φ28 | φ28 | φ28 | φ28 | φ28 |
| | | DHW circuit | mm | | φ22 | φ22 | φ22 | φ22 | φ22 | φ22 |
| | Refrigerant | Gas | mm | | φ12.7 | φ12.7 | φ12.7 | φ12.7 | φ12.7 | φ12.7 |
| | | Liquid | mm | | φ6.35 | φ6.35 | φ6.35 | φ6.35 | φ6.35 | φ6.35 |
| Refrigerant *8 | | | - | | R32/R410A | R32/R410A | R32/R410A | R32/R410A | R32/R410A | R32/R410A |
| Guaranteed operating range *9 | Ambient | | °C | | 0 to 35 | 0 to 35 | 0 to 35 | 0 to 35 | 0 to 35 | 0 to 35 |
| | | | %RH | | ≦80 | ≦80 | ≦80 | ≦80 | ≦80 | ≦80 |
| | Outdoor temperature | Heating | °C | | See outdoor unit spec table | | | | | |
| | | Cooling | °C | | - | - | - | - | - | - |
| Operating range | Heating | Room temperature | °C | | 10 to 30 | 10 to 30 | 10 to 30 | 10 to 30 | 10 to 30 | 10 to 30 |
| | | Flow temperature | °C | | 20 to 60 | 20 to 60 | 20 to 60 | 20 to 60 | 20 to 60 | 20 to 60 |
| | Cooling | Room temperature | °C | | - | - | - | - | - | - |
| | | Flow temperature | °C | | - | - | - | - | - | - |
| | DHW *10 | | °C | | 40 to 60 | 40 to 60 | 40 to 60 | 40 to 60 | 40 to 60 | 40 to 60 |
| | Legionella prevention *10 | | °C | | 60 to 70 | 60 to 70 | 60 to 70 | 60 to 70 | 60 to 70 | 60 to 70 |
| Sound power level (PWL) | | | dB(A) | | 41 | 41 | 41 | 41 | 41 | 41 |

*1 Volume of sanitary water circuit, primary DHW circuit (from 3-way valve to confluent point with Heating circuit), piping to Expansion vessel, and Expansion vessel is not included in this value.
*2 When powered from independent source.
*3 Allowable flow rate range differs depending on connected outdoor unit. Please refer to section 4.6.4.
*4 If the water flow rate range exceeds maximum, the flow speed will be greater than 2.0 m/s, which could corrode the pipes.
*5 If the water flow is less than the minimum, the flow error will be activated.
*6 Hot water performance differs depending on connected outdoor unit.
*7 24h temperature decay at top of the tank from 65degC at ambient temperature 20degC (BS EN 12897)
*8 Refrigerant of outdoor unit connected to cylinder unit.
*9 The enviroment must be frost-free.
*10 For the model without both booster heater and immersion heater, the max. hot water temperature is [Max. outlet water of outdoor unit -3°C]. For the max. outlet of outdoor unit spec table.

# 2 Specifications

| Model name | | | | | EHST20C-MED | EHST20C-VM2D | EHST20C-VM6D | EHST20C-YM9D | EHST20C-YM9ED | EHST20C-TM9D |
|---|---|---|---|---|---|---|---|---|---|---|
| Dimensions | Without package | Height | | mm | 1600 | 1600 | 1600 | 1600 | 1600 | 1600 |
| | | Width | | mm | 595 | 595 | 595 | 595 | 595 | 595 |
| | | Depth | | mm | 680 | 680 | 680 | 680 | 680 | 680 |
| | With package | Height | | mm | 1850 | 1850 | 1850 | 1850 | 1850 | 1850 |
| | | Width | | mm | 660 | 660 | 660 | 660 | 660 | 660 |
| | | Depth | | mm | 800 | 800 | 800 | 800 | 800 | 800 |
| Casing | Munsell | | | - | 6.2PB 9/0.9 | 6.2PB 9/0.9 | 6.2PB 9/0.9 | 6.2PB 9/0.9 | 6.2PB 9/0.9 | 6.2PB 9/0.9 |
| | RAL code | | | - | 260 90 05 | 260 90 05 | 260 90 05 | 260 90 05 | 260 90 05 | 260 90 05 |
| | Material | | | - | Pre-coated metal | Pre-coated metal | Pre-coated metal | Pre-coated metal | Pre-coated metal | Pre-coated metal |
| Product weight (empty) | | | | kg | 103 | 110 | 110 | 112 | 107 | 112 |
| Product weight (full) | | | | kg | 310 | 317 | 318 | 322 | 316 | 322 |
| Gross weight | | | | kg | 120 | 127 | 127 | 129 | 124 | 129 |
| Water volume of heating circuit in the unit *1 | | | | L | 4.6 | 4.6 | 4.6 | 6.9 | 6.9 | 6.9 |
| Type of Installation | | | | - | Floor standing | Floor standing | Floor standing | Floor standing | Floor standing | Floor standing |
| Electrical data | Control board *2 (Including 4 pumps) | Power supply | | Ph | ~/N | ~/N | ~/N | ~/N | ~/N | ~/N |
| | | | | V | 230 | 230 | 230 | 230 | 230 | 230 |
| | | | | Hz | 50 | 50 | 50 | 50 | 50 | 50 |
| | | Input | | kW | 0.30 | 0.30 | 0.30 | 0.30 | 0.30 | 0.30 |
| | | Current | | A | 1.95 | 1.95 | 1.95 | 1.95 | 1.95 | 1.95 |
| | | Breaker | | A | 10 | 10 | 10 | 10 | 10 | 10 |
| | Booster heater | Power supply | | Ph | - | ~/N | ~/N | 3~ | 3~ | 3~ |
| | | | | V | - | 230 | 230 | 400 | 400 | 230 |
| | | | | Hz | - | 50 | 50 | 50 | 50 | 50 |
| | | Capacity | | kW | - | 2 | 2+4 | 3+6 | 3+6 | 3+6 |
| | | Heater step | | - | - | 1 | 3 | 3 | 3 | 3 |
| | | Current | | A | - | 9 | 26 | 13 | 13 | 23 |
| | | Breaker | | A | - | 16 | 32 | 16 | 16 | 32 |
| | Immersion heater | Power supply | | Ph | - | - | - | - | - | - |
| | | | | V | - | - | - | - | - | - |
| | | | | Hz | - | - | - | - | - | - |
| | | Capacity | | kW | - | - | - | - | - | - |
| | | Current | | A | - | - | - | - | - | - |
| | | Breaker | | A | - | - | - | - | - | - |
| Water circulation pump (Primary circuit) | Type | | | - | DC motor | DC motor | DC motor | DC motor | DC motor | DC motor |
| | Input (10/20/max L/min)*3 | Speed 1 | | W | 10/13/15 | 10/13/15 | 10/13/15 | 10/13/15 | 10/13/15 | 10/13/15 |
| | | Speed 2 | | W | 16/21/27 | 16/21/27 | 16/21/27 | 16/21/27 | 16/21/27 | 16/21/27 |
| | | Speed 3 | | W | 24/32/42 | 24/32/42 | 24/32/42 | 24/32/42 | 24/32/42 | 24/32/42 |
| | | Speed 4 | | W | 34/46/58 | 34/46/58 | 34/46/58 | 34/46/58 | 34/46/58 | 34/46/58 |
| | | Speed 5 | | W | 47/58/60 | 47/58/60 | 47/58/60 | 47/58/60 | 47/58/60 | 47/58/60 |
| Performance curve: please refer to section 4.6.4 | Current (10/20/max L/min)*3 | Speed 1 | | A | 0.2/0.2/0.3 | 0.2/0.2/0.3 | 0.2/0.2/0.3 | 0.2/0.2/0.3 | 0.2/0.2/0.3 | 0.2/0.2/0.3 |
| | | Speed 2 | | A | 0.2/0.3/0.4 | 0.2/0.3/0.4 | 0.2/0.3/0.4 | 0.2/0.3/0.4 | 0.2/0.3/0.4 | 0.2/0.3/0.4 |
| | | Speed 3 | | A | 0.3/0.4/0.5 | 0.3/0.4/0.5 | 0.3/0.4/0.5 | 0.3/0.4/0.5 | 0.3/0.4/0.5 | 0.3/0.4/0.5 |
| | | Speed 4 | | A | 0.4/0.5/0.6 | 0.4/0.5/0.6 | 0.4/0.5/0.6 | 0.4/0.5/0.6 | 0.4/0.5/0.6 | 0.4/0.5/0.6 |
| | | Speed 5 | | A | 0.5/0.6/0.6 | 0.5/0.6/0.6 | 0.5/0.6/0.6 | 0.5/0.6/0.6 | 0.5/0.6/0.6 | 0.5/0.6/0.6 |
| Water circulation pump (DHW circuit) | Input | Speed Ⅰ | | W | 58 | 58 | 58 | 58 | 58 | 58 |
| | | Speed Ⅱ (Default setting) | | W | 72 | 72 | 72 | 72 | 72 | 72 |
| | | Speed Ⅲ | | W | 83 | 83 | 83 | 83 | 83 | 83 |
| | Current | Speed Ⅰ | | A | 0.27 | 0.27 | 0.27 | 0.27 | 0.27 | 0.27 |
| | | Speed Ⅱ (Default setting) | | A | 0.33 | 0.33 | 0.33 | 0.33 | 0.33 | 0.33 |
| | | Speed Ⅲ | | A | 0.36 | 0.36 | 0.36 | 0.36 | 0.36 | 0.36 |
| | Flow rate | Speed Ⅰ | | L/min | 14.5 | 14.5 | 14.5 | 14.5 | 14.5 | 14.5 |
| | | Speed Ⅱ (Default setting) | | L/min | 21.0 | 21.0 | 21.0 | 21.0 | 21.0 | 21.0 |
| | | Speed Ⅲ | | L/min | 25.2 | 25.2 | 25.2 | 25.2 | 25.2 | 25.2 |
| Flow rate | Primary circuit | Max.*4 | | L/min | 36.9 | 36.9 | 36.9 | 36.9 | 36.9 | 36.9 |
| | | Min.*5 | | L/min | 5.0 | 5.0 | 5.0 | 5.0 | 5.0 | 5.0 |
| Heat exchanger | Refrigerant - Primary circuit water | | | - | MWA2-38PA-4 | MWA2-38PA-4 | MWA2-38PA-4 | MWA2-38PA-4 | MWA2-38PA-4 | MWA2-38PA-4 |
| | Primary circuit water - Domestic hot water | | | - | CBH18-24H | CBH18-24H | CBH18-24H | CBH18-24H | CBH18-24H | CBH18-24H |
| Domestic hot water tank | Volume | | | L | 200 | 200 | 200 | 200 | 200 | 200 |
| | Material | | | - | Duplex 2304 stainless steel (EN10088) | Duplex 2304 stainless steel (EN10088) | Duplex 2304 stainless steel (EN10088) | Duplex 2304 stainless steel (EN10088) | Duplex 2304 stainless steel (EN10088) | Duplex 2304 stainless steel (EN10088) |
| | Declared load profile | | | - | L | L | L | L | L | L |
| | Average climate | $\eta_{wh}$ (water heating efficiency) *6 | | - | 139 to 145 | 139 to 145 | 139 to 145 | 139 to 145 | 139 to 145 | 139 to 145 |
| | | $P_{es}$ (standby power input) *6 | | kW | 0.035 | 0.035 | 0.035 | 0.035 | 0.035 | 0.035 |
| | | Water heater energy efficiency class | | - | A+ | A+ | A+ | A+ | A+ | A+ |
| | | Heat loss *7 | | kWh/24hr | 1.89 | 1.89 | 1.89 | 1.89 | 1.89 | 1.89 |
| Expansion vessel (Primary circuit) | Volume | | | L | - | 12 | 12 | 12 | - | 12 |
| | Charge pressure | | | MPa | - | 0.1 | 0.1 | 0.1 | - | 0.1 |
| Safety device | Primary circuit | Control thermistor | | °C | 1 to 80 | 1 to 80 | 1 to 80 | 1 to 80 | 1 to 80 | 1 to 80 |
| | | Pressure relief valve | | MPa | 0.3 | 0.3 | 0.3 | 0.3 | 0.3 | 0.3 |
| | | Flow sensor (Min. flow) | | L/min | 5.0 | 5.0 | 5.0 | 5.0 | 5.0 | 5.0 |
| | | BH manual reset thermostat | | °C | - | 90 | 90 | 90 | 90 | 90 |
| | | BH thermal Cut Off | | °C | - | 121 | 121 | 121 | 121 | 121 |
| | DHW tank | Control thermistor | | °C | 75 | 75 | 75 | 75 | 75 | 75 |
| | | IH manual reset thermostat | | °C | - | - | - | - | - | - |
| | | Temperature & pressure relief valve | | °C | - | - | - | - | - | - |
| | | | | MPa | 1.0 | 1.0 | 1.0 | 1.0 | 1.0 | 1.0 |
| Connections | Water | Primary circuit | | mm | φ28 | φ28 | φ28 | φ28 | φ28 | φ28 |
| | | DHW circuit | | mm | φ22 | φ22 | φ22 | φ22 | φ22 | φ22 |
| | Refrigerant | Gas | | mm | φ15.88 | φ15.88 | φ15.88 | φ15.88 | φ15.88 | φ15.88 |
| | | Liquid | | mm | φ9.52 | φ9.52 | φ9.52 | φ9.52 | φ9.52 | φ9.52 |
| Refrigerant *8 | | | | - | R410A | R410A | R410A | R410A | R410A | R410A |
| Guaranteed operating range *9 | Ambient | | | °C | 0 to 35 | 0 to 35 | 0 to 35 | 0 to 35 | 0 to 35 | 0 to 35 |
| | | | | %RH | ≦80 | ≦80 | ≦80 | ≦80 | ≦80 | ≦80 |
| | Outdoor temperature | Heating | | °C | See outdoor unit spec table | | | | | |
| | | Cooling | | °C | - | - | - | - | - | - |
| Operating range | Heating | Room temperature | | °C | 10 to 30 | 10 to 30 | 10 to 30 | 10 to 30 | 10 to 30 | 10 to 30 |
| | | Flow temperature | | °C | 20 to 60 | 20 to 60 | 20 to 60 | 20 to 60 | 20 to 60 | 20 to 60 |
| | Cooling | Room temperature | | °C | - | - | - | - | - | - |
| | | Flow temperature | | °C | - | - | - | - | - | - |
| | DHW *10 | | | °C | 40 to 60 | 40 to 60 | 40 to 60 | 40 to 60 | 40 to 60 | 40 to 60 |
| | Legionella prevention *10 | | | °C | 60 to 70 | 60 to 70 | 60 to 70 | 60 to 70 | 60 to 70 | 60 to 70 |
| Sound power level (PWL) | | | | dB(A) | 40 | 40 | 40 | 40 | 40 | 40 |

*1 Volume of sanitary water circuit, primary DHW circuit (from 3-way valve to confluent point with Heating circuit), piping to Expansion vessel, and Expansion vessel is not included in this value.
*2 When powered from independent source.
*3 Allowable flow rate range differs depending on connected outdoor unit. Please refer to section 4.6.4.
*4 If the water flow rate range exceeds maximum, the flow speed will be greater than 2.0 m/s, which could corrode the pipes.
*5 If the water flow is less than the minimum, the flow error will be activated.
*6 Hot water performance differs depending on connected outdoor unit.
*7 24h temperature decay at top of the tank from 65degC at ambient temperature 20degC (BS EN 12897)
*8 Refrigerant of outdoor unit connected to cylinder unit.
*9 The enviroment must be frost-free.
*10 For the model without both booster heater and immersion heater, the max. hot water temperature is [Max. outlet water of outdoor unit -3°C]. For the max. outlet of outdoor unit spec table.

# 2 Specifications

| Model name | | | | | EHST30C-MED | EHST30C-VM6ED | EHST30C-YM9ED | EHST30C-TM9ED |
|---|---|---|---|---|---|---|---|---|
| Dimensions | Without package | Height | mm | | 2050 | 2050 | 2050 | 2050 |
| | | Width | mm | | 595 | 595 | 595 | 595 |
| | | Depth | mm | | 680 | 680 | 680 | 680 |
| | With package | Height | mm | | 2320 | 2320 | 2320 | 2320 |
| | | Width | mm | | 660 | 660 | 660 | 660 |
| | | Depth | mm | | 800 | 800 | 800 | 800 |
| Casing | Munsell | | - | | 6.2PB 9/0.9 | 6.2PB 9/0.9 | 6.2PB 9/0.9 | 6.2PB 9/0.9 |
| | RAL code | | - | | 260 90 05 | 260 90 05 | 260 90 05 | 260 90 05 |
| | Material | | - | | Pre-coated metal | Pre-coated metal | Pre-coated metal | Pre-coated metal |
| Product weight (empty) | | | kg | | 120 | 122 | 124 | 124 |
| Product weight (full) | | | kg | | 428 | 430 | 434 | 434 |
| Gross weight | | | kg | | 139 | 141 | 143 | 143 |
| Water volume of heating circuit in the unit *1 | | | L | | 5.0 | 5.0 | 7.3 | 7.3 |
| Type of Installation | | | - | | Floor standing | Floor standing | Floor standing | Floor standing |
| Electrical data | Control board *2 (Including 4 pumps) | Power supply | Ph | | ~/N | ~/N | ~/N | ~/N |
| | | | V | | 230 | 230 | 230 | 230 |
| | | | Hz | | 50 | 50 | 50 | 50 |
| | | Input | kW | | 0.30 | 0.30 | 0.30 | 0.30 |
| | | Current | A | | 1.95 | 1.95 | 1.95 | 1.95 |
| | | Breaker | A | | 10 | 10 | 10 | 10 |
| | Booster heater | Power supply | Ph | | - | ~/N | 3~ | 3~ |
| | | | V | | - | 230 | 400 | 230 |
| | | | Hz | | - | 50 | 50 | 50 |
| | | Capacity | kW | | - | 2+4 | 3+6 | 3+6 |
| | | Heater step | - | | - | 3 | 3 | 3 |
| | | Current | A | | - | 26 | 13 | 23 |
| | | Breaker | A | | - | 32 | 16 | 32 |
| | Immersion heater | Power supply | Ph | | - | - | - | - |
| | | | V | | - | - | - | - |
| | | | Hz | | - | - | - | - |
| | | Capacity | kW | | - | - | - | - |
| | | Current | A | | - | - | - | - |
| | | Breaker | A | | - | - | - | - |
| Water circulation pump (Primary circuit) | Type | | - | | DC motor | DC motor | DC motor | DC motor |
| | Input (10/20/max L/min)*3 | Speed 1 | W | | 10/13/15 | 10/13/15 | 10/13/15 | 10/13/15 |
| | | Speed 2 | W | | 16/21/27 | 16/21/27 | 16/21/27 | 16/21/27 |
| | | Speed 3 | W | | 24/32/42 | 24/32/42 | 24/32/42 | 24/32/42 |
| | | Speed 4 | W | | 34/46/58 | 34/46/58 | 34/46/58 | 34/46/58 |
| | | Speed 5 | W | | 47/58/60 | 47/58/60 | 47/58/60 | 47/58/60 |
| Performance curve: please refer to section 4.6.4 | Current (10/20/max L/min)*3 | Speed 1 | A | | 0.2/0.2/0.3 | 0.2/0.2/0.3 | 0.2/0.2/0.3 | 0.2/0.2/0.3 |
| | | Speed 2 | A | | 0.2/0.3/0.4 | 0.2/0.3/0.4 | 0.2/0.3/0.4 | 0.2/0.3/0.4 |
| | | Speed 3 | A | | 0.3/0.4/0.5 | 0.3/0.4/0.5 | 0.3/0.4/0.5 | 0.3/0.4/0.5 |
| | | Speed 4 | A | | 0.4/0.5/0.6 | 0.4/0.5/0.6 | 0.4/0.5/0.6 | 0.4/0.5/0.6 |
| | | Speed 5 | A | | 0.5/0.6/0.6 | 0.5/0.6/0.6 | 0.5/0.6/0.6 | 0.5/0.6/0.6 |
| Water circulation pump (DHW circuit) | Input | Speed Ⅰ | W | | 58 | 58 | 58 | 58 |
| | | Speed Ⅱ (Default setting) | W | | 72 | 72 | 72 | 72 |
| | | Speed Ⅲ | W | | 83 | 83 | 83 | 83 |
| | Current | Speed Ⅰ | A | | 0.27 | 0.27 | 0.27 | 0.27 |
| | | Speed Ⅱ (Default setting) | A | | 0.33 | 0.33 | 0.33 | 0.33 |
| | | Speed Ⅲ | A | | 0.36 | 0.36 | 0.36 | 0.36 |
| | Flow rate | Speed Ⅰ | L/min | | 14.5 | 14.5 | 14.5 | 14.5 |
| | | Speed Ⅱ (Default setting) | L/min | | 21.0 | 21.0 | 21.0 | 21.0 |
| | | Speed Ⅲ | L/min | | 25.2 | 25.2 | 25.2 | 25.2 |
| Flow rate | Primary circuit | Max.*4 | L/min | | 36.9 | 36.9 | 36.9 | 36.9 |
| | | Min.*5 | L/min | | 5.0 | 5.0 | 5.0 | 5.0 |
| Heat exchanger | Refrigerant - Primary circuit water | | - | | MWA2-38PA-4 | MWA2-38PA-4 | MWA2-38PA-4 | MWA2-38PA-4 |
| | Primary circuit water - Domestic hot water | | - | | CBH18-24H | CBH18-24H | CBH18-24H | CBH18-24H |
| Domestic hot water tank | Volume | | L | | 300 | 300 | 300 | 300 |
| | Material | | - | | Duplex 2304 stainless steel (EN10088) | Duplex 2304 stainless steel (EN10088) | Duplex 2304 stainless steel (EN10088) | Duplex 2304 stainless steel (EN10088) |
| | Declared load profile | | - | | XL | XL | XL | XL |
| | Average climate | $\eta_{wh}$ (water heating efficiency) *6 | - | | 117 to 119 | 117 to 119 | 117 to 119 | 117 to 119 |
| | | $P_{es}$ (standby power input) *6 | kW | | 0.041 to 0.043 | 0.041 to 0.043 | 0.041 to 0.043 | 0.041 to 0.043 |
| | | Water heater energy efficiency class | - | | A | A | A | A |
| | | Heat loss *7 | kWh/24hr | | 2.27 | 2.27 | 2.27 | 2.27 |
| Expansion vessel (Primary circuit) | Volume | | L | | - | - | - | - |
| | Charge pressure | | MPa | | - | - | - | - |
| Safety device | Primary circuit | Control thermistor | °C | | 1 to 80 | 1 to 80 | 1 to 80 | 1 to 80 |
| | | Pressure relief valve | MPa | | 0.3 | 0.3 | 0.3 | 0.3 |
| | | Flow sensor (Min. flow) | L/min | | 5.0 | 5.0 | 5.0 | 5.0 |
| | | BH manual reset thermostat | °C | | - | - | 90 | 90 |
| | | BH thermal Cut Off | °C | | - | - | 121 | 121 |
| | DHW tank | Control thermistor | °C | | 75 | 75 | 75 | 75 |
| | | IH manual reset thermostat | °C | | - | - | - | - |
| | | Temperature & pressure relief valve | °C | | - | - | - | - |
| | | | MPa | | 1.0 | 1.0 | 1.0 | 1.0 |
| Connections | Water | Primary circuit | mm | | φ28 | φ28 | φ28 | φ28 |
| | | DHW circuit | mm | | φ22 | φ22 | φ22 | φ22 |
| | Refrigerant | Gas | mm | | φ15.88 | φ15.88 | φ15.88 | φ15.88 |
| | | Liquid | mm | | φ9.52 | φ9.52 | φ9.52 | φ9.52 |
| Refrigerant *8 | | | - | | R410A | R410A | R410A | R410A |
| Guaranteed operating range *9 | Ambient | | °C | | 0 to 35 | 0 to 35 | 0 to 35 | 0 to 35 |
| | | | %RH | | ≦80 | ≦80 | ≦80 | ≦80 |
| | Outdoor temperature | Heating | °C | | See outdoor unit spec table | | | |
| | | Cooling | °C | | - | - | - | - |
| Operating range | Heating | Room temperature | °C | | 10 to 30 | 10 to 30 | 10 to 30 | 10 to 30 |
| | | Flow temperature | °C | | 20 to 60 | 20 to 60 | 20 to 60 | 20 to 60 |
| | Cooling | Room temperature | °C | | - | - | - | - |
| | | Flow temperature | °C | | - | - | - | - |
| | DHW *10 | | °C | | 40 to 60 | 40 to 60 | 40 to 60 | 40 to 60 |
| | Legionella prevention *10 | | °C | | 60 to 70 | 60 to 70 | 60 to 70 | 60 to 70 |
| Sound power level (PWL) | | | dB(A) | | 40 | 40 | 40 | 40 |

*1 Volume of sanitary water circuit, primary DHW circuit (from 3-way valve to confluent point with Heating circuit), piping to Expansion vessel, and Expansion vessel is not included in this value.
*2 When powered from independent source.
*3 Allowable flow rate range differs depending on connected outdoor unit. Please refer to section 4.6.4.
*4 If the water flow rate range exceeds maximum, the flow speed will be greater than 2.0 m/s, which could corrode the pipes.
*5 If the water flow is less than the minimum, the flow error will be activated.
*6 Hot water performance differs depending on connected outdoor unit.
*7 24h temperature decay at top of the tank from 65degC at ambient temperature 20degC (BS EN 12897)
*8 Refrigerant of outdoor unit connected to cylinder unit.
*9 The enviroment must be frost-free.
*10 For the model without both booster heater and immersion heater, the max. hot water temperature is [Max. outlet water of outdoor unit -3°C]. For the max. outlet of outdoor unit spec table.

# 2 Specifications

| Model name | | | | ERST17D-VM2D | ERST17D-VM6D | ERST20D-VM2D | ERST20D-VM6D | ERST20D-YM9D | ERST30D-VM2ED |
|---|---|---|---|---|---|---|---|---|---|
| Dimensions | Without package | Height | mm | 1400 | 1400 | 1600 | 1600 | 1600 | 2050 |
| | | Width | mm | 595 | 595 | 595 | 595 | 595 | 595 |
| | | Depth | mm | 680 | 680 | 680 | 680 | 680 | 680 |
| | With package | Height | mm | 1670 | 1670 | 1850 | 1850 | 1850 | 2320 |
| | | Width | mm | 660 | 660 | 660 | 660 | 660 | 660 |
| | | Depth | mm | 800 | 800 | 800 | 800 | 800 | 800 |
| Casing | Munsell | | - | 6.2PB 9/0.9 | 6.2PB 9/0.9 | 6.2PB 9/0.9 | 6.2PB 9/0.9 | 6.2PB 9/0.9 | 6.2PB 9/0.9 |
| | RAL code | | - | 260 90 05 | 260 90 05 | 260 90 05 | 260 90 05 | 260 90 05 | 260 90 05 |
| | Material | | - | Pre-coated metal | Pre-coated metal | Pre-coated metal | Pre-coated metal | Pre-coated metal | Pre-coated metal |
| Product weight (empty) | | | kg | 94 | 94 | 100 | 100 | 102 | 115 |
| Product weight (full) | | | kg | 269 | 273 | 306 | 306 | 310 | 422 |
| Gross weight | | | kg | 109 | 110 | 117 | 117 | 119 | 134 |
| Water volume of heating circuit in the unit *1 | | | L | 3.4 | 5.7 | 3.5 | 3.5 | 5.8 | 3.9 |
| Type of Installation | | | - | Floor standing | Floor standing | Floor standing | Floor standing | Floor standing | Floor standing |
| Electrical data | Control board *2 (Including 4 pumps) | Power supply | Ph | ~/N | ~/N | ~/N | ~/N | ~/N | ~/N |
| | | | V | 230 | 230 | 230 | 230 | 230 | 230 |
| | | | Hz | 50 | 50 | 50 | 50 | 50 | 50 |
| | | Input | kW | 0.30 | 0.30 | 0.30 | 0.30 | 0.30 | 0.30 |
| | | Current | A | 1.95 | 1.95 | 1.95 | 1.95 | 1.95 | 1.95 |
| | | Breaker | A | 10 | 10 | 10 | 10 | 10 | 10 |
| | Booster heater | Power supply | Ph | ~/N | ~/N | ~/N | ~/N | 3~ | ~/N |
| | | | V | 230 | 230 | 230 | 230 | 400 | 230 |
| | | | Hz | 50 | 50 | 50 | 50 | 50 | 50 |
| | | Capacity | kW | 2 | 2+4 | 2 | 2+4 | 3+6 | 2 |
| | | Heater step | - | 1 | 3 | 1 | 3 | 3 | 1 |
| | | Current | A | 9 | 26 | 9 | 26 | 13 | 9 |
| | | Breaker | A | 16 | 32 | 16 | 32 | 16 | 16 |
| | Immersion heater | Power supply | Ph | - | - | - | - | - | - |
| | | | V | - | - | - | - | - | - |
| | | | Hz | - | - | - | - | - | - |
| | | Capacity | kW | - | - | - | - | - | - |
| | | Current | A | - | - | - | - | - | - |
| | | Breaker | A | - | - | - | - | - | - |
| Water circulation pump (Primary circuit) | Type | | - | DC motor | DC motor | DC motor | DC motor | DC motor | DC motor |
| | Input (10/20/max L/min)*3 | Speed 1 | W | 10/13/14 | 10/13/14 | 10/13/15 | 10/13/15 | 10/13/15 | 10/13/15 |
| | | Speed 2 | W | 16/21/24 | 16/21/24 | 16/21/27 | 16/21/27 | 16/21/27 | 16/21/27 |
| | | Speed 3 | W | 24/32/36 | 24/32/36 | 24/32/42 | 24/32/42 | 24/32/42 | 24/32/42 |
| | | Speed 4 | W | 34/46/54 | 34/46/54 | 34/46/58 | 34/46/58 | 34/46/58 | 34/46/58 |
| | | Speed 5 | W | 47/58/60 | 47/58/60 | 47/58/60 | 47/58/60 | 47/58/60 | 47/58/60 |
| Performance curve: please refer to section 4.6.4 | Current (10/20/max L/min)*3 | Speed 1 | A | 0.2/0.2/0.3 | 0.2/0.2/0.3 | 0.2/0.2/0.3 | 0.2/0.2/0.3 | 0.2/0.2/0.3 | 0.2/0.2/0.3 |
| | | Speed 2 | A | 0.2/0.3/0.4 | 0.2/0.3/0.4 | 0.2/0.3/0.4 | 0.2/0.3/0.4 | 0.2/0.3/0.4 | 0.2/0.3/0.4 |
| | | Speed 3 | A | 0.3/0.4/0.5 | 0.3/0.4/0.5 | 0.3/0.4/0.5 | 0.3/0.4/0.5 | 0.3/0.4/0.5 | 0.3/0.4/0.5 |
| | | Speed 4 | A | 0.4/0.5/0.6 | 0.4/0.5/0.6 | 0.4/0.5/0.6 | 0.4/0.5/0.6 | 0.4/0.5/0.6 | 0.4/0.5/0.6 |
| | | Speed 5 | A | 0.5/0.6/0.6 | 0.5/0.6/0.6 | 0.5/0.6/0.6 | 0.5/0.6/0.6 | 0.5/0.6/0.6 | 0.5/0.6/0.6 |
| Water circulation pump (DHW circuit) | Input | Speed Ⅰ | W | 55 | 55 | 55 | 55 | 55 | 58 |
| | | Speed Ⅱ (Default setting) | W | 69 | 69 | 69 | 69 | 69 | 72 |
| | | Speed Ⅲ | W | 80 | 80 | 80 | 80 | 80 | 83 |
| | Current | Speed Ⅰ | A | 0.25 | 0.25 | 0.25 | 0.25 | 0.25 | 0.27 |
| | | Speed Ⅱ (Default setting) | A | 0.31 | 0.31 | 0.31 | 0.31 | 0.31 | 0.33 |
| | | Speed Ⅲ | A | 0.34 | 0.34 | 0.34 | 0.34 | 0.34 | 0.36 |
| | Flow rate | Speed Ⅰ | L/min | 13.5 | 13.5 | 13.5 | 13.5 | 13.5 | 14.5 |
| | | Speed Ⅱ (Default setting) | L/min | 19.0 | 19.0 | 19.0 | 19.0 | 19.0 | 21.0 |
| | | Speed Ⅲ | L/min | 22.9 | 22.9 | 22.9 | 22.9 | 22.9 | 25.2 |
| Flow rate | Primary circuit | Max.*4 | L/min | 25.8 | 25.8 | 36.9 | 36.9 | 36.9 | 36.9 |
| | | Min.*5 | L/min | 5.0 | 5.0 | 5.0 | 5.0 | 5.0 | 5.0 |
| Heat exchanger | Refrigerant - Primary circuit water | | - | MWA1-44DM | MWA1-44DM | MWA1-44DM | MWA1-44DM | MWA1-44DM | MWA1-44DM |
| | Primary circuit water - Domestic hot water | | - | CBH18-18H | CBH18-18H | CBH18-18H | CBH18-18H | CBH18-18H | CBH18-24H |
| Domestic hot water tank | Volume | | L | 170 | 170 | 200 | 200 | 200 | 300 |
| | Material | | - | Duplex 2304 stainless steel (EN10088) | Duplex 2304 stainless steel (EN10088) | Duplex 2304 stainless steel (EN10088) | Duplex 2304 stainless steel (EN10088) | Duplex 2304 stainless steel (EN10088) | Duplex 2304 stainless steel (EN10088) |
| | Declared load profile | | - | L | L | L | L | L | XL |
| | Average climate | $\eta_{wh}$ (water heating efficiency) *6 | - | 135 to 148 | 135~148 | 141 to 159 | 141~159 | 141~159 | 119 to 128 |
| | | $P_{es}$ (standby power input) *6 | kW | 0.026 to 0.039 | 0.026~0.039 | 0.024 to 0.035 | 0.024~0.035 | 0.024~0.035 | 0.026 to 0.041 |
| | | Water heater energy efficiency class | - | A+ | A+ | A+ | A+ | A+ | A or A+ |
| | | Heat loss *7 | kWh/24hr | 1.65 | 1.65 | 1.89 | 1.89 | 1.89 | 2.27 |
| Expansion vessel (Primary circuit) | Volume | | L | 12 | 12 | 12 | 12 | 12 | - |
| | Charge pressure | | MPa | 0.1 | 0.1 | 0.1 | 0.1 | 0.1 | - |
| Safety device | Primary circuit | Control thermistor | °C | 1 to 80 | 1~80 | 1 to 80 | 1~80 | 1~80 | 1 to 80 |
| | | Pressure relief valve | MPa | 0.3 | 0.3 | 0.3 | 0.3 | 0.3 | 0.3 |
| | | Flow sensor (Min. flow) | L/min | 5.0 | 5.0 | 5.0 | 5.0 | 5.0 | 5.0 |
| | | BH manual reset thermostat | °C | 90 | 90 | 90 | 90 | 90 | 90 |
| | | BH thermal Cut Off | °C | 121 | 121 | 121 | 121 | 121 | 121 |
| | DHW tank | Control thermistor | °C | 75 | 75 | 75 | 75 | 75 | 75 |
| | | IH manual reset thermostat | °C | - | - | - | - | - | - |
| | | Temperature & pressure relief valve | °C | - | - | - | - | - | - |
| | | | MPa | 1.0 | 1.0 | 1.0 | 1.0 | 1.0 | 1.0 |
| Connections | Water | Primary circuit | mm | φ28 | φ28 | φ28 | φ28 | φ28 | φ28 |
| | | DHW circuit | mm | φ22 | φ22 | φ22 | φ22 | φ22 | φ22 |
| | Refrigerant | Gas | mm | φ12.7 | φ12.7 | φ12.7 | φ12.7 | φ12.7 | φ12.7 |
| | | Liquid | mm | φ6.35 | φ6.35 | φ6.35 | φ6.35 | φ6.35 | φ6.35 |
| Refrigerant *8 | | | - | R32/R410A | R32/R410A | R32/R410A | R32/R410A | R32/R410A | R32/R410A |
| Guaranteed operating range *9 | Ambient | | °C | 0 to 35 | 0~35 | 0 to 35 | 0~35 | 0~35 | 0 to 35 |
| | | | %RH | ≦80 | ≦80 | ≦80 | ≦80 | ≦80 | ≦80 |
| | Outdoor temperature | Heating | °C | See outdoor unit spec table | | | | | |
| | | Cooling | °C | 10 to 46 | 10~46 | 10 to 46 | 10~46 | 10~46 | 10 to 46 |
| Operating range | Heating | Room temperature | °C | 10 to 30 | 10~30 | 10 to 30 | 10~30 | 10~30 | 10 to 30 |
| | | Flow temperature | °C | 20 to 60 | 20~60 | 20 to 60 | 20~60 | 20~60 | 20 to 60 |
| | Cooling | Room temperature | °C | - | - | - | - | - | - |
| | | Flow temperature | °C | 5 to 25 | 5~25 | 5 to 25 | 5~25 | 5~25 | 5 to 25 |
| | DHW *10 | | °C | 40 to 60 | 40~60 | 40 to 60 | 40~60 | 40~60 | 40 to 60 |
| | Legionella prevention *10 | | °C | 60 to 70 | 60~70 | 60 to 70 | 60~70 | 60~70 | 60 to 70 |
| Sound power level (PWL) | | | dB(A) | 41 | 41 | 41 | 41 | 41 | 41 |

*1 Volume of sanitary water circuit, primary DHW circuit (from 3-way valve to confluent point with Heating circuit), piping to Expansion vessel, and Expansion vessel is not included in this value.
*2 When powered from independent source.
*3 Allowable flow rate range differs depending on connected outdoor unit. Please refer to section 4.6.4.
*4 If the water flow rate range exceeds maximum, the flow speed will be greater than 2.0 m/s, which could corrode the pipes.
*5 If the water flow is less than the minimum, the flow error will be activated.
*6 Hot water performance differs depending on connected outdoor unit.
*7 24h temperature decay at top of the tank from 65degC at ambient temperature 20degC (BS EN 12897)
*8 Refrigerant of outdoor unit connected to cylinder unit.
*9 The enviroment must be frost-free.
*10 For the model without both booster heater and immersion heater, the max. hot water temperature is [Max. outlet water of outdoor unit -3°C]. For the max. outllet of outdoor unit spec table.

# 2 Specifications

| Model name | | | | | ERST20C-VM2D | ERST20C-VM6D | ERST20C-YM9D | ERST30C-VM2ED | ERST30D-VM6ED | ERST30D-YM9ED |
|---|---|---|---|---|---|---|---|---|---|---|
| Dimensions | Without package | Height | mm | | 1600 | 1600 | 1600 | 2050 | 2050 | 2050 |
| | | Width | mm | | 595 | 595 | 595 | 595 | 595 | 595 |
| | | Depth | mm | | 680 | 680 | 680 | 680 | 680 | 680 |
| | With package | Height | mm | | 1850 | 1850 | 1850 | 2320 | 2320 | 2320 |
| | | Width | mm | | 660 | 660 | 660 | 660 | 660 | 660 |
| | | Depth | mm | | 800 | 800 | 800 | 800 | 800 | 800 |
| Casing | Munsell | | - | | 6.2PB 9/0.9 | 6.2PB 9/0.9 | 6.2PB 9/0.9 | 6.2PB 9/0.9 | 6.2PB 9/0.9 | 6.2PB 9/0.9 |
| | RAL code | | - | | 260 90 05 | 260 90 05 | 260 90 05 | 260 90 05 | 260 90 05 | 260 90 05 |
| | Material | | - | | Pre-coated metal | Pre-coated metal | Pre-coated metal | Pre-coated metal | Pre-coated metal | Pre-coated metal |
| Product weight (empty) | | | kg | | 100 | 111 | 112 | 120 | 116 | 117 |
| Product weight (full) | | | kg | | 317 | 318 | 322 | 428 | 423 | 426 |
| Gross weight | | | kg | | 127 | 128 | 129 | 139 | 135 | 137 |
| Water volume of heating circuit in the unit *1 | | | L | | 4.6 | 4.6 | 6.9 | 5.0 | 3.9 | 6.2 |
| Type of Installation | | | - | | Floor standing | Floor standing | Floor standing | Floor standing | Floor standing | Floor standing |
| Electrical data | Control board *2 (Including 4 pumps) | Power supply | Ph | | ~/N | ~/N | ~/N | ~/N | ~/N | ~/N |
| | | | V | | 230 | 230 | 230 | 230 | 230 | 230 |
| | | | Hz | | 50 | 50 | 50 | 50 | 50 | 50 |
| | | Input | kW | | 0.30 | 0.30 | 0.30 | 0.30 | 0.30 | 0.30 |
| | | Current | A | | 1.95 | 1.95 | 1.95 | 1.95 | 1.95 | 1.95 |
| | | Breaker | A | | 10 | 10 | 10 | 10 | 10 | 10 |
| | Booster heater | Power supply | Ph | | ~/N | ~/N | 3~ | ~/N | ~/N | 3~ |
| | | | V | | 230 | 230 | 400 | 230 | 230 | 400 |
| | | | Hz | | 50 | 50 | 50 | 50 | 50 | 50 |
| | | Capacity | kW | | 2 | 2+4 | 3+6 | 2 | 2+4 | 3+6 |
| | | Heater step | - | | 1 | 3 | 3 | 1 | 3 | 3 |
| | | Current | A | | 9 | 26 | 13 | 9 | 26 | 13 |
| | | Breaker | A | | 16 | 32 | 16 | 16 | 32 | 16 |
| | Immersion heater | Power supply | Ph | | - | - | - | - | - | - |
| | | | V | | - | - | - | - | - | - |
| | | | Hz | | - | - | - | - | - | - |
| | | Capacity | kW | | - | - | - | - | - | - |
| | | Current | A | | - | - | - | - | - | - |
| | | Breaker | A | | - | - | - | - | - | - |
| Water circulation pump (Primary circuit) | Type | | - | | DC motor | DC motor | DC motor | DC motor | DC motor | DC motor |
| | Input (10/20/max L/min)*3 | Speed 1 | W | | 10/13/15 | 10/13/15 | 10/13/15 | 10/13/15 | 10/13/15 | 10/13/15 |
| | | Speed 2 | W | | 16/21/27 | 16/21/27 | 16/21/27 | 16/21/27 | 16/21/27 | 16/21/27 |
| | | Speed 3 | W | | 24/32/42 | 24/32/42 | 24/32/42 | 24/32/42 | 24/32/42 | 24/32/42 |
| | | Speed 4 | W | | 34/46/58 | 34/46/58 | 34/46/58 | 34/46/58 | 34/46/58 | 34/46/58 |
| | | Speed 5 | W | | 47/58/60 | 47/58/60 | 47/58/60 | 47/58/60 | 47/58/60 | 47/58/60 |
| Performance curve: please refer to section 4.6.4 | Current (10/20/max L/min)*3 | Speed 1 | A | | 0.2/0.2/0.3 | 0.2/0.2/0.3 | 0.2/0.2/0.3 | 0.2/0.2/0.3 | 0.2/0.2/0.3 | 0.2/0.2/0.3 |
| | | Speed 2 | A | | 0.2/0.3/0.4 | 0.2/0.3/0.4 | 0.2/0.3/0.4 | 0.2/0.3/0.4 | 0.2/0.3/0.4 | 0.2/0.3/0.4 |
| | | Speed 3 | A | | 0.3/0.4/0.5 | 0.3/0.4/0.5 | 0.3/0.4/0.5 | 0.3/0.4/0.5 | 0.3/0.4/0.5 | 0.3/0.4/0.5 |
| | | Speed 4 | A | | 0.4/0.5/0.6 | 0.4/0.5/0.6 | 0.4/0.5/0.6 | 0.4/0.5/0.6 | 0.4/0.5/0.6 | 0.4/0.5/0.6 |
| | | Speed 5 | A | | 0.5/0.6/0.6 | 0.5/0.6/0.6 | 0.5/0.6/0.6 | 0.5/0.6/0.6 | 0.5/0.6/0.6 | 0.5/0.6/0.6 |
| Water circulation pump (DHW circuit) | Input | Speed Ⅰ | W | | 58 | 58 | 58 | 58 | 58 | 58 |
| | | Speed Ⅱ (Default setting) | W | | 72 | 72 | 72 | 72 | 72 | 72 |
| | | Speed Ⅲ | W | | 83 | 83 | 83 | 83 | 83 | 83 |
| | Current | Speed Ⅰ | A | | 0.27 | 0.27 | 0.27 | 0.27 | 0.27 | 0.27 |
| | | Speed Ⅱ (Default setting) | A | | 0.33 | 0.33 | 0.33 | 0.33 | 0.33 | 0.33 |
| | | Speed Ⅲ | A | | 0.36 | 0.36 | 0.36 | 0.36 | 0.36 | 0.36 |
| | Flow rate | Speed Ⅰ | L/min | | 14.5 | 14.5 | 14.5 | 14.5 | 14.5 | 14.5 |
| | | Speed Ⅱ (Default setting) | L/min | | 21.0 | 21.0 | 21.0 | 21.0 | 21.0 | 21.0 |
| | | Speed Ⅲ | L/min | | 25.2 | 25.2 | 25.2 | 25.2 | 25.2 | 25.2 |
| Flow rate | Primary circuit | Max.*4 | L/min | | 36.9 | 36.9 | 36.9 | 36.9 | 36.9 | 36.9 |
| | | Min.*5 | L/min | | 5.0 | 5.0 | 5.0 | 5.0 | 5.0 | 5.0 |
| Heat exchanger | Refrigerant - Primary circuit water | | - | | MWA2-38PA-4 | MWA2-38PA-4 | MWA2-38PA-4 | MWA2-38PA-4 | MWA1-44DM | MWA1-44DM |
| | Primary circuit water - Domestic hot water | | - | | CBH18-24H | CBH18-24H | CBH18-24H | CBH18-24H | CBH18-24H | CBH18-24H |
| Domestic hot water tank | Volume | | L | | 200 | 200 | 200 | 300 | 300 | 300 |
| | Material | | - | | Duplex 2304 stainless steel (EN10088) | Duplex 2304 stainless steel (EN10088) | Duplex 2304 stainless steel (EN10088) | Duplex 2304 stainless steel (EN10088) | Duplex 2304 stainless steel (EN10088) | Duplex 2304 stainless steel (EN10088) |
| | Declared load profile | | - | | L | L | L | XL | XL | XL |
| | Average climate | $\eta_{wh}$ (water heating efficiency) *6 | - | | 139 to 145 | 139~145 | 139~145 | 117 to 119 | 119~128 | 119~128 |
| | | $P_{es}$ (standby power input) *6 | kW | | 0.035 | 0.035 | 0.035 | 0.041 to 0.043 | 0.026~0.041 | 0.026~0.041 |
| | | Water heater energy efficiency class | - | | A+ | A+ | A+ | A | A~A+ | A~A+ |
| | | Heat loss *7 | kWh/24hr | | 1.89 | 1.89 | 1.89 | 2.27 | 2.27 | 2.27 |
| Expansion vessel (Primary circuit) | Volume | | L | | 12 | 12 | 12 | - | - | - |
| | Charge pressure | | MPa | | 0.1 | 0.1 | 0.1 | - | - | - |
| Safety device | Primary circuit | Control thermistor | °C | | 1 to 80 | 1~80 | 1~80 | 1 to 80 | 1~80 | 1~80 |
| | | Pressure relief valve | MPa | | 0.3 | 0.3 | 0.3 | 0.3 | 0.3 | 0.3 |
| | | Flow sensor (Min. flow) | L/min | | 5.0 | 5.0 | 5.0 | 5.0 | 5.0 | 5.0 |
| | | BH manual reset thermostat | °C | | 90 | 90 | 90 | 90 | 90 | 90 |
| | | BH thermal Cut Off | °C | | 121 | 121 | 121 | 121 | 121 | 121 |
| | DHW tank | Control thermistor | °C | | 75 | 75 | 75 | 75 | 75 | 75 |
| | | IH manual reset thermostat | °C | | - | - | - | - | - | - |
| | | Temperature & pressure relief valve | °C | | - | - | - | - | - | - |
| | | | MPa | | 1.0 | 1.0 | 1.0 | 1.0 | 1.0 | 1.0 |
| Connections | Water | Primary circuit | mm | | φ28 | φ28 | φ28 | φ28 | φ28 | φ28 |
| | | DHW circuit | mm | | φ22 | φ22 | φ22 | φ22 | φ22 | φ22 |
| | Refrigerant | Gas | mm | | φ15.88 | φ15.88 | φ15.88 | φ15.88 | φ12.7 | φ12.7 |
| | | Liquid | mm | | φ9.52 | φ9.52 | φ9.52 | φ9.52 | φ6.35 | φ6.35 |
| Refrigerant *8 | | | - | | R410A | R410A | R410A | R410A | R32/R410A | R32/R410A |
| Guaranteed operating range *9 | Ambient | | °C | | 0 to 35 | 0~35 | 0~35 | 0 to 35 | 0~35 | 0~35 |
| | | | %RH | | ≦80 | ≦80 | ≦80 | ≦80 | ≦80 | ≦80 |
| | Outdoor temperature | Heating | °C | | See outdoor unit spec table | | | | | |
| | | Cooling | °C | | 10 to 46 | 10~46 | 10~46 | 10 to 46 | 10~46 | 10~46 |
| Operating range | Heating | Room temperature | °C | | 10 to 30 | 10~30 | 10~30 | 10 to 30 | 10~30 | 10~30 |
| | | Flow temperature | °C | | 20 to 60 | 20~60 | 20~60 | 20 to 60 | 20~60 | 20~60 |
| | Cooling | Room temperature | °C | | - | - | - | - | - | - |
| | | Flow temperature | °C | | 5 to 25 | 5~25 | 5~25 | 5 to 25 | 5~25 | 5~25 |
| | DHW *10 | | °C | | 40 to 60 | 40~60 | 40~60 | 40 to 60 | 40~60 | 40~60 |
| | Legionella prevention *10 | | °C | | 60 to 70 | 60~70 | 60~70 | 60 to 70 | 60~70 | 60~70 |
| Sound power level (PWL) | | | dB(A) | | 40 | 40 | 40 | 40 | 41 | 41 |

*1 Volume of sanitary water circuit, primary DHW circuit (from 3-way valve to confluent point with Heating circuit), piping to Expansion vessel, and Expansion vessel is not included in this value.
*2 When powered from independent source.
*3 Allowable flow rate range differs depending on connected outdoor unit. Please refer to section 4.6.4.
*4 If the water flow rate range exceeds maximum, the flow speed will be greater than 2.0 m/s, which could corrode the pipes.
*5 If the water flow is less than the minimum, the flow error will be activated.
*6 Hot water performance differs depending on connected outdoor unit.
*7 24h temperature decay at top of the tank from 65degC at ambient temperature 20degC (BS EN 12897)
*8 Refrigerant of outdoor unit connected to cylinder unit.
*9 The enviroment must be frost-free.
*10 For the model without both booster heater and immersion heater, the max. hot water temperature is [Max. outlet water of outdoor unit -3°C]. For the max. outlet of outdoor unit spec table.

# 2 Specifications

| Model name | | | | | EHPT17X-VM2D | EHPT17X-VM6D | EHPT17X-YM9D | ERPT17X-VM2D | EHPT20X-MED | EHPT20X-VM6D |
|---|---|---|---|---|---|---|---|---|---|---|
| Dimensions | Without package | Height | mm | | 1400 | 1400 | 1400 | 1400 | 1600 | 1600 |
| | | Width | mm | | 595 | 595 | 595 | 595 | 595 | 595 |
| | | Depth | mm | | 680 | 680 | 680 | 680 | 680 | 680 |
| | With package | Height | mm | | 1670 | 1670 | 1670 | 1670 | 1850 | 1850 |
| | | Width | mm | | 660 | 660 | 660 | 660 | 660 | 660 |
| | | Depth | mm | | 800 | 800 | 800 | 800 | 800 | 800 |
| Casing | Munsell | | - | | 6.2PB 9/0.9 | 6.2PB 9/0.9 | 6.2PB 9/0.9 | 6.2PB 9/0.9 | 6.2PB 9/0.9 | 6.2PB 9/0.9 |
| | RAL code | | - | | 260 90 05 | 260 90 05 | 260 90 05 | 260 90 05 | 260 90 05 | 260 90 05 |
| | Material | | - | | Pre-coated metal | Pre-coated metal | Pre-coated metal | Pre-coated metal | Pre-coated metal | Pre-coated metal |
| Product weight (empty) | | | kg | | 86 | 87 | 89 | 87 | 87 | 94 |
| Product weight (full) | | | kg | | 262 | 263 | 267 | 262 | 293 | 301 |
| Gross weight | | | kg | | 102 | 103 | 104 | 102 | 104 | 111 |
| Water volume of heating circuit in the unit *1 | | | L | | 3.2 | 3.2 | 5.5 | 3.2 | 3.7 | 3.7 |
| Type of Installation | | | - | | Floor standing | Floor standing | Floor standing | Floor standing | Floor standing | Floor standing |
| Electrical data | Control board *2 (Including 4 pumps) | Power supply | Ph | | ~/N | ~/N | ~/N | ~/N | ~/N | ~/N |
| | | | V | | 230 | 230 | 230 | 230 | 230 | 230 |
| | | | Hz | | 50 | 50 | 50 | 50 | 50 | 50 |
| | | Input | kW | | 0.30 | 0.30 | 0.30 | 0.30 | 0.30 | 0.30 |
| | | Current | A | | 1.95 | 1.95 | 1.95 | 1.95 | 1.95 | 1.95 |
| | | Breaker | A | | 10 | 10 | 10 | 10 | 10 | 10 |
| | Booster heater | Power supply | Ph | | ~/N | ~/N | 3~ | ~/N | - | ~/N |
| | | | V | | 230 | 230 | 400 | 230 | - | 230 |
| | | | Hz | | 50 | 50 | 50 | 50 | - | 50 |
| | | Capacity | kW | | 2 | 2+4 | 3+6 | 2 | - | 2+4 |
| | | Heater step | - | | 1 | 3 | 3 | 1 | - | 3 |
| | | Current | A | | 9 | 26 | 13 | 9 | - | 26 |
| | | Breaker | A | | 16 | 32 | 16 | 16 | - | 32 |
| | Immersion heater | Power supply | Ph | | - | - | - | - | - | - |
| | | | V | | - | - | - | - | - | - |
| | | | Hz | | - | - | - | - | - | - |
| | | Capacity | kW | | - | - | - | - | - | - |
| | | Current | A | | - | - | - | - | - | - |
| | | Breaker | A | | - | - | - | - | - | - |
| Water circulation pump (Primary circuit) | Type | | - | | DC motor | DC motor | DC motor | DC motor | DC motor | DC motor |
| | Input (10/20/max L/min)*3 | Speed 1 | W | | 10/13/14 | 10/13/14 | 10/13/14 | 10/13/14 | 10/13/15 | 10/13/15 |
| | | Speed 2 | W | | 16/21/24 | 16/21/24 | 16/21/24 | 16/21/24 | 16/21/27 | 16/21/27 |
| | | Speed 3 | W | | 24/32/36 | 24/32/36 | 24/32/36 | 24/32/36 | 24/32/42 | 24/32/42 |
| | | Speed 4 | W | | 34/46/54 | 34/46/54 | 34/46/54 | 34/46/54 | 34/46/58 | 34/46/58 |
| | | Speed 5 | W | | 47/58/60 | 47/58/60 | 47/58/60 | 47/58/60 | 47/58/60 | 47/58/60 |
| Performance curve: please refer to section 4.6.4 | Current (10/20/max L/min)*3 | Speed 1 | A | | 0.2/0.2/0.3 | 0.2/0.2/0.3 | 0.2/0.2/0.3 | 0.2/0.2/0.3 | 0.2/0.2/0.3 | 0.2/0.2/0.3 |
| | | Speed 2 | A | | 0.2/0.3/0.4 | 0.2/0.3/0.4 | 0.2/0.3/0.4 | 0.2/0.3/0.4 | 0.2/0.3/0.4 | 0.2/0.3/0.4 |
| | | Speed 3 | A | | 0.3/0.4/0.5 | 0.3/0.4/0.5 | 0.3/0.4/0.5 | 0.3/0.4/0.5 | 0.3/0.4/0.5 | 0.3/0.4/0.5 |
| | | Speed 4 | A | | 0.4/0.5/0.6 | 0.4/0.5/0.6 | 0.4/0.5/0.6 | 0.4/0.5/0.6 | 0.4/0.5/0.6 | 0.4/0.5/0.6 |
| | | Speed 5 | A | | 0.5/0.6/0.6 | 0.5/0.6/0.6 | 0.5/0.6/0.6 | 0.5/0.6/0.6 | 0.5/0.6/0.6 | 0.5/0.6/0.6 |
| Water circulation pump (DHW circuit) | Input | Speed Ⅰ | W | | 55 | 55 | 55 | 55 | 58 | 58 |
| | | Speed Ⅱ (Default setting) | W | | 69 | 69 | 69 | 69 | 72 | 72 |
| | | Speed Ⅲ | W | | 80 | 80 | 80 | 80 | 83 | 83 |
| | Current | Speed Ⅰ | A | | 0.25 | 0.25 | 0.25 | 0.25 | 0.27 | 0.27 |
| | | Speed Ⅱ (Default setting) | A | | 0.31 | 0.31 | 0.31 | 0.31 | 0.33 | 0.33 |
| | | Speed Ⅲ | A | | 0.34 | 0.34 | 0.34 | 0.34 | 0.36 | 0.36 |
| | Flow rate | Speed Ⅰ | L/min | | 13.5 | 13.5 | 13.5 | 13.5 | 14.5 | 14.5 |
| | | Speed Ⅱ (Default setting) | L/min | | 19.0 | 19.0 | 19.0 | 19.0 | 21.0 | 21.0 |
| | | Speed Ⅲ | L/min | | 22.9 | 22.9 | 22.9 | 22.9 | 25.2 | 25.2 |
| Flow rate | Primary circuit | Max.*4 | L/min | | 25.8 | 25.8 | 25.8 | 25.8 | 36.9 | 36.9 |
| | | Min.*5 | L/min | | 5.0 | 5.0 | 5.0 | 5.0 | 5.0 | 5.0 |
| Heat exchanger | Refrigerant - Primary circuit water | | - | | - | - | - | - | - | - |
| | Primary circuit water - Domestic hot water | | - | | CBH18-18H | CBH18-18H | CBH18-18H | CBH18-18H | CBH18-24H | CBH18-24H |
| Domestic hot water tank | Volume | | L | | 170 | 170 | 170 | 170 | 200 | 200 |
| | Material | | - | | Duplex 2304 stainless steel (EN10088) | Duplex 2304 stainless steel (EN10088) | Duplex 2304 stainless steel (EN10088) | Duplex 2304 stainless steel (EN10088) | Duplex 2304 stainless steel (EN10088) | Duplex 2304 stainless steel (EN10088) |
| | Declared load profile | | - | | L | L | L | L | L | L |
| | Average climate | $\eta_{wh}$ (water heating efficiency) *6 | - | | 120 | 120 | 120 | 120 | 135 to 148 | 135 to 148 |
| | | $P_{es}$ (standby power input) *6 | kW | | 0.039 | 0.039 | 0.039 | 0.039 | 0.035 to 0.037 | 0.035 to 0.037 |
| | | Water heater energy efficiency class | - | | A+ | A+ | A+ | A+ | A+ | A+ |
| | | Heat loss *7 | kWh/24hr | | 1.65 | 1.65 | 1.65 | 1.65 | 1.89 | 1.89 |
| Expansion vessel (Primary circuit) | Volume | | L | | 12 | 12 | 12 | 12 | - | 12 |
| | Charge pressure | | MPa | | 0.1 | 0.1 | 0.1 | 0.1 | - | 0.1 |
| Safety device | Primary circuit | Control thermistor | °C | | 1 to 80 | 1 to 80 | 1 to 80 | 1 to 80 | 1 to 80 | 1 to 80 |
| | | Pressure relief valve | MPa | | 0.3 | 0.3 | 0.3 | 0.3 | 0.3 | 0.3 |
| | | Flow sensor (Min. flow) | L/min | | 5.0 | 5.0 | 5.0 | 5.0 | 5.0 | 5.0 |
| | | BH manual reset thermostat | °C | | 90 | 90 | 90 | 90 | - | 90 |
| | | BH thermal Cut Off | °C | | 121 | 121 | 121 | 121 | - | 121 |
| | DHW tank | Control thermistor | °C | | 75 | 75 | 75 | 75 | 75 | 75 |
| | | IH manual reset thermostat | °C | | - | - | - | - | - | - |
| | | Temperature & pressure relief valve | °C | | - | - | - | - | - | - |
| | | | MPa | | 1.0 | 1.0 | 1.0 | 1.0 | 1.0 | 1.0 |
| Connections | Water | Primary circuit | mm | | φ28 | φ28 | φ28 | φ28 | φ28 | φ28 |
| | | DHW circuit | mm | | φ22 | φ22 | φ22 | φ22 | φ22 | φ22 |
| | Refrigerant | Gas | mm | | - | - | - | - | - | - |
| | | Liquid | mm | | - | - | - | - | - | - |
| Refrigerant *8 | | | - | | R32 | R32 | R32 | R32 | R32 | R32 |
| Guaranteed operating range *9 | Ambient | | °C | | 0 to 35 | 0 to 35 | 0 to 35 | 0 to 35 | 0 to 35 | 0 to 35 |
| | | | %RH | | ≦80 | ≦80 | ≦80 | ≦80 | ≦80 | ≦80 |
| | Outdoor temperature | Heating | °C | | See outdoor unit spec table | | | | | |
| | | Cooling | °C | | - | - | - | 10 to 46 | - | - |
| Operating range | Heating | Room temperature | °C | | 10 to 30 | 10 to 30 | 10 to 30 | 10 to 30 | 10 to 30 | 10 to 30 |
| | | Flow temperature | °C | | 20 to 60 | 20 to 60 | 20 to 60 | 20 to 60 | 20 to 60 | 20 to 60 |
| | Cooling | Room temperature | °C | | - | - | - | - | - | - |
| | | Flow temperature | °C | | - | - | - | 5 to 25 | - | - |
| | DHW *10 | | °C | | 40 to 60 | 40 to 60 | 40 to 60 | 40 to 60 | 40 to 60 | 40 to 60 |
| | Legionella prevention *10 | | °C | | 60 to 70 | 60 to 70 | 60 to 70 | 60 to 70 | 60 to 70 | 60 to 70 |
| Sound power level (PWL) | | | dB(A) | | 40 | 40 | 40 | 40 | 40 | 40 |

*1 Volume of sanitary water circuit, primary DHW circuit (from 3-way valve to confluent point with Heating circuit), piping to Expansion vessel, and Expansion vessel is not included in this value.
*2 When powered from independent source.
*3 Allowable flow rate range differs depending on connected outdoor unit. Please refer to section 4.6.4.
*4 If the water flow rate range exceeds maximum, the flow speed will be greater than 2.0 m/s, which could corrode the pipes.
*5 If the water flow is less than the minimum, the flow error will be activated.
*6 Hot water performance differs depending on connected outdoor unit.
*7 24h temperature decay at top of the tank from 65degC at ambient temperature 20degC (BS EN 12897)
*8 Refrigerant of outdoor unit connected to cylinder unit.
*9 The enviroment must be frost-free.
*10 For the model without both booster heater and immersion heater, the max. hot water temperature is [Max. outlet water of outdoor unit -3°C]. For the max. outlet of outdoor unit spec table.

# 2 Specifications

| Model name | | | | EHPT20X-YM9D | EHPT20X-YM9ED | EHPT20X-TM9D | EHPT20X-MHEDW | ERPT20X-MD | ERPT20X-VM2D |
|---|---|---|---|---|---|---|---|---|---|
| Dimensions | Without package | Height | mm | 1600 | 1600 | 1600 | 1600 | 1600 | 1600 |
| | | Width | mm | 595 | 595 | 595 | 595 | 595 | 595 |
| | | Depth | mm | 680 | 680 | 680 | 680 | 680 | 680 |
| | With package | Height | mm | 1850 | 1850 | 1850 | 1850 | 1850 | 1850 |
| | | Width | mm | 660 | 660 | 660 | 660 | 660 | 660 |
| | | Depth | mm | 800 | 800 | 800 | 800 | 800 | 800 |
| Casing | Munsell | | - | 6.2PB 9/0.9 | 6.2PB 9/0.9 | 6.2PB 9/0.9 | 6.2PB 9/0.9 | 6.2PB 9/0.9 | 6.2PB 9/0.9 |
| | RAL code | | - | 260 90 05 | 260 90 05 | 260 90 05 | 260 90 05 | 260 90 05 | 260 90 05 |
| | Material | | - | Pre-coated metal | Pre-coated metal | Pre-coated metal | Pre-coated metal | Pre-coated metal | Pre-coated metal |
| Product weight (empty) | | | kg | 96 | 90 | 96 | 94 | 93 | 94 |
| Product weight (full) | | | kg | 304 | 299 | 304 | 300 | 299 | 300 |
| Gross weight | | | kg | 113 | 107 | 113 | 111 | 110 | 111 |
| Water volume of heating circuit in the unit *1 | | | L | 6.0 | 6.0 | 6.0 | 3.7 | 3.7 | 3.7 |
| Type of Installation | | | - | Floor standing | Floor standing | Floor standing | Floor standing | Floor standing | Floor standing |
| Electrical data | Control board *2 (Including 4 pumps) | Power supply | Ph | ~/N | ~/N | ~/N | ~/N | ~/N | ~/N |
| | | | V | 230 | 230 | 230 | 230 | 230 | 230 |
| | | | Hz | 50 | 50 | 50 | 50 | 50 | 50 |
| | | Input | kW | 0.30 | 0.30 | 0.30 | 0.30 | 0.30 | 0.30 |
| | | Current | A | 1.95 | 1.95 | 1.95 | 1.95 | 1.95 | 1.95 |
| | | Breaker | A | 10 | 10 | 10 | 10 | 10 | 10 |
| | Booster heater | Power supply | Ph | 3~ | 3~ | 3~ | - | - | ~/N |
| | | | V | 400 | 400 | 230 | - | - | 230 |
| | | | Hz | 50 | 50 | 50 | - | - | 50 |
| | | Capacity | kW | 3+6 | 3+6 | 3+6 | - | - | 2 |
| | | Heater step | - | 3 | 3 | 3 | - | - | 1 |
| | | Current | A | 13 | 13 | 23 | - | - | 9 |
| | | Breaker | A | 16 | 16 | 32 | - | - | 16 |
| | Immersion heater | Power supply | Ph | - | - | - | ~/N | - | - |
| | | | V | - | - | - | 230 | - | - |
| | | | Hz | - | - | - | 50 | - | - |
| | | Capacity | kW | - | - | - | 3 | - | - |
| | | Current | A | - | - | - | 13 | - | - |
| | | Breaker | A | - | - | - | 16 | - | - |
| Water circulation pump (Primary circuit) | Type | | - | DC motor | DC motor | DC motor | DC motor | DC motor | DC motor |
| | Input (10/20/max L/min)*3 | Speed 1 | W | 10/13/15 | 10/13/15 | 10/13/15 | 10/13/15 | 10/13/15 | 10/13/15 |
| | | Speed 2 | W | 16/21/27 | 16/21/27 | 16/21/27 | 16/21/27 | 16/21/27 | 16/21/27 |
| | | Speed 3 | W | 24/32/42 | 24/32/42 | 24/32/42 | 24/32/42 | 24/32/42 | 24/32/42 |
| | | Speed 4 | W | 34/46/58 | 34/46/58 | 34/46/58 | 34/46/58 | 34/46/58 | 34/46/58 |
| | | Speed 5 | W | 47/58/60 | 47/58/60 | 47/58/60 | 47/58/60 | 47/58/60 | 47/58/60 |
| Performance curve: please refer to section 4.6.4 | Current (10/20/max L/min)*3 | Speed 1 | A | 0.2/0.2/0.3 | 0.2/0.2/0.3 | 0.2/0.2/0.3 | 0.2/0.2/0.3 | 0.2/0.2/0.3 | 0.2/0.2/0.3 |
| | | Speed 2 | A | 0.2/0.3/0.4 | 0.2/0.3/0.4 | 0.2/0.3/0.4 | 0.2/0.3/0.4 | 0.2/0.3/0.4 | 0.2/0.3/0.4 |
| | | Speed 3 | A | 0.3/0.4/0.5 | 0.3/0.4/0.5 | 0.3/0.4/0.5 | 0.3/0.4/0.5 | 0.3/0.4/0.5 | 0.3/0.4/0.5 |
| | | Speed 4 | A | 0.4/0.5/0.6 | 0.4/0.5/0.6 | 0.4/0.5/0.6 | 0.4/0.5/0.6 | 0.4/0.5/0.6 | 0.4/0.5/0.6 |
| | | Speed 5 | A | 0.5/0.6/0.6 | 0.5/0.6/0.6 | 0.5/0.6/0.6 | 0.5/0.6/0.6 | 0.5/0.6/0.6 | 0.5/0.6/0.6 |
| Water circulation pump (DHW circuit) | Input | Speed Ⅰ | W | 58 | 58 | 58 | 58 | 58 | 58 |
| | | Speed Ⅱ (Default setting) | W | 72 | 72 | 72 | 72 | 72 | 72 |
| | | Speed Ⅲ | W | 83 | 83 | 83 | 83 | 83 | 83 |
| | Current | Speed Ⅰ | A | 0.27 | 0.27 | 0.27 | 0.27 | 0.27 | 0.27 |
| | | Speed Ⅱ (Default setting) | A | 0.33 | 0.33 | 0.33 | 0.33 | 0.33 | 0.33 |
| | | Speed Ⅲ | A | 0.36 | 0.36 | 0.36 | 0.36 | 0.36 | 0.36 |
| | Flow rate | Speed Ⅰ | L/min | 14.5 | 14.5 | 14.5 | 14.5 | 14.5 | 14.5 |
| | | Speed Ⅱ (Default setting) | L/min | 21.0 | 21.0 | 21.0 | 21.0 | 21.0 | 21.0 |
| | | Speed Ⅲ | L/min | 25.2 | 25.2 | 25.2 | 25.2 | 25.2 | 25.2 |
| Flow rate | Primary circuit | Max.*4 | L/min | 36.9 | 36.9 | 36.9 | 36.9 | 36.9 | 36.9 |
| | | Min.*5 | L/min | 5.0 | 5.0 | 5.0 | 5.0 | 5.0 | 5.0 |
| Heat exchanger | Refrigerant - Primary circuit water | | - | - | - | - | - | - | - |
| | Primary circuit water - Domestic hot water | | - | CBH18-24H | CBH18-24H | CBH18-24H | CBH18-24H | CBH18-24H | CBH18-24H |
| Domestic hot water tank | Volume | | L | 200 | 200 | 200 | 200 | 200 | 200 |
| | Material | | - | Duplex 2304 stainless steel (EN10088) | Duplex 2304 stainless steel (EN10088) | Duplex 2304 stainless steel (EN10088) | Duplex 2101 stainless steel (EN10088) | Duplex 2304 stainless steel (EN10088) | Duplex 2304 stainless steel (EN10088) |
| | Declared load profile | | - | L | L | L | L | L | L |
| | Average climate | $\eta_{wh}$ (water heating efficiency) *6 | - | 135 to 148 | 135 to 148 | 135 to 148 | 135 to 148 | 135 to 148 | 135 to 148 |
| | | $P_{es}$ (standby power input) *6 | kW | 0.035 to 0.037 | 0.035 to 0.037 | 0.035 to 0.037 | 0.035 to 0.037 | 0.035 to 0.037 | 0.035 to 0.037 |
| | | Water heater energy efficiency class | - | A+ | A+ | A+ | A+ | A+ | A+ |
| | | Heat loss *7 | kWh/24hr | 1.89 | 1.89 | 1.89 | 1.89 | 1.89 | 1.89 |
| Expansion vessel (Primary circuit) | Volume | | L | 12 | - | 12 | - | 12 | 12 |
| | Charge pressure | | MPa | 0.1 | - | 0.1 | - | 0.1 | 0.1 |
| Safety device | Primary circuit | Control thermistor | °C | 1 to 80 | 1 to 80 | 1 to 80 | 1 to 80 | 1 to 80 | 1 to 80 |
| | | Pressure relief valve | MPa | 0.3 | 0.3 | 0.3 | 0.3 | 0.3 | 0.3 |
| | | Flow sensor (Min. flow) | L/min | 5.0 | 5.0 | 5.0 | 5.0 | 5.0 | 5.0 |
| | | BH manual reset thermostat | °C | 90 | 90 | 90 | - | - | 90 |
| | | BH thermal Cut Off | °C | 121 | 121 | 121 | - | - | 121 |
| | DHW tank | Control thermistor | °C | 75 | 75 | 75 | 75 | 75 | 75 |
| | | IH manual reset thermostat | °C | - | - | - | 85 | - | - |
| | | Temperature & pressure relief valve | °C | - | - | - | 90 | - | - |
| | | | MPa | 1.0 | 1.0 | 1.0 | 0.7 | 1.0 | 1.0 |
| Connections | Water | Primary circuit | mm | φ28 | φ28 | φ28 | φ28 | φ28 | φ28 |
| | | DHW circuit | mm | φ22 | φ22 | φ22 | φ22 | φ22 | φ22 |
| | Refrigerant | Gas | mm | - | - | - | - | - | - |
| | | Liquid | mm | - | - | - | - | - | - |
| Refrigerant *8 | | | - | R32 | R32 | R32 | R32 | R32 | R32 |
| Guaranteed operating range *9 | Ambient | | °C | 0 to 35 | 0 to 35 | 0 to 35 | 0 to 35 | 0 to 35 | 0 to 35 |
| | | | %RH | ≦80 | ≦80 | ≦80 | ≦80 | ≦80 | ≦80 |
| | Outdoor temperature | Heating | °C | See outdoor unit spec table | | | | | |
| | | Cooling | °C | - | - | - | - | 10 to 46 | 10 to 46 |
| Operating range | Heating | Room temperature | °C | 10 to 30 | 10 to 30 | 10 to 30 | 10 to 30 | 10 to 30 | 10 to 30 |
| | | Flow temperature | °C | 20 to 60 | 20 to 60 | 20 to 60 | 20 to 60 | 20 to 60 | 20 to 60 |
| | Cooling | Room temperature | °C | - | - | - | - | - | - |
| | | Flow temperature | °C | - | - | - | - | 5 to 25 | 5 to 25 |
| | DHW *10 | | °C | 40 to 60 | 40 to 60 | 40 to 60 | 40 to 60 | 40 to 60 | 40 to 60 |
| | Legionella prevention *10 | | °C | 60 to 70 | 60 to 70 | 60 to 70 | 60 to 70 | 60 to 70 | 60 to 70 |
| Sound power level (PWL) | | | dB(A) | 40 | 40 | 40 | 40 | 40 | 40 |

*1 Volume of sanitary water circuit, primary DHW circuit (from 3-way valve to confluent point with Heating circuit), piping to Expansion vessel, and Expansion vessel is not included in this value.
*2 When powered from independent source.
*3 Allowable flow rate range differs depending on connected outdoor unit. Please refer to section 4.6.4.
*4 If the water flow rate range exceeds maximum, the flow speed will be greater than 2.0 m/s, which could corrode the pipes.
*5 If the water flow is less than the minimum, the flow error will be activated.
*6 Hot water performance differs depending on connected outdoor unit.
*7 24h temperature decay at top of the tank from 65degC at ambient temperature 20degC (BS EN 12897)
*8 Refrigerant of outdoor unit connected to cylinder unit.
*9 The enviroment must be frost-free.
*10 For the model without both booster heater and immersion heater, the max. hot water temperature is [Max. outlet water of outdoor unit -3°C]. For the max. outlet of outdoor unit spec table.

# 2 Specifications

| Model name | | | | | ERPT20X-VM6D | EHPT30X-MED | EHPT30X-YM9ED | ERPT30X-VM2ED | ERPT30X-VM6ED |
|---|---|---|---|---|---|---|---|---|---|
| Dimensions | Without package | Height | mm | | 1600 | 2050 | 2050 | 2050 | 2050 |
| | | Width | mm | | 595 | 595 | 595 | 595 | 595 |
| | | Depth | mm | | 680 | 680 | 680 | 680 | 680 |
| | With package | Height | mm | | 1850 | 2320 | 2320 | 2320 | 2320 |
| | | Width | mm | | 660 | 660 | 660 | 660 | 660 |
| | | Depth | mm | | 800 | 800 | 800 | 800 | 800 |
| Casing | Munsell | | - | | 6.2PB 9/0.9 | 6.2PB 9/0.9 | 6.2PB 9/0.9 | 6.2PB 9/0.9 | 6.2PB 9/0.9 |
| | RAL code | | - | | 260 90 05 | 260 90 05 | 260 90 05 | 260 90 05 | 260 90 05 |
| | Material | | - | | Pre-coated metal | Pre-coated metal | Pre-coated metal | Pre-coated metal | Pre-coated metal |
| Product weight (empty) | | | kg | | 95 | 106 | 110 | 107 | 108 |
| Product weight (full) | | | kg | | 301 | 413 | 419 | 414 | 415 |
| Gross weight | | | kg | | 112 | 125 | 129 | 126 | 127 |
| Water volume of heating circuit in the unit *1 | | | L | | 3.7 | 4.4 | 6.7 | 4.4 | 4.4 |
| Type of Installation | | | - | | Floor standing | Floor standing | Floor standing | Floor standing | Floor standing |
| Electrical data | Control board *2 (Including 4 pumps) | Power supply | Ph | | ~/N | ~/N | ~/N | ~/N | ~/N |
| | | | V | | 230 | 230 | 230 | 230 | 230 |
| | | | Hz | | 50 | 50 | 50 | 50 | 50 |
| | | Input | kW | | 0.30 | 0.30 | 0.30 | 0.30 | 0.30 |
| | | Current | A | | 1.95 | 1.95 | 1.95 | 1.95 | 1.95 |
| | | Breaker | A | | 10 | 10 | 10 | 10 | 10 |
| | Booster heater | Power supply | Ph | | ~/N | - | 3~ | ~/N | ~/N |
| | | | V | | 230 | - | 400 | 230 | 230 |
| | | | Hz | | 50 | - | 50 | 50 | 50 |
| | | Capacity | kW | | 2+4 | - | 3+6 | 2 | 2+4 |
| | | Heater step | - | | 3 | - | 3 | 1 | 3 |
| | | Current | A | | 26 | - | 13 | 9 | 26 |
| | | Breaker | A | | 32 | - | 16 | 16 | 32 |
| | Immersion heater | Power supply | Ph | | - | - | - | - | - |
| | | | V | | - | - | - | - | - |
| | | | Hz | | - | - | - | - | - |
| | | Capacity | kW | | - | - | - | - | - |
| | | Current | A | | - | - | - | - | - |
| | | Breaker | A | | - | - | - | - | - |
| Water circulation pump (Primary circuit) | Type | | - | | DC motor | DC motor | DC motor | DC motor | DC motor |
| | Input (10/20/max L/min)*3 | Speed 1 | W | | 10/13/15 | 10/13/15 | 10/13/15 | 10/13/15 | 10/13/15 |
| | | Speed 2 | W | | 16/21/27 | 16/21/27 | 16/21/27 | 16/21/27 | 16/21/27 |
| | | Speed 3 | W | | 24/32/42 | 24/32/42 | 24/32/42 | 24/32/42 | 24/32/42 |
| | | Speed 4 | W | | 34/46/58 | 34/46/58 | 34/46/58 | 34/46/58 | 34/46/58 |
| | | Speed 5 | W | | 47/58/60 | 47/58/60 | 47/58/60 | 47/58/60 | 47/58/60 |
| Performance curve: please refer to section 4.6.4 | Current (10/20/max L/min)*3 | Speed 1 | A | | 0.2/0.2/0.3 | 0.2/0.2/0.3 | 0.2/0.2/0.3 | 0.2/0.2/0.3 | 0.2/0.2/0.3 |
| | | Speed 2 | A | | 0.2/0.3/0.4 | 0.3/0.4/0.5 | 0.3/0.4/0.5 | 0.3/0.4/0.5 | 0.3/0.4/0.5 |
| | | Speed 3 | A | | 0.3/0.4/0.5 | 0.4/0.5/0.7 | 0.4/0.5/0.7 | 0.4/0.5/0.7 | 0.4/0.5/0.7 |
| | | Speed 4 | A | | 0.4/0.5/0.6 | 0.6/0.8/1.0 | 0.6/0.8/1.0 | 0.6/0.8/1.0 | 0.6/0.8/1.0 |
| | | Speed 5 | A | | 0.5/0.6/0.6 | 0.9/1.1/1.4 | 0.9/1.1/1.4 | 0.9/1.1/1.4 | 0.9/1.1/1.4 |
| Water circulation pump (DHW circuit) | Input | Speed Ⅰ | W | | 58 | 58 | 58 | 58 | 58 |
| | | Speed Ⅱ (Default setting) | W | | 72 | 72 | 72 | 72 | 72 |
| | | Speed Ⅲ | W | | 83 | 83 | 83 | 83 | 83 |
| | Current | Speed Ⅰ | A | | 0.27 | 0.27 | 0.27 | 0.27 | 0.27 |
| | | Speed Ⅱ (Default setting) | A | | 0.33 | 0.33 | 0.33 | 0.33 | 0.33 |
| | | Speed Ⅲ | A | | 0.36 | 0.36 | 0.36 | 0.36 | 0.36 |
| | Flow rate | Speed Ⅰ | L/min | | 14.5 | 14.5 | 14.5 | 14.5 | 14.5 |
| | | Speed Ⅱ (Default setting) | L/min | | 21.0 | 21.0 | 21.0 | 21.0 | 21.0 |
| | | Speed Ⅲ | L/min | | 25.2 | 25.2 | 25.2 | 25.2 | 25.2 |
| Flow rate | Primary circuit | Max.*4 | L/min | | 36.9 | 36.9 | 36.9 | 36.9 | 36.9 |
| | | Min.*5 | L/min | | 5.0 | 5.0 | 5.0 | 5.0 | 5.0 |
| Heat exchanger | Refrigerant - Primary circuit water | | - | | - | - | - | - | - |
| | Primary circuit water - Domestic hot water | | - | | CBH18-24H | CBH18-24H | CBH18-24H | CBH18-24H | CBH18-24H |
| Domestic hot water tank | Volume | | L | | 200 | 300 | 300 | 300 | 300 |
| | Material | | - | | Duplex 2304 stainless steel (EN10088) | Duplex 2304 stainless steel (EN10088) | Duplex 2304 stainless steel (EN10088) | Duplex 2304 stainless steel (EN10088) | Duplex 2304 stainless steel (EN10088) |
| | Declared load profile | | - | | L | XL | XL | XL | XL |
| | Average climate | $\eta_{wh}$ (water heating efficiency) *6 | - | | 135 to 148 | 120 | 120 | 120 | 120 |
| | | $P_{es}$ (standby power input) *6 | kW | | 0.035 to 0.037 | 0.040 to 0.042 | 0.040 to 0.042 | 0.040 to 0.042 | 0.040 to 0.042 |
| | | Water heater energy efficiency class | - | | A+ | A | A | A | A |
| | | Heat loss *7 | kWh/24hr | | 1.89 | 2.27 | 2.27 | 2.27 | 2.27 |
| Expansion vessel (Primary circuit) | Volume | | L | | 12 | - | - | - | - |
| | Charge pressure | | MPa | | 0.1 | - | - | - | - |
| Safety device | Primary circuit | Control thermistor | °C | | 1 to 80 | 1 to 80 | 1 to 80 | 1 to 80 | 1~80 |
| | | Pressure relief valve | MPa | | 0.3 | 0.3 | 0.3 | 0.3 | 0.3 |
| | | Flow sensor (Min. flow) | L/min | | 5.0 | 5.0 | 5.0 | 5.0 | 5.0 |
| | | BH manual reset thermostat | °C | | 90 | - | 90 | 90 | 90 |
| | | BH thermal Cut Off | °C | | 121 | - | 121 | 121 | 121 |
| | DHW tank | Control thermistor | °C | | 75 | 75 | 75 | 75 | 75 |
| | | IH manual reset thermostat | °C | | - | - | - | - | - |
| | | Temperature & pressure relief valve | °C | | - | - | - | - | - |
| | | | MPa | | 1.0 | 1.0 | 1.0 | 1.0 | 1.0 |
| Connections | Water | Primary circuit | mm | | φ28 | φ28 | φ28 | φ28 | φ28 |
| | | DHW circuit | mm | | φ22 | φ22 | φ22 | φ22 | φ22 |
| | Refrigerant | Gas | mm | | - | - | - | - | - |
| | | Liquid | mm | | - | - | - | - | - |
| Refrigerant *8 | | | - | | R32 | R32 | R32 | R32 | Water |
| Guaranteed operating range *9 | Ambient | | °C | | 0 to 35 | 0 to 35 | 0 to 35 | 0 to 35 | 0~35 |
| | | | %RH | | ≦80 | ≦80 | ≦80 | ≦80 | ≦80 |
| | Outdoor temperature | Heating | °C | | See outdoor unit spec table | | | | |
| | | Cooling | °C | | 10 to 46 | - | - | 10 to 46 | 10 to 46 |
| Operating range | Heating | Room temperature | °C | | 10 to 30 | 10 to 30 | 10 to 30 | 10 to 30 | 10~30 |
| | | Flow temperature | °C | | 20 to 60 | 20 to 60 | 20 to 60 | 20 to 60 | 20~60 |
| | Cooling | Room temperature | °C | | - | - | - | - | - |
| | | Flow temperature | °C | | 5 to 25 | - | - | 5 to 25 | 5~25 |
| | DHW *10 | | °C | | 40 to 60 | 40 to 60 | 40 to 60 | 40 to 60 | 40~60 |
| | Legionella prevention *10 | | °C | | 60 to 70 | 60 to 70 | 60 to 70 | 60 to 70 | 60~70 |
| Sound power level (PWL) | | | dB(A) | | 40 | 40 | 40 | 40 | 40 |

*1 Volume of sanitary water circuit, primary DHW circuit (from 3-way valve to confluent point with Heating circuit), piping to Expansion vessel, and Expansion vessel is not included in this value.
*2 When powered from independent source.
*3 Allowable flow rate range differs depending on connected outdoor unit. Please refer to section 4.6.4.
*4 If the water flow rate range exceeds maximum, the flow speed will be greater than 2.0 m/s, which could corrode the pipes.
*5 If the water flow is less than the minimum, the flow error will be activated.
*6 Hot water performance differs depending on connected outdoor unit.
*7 24h temperature decay at top of the tank from 65degC at ambient temperature 20degC (BS EN 12897)
*8 Refrigerant of outdoor unit connected to cylinder unit.
*9 The enviroment must be frost-free.
*10 For the model without both booster heater and immersion heater, the max. hot water temperature is [Max. outlet water of outdoor unit -3°C]. For the max. outlet of outdoor unit spec table.

# 2 Specifications

| Model name | | | | ERST17D-VM2BD | ERST17D-VM6BD | ERST17D-YM9BD |
|---|---|---|---|---|---|---|
| Dimensions | Without package | Height | mm | 1750 | 1750 | 1750 |
| | | Width | mm | 595 | 595 | 595 |
| | | Depth | mm | 680 | 680 | 680 |
| | With package | Height | mm | 2020 | 2020 | 2020 |
| | | Width | mm | 660 | 660 | 660 |
| | | Depth | mm | 800 | 800 | 800 |
| Casing | Munsell | | - | 6.2PB 9/0.9 | 6.2PB 9/0.9 | 6.2PB 9/0.9 |
| | RAL code | | - | 260 90 05 | 260 90 05 | 260 90 05 |
| | Material | | - | Pre-coated metal | Pre-coated metal | Pre-coated metal |
| Product weight (empty) | | | kg | 116 | 116 | 118 |
| Product weight (full) | | | kg | 293 | 293 | 297 |
| Gross weight | | | kg | 134 | 135 | 136 |
| Water volume of heating circuit in the unit *1 | | | L | 4.3 | 4.3 | 6.2 |
| Type of Installation | | | - | Floor standing | Floor standing | Floor standing |
| Electrical data | Control board *2 (Including 4 pumps) | Power supply | Ph | ~/N | ~/N | ~/N |
| | | | V | 230 | 230 | 230 |
| | | | Hz | 50 | 50 | 50 |
| | | Input | kW | 0.30 | 0.30 | 0.30 |
| | | Current | A | 1.95 | 1.95 | 1.95 |
| | | Breaker | A | 10 | 10 | 10 |
| | Booster heater | Power supply | Ph | ~/N | ~/N | 3~ |
| | | | V | 230 | 230 | 400 |
| | | | Hz | 50 | 50 | 50 |
| | | Capacity | kW | 2 | 2+4 | 3+6 |
| | | Heater step | - | 1 | 3 | 3 |
| | | Current | A | 9 | 26 | 13 |
| | | Breaker | A | 16 | 32 | 16 |
| | Immersion heater | Power supply | Ph | - | - | - |
| | | | V | - | - | - |
| | | | Hz | - | - | - |
| | | Capacity | kW | - | - | - |
| | | Current | A | - | - | - |
| | | Breaker | A | - | - | - |
| Water circulation pump (Primary circuit) | Type | | - | DC motor | DC motor | DC motor |
| | Input (10/20/max L/min)*3 | Speed 1 | W | 10/13/14 | 10/13/14 | 10/13/14 |
| | | Speed 2 | W | 16/21/24 | 16/21/24 | 16/21/24 |
| | | Speed 3 | W | 24/32/36 | 24/32/36 | 24/32/36 |
| | | Speed 4 | W | 34/46/54 | 34/46/54 | 34/46/54 |
| | | Speed 5 | W | 47/58/60 | 47/58/60 | 47/58/60 |
| Performance curve: please refer to section 4.6.4 | Current (10/20/max L/min)*3 | Speed 1 | A | 0.2/0.2/0.3 | 0.2/0.2/0.3 | 0.2/0.2/0.3 |
| | | Speed 2 | A | 0.2/0.3/0.4 | 0.2/0.3/0.4 | 0.2/0.3/0.4 |
| | | Speed 3 | A | 0.3/0.4/0.5 | 0.3/0.4/0.5 | 0.3/0.4/0.5 |
| | | Speed 4 | A | 0.4/0.5/0.6 | 0.4/0.5/0.6 | 0.4/0.5/0.6 |
| | | Speed 5 | A | 0.5/0.6/0.6 | 0.5/0.6/0.6 | 0.5/0.6/0.6 |
| Water circulation pump (DHW circuit) | Input | Speed Ⅰ | W | 55 | 55 | 55 |
| | | Speed Ⅱ (Default setting) | W | 69 | 69 | 69 |
| | | Speed Ⅲ | W | 80 | 80 | 80 |
| | Current | Speed Ⅰ | A | 0.25 | 0.25 | 0.25 |
| | | Speed Ⅱ (Default setting) | A | 0.31 | 0.31 | 0.31 |
| | | Speed Ⅲ | A | 0.34 | 0.34 | 0.34 |
| | Flow rate | Speed Ⅰ | L/min | 13.5 | 13.5 | 13.5 |
| | | Speed Ⅱ (Default setting) | L/min | 19.0 | 19.0 | 19.0 |
| | | Speed Ⅲ | L/min | 22.9 | 22.9 | 22.9 |
| Water circulation pump (Zone1/ Zone2 circuit) | Input (0/10/20L/min) | Speed CC1 (Min) | W | 14/22/25 | 14/22/25 | 14/22/25 |
| | | Speed CC4 (Max) | W | 28/43/52 | 28/43/52 | 28/43/52 |
| | Current (Max) | Speed CC4 (Max) | A | 0.52 | 0.52 | 0.52 |
| Flow rate | Primary circuit | Max.*4 | L/min | 25.8 | 25.8 | 25.8 |
| | | Min.*5 | L/min | 5.0 | 5.0 | 5.0 |
| Heat exchanger | Refrigerant - Primary circuit water | | - | MWA1-44-DM | MWA1-44-DM | MWA1-44-DM |
| | Primary circuit water - Domestic hot water | | - | CBH18-18H | CBH18-18H | CBH18-18H |
| Domestic hot water tank | Volume | | L | 170 | 170 | 170 |
| | Material | | - | Duplex 2304 stainless steel (EN10088) | | |
| | Declared load profile | | - | L | L | L |
| | Average climate | $\eta_{wh}$ (water heating efficiency) *6 | - | 135 to 148 | 135 to 148 | 135 to 148 |
| | | $P_{es}$ (standby power input) *6 | kW | 0.026 to 0.039 | 0.026 to 0.039 | 0.026 to 0.039 |
| | | Water heater energy efficiency class | - | A+ | A+ | A+ |
| | | Heat loss *7 | kWh/24hr | 1.65 | 1.65 | 1.65 |
| Expansion vessel (Primary circuit) | Volume | | L | 12 | 12 | 12 |
| | Charge pressure | | MPa | 0.1 | 0.1 | 0.1 |
| Safety device | Primary circuit | Control thermistor | °C | 1~80 | 1~80 | 1~80 |
| | | Pressure relief valve | MPa | 0.3 | 0.3 | 0.3 |
| | | Flow sensor (Min. flow) | L/min | 5.0 | 5.0 | 5.0 |
| | | BH manual reset thermostat | °C | 90 | 90 | 90 |
| | | BH thermal Cut Off | °C | 121 | 121 | 121 |
| | DHW tank | Control thermistor | °C | 75 | 75 | 75 |
| | | IH manual reset thermostat | °C | - | - | - |
| | | Temperature & pressure relief valve | °C | - | - | - |
| | | | MPa | 1.0 | 1.0 | 1.0 |
| Connections | Water | Primary circuit | mm | G1 female | G1 female | G1 female |
| | | DHW circuit | mm | G3/4 female | G3/4 female | G3/4 female |
| | Refrigerant | Gas | mm | φ12.7 | φ12.7 | φ12.7 |
| | | Liquid | mm | φ6.35 | φ6.35 | φ6.35 |
| Refrigerant *8 | | | - | R32/R410A | R32/R410A | R32/R410A |
| Guaranteed operating range *9 | Ambient | | °C | 0 to 35 | 0 to 35 | 0 to 35 |
| | | | %RH | ≦80 | ≦80 | ≦80 |
| | Outdoor temperature | Heating | °C | See outdoor unit spec table | | |
| | | Cooling | °C | See outdoor unit spec table | | |
| Operating range | Heating | Room temperature | °C | 10 to 30 | 10 to 30 | 10 to 30 |
| | | Flow temperature | °C | 20 to 60 | 20 to 60 | 20 to 60 |
| | Cooling | Room temperature | °C | - | - | - |
| | | Flow temperature | °C | 5 to 25 | 5 to 25 | 5 to 25 |
| | DHW *10 | | °C | 40 to 60 | 40 to 60 | 40 to 60 |
| | Legionella prevention *10 | | °C | 60 to 70 | 60 to 70 | 60 to 70 |
| Sound power level (PWL) | | | dB(A) | 41 | 41 | 41 |

*1 Volume of sanitary water circuit, primary DHW circuit (from 3-way valve to confluent point with Heating circuit), piping to Expansion vessel, and Expansion vessel is not included in this value.
*2 When powered from independent source.
*3 Allowable flow rate range differs depending on connected outdoor unit. Please refer to section 4.6.4.
*4 If the water flow rate range exceeds maximum, the flow speed will be greater than 2.0 m/s, which could corrode the pipes.
*5 If the water flow is less than the minimum, the flow error will be activated.
*6 Hot water performance differs depending on connected outdoor unit.
*7 24h temperature decay at top of the tank from 65degC at ambient temperature 20degC (BS EN 12897)
*8 Refrigerant of outdoor unit connected to cylinder unit.
*9 The enviroment must be frost-free.
*10 For the model without both booster heater and immersion heater, the max. hot water temperature is [Max. outlet water of outdoor unit -3°C]. For the max. outlet of outdoor unit spec table.

## 2.2. Hydrobox

| Model name | | | | EHSD-MED | EHSD-VM2D | EHSD-VM6D | EHSD-YM9D | EHSD-YM9ED | EHSD-TM9D |
|---|---|---|---|---|---|---|---|---|---|
| Dimensions | Without package | Height | mm | 800 | 800 | 800 | 800 | 800 | 800 |
| | | Width | mm | 530 | 530 | 530 | 530 | 530 | 530 |
| | | Depth | mm | 360 | 360 | 360 | 360 | 360 | 360 |
| | With package | Height | mm | 560 | 560 | 560 | 560 | 560 | 560 |
| | | Width | mm | 600 | 600 | 600 | 600 | 600 | 600 |
| | | Depth | mm | 990 | 990 | 990 | 990 | 990 | 990 |
| Casing | Munsell | | - | 6.2PB 9/0.9 | 6.2PB 9/0.9 | 6.2PB 9/0.9 | 6.2PB 9/0.9 | 6.2PB 9/0.9 | 6.2PB 9/0.9 |
| | RAL code | | - | 260 90 05 | 260 90 05 | 260 90 05 | 260 90 05 | 260 90 05 | 260 90 05 |
| | Material | | - | Pre-coated metal | Pre-coated metal | Pre-coated metal | Pre-coated metal | Pre-coated metal | Pre-coated metal |
| Product weight (empty) | | | kg | 36 | 43 | 44 | 44 | 40 | 44 |
| Product weight (full) | | | kg | 38 | 48 | 49 | 49 | 45 | 49 |
| Gross weight | | | kg | 49 | 55 | 57 | 57 | 53 | 57 |
| Water volume of heating circuit in the unit *1 | | | L | 1.7 | 5.2 | 5.2 | 5.2 | 5.2 | 5.2 |
| Type of Installation | | | - | Wall mounted | Wall mounted | Wall mounted | Wall mounted | Wall mounted | Wall mounted |
| Electrical data | Control board *2 (Including 3 pumps) | Power supply | Ph | ~/N | ~/N | ~/N | ~/N | ~/N | ~/N |
| | | | V | 230 | 230 | 230 | 230 | 230 | 230 |
| | | | Hz | 50 | 50 | 50 | 50 | 50 | 50 |
| | | Input | kW | 0.30 | 0.30 | 0.30 | 0.30 | 0.30 | 0.30 |
| | | Current | A | 1.95 | 1.95 | 1.95 | 1.95 | 1.95 | 1.95 |
| | | Breaker | A | 10 | 10 | 10 | 10 | 10 | 10 |
| | Booster heater | Power supply | Ph | - | ~/N | ~/N | 3~ | 3~ | 3~ |
| | | | V | - | 230 | 230 | 400 | 400 | 230 |
| | | | Hz | - | 50 | 50 | 50 | 50 | 50 |
| | | Capacity | kW | - | 2 | 2+4 | 3+6 | 3+6 | 3+6 |
| | | Heater step | - | - | 1 | 3 | 3 | 3 | 3 |
| | | Current | A | - | 9 | 26 | 13 | 13 | 23 |
| | | Breaker | A | - | 16 | 32 | 16 | 16 | 32 |
| | Immersion heater | Power supply | Ph | - | - | - | - | - | - |
| | | | V | - | - | - | - | - | - |
| | | | Hz | - | - | - | - | - | - |
| | | Capacity | kW | - | - | - | - | - | - |
| | | Current | A | - | - | - | - | - | - |
| | | Breaker | A | - | - | - | - | - | - |
| Water circulation pump (Primary circuit) | Type | | - | DC motor | DC motor | DC motor | DC motor | DC motor | DC motor |
| | Input (10/20/max L/min)*3 | Speed 1 | W | 10/13/15 | 10/13/15 | 10/13/15 | 10/13/15 | 10/13/15 | 10/13/15 |
| | | Speed 2 | W | 16/21/27 | 16/21/27 | 16/21/27 | 16/21/27 | 16/21/27 | 16/21/27 |
| | | Speed 3 | W | 24/32/42 | 24/32/42 | 24/32/42 | 24/32/42 | 24/32/42 | 24/32/42 |
| | | Speed 4 | W | 34/46/58 | 34/46/58 | 34/46/58 | 34/46/58 | 34/46/58 | 34/46/58 |
| | | Speed 5 | W | 47/58/60 | 47/58/60 | 47/58/60 | 47/58/60 | 47/58/60 | 47/58/60 |
| Performance curve: please refer to section 5.6.4 | Current (10/20/max L/min)*3 | Speed 1 | A | 0.2/0.2/0.3 | 0.2/0.2/0.3 | 0.2/0.2/0.3 | 0.2/0.2/0.3 | 0.2/0.2/0.3 | 0.2/0.2/0.3 |
| | | Speed 2 | A | 0.2/0.3/0.4 | 0.2/0.3/0.4 | 0.2/0.3/0.4 | 0.2/0.3/0.4 | 0.2/0.3/0.4 | 0.2/0.3/0.4 |
| | | Speed 3 | A | 0.3/0.4/0.5 | 0.3/0.4/0.5 | 0.3/0.4/0.5 | 0.3/0.4/0.5 | 0.3/0.4/0.5 | 0.3/0.4/0.5 |
| | | Speed 4 | A | 0.4/0.5/0.6 | 0.4/0.5/0.6 | 0.4/0.5/0.6 | 0.4/0.5/0.6 | 0.4/0.5/0.6 | 0.4/0.5/0.6 |
| | | Speed 5 | A | 0.5/0.6/0.6 | 0.5/0.6/0.6 | 0.5/0.6/0.6 | 0.5/0.6/0.6 | 0.5/0.6/0.6 | 0.5/0.6/0.6 |
| Water circulation pump (DHW circuit) | Input | Speed Ⅰ | W | - | - | - | - | - | - |
| | | Speed Ⅱ (Default setting) | W | - | - | - | - | - | - |
| | | Speed Ⅲ | W | - | - | - | - | - | - |
| | Current | Speed Ⅰ | A | - | - | - | - | - | - |
| | | Speed Ⅱ (Default setting) | A | - | - | - | - | - | - |
| | | Speed Ⅲ | A | - | - | - | - | - | - |
| | Flow rate | Speed Ⅰ | L/min | - | - | - | - | - | - |
| | | Speed Ⅱ (Default setting) | L/min | - | - | - | - | - | - |
| | | Speed Ⅲ | L/min | - | - | - | - | - | - |
| Flow rate | Primary circuit | Max.*4 | L/min | 36.9 | 36.9 | 36.9 | 36.9 | 36.9 | 36.9 |
| | | Min.*5 | L/min | 5.0 | 5.0 | 5.0 | 5.0 | 5.0 | 5.0 |
| Heat exchanger | Refrigerant - Primary circuit water | | - | MWA1-44DM | MWA1-44DM | MWA1-44DM | MWA1-44DM | MWA1-44DM | MWA1-44DM |
| | Primary circuit water - Domestic hot water | | - | - | - | - | - | - | - |
| Domestic hot water tank | Volume | | L | - | - | - | - | - | - |
| | Material | | - | - | - | - | - | - | - |
| | Declared load profile | | - | - | - | - | - | - | - |
| | Average climate | $\eta_{wh}$ (water heating efficiency)*6 | - | - | - | - | - | - | - |
| | | $P_{es}$ (standby power input)*6 | kW | - | - | - | - | - | - |
| | | Water heater energy efficiency class | - | - | - | - | - | - | - |
| | | Heat loss *7 | kWh/24hr | - | - | - | - | - | - |
| Expansion vessel (Primary circuit) | Volume | | L | - | 10 | 10 | 10 | - | 10 |
| | Charge pressure | | MPa | - | 0.1 | 0.1 | 0.1 | - | 0.1 |
| Safety device | Primary circuit | Control thermistor | °C | 1 to 80 | 1 to 80 | 1 to 80 | 1 to 80 | 1 to 80 | 1 to 80 |
| | | Pressure relief valve | MPa | 0.3 | 0.3 | 0.3 | 0.3 | 0.3 | 0.3 |
| | | Flow sensor (Min. flow) | L/min | 5.0 | 5.0 | 5.0 | 5.0 | 5.0 | 5.0 |
| | | BH manual reset thermostat | °C | - | 90 | 90 | 90 | 90 | 90 |
| | | BH thermal Cut Off | °C | - | 121 | 121 | 121 | 121 | 121 |
| | DHW tank | Control thermistor | °C | - | - | - | - | - | - |
| | | IH manual reset thermostat | °C | - | - | - | - | - | - |
| | | Temperature & pressure relief valve | °C | - | - | - | - | - | - |
| | | | MPa | - | - | - | - | - | - |
| Connections | Water | Primary circuit | mm | φ28 | φ28 | φ28 | φ28 | φ28 | φ28 |
| | | DHW circuit | mm | - | - | - | - | - | - |
| | Refrigerant | Gas | mm | φ12.7 | φ12.7 | φ12.7 | φ12.7 | φ12.7 | φ12.7 |
| | | Liquid | mm | φ6.35 | φ6.35 | φ6.35 | φ6.35 | φ6.35 | φ6.35 |
| Refrigerant *8 | | | - | R32/R410A | R32/R410A | R32/R410A | R32/R410A | R32/R410A | R32/R410A |
| Guaranteed operating range *9 | Ambient | | °C | 0 to 35 | 0 to 35 | 0 to 35 | 0 to 35 | 0 to 35 | 0 to 35 |
| | | | %RH | ≦80 | ≦80 | ≦80 | ≦80 | ≦80 | ≦80 |
| | Outdoor temperature | Heating | °C | See outdoor unit spec table | | | | | |
| | | Cooling | °C | - | - | - | - | - | - |
| Operating range | Heating | Room temperature | °C | 10 to 30 | 10 to 30 | 10 to 30 | 10 to 30 | 10 to 30 | 10 to 30 |
| | | Flow temperature | °C | 20 to 60 | 20 to 60 | 20 to 60 | 20 to 60 | 20 to 60 | 20 to 60 |
| | Cooling | Room temperature | °C | - | - | - | - | - | - |
| | | Flow temperature | °C | - | - | - | - | - | - |
| | DHW *10 | | °C | - | - | - | - | - | - |
| | Legionella prevention *10 | | °C | - | - | - | - | - | - |
| Sound power level (PWL) | | | dB(A) | 41 | 41 | 41 | 41 | 41 | 41 |

*1 Volume of sanitary water circuit, primary DHW circuit (from 3-way valve to confluent point with Heating circuit), piping to Expansion vessel, and Expansion vessel is not included in this value.
*2 When powered from independent source.
*3 Allowable flow rate range differs depending on connected outdoor unit. Please refer to section 5.6.4.
*4 If the water flow rate range exceeds maximum, the flow speed will be greater than 2.0 m/s, which could corrode the pipes.
*5 If the water flow is less than the minimum, the flow error will be activated.
*6 Hot water performance differs depending on connected outdoor unit.
*7 24h temperature decay at top of the tank from 65degC at ambient temperature 20degC (BS EN 12897)
*8 Refrigerant of outdoor unit connected to cylinder unit.
*9 The enviroment must be frost-free.
*10 For the model without both booster heater and immersion heater, the max. hot water temperature is [Max. outlet water of outdoor unit -3°C]. For the max. outlet of outdoor unit spec table.

# 2 Specifications

| Model name | | | | | EHSC-MED | EHSC-VM2D | EHSC-VM6D | EHSC-YM9D | EHSC-YM9ED | EHSC-TM9D |
|---|---|---|---|---|---|---|---|---|---|---|
| Dimensions | Without package | Height | mm | | 800 | 800 | 800 | 800 | 800 | 800 |
| | | Width | mm | | 530 | 530 | 530 | 530 | 530 | 530 |
| | | Depth | mm | | 360 | 360 | 360 | 360 | 360 | 360 |
| | With package | Height | mm | | 560 | 560 | 560 | 560 | 560 | 560 |
| | | Width | mm | | 600 | 600 | 600 | 600 | 600 | 600 |
| | | Depth | mm | | 990 | 990 | 990 | 990 | 990 | 990 |
| Casing | Munsell | | - | | 6.2PB 9/0.9 | 6.2PB 9/0.9 | 6.2PB 9/0.9 | 6.2PB 9/0.9 | 6.2PB 9/0.9 | 6.2PB 9/0.9 |
| | RAL code | | - | | 260 90 05 | 260 90 05 | 260 90 05 | 260 90 05 | 260 90 05 | 260 90 05 |
| | Material | | - | | Pre-coated metal | Pre-coated metal | Pre-coated metal | Pre-coated metal | Pre-coated metal | Pre-coated metal |
| Product weight (empty) | | | kg | | 40 | 47 | 48 | 48 | 43 | 48 |
| Product weight (full) | | | kg | | 42 | 53 | 54 | 54 | 50 | 54 |
| Gross weight | | | kg | | 53 | 60 | 61 | 61 | 57 | 61 |
| Water volume of heating circuit in the unit *1 | | | L | | 2.6 | 6.1 | 6.1 | 6.1 | 6.1 | 6.1 |
| Type of Installation | | | - | | Wall mounted | Wall mounted | Wall mounted | Wall mounted | Wall mounted | Wall mounted |
| Electrical data | Control board *2 (Including 3 pumps) | Power supply | Ph | | ~/N | ~/N | ~/N | ~/N | ~/N | ~/N |
| | | | V | | 230 | 230 | 230 | 230 | 230 | 230 |
| | | | Hz | | 50 | 50 | 50 | 50 | 50 | 50 |
| | | Input | kW | | 0.30 | 0.30 | 0.30 | 0.30 | 0.30 | 0.30 |
| | | Current | A | | 1.95 | 1.95 | 1.95 | 1.95 | 1.95 | 1.95 |
| | | Breaker | A | | 10 | 10 | 10 | 10 | 10 | 10 |
| | Booster heater | Power supply | Ph | | - | ~/N | ~/N | 3~ | 3~ | 3~ |
| | | | V | | - | 230 | 230 | 400 | 400 | 230 |
| | | | Hz | | - | 50 | 50 | 50 | 50 | 50 |
| | | Capacity | kW | | - | 2 | 2+4 | 3+6 | 3+6 | 3+6 |
| | | Heater step | - | | - | 1 | 3 | 3 | 3 | 3 |
| | | Current | A | | - | 9 | 26 | 13 | 13 | 23 |
| | | Breaker | A | | - | 16 | 32 | 16 | 16 | 32 |
| | Immersion heater | Power supply | Ph | | - | - | - | - | - | - |
| | | | V | | - | - | - | - | - | - |
| | | | Hz | | - | - | - | - | - | - |
| | | Capacity | kW | | - | - | - | - | - | - |
| | | Current | A | | - | - | - | - | - | - |
| | | Breaker | A | | - | - | - | - | - | - |
| Water circulation pump (Primary circuit) | Type | | - | | DC motor | DC motor | DC motor | DC motor | DC motor | DC motor |
| | Input (10/20/max L/min)*3 | Speed 1 | W | | 10/13/15 | 10/13/15 | 10/13/15 | 10/13/15 | 10/13/15 | 10/13/15 |
| | | Speed 2 | W | | 16/21/27 | 16/21/27 | 16/21/27 | 16/21/27 | 16/21/27 | 16/21/27 |
| | | Speed 3 | W | | 24/32/42 | 24/32/42 | 24/32/42 | 24/32/42 | 24/32/42 | 24/32/42 |
| | | Speed 4 | W | | 34/46/58 | 34/46/58 | 34/46/58 | 34/46/58 | 34/46/58 | 34/46/58 |
| | | Speed 5 | W | | 47/58/60 | 47/58/60 | 47/58/60 | 47/58/60 | 47/58/60 | 47/58/60 |
| Performance curve: please refer to section 5.6.4 | Current (10/20/max L/min)*3 | Speed 1 | A | | 0.2/0.2/0.3 | 0.2/0.2/0.3 | 0.2/0.2/0.3 | 0.2/0.2/0.3 | 0.2/0.2/0.3 | 0.2/0.2/0.3 |
| | | Speed 2 | A | | 0.2/0.3/0.4 | 0.2/0.3/0.4 | 0.2/0.3/0.4 | 0.2/0.3/0.4 | 0.2/0.3/0.4 | 0.2/0.3/0.4 |
| | | Speed 3 | A | | 0.3/0.4/0.5 | 0.3/0.4/0.5 | 0.3/0.4/0.5 | 0.3/0.4/0.5 | 0.3/0.4/0.5 | 0.3/0.4/0.5 |
| | | Speed 4 | A | | 0.4/0.5/0.6 | 0.4/0.5/0.6 | 0.4/0.5/0.6 | 0.4/0.5/0.6 | 0.4/0.5/0.6 | 0.4/0.5/0.6 |
| | | Speed 5 | A | | 0.5/0.6/0.6 | 0.5/0.6/0.6 | 0.5/0.6/0.6 | 0.5/0.6/0.6 | 0.5/0.6/0.6 | 0.5/0.6/0.6 |
| Water circulation pump (DHW circuit) | Input | Speed Ⅰ | W | | - | - | - | - | - | - |
| | | Speed Ⅱ (Default setting) | W | | - | - | - | - | - | - |
| | | Speed Ⅲ | W | | - | - | - | - | - | - |
| | Current | Speed Ⅰ | A | | - | - | - | - | - | - |
| | | Speed Ⅱ (Default setting) | A | | - | - | - | - | - | - |
| | | Speed Ⅲ | A | | - | - | - | - | - | - |
| | Flow rate | Speed Ⅰ | L/min | | - | - | - | - | - | - |
| | | Speed Ⅱ (Default setting) | L/min | | - | - | - | - | - | - |
| | | Speed Ⅲ | L/min | | - | - | - | - | - | - |
| Flow rate | Primary circuit | Max.*4 | L/min | | 36.9 | 36.9 | 36.9 | 36.9 | 36.9 | 36.9 |
| | | Min.*5 | L/min | | 5.0 | 5.0 | 5.0 | 5.0 | 5.0 | 5.0 |
| Heat exchanger | Refrigerant - Primary circuit water | | - | | MWA2-38PA-4 | MWA2-38PA-4 | MWA2-38PA-4 | MWA2-38PA-4 | MWA2-38PA-4 | MWA2-38PA-4 |
| | Primary circuit water - Domestic hot water | | - | | - | - | - | - | - | - |
| Domestic hot water tank | Volume | | L | | - | - | - | - | - | - |
| | Material | | - | | - | - | - | - | - | - |
| | Declared load profile | | - | | - | - | - | - | - | - |
| | Average climate | $\eta_{wh}$ (water heating efficiency)*6 | - | | - | - | - | - | - | - |
| | | $P_{es}$ (standby power input)*6 | kW | | - | - | - | - | - | - |
| | | Water heater energy efficiency class | - | | - | - | - | - | - | - |
| | | Heat loss *7 | kWh/24hr | | - | - | - | - | - | - |
| Expansion vessel (Primary circuit) | Volume | | L | | - | 10 | 10 | 10 | - | 10 |
| | Charge pressure | | MPa | | - | 0.1 | 0.1 | 0.1 | - | 0.1 |
| Safety device | Primary circuit | Control thermistor | °C | | 1 to 80 | 1 to 80 | 1 to 80 | 1 to 80 | 1 to 80 | 1 to 80 |
| | | Pressure relief valve | MPa | | 0.3 | 0.3 | 0.3 | 0.3 | 0.3 | 0.3 |
| | | Flow sensor (Min. flow) | L/min | | 5.0 | 5.0 | 5.0 | 5.0 | 5.0 | 5.0 |
| | | BH manual reset thermostat | °C | | - | 90 | 90 | 90 | 90 | 90 |
| | | BH thermal Cut Off | °C | | - | 121 | 121 | 121 | 121 | 121 |
| | DHW tank | Control thermistor | °C | | - | - | - | - | - | - |
| | | IH manual reset thermostat | °C | | - | - | - | - | - | - |
| | | Temperature & pressure relief valve | °C | | - | - | - | - | - | - |
| | | | MPa | | - | - | - | - | - | - |
| Connections | Water | Primary circuit | mm | | φ28 | φ28 | φ28 | φ28 | φ28 | φ28 |
| | | DHW circuit | mm | | - | - | - | - | - | - |
| | Refrigerant | Gas | mm | | φ15.88 | φ15.88 | φ15.88 | φ15.88 | φ15.88 | φ15.88 |
| | | Liquid | mm | | φ9.52 | φ9.52 | φ9.52 | φ9.52 | φ9.52 | φ9.52 |
| Refrigerant *8 | | | - | | R410A | R410A | R410A | R410A | R410A | R410A |
| Guaranteed operating range *9 | Ambient | | °C | | 0 to 35 | 0 to 35 | 0 to 35 | 0 to 35 | 0 to 35 | 0 to 35 |
| | | | %RH | | ≦80 | ≦80 | ≦80 | ≦80 | ≦80 | ≦80 |
| | Outdoor temperature | Heating | °C | | See outdoor unit spec table | | | | | |
| | | Cooling | °C | | - | - | - | - | - | - |
| Operating range | Heating | Room temperature | °C | | 10 to 30 | 10 to 30 | 10 to 30 | 10 to 30 | 10 to 30 | 10 to 30 |
| | | Flow temperature | °C | | 20 to 60 | 20 to 60 | 20 to 60 | 20 to 60 | 20 to 60 | 20 to 60 |
| | Cooling | Room temperature | °C | | - | - | - | - | - | - |
| | | Flow temperature | °C | | - | - | - | - | - | - |
| | DHW *10 | | °C | | - | - | - | - | - | - |
| | Legionella prevention *10 | | °C | | - | - | - | - | - | - |
| Sound power level (PWL) | | | dB(A) | | 40 | 40 | 40 | 40 | 40 | 40 |

*1 Volume of sanitary water circuit, primary DHW circuit (from 3-way valve to confluent point with Heating circuit), piping to Expansion vessel, and Expansion vessel is not included in this value.
*2 When powered from independent source.
*3 Allowable flow rate range differs depending on connected outdoor unit. Please refer to section 5.6.4.
*4 If the water flow rate range exceeds maximum, the flow speed will be greater than 2.0 m/s, which could corrode the pipes.
*5 If the water flow is less than the minimum, the flow error will be activated.
*6 Hot water performance differs depending on connected outdoor unit.
*7 24h temperature decay at top of the tank from 65degC at ambient temperature 20degC (BS EN 12897)
*8 Refrigerant of outdoor unit connected to cylinder unit.
*9 The enviroment must be frost-free.
*10 For the model without both booster heater and immersion heater, the max. hot water temperature is [Max. outlet water of outdoor unit -3°C]. For the max. outllet of outdoor unit spec table.

# 2 Specifications

| Model name | | | | | EHSE-YM9ED | EHSE-MED | ERSD-MED | ERSD-VM2D | ERSC-MED | ERSC-VM2D |
|---|---|---|---|---|---|---|---|---|---|---|
| Dimensions | Without package | Height | mm | | 950 | 950 | 800 | 800 | 800 | 800 |
| | | Width | mm | | 600 | 600 | 530 | 530 | 530 | 530 |
| | | Depth | mm | | 360 | 360 | 360 | 360 | 360 | 360 |
| | With package | Height | mm | | 560 | 560 | 560 | 560 | 560 | 560 |
| | | Width | mm | | 690 | 690 | 600 | 600 | 600 | 600 |
| | | Depth | mm | | 1150 | 1150 | 990 | 990 | 990 | 990 |
| Casing | Munsell | | - | | 6.2PB 9/0.9 | 6.2PB 9/0.9 | 6.2PB 9/0.9 | 6.2PB 9/0.9 | 6.2PB 9/0.9 | 6.2PB 9/0.9 |
| | RAL code | | - | | 260 90 05 | 260 90 05 | 260 90 05 | 260 90 05 | 260 90 05 | 260 90 05 |
| | Material | | - | | Pre-coated metal | Pre-coated metal | Pre-coated metal | Pre-coated metal | Pre-coated metal | Pre-coated metal |
| Product weight (empty) | | | kg | | 63 | 61 | 38 | 44 | 41 | 48 |
| Product weight (full) | | | kg | | 73 | 71 | 39 | 50 | 44 | 54 |
| Gross weight | | | kg | | 78 | 76 | 51 | 58 | 54 | 61 |
| Water volume of heating circuit in the unit *1 | | | L | | 10.0 | 10.0 | 1.7 | 5.2 | 2.6 | 6.1 |
| Type of Installation | | | - | | Wall mounted | Wall mounted | Wall mounted | Wall mounted | Wall mounted | Wall mounted |
| Electrical data | Control board *2 (Including 3 pumps) | Power supply | Ph | | ~/N | ~/N | ~/N | ~/N | ~/N | ~/N |
| | | | V | | 230 | 230 | 230 | 230 | 230 | 230 |
| | | | Hz | | 50 | 50 | 50 | 50 | 50 | 50 |
| | | Input | kW | | 0.34 | 0.34 | 0.30 | 0.30 | 0.30 | 0.30 |
| | | Current | A | | 2.56 | 2.56 | 1.95 | 1.95 | 1.95 | 1.95 |
| | | Breaker | A | | 10 | 10 | 10 | 10 | 10 | 10 |
| | Booster heater | Power supply | Ph | | 3~ | - | - | ~/N | - | ~/N |
| | | | V | | 400 | - | - | 230 | - | 230 |
| | | | Hz | | 50 | - | - | 50 | - | 50 |
| | | Capacity | kW | | 3+6 | - | - | 2 | - | 2 |
| | | Heater step | - | | 3 | - | - | 1 | - | 1 |
| | | Current | A | | 13 | - | - | 9 | - | 9 |
| | | Breaker | A | | 16 | - | - | 16 | - | 16 |
| | Immersion heater | Power supply | Ph | | - | - | - | - | - | - |
| | | | V | | - | - | - | - | - | - |
| | | | Hz | | - | - | - | - | - | - |
| | | Capacity | kW | | - | - | - | - | - | - |
| | | Current | A | | - | - | - | - | - | - |
| | | Breaker | A | | - | - | - | - | - | - |
| Water circulation pump (Primary circuit) | Type | | - | | DC motor | DC motor | DC motor | DC motor | DC motor | DC motor |
| | Input (10/20/max L/min)*3 | Speed 1 | W | | 31/37/38 | 31/37/38 | 10/13/15 | 10/13/15 | 10/13/15 | 10/13/15 |
| | | Speed 2 | W | | 51/63/38 | 51/63/38 | 16/21/27 | 16/21/27 | 16/21/27 | 16/21/27 |
| | | Speed 3 | W | | 75/94/105 | 75/94/105 | 24/32/42 | 24/32/42 | 24/32/42 | 24/32/42 |
| | | Speed 4 | W | | 106/134/153 | 106/134/153 | 34/46/58 | 34/46/58 | 34/46/58 | 34/46/58 |
| | | Speed 5 | W | | 148/180/180 | 148/180/180 | 47/58/60 | 47/58/60 | 47/58/60 | 47/58/60 |
| Performance curve: please refer to section 5.6.4 | Current (10/20/max L/min)*3 | Speed 1 | A | | 0.3/0.3/0.3 | 0.3/0.3/0.3 | 0.2/0.2/0.3 | 0.2/0.2/0.3 | 0.2/0.2/0.3 | 0.2/0.2/0.3 |
| | | Speed 2 | A | | 0.4/0.5/0.5 | 0.4/0.5/0.5 | 0.2/0.3/0.4 | 0.2/0.3/0.4 | 0.2/0.3/0.4 | 0.2/0.3/0.4 |
| | | Speed 3 | A | | 0.6/0.7/0.8 | 0.6/0.7/0.8 | 0.3/0.4/0.5 | 0.3/0.4/0.5 | 0.3/0.4/0.5 | 0.3/0.4/0.5 |
| | | Speed 4 | A | | 0.9/1.1/1.2 | 0.9/1.1/1.2 | 0.4/0.5/0.6 | 0.4/0.5/0.6 | 0.4/0.5/0.6 | 0.4/0.5/0.6 |
| | | Speed 5 | A | | 1.2/1.4/1.4 | 1.2/1.4/1.4 | 0.5/0.6/0.6 | 0.5/0.6/0.6 | 0.5/0.6/0.6 | 0.5/0.6/0.6 |
| Water circulation pump (DHW circuit) | Input | Speed Ⅰ | W | | - | - | - | - | - | - |
| | | Speed Ⅱ (Default setting) | W | | - | - | - | - | - | - |
| | | Speed Ⅲ | W | | - | - | - | - | - | - |
| | Current | Speed Ⅰ | A | | - | - | - | - | - | - |
| | | Speed Ⅱ (Default setting) | A | | - | - | - | - | - | - |
| | | Speed Ⅲ | A | | - | - | - | - | - | - |
| | Flow rate | Speed Ⅰ | L/min | | - | - | - | - | - | - |
| | | Speed Ⅱ (Default setting) | L/min | | - | - | - | - | - | - |
| | | Speed Ⅲ | L/min | | - | - | - | - | - | - |
| Flow rate | Primary circuit | Max.*4 | L/min | | 61.5 | 61.5 | 36.9 | 36.9 | 36.9 | 36.9 |
| | | Min.*5 | L/min | | 5.0 | 5.0 | 5.0 | 5.0 | 5.0 | 5.0 |
| Heat exchanger | Refrigerant - Primary circuit water | | - | | MWA2-72PA | MWA2-72PA | MWA1-44DM | MWA1-44DM | MWA2-38PA-4 | MWA2-38PA-4 |
| | Primary circuit water - Domestic hot water | | - | | - | - | - | - | - | - |
| Domestic hot water tank | Volume | | L | | - | - | - | - | - | - |
| | Material | | - | | - | - | - | - | - | - |
| | Declared load profile | | - | | - | - | - | - | - | - |
| | Average climate | $\eta_{wh}$ (water heating efficiency)*6 | - | | - | - | - | - | - | - |
| | | $P_{es}$ (standby power input)*6 | kW | | - | - | - | - | - | - |
| | | Water heater energy efficiency class | - | | - | - | - | - | - | - |
| | | Heat loss *7 | kWh/24hr | | - | - | - | - | - | - |
| Expansion vessel (Primary circuit) | Volume | | L | | - | - | - | 10 | - | 10 |
| | Charge pressure | | MPa | | - | - | - | 0.1 | - | 0.1 |
| Safety device | Primary circuit | Control thermistor | °C | | 1 to 80 | 1 to 80 | 1 to 80 | 1 to 80 | 1 to 80 | 1 to 80 |
| | | Pressure relief valve | MPa | | 0.3 | 0.3 | 0.3 | 0.3 | 0.3 | 0.3 |
| | | Flow sensor (Min. flow) | L/min | | 5.0 | 5.0 | 5.0 | 5.0 | 5.0 | 5.0 |
| | | BH manual reset thermostat | °C | | 90 | - | - | 90 | - | 90 |
| | | BH thermal Cut Off | °C | | 121 | - | - | 121 | - | 121 |
| | DHW tank | Control thermistor | °C | | - | - | - | - | - | - |
| | | IH manual reset thermostat | °C | | - | - | - | - | - | - |
| | | Temperature & pressure relief valve | °C | | - | - | - | - | - | - |
| | | | MPa | | - | - | - | - | - | - |
| Connections | Water | Primary circuit | mm | | G1-1/2 -B | G1-1/2 -B | G1-B | G1-B | G1-B | G1-B |
| | | DHW circuit | mm | | - | - | - | - | - | - |
| | Refrigerant | Gas | mm | | φ25.4(Brazing) | φ25.4(Brazing) | φ12.7 | φ12.7 | φ15.88 | φ15.88 |
| | | Liquid | mm | | φ9.52 | φ9.52 | φ6.35 | φ6.35 | φ9.52 | φ9.52 |
| Refrigerant *8 | | | - | | R410A | R410A | R32/R410A | R32/R410A | R410A | R410A |
| Guaranteed operating range *9 | Ambient | | °C | | 0 to 35 | 0 to 35 | 0 to 35 | 0 to 35 | 0 to 35 | 0 to 35 |
| | | | %RH | | ≦80 | ≦80 | ≦80 | ≦80 | ≦80 | ≦80 |
| | Outdoor temperature | Heating | °C | | See outdoor unit spec table | | | | | |
| | | Cooling | °C | | - | - | 10 to 46 | 10 to 46 | 10 to 46 | 10 to 46 |
| Operating range | Heating | Room temperature | °C | | 10 to 30 | 10 to 30 | 10 to 30 | 10 to 30 | 10 to 30 | 10 to 30 |
| | | Flow temperature | °C | | 20 to 60 | 20 to 60 | 20 to 60 | 20 to 60 | 20 to 60 | 20 to 60 |
| | Cooling | Room temperature | °C | | - | - | - | - | - | - |
| | | Flow temperature | °C | | - | - | 5 to 25 | 5 to 25 | 5 to 25 | 5 to 25 |
| | DHW *10 | | °C | | - | - | - | - | - | - |
| | Legionella prevention *10 | | °C | | - | - | - | - | - | - |
| Sound power level (PWL) | | | dB(A) | | 45 | 45 | 41 | 41 | 40 | 40 |

*1 Volume of sanitary water circuit, primary DHW circuit (from 3-way valve to confluent point with Heating circuit), piping to Expansion vessel, and Expansion vessel is not included in this value.
*2 When powered from independent source.
*3 Allowable flow rate range differs depending on connected outdoor unit. Please refer to section 5.6.4.
*4 If the water flow rate range exceeds maximum, the flow speed will be greater than 2.0 m/s, which could corrode the pipes.
*5 If the water flow is less than the minimum, the flow error will be activated.
*6 Hot water performance differs depending on connected outdoor unit.
*7 24h temperature decay at top of the tank from 65degC at ambient temperature 20degC (BS EN 12897)
*8 Refrigerant of outdoor unit connected to cylinder unit.
*9 The enviroment must be frost-free.
*10 For the model without both booster heater and immersion heater, the max. hot water temperature is [Max. outlet water of outdoor unit -3°C]. For the max. outllet of outdoor unit spec table.

# 2 Specifications

| Model name | | | | ERSD-VM6D | ERSD-YM9D | ERSC-VM6D | ERSC-YM9D | ERSE-YM9ED | ERSE-MED |
|---|---|---|---|---|---|---|---|---|---|
| Dimensions | Without package | Height | mm | 800 | 800 | 800 | 800 | 950 | 950 |
| | | Width | mm | 530 | 530 | 530 | 530 | 600 | 600 |
| | | Depth | mm | 360 | 360 | 360 | 360 | 360 | 360 |
| | With package | Height | mm | 560 | 560 | 560 | 560 | 560 | 560 |
| | | Width | mm | 600 | 600 | 600 | 600 | 690 | 690 |
| | | Depth | mm | 990 | 990 | 990 | 990 | 1150 | 1150 |
| Casing | Munsell | | - | 6.2PB 9/0.9 | 6.2PB 9/0.9 | 6.2PB 9/0.9 | 6.2PB 9/0.9 | 6.2PB 9/0.9 | 6.2PB 9/0.9 |
| | RAL code | | - | 260 90 05 | 260 90 05 | 260 90 05 | 260 90 05 | 260 90 05 | 260 90 05 |
| | Material | | - | Pre-coated metal | Pre-coated metal | Pre-coated metal | Pre-coated metal | Pre-coated metal | Pre-coated metal |
| Product weight (empty) | | | kg | 43 | 44 | 48 | 48 | 64 | 62 |
| Product weight (full) | | | kg | 49 | 50 | 54 | 55 | 74 | 72 |
| Gross weight | | | kg | 57 | 58 | 61 | 62 | 79 | 77 |
| Water volume of heating circuit in the unit *1 | | | L | 5.2 | 5.2 | 6.1 | 6.1 | 10.0 | 10.0 |
| Type of Installation | | | - | Wall mounted | Wall mounted | Wall mounted | Wall mounted | Wall mounted | Wall mounted |
| Electrical data | Control board *2 (Including 3 pumps) | Power supply | Ph | ~/N | ~/N | ~/N | ~/N | ~/N | ~/N |
| | | | V | 230 | 230 | 230 | 230 | 230 | 230 |
| | | | Hz | 50 | 50 | 50 | 50 | 50 | 50 |
| | | Input | kW | 0.30 | 0.30 | 0.30 | 0.30 | 0.34 | 0.34 |
| | | Current | A | 1.95 | 1.95 | 1.95 | 1.95 | 2.56 | 2.56 |
| | | Breaker | A | 10 | 10 | 10 | 10 | 10 | 10 |
| | Booster heater | Power supply | Ph | ~/N | 3~ | ~/N | 3~ | 3~ | - |
| | | | V | 230 | 400 | 230 | 400 | 400 | - |
| | | | Hz | 50 | 50 | 50 | 50 | 50 | - |
| | | Capacity | kW | 2+4 | 3+6 | 2+4 | 3+6 | 3+6 | - |
| | | Heater step | - | - | 3 | - | 3 | 3 | - |
| | | Current | A | 26 | 13 | 26 | 13 | 13 | - |
| | | Breaker | A | 32 | 16 | 32 | 16 | 16 | - |
| | Immersion heater | Power supply | Ph | - | - | - | - | - | - |
| | | | V | - | - | - | - | - | - |
| | | | Hz | - | - | - | - | - | - |
| | | Capacity | kW | - | - | - | - | - | - |
| | | Current | A | - | - | - | - | - | - |
| | | Breaker | A | - | - | - | - | - | - |
| Water circulation pump (Primary circuit) | Type | | - | DC motor | DC motor | DC motor | DC motor | DC motor | DC motor |
| | Input (10/20/max L/min)*3 | Speed 1 | W | 10/13/15 | 10/13/15 | 10/13/15 | 10/13/15 | 31/37/38 | 31/37/38 |
| | | Speed 2 | W | 16/21/27 | 16/21/27 | 16/21/27 | 16/21/27 | 51/63/38 | 51/63/38 |
| | | Speed 3 | W | 24/32/42 | 24/32/42 | 24/32/42 | 24/32/42 | 75/94/105 | 75/94/105 |
| | | Speed 4 | W | 34/46/58 | 34/46/58 | 34/46/58 | 34/46/58 | 106/134/153 | 106/134/153 |
| | | Speed 5 | W | 47/58/60 | 47/58/60 | 47/58/60 | 47/58/60 | 148/180/180 | 148/180/180 |
| Performance curve: please refer to section 5.6.4 | Current (10/20/max L/min)*3 | Speed 1 | A | 0.2/0.2/0.3 | 0.2/0.2/0.3 | 0.2/0.2/0.3 | 0.2/0.2/0.3 | 0.3/0.3/0.3 | 0.3/0.3/0.3 |
| | | Speed 2 | A | 0.2/0.3/0.4 | 0.2/0.3/0.4 | 0.2/0.3/0.4 | 0.2/0.3/0.4 | 0.4/0.5/0.5 | 0.4/0.5/0.5 |
| | | Speed 3 | A | 0.3/0.4/0.5 | 0.3/0.4/0.5 | 0.3/0.4/0.5 | 0.3/0.4/0.5 | 0.6/0.7/0.8 | 0.6/0.7/0.8 |
| | | Speed 4 | A | 0.4/0.5/0.6 | 0.4/0.5/0.6 | 0.4/0.5/0.6 | 0.4/0.5/0.6 | 0.9/1.1/1.2 | 0.9/1.1/1.2 |
| | | Speed 5 | A | 0.5/0.6/0.6 | 0.5/0.6/0.6 | 0.5/0.6/0.6 | 0.5/0.6/0.6 | 1.2/1.4/1.4 | 1.2/1.4/1.4 |
| Water circulation pump (DHW circuit) | Input | Speed Ⅰ | W | - | - | - | - | - | - |
| | | Speed Ⅱ (Default setting) | W | - | - | - | - | - | - |
| | | Speed Ⅲ | W | - | - | - | - | - | - |
| | Current | Speed Ⅰ | A | - | - | - | - | - | - |
| | | Speed Ⅱ (Default setting) | A | - | - | - | - | - | - |
| | | Speed Ⅲ | A | - | - | - | - | - | - |
| | Flow rate | Speed Ⅰ | L/min | - | - | - | - | - | - |
| | | Speed Ⅱ (Default setting) | L/min | - | - | - | - | - | - |
| | | Speed Ⅲ | L/min | - | - | - | - | - | - |
| Flow rate | Primary circuit | Max.*4 | L/min | 36.9 | 36.9 | 36.9 | 36.9 | 61.5 | 61.5 |
| | | Min.*5 | L/min | 5.0 | 5.0 | 5.0 | 5.0 | 5.0 | 5.0 |
| Heat exchanger | Refrigerant - Primary circuit water | | - | MWA1-44DM | MWA1-44DM | MWA2-38PA-4 | MWA2-38PA-4 | MWA2-72PA | MWA2-72PA |
| | Primary circuit water - Domestic hot water | | - | - | - | - | - | - | - |
| Domestic hot water tank | Volume | | L | - | - | - | - | - | - |
| | Material | | - | - | - | - | - | - | - |
| | Declared load profile | | - | - | - | - | - | - | - |
| | Average climate | $\eta_{wh}$ (water heating efficiency)*6 | - | - | - | - | - | - | - |
| | | $P_{es}$ (standby power input)*6 | kW | - | - | - | - | - | - |
| | | Water heater energy efficiency class | - | - | - | - | - | - | - |
| | | Heat loss *7 | kWh/24hr | - | - | - | - | - | - |
| Expansion vessel (Primary circuit) | Volume | | L | 10 | 10 | 10 | 10 | - | - |
| | Charge pressure | | MPa | 0.1 | 0.1 | 0.1 | 0.1 | - | - |
| Safety device | Primary circuit | Control thermistor | °C | 1~80 | 1~80 | 1~80 | 1~80 | 1 to 80 | 1 to 80 |
| | | Pressure relief valve | MPa | 0.3 | 0.3 | 0.3 | 0.3 | 0.3 | 0.3 |
| | | Flow sensor (Min. flow) | L/min | 5.0 | 5.0 | 5.0 | 5.0 | 5.0 | 5.0 |
| | | BH manual reset thermostat | °C | 90 | 90 | 90 | 90 | 90 | - |
| | | BH thermal Cut Off | °C | 121 | 121 | 121 | 121 | 121 | - |
| | DHW tank | Control thermistor | °C | - | - | - | - | - | - |
| | | IH manual reset thermostat | °C | - | - | - | - | - | - |
| | | Temperature & pressure relief valve | °C | - | - | - | - | - | - |
| | | | MPa | - | - | - | - | - | - |
| Connections | Water | Primary circuit | mm | G1-A | G1-A | G1-A | G1-A | G1-1/2 -B | G1-1/2 -B |
| | | DHW circuit | mm | - | - | - | - | - | - |
| | Refrigerant | Gas | mm | φ12.7 | φ12.7 | φ15.88 | φ15.88 | φ25.4(Brazing) | φ25.4(Brazing) |
| | | Liquid | mm | φ6.35 | φ6.35 | φ9.52 | φ9.52 | φ9.52 | φ9.52 |
| Refrigerant *8 | | | - | R32/R410A | R32/R410A | R410A | R410A | R410A | R410A |
| Guaranteed operating range *9 | Ambient | | °C | 0~35 | 0~35 | 0~35 | 0~35 | 0 to 35 | 0 to 35 |
| | | | %RH | ≦80 | ≦80 | ≦80 | ≦80 | ≦80 | ≦80 |
| | Outdoor temperature | Heating | °C | See outdoor unit spec table | | | | | |
| | | Cooling | °C | 10 to 46 | 10 to 46 | 10 to 46 | 10 to 46 | 10 to 46 | 10 to 46 |
| Operating range | Heating | Room temperature | °C | 10~30 | 10~30 | 10~30 | 10~30 | 10 to 30 | 10 to 30 |
| | | Flow temperature | °C | 20~60 | 20~60 | 20~60 | 20~60 | 20 to 60 | 20 to 60 |
| | Cooling | Room temperature | °C | - | - | - | - | - | - |
| | | Flow temperature | °C | 5~25 | 5~25 | 5~25 | 5~25 | 5 to 25 | 5 to 25 |
| | DHW *10 | | °C | - | - | - | - | - | - |
| | Legionella prevention *10 | | °C | - | - | - | - | - | - |
| Sound power level (PWL) | | | dB(A) | 41 | 41 | 40 | 40 | 45 | 45 |

*1 Volume of sanitary water circuit, primary DHW circuit (from 3-way valve to confluent point with Heating circuit), piping to Expansion vessel, and Expansion vessel is not included in this value.
*2 When powered from independent source.
*3 Allowable flow rate range differs depending on connected outdoor unit. Please refer to section 5.6.4.
*4 If the water flow rate range exceeds maximum, the flow speed will be greater than 2.0 m/s, which could corrode the pipes.
*5 If the water flow is less than the minimum, the flow error will be activated.
*6 Hot water performance differs depending on connected outdoor unit.
*7 24h temperature decay at top of the tank from 65degC at ambient temperature 20degC (BS EN 12897)
*8 Refrigerant of outdoor unit connected to cylinder unit.
*9 The enviroment must be frost-free.
*10 For the model without both booster heater and immersion heater, the max. hot water temperature is [Max. outlet water of outdoor unit -3°C]. For the max. outlet of outdoor unit spec table.

# 2 Specifications

| Model name | | | | EHPX-MED | EHPX-VM2D | EHPX-VM6D | EHPX-YM9D | EHPX-YM9ED |
|---|---|---|---|---|---|---|---|---|
| Dimensions | Without package | Height | mm | 800 | 800 | 800 | 800 | 800 |
| | | Width | mm | 530 | 530 | 530 | 530 | 530 |
| | | Depth | mm | 360 | 360 | 360 | 360 | 360 |
| | With package | Height | mm | 560 | 560 | 560 | 560 | 560 |
| | | Width | mm | 600 | 600 | 600 | 600 | 600 |
| | | Depth | mm | 990 | 990 | 990 | 990 | 990 |
| Casing | Munsell | | - | 6.2PB 9/0.9 | 6.2PB 9/0.9 | 6.2PB 9/0.9 | 6.2PB 9/0.9 | 6.2PB 9/0.9 |
| | RAL code | | - | 260 90 05 | 260 90 05 | 260 90 05 | 260 90 05 | 260 90 05 |
| | Material | | - | Pre-coated metal | Pre-coated metal | Pre-coated metal | Pre-coated metal | Pre-coated metal |
| Product weight (empty) | | | kg | 25 | 32 | 33 | 33 | 28 |
| Product weight (full) | | | kg | 26 | 36 | 37 | 38 | 32 |
| Gross weight | | | kg | 38 | 45 | 46 | 46 | 41 |
| Water volume of heating circuit in the unit *1 | | | L | 1.0 | 4.5 | 4.5 | 4.5 | 4.5 |
| Type of Installation | | | - | Wall mounted | Wall mounted | Wall mounted | Wall mounted | Wall mounted |
| Electrical data | Control board *2 (Including 3 pumps) | Power supply | Ph | ~/N | ~/N | ~/N | ~/N | ~/N |
| | | | V | 230 | 230 | 230 | 230 | 230 |
| | | | Hz | 50 | 50 | 50 | 50 | 50 |
| | | Input | kW | 0.30 | 0.30 | 0.30 | 0.30 | 0.30 |
| | | Current | A | 1.95 | 1.95 | 1.95 | 1.95 | 1.95 |
| | | Breaker | A | 10 | 10 | 10 | 10 | 10 |
| | Booster heater | Power supply | Ph | - | ~/N | ~/N | 3~ | 3~ |
| | | | V | - | 230 | 230 | 400 | 400 |
| | | | Hz | - | 50 | 50 | 50 | 50 |
| | | Capacity | kW | - | 2 | 2+4 | 3+6 | 3+6 |
| | | Heater step | - | - | 1 | 3 | 3 | 3 |
| | | Current | A | - | 9 | 26 | 13 | 13 |
| | | Breaker | A | - | 16 | 32 | 16 | 16 |
| | Immersion heater | Power supply | Ph | - | - | - | - | - |
| | | | V | - | - | - | - | - |
| | | | Hz | - | - | - | - | - |
| | | Capacity | kW | - | - | - | - | - |
| | | Current | A | - | - | - | - | - |
| | | Breaker | A | - | - | - | - | - |
| Water circulation pump (Primary circuit) | Type | | - | DC motor | DC motor | DC motor | DC motor | DC motor |
| | Input (10/20/max L/min)*3 | Speed 1 | W | 10/13/15 | 10/13/15 | 10/13/15 | 10/13/15 | 10/13/15 |
| | | Speed 2 | W | 16/21/27 | 16/21/27 | 16/21/27 | 16/21/27 | 16/21/27 |
| | | Speed 3 | W | 24/32/42 | 24/32/42 | 24/32/42 | 24/32/42 | 24/32/42 |
| | | Speed 4 | W | 34/46/58 | 34/46/58 | 34/46/58 | 34/46/58 | 34/46/58 |
| | | Speed 5 | W | 47/58/60 | 47/58/60 | 47/58/60 | 47/58/60 | 47/58/60 |
| Performance curve: please refer to section 5.6.4 | Current (10/20/max L/min)*3 | Speed 1 | A | 0.2/0.2/0.3 | 0.2/0.2/0.3 | 0.2/0.2/0.3 | 0.2/0.2/0.3 | 0.2/0.2/0.3 |
| | | Speed 2 | A | 0.2/0.3/0.4 | 0.2/0.3/0.4 | 0.2/0.3/0.4 | 0.2/0.3/0.4 | 0.2/0.3/0.4 |
| | | Speed 3 | A | 0.3/0.4/0.5 | 0.3/0.4/0.5 | 0.3/0.4/0.5 | 0.3/0.4/0.5 | 0.3/0.4/0.5 |
| | | Speed 4 | A | 0.4/0.5/0.6 | 0.4/0.5/0.6 | 0.4/0.5/0.6 | 0.4/0.5/0.6 | 0.4/0.5/0.6 |
| | | Speed 5 | A | 0.5/0.6/0.6 | 0.5/0.6/0.6 | 0.5/0.6/0.6 | 0.5/0.6/0.6 | 0.5/0.6/0.6 |
| Water circulation pump (DHW circuit) | Input | Speed Ⅰ | W | - | - | - | - | - |
| | | Speed Ⅱ (Default setting) | W | - | - | - | - | - |
| | | Speed Ⅲ | W | - | - | - | - | - |
| | Current | Speed Ⅰ | A | - | - | - | - | - |
| | | Speed Ⅱ (Default setting) | A | - | - | - | - | - |
| | | Speed Ⅲ | A | - | - | - | - | - |
| | Flow rate | Speed Ⅰ | L/min | - | - | - | - | - |
| | | Speed Ⅱ (Default setting) | L/min | - | - | - | - | - |
| | | Speed Ⅲ | L/min | - | - | - | - | - |
| Flow rate | Primary circuit | Max.*4 | L/min | 36.9 | 36.9 | 36.9 | 36.9 | 36.9 |
| | | Min.*5 | L/min | 5.0 | 5.0 | 5.0 | 5.0 | 5.0 |
| Heat exchanger | Refrigerant - Primary circuit water | | - | - | - | - | - | - |
| | Primary circuit water - Domestic hot water | | - | - | - | - | - | - |
| Domestic hot water tank | Volume | | L | - | - | - | - | - |
| | Material | | - | - | - | - | - | - |
| | Declared load profile | | - | - | - | - | - | - |
| | Average climate | $\eta_{wh}$ (water heating efficiency)*6 | - | - | - | - | - | - |
| | | $P_{es}$ (standby power input)*6 | kW | - | - | - | - | - |
| | | Water heater energy efficiency class | - | - | - | - | - | - |
| | | Heat loss *7 | kWh/24hr | - | - | - | - | - |
| Expansion vessel (Primary circuit) | Volume | | L | - | 10 | 10 | 10 | - |
| | Charge pressure | | MPa | - | 0.1 | 0.1 | 0.1 | - |
| Safety device | Primary circuit | Control thermistor | °C | 1 to 80 | 1 to 80 | 1 to 80 | 1 to 80 | 1 to 80 |
| | | Pressure relief valve | MPa | 0.3 | 0.3 | 0.3 | 0.3 | 0.3 |
| | | Flow sensor (Min. flow) | L/min | 5.0 | 5.0 | 5.0 | 5.0 | 5.0 |
| | | BH manual reset thermostat | °C | - | 90 | 90 | 90 | 90 |
| | | BH thermal Cut Off | °C | - | 121 | 121 | 121 | 121 |
| | DHW tank | Control thermistor | °C | - | - | - | - | - |
| | | IH manual reset thermostat | °C | - | - | - | - | - |
| | | Temperature & pressure relief valve | °C | - | - | - | - | - |
| | | | MPa | - | - | - | - | - |
| Connections | Water | Primary circuit | mm | φ28 | φ28 | φ28 | φ28 | φ28 |
| | | DHW circuit | mm | - | - | - | - | - |
| | Refrigerant | Gas | mm | - | - | - | - | - |
| | | Liquid | mm | - | - | - | - | - |
| Refrigerant *8 | | | - | R32 | R32 | R32 | R32 | R32 |
| Guaranteed operating range *9 | Ambient | | °C | 0~35 | 0~35 | 0~35 | 0~35 | 0~35 |
| | | | %RH | ≦80 | ≦80 | ≦80 | ≦80 | ≦80 |
| | Outdoor temperature | Heating | °C | See outdoor unit spec table | | | | |
| | | Cooling | °C | | | | | |
| Operating range | Heating | Room temperature | °C | 10 to 30 | 10 to 30 | 10 to 30 | 10 to 30 | 10 to 30 |
| | | Flow temperature | °C | 20 to 60 | 20 to 60 | 20 to 60 | 20 to 60 | 20 to 60 |
| | Cooling | Room temperature | °C | - | - | - | - | - |
| | | Flow temperature | °C | - | - | - | - | - |
| | DHW *10 | | °C | - | - | - | - | - |
| | Legionella prevention *10 | | °C | - | - | - | - | - |
| Sound power level (PWL) | | | dB(A) | 40 | 40 | 40 | 40 | 40 |

*1 Volume of sanitary water circuit, primary DHW circuit (from 3-way valve to confluent point with Heating circuit), piping to Expansion vessel, and Expansion vessel is not included in this value.
*2 When powered from independent source.
*3 Allowable flow rate range differs depending on connected outdoor unit. Please refer to section 5.6.4.
*4 If the water flow rate range exceeds maximum, the flow speed will be greater than 2.0 m/s, which could corrode the pipes.
*5 If the water flow is less than the minimum, the flow error will be activated.
*6 Hot water performance differs depending on connected outdoor unit.
*7 24h temperature decay at top of the tank from 65degC at ambient temperature 20degC (BS EN 12897)
*8 Refrigerant of outdoor unit connected to cylinder unit.
*9 The enviroment must be frost-free.
*10 For the model without both booster heater and immersion heater, the max. hot water temperature is [Max. outlet water of outdoor unit -3°C]. For the max. outlet of outdoor unit spec table.

# 2 Specifications

| Model name | | | | ERPX-MD | ERPX-VM2D | ERPX-VM6D | ERPX-YM9D |
|---|---|---|---|---|---|---|---|
| Dimensions | Without package | Height | mm | 800 | 800 | 800 | 800 |
| | | Width | mm | 530 | 530 | 530 | 530 |
| | | Depth | mm | 360 | 360 | 360 | 360 |
| | With package | Height | mm | 560 | 560 | 560 | 560 |
| | | Width | mm | 600 | 600 | 600 | 600 |
| | | Depth | mm | 990 | 990 | 990 | 990 |
| Casing | Munsell | | - | 6.2PB 9/0.9 | 6.2PB 9/0.9 | 6.2PB 9/0.9 | 6.2PB 9/0.9 |
| | RAL code | | - | 260 90 05 | 260 90 05 | 260 90 05 | 260 90 05 |
| | Material | | - | Pre-coated metal | Pre-coated metal | Pre-coated metal | Pre-coated metal |
| Product weight (empty) | | | kg | 30 | 33 | 34 | 35 |
| Product weight (full) | | | kg | 31 | 37 | 38 | 39 |
| Gross weight | | | kg | 44 | 46 | 47 | 48 |
| Water volume of heating circuit in the unit *1 | | | L | 1.0 | 4.5 | 4.5 | 4.5 |
| Type of Installation | | | - | Wall mounted | Wall mounted | Wall mounted | Wall mounted |
| Electrical data | Control board *2 (Including 3 pumps) | Power supply | Ph | ~/N | ~/N | ~/N | ~/N |
| | | | V | 230 | 230 | 230 | 230 |
| | | | Hz | 50 | 50 | 50 | 50 |
| | | Input | kW | 0.30 | 0.30 | 0.30 | 0.30 |
| | | Current | A | 1.95 | 1.95 | 1.95 | 1.95 |
| | | Breaker | A | 10 | 10 | 10 | 10 |
| | Booster heater | Power supply | Ph | - | ~/N | ~/N | 3~ |
| | | | V | - | 230 | 230 | 400 |
| | | | Hz | - | 50 | 50 | 50 |
| | | Capacity | kW | - | 2 | 2+4 | 3+6 |
| | | Heater step | - | - | 1 | - | 3 |
| | | Current | A | - | 9 | 26 | 13 |
| | | Breaker | A | - | 16 | 32 | 16 |
| | Immersion heater | Power supply | Ph | - | - | - | - |
| | | | V | - | - | - | - |
| | | | Hz | - | - | - | - |
| | | Capacity | kW | - | - | - | - |
| | | Current | A | - | - | - | - |
| | | Breaker | A | - | - | - | - |
| Water circulation pump (Primary circuit) | Type | | - | DC motor | DC motor | DC motor | DC motor |
| | Input (10/20/max L/min)*3 | Speed 1 | W | 10/13/15 | 10/13/15 | 10/13/15 | 10/13/15 |
| | | Speed 2 | W | 16/21/27 | 16/21/27 | 16/21/27 | 16/21/27 |
| | | Speed 3 | W | 24/32/42 | 24/32/42 | 24/32/42 | 24/32/42 |
| | | Speed 4 | W | 34/46/58 | 34/46/58 | 34/46/58 | 34/46/58 |
| | | Speed 5 | W | 47/58/60 | 47/58/60 | 47/58/60 | 47/58/60 |
| Performance curve: please refer to section 5.6.4 | Current (10/20/max L/min)*3 | Speed 1 | A | 0.2/0.2/0.3 | 0.2/0.2/0.3 | 0.2/0.2/0.3 | 0.2/0.2/0.3 |
| | | Speed 2 | A | 0.2/0.3/0.4 | 0.2/0.3/0.4 | 0.2/0.3/0.4 | 0.2/0.3/0.4 |
| | | Speed 3 | A | 0.3/0.4/0.5 | 0.3/0.4/0.5 | 0.3/0.4/0.5 | 0.3/0.4/0.5 |
| | | Speed 4 | A | 0.4/0.5/0.6 | 0.4/0.5/0.6 | 0.4/0.5/0.6 | 0.4/0.5/0.6 |
| | | Speed 5 | A | 0.5/0.6/0.6 | 0.5/0.6/0.6 | 0.5/0.6/0.6 | 0.5/0.6/0.6 |
| Water circulation pump (DHW circuit) | Input | Speed Ⅰ | W | - | - | - | - |
| | | Speed Ⅱ (Default setting) | W | - | - | - | - |
| | | Speed Ⅲ | W | - | - | - | - |
| | Current | Speed Ⅰ | A | - | - | - | - |
| | | Speed Ⅱ (Default setting) | A | - | - | - | - |
| | | Speed Ⅲ | A | - | - | - | - |
| | Flow rate | Speed Ⅰ | L/min | - | - | - | - |
| | | Speed Ⅱ (Default setting) | L/min | - | - | - | - |
| | | Speed Ⅲ | L/min | - | - | - | - |
| Flow rate | Primary circuit | Max.*4 | L/min | 36.9 | 36.9 | 36.9 | 36.9 |
| | | Min.*5 | L/min | 5.0 | 5.0 | 5.0 | 5.0 |
| Heat exchanger | Refrigerant - Primary circuit water | | - | - | - | - | - |
| | Primary circuit water - Domestic hot water | | - | - | - | - | - |
| Domestic hot water tank | Volume | | L | - | - | - | - |
| | Material | | - | - | - | - | - |
| | Declared load profile | | - | - | - | - | - |
| | Average climate | $\eta_{wh}$ (water heating efficiency)*6 | - | - | - | - | - |
| | | $P_{es}$ (standby power input)*6 | kW | - | - | - | - |
| | | Water heater energy efficiency class | - | - | - | - | - |
| | | Heat loss *7 | kWh/24hr | - | - | - | - |
| Expansion vessel (Primary circuit) | Volume | | L | 10 | 10 | 10 | 10 |
| | Charge pressure | | MPa | 0.1 | 0.1 | 0.1 | 0.1 |
| Safety device | Primary circuit | Control thermistor | °C | 1~80 | 1~80 | 1~80 | 1~80 |
| | | Pressure relief valve | MPa | 0.3 | 0.3 | 0.3 | 0.3 |
| | | Flow sensor (Min. flow) | L/min | 5.0 | 5.0 | 5.0 | 5.0 |
| | | BH manual reset thermostat | °C | 90 - | 90 | 90 | 90 |
| | | BH thermal Cut Off | °C | 121 - | 121 | 121 | 121 |
| | DHW tank | Control thermistor | °C | - | - | - | - |
| | | IH manual reset thermostat | °C | - | - | - | - |
| | | Temperature & pressure relief valve | °C | - | - | - | - |
| | | | MPa | - | - | - | - |
| Connections | Water | Primary circuit | mm | G1-A | G1-A | G1-A | G1-A |
| | | DHW circuit | mm | - | - | - | - |
| | Refrigerant | Gas | mm | - | - | - | - |
| | | Liquid | mm | - | - | - | - |
| Refrigerant *8 | | | - | Water | Water | Water | Water |
| Guaranteed operating range *9 | Ambient | | °C | 0~35 | 0~35 | 0~35 | 0~35 |
| | | | %RH | ≦80 | ≦80 | ≦80 | ≦80 |
| | Outdoor temperature | Heating | °C | See outdoor unit spec table | | | |
| | | Cooling | °C | 10 to 46 | 10 to 46 | 10 to 46 | 10 to 46 |
| Operating range | Heating | Room temperature | °C | 10~30 | 10~30 | 10~30 | 10~30 |
| | | Flow temperature | °C | 20~60 | 20~60 | 20~60 | 20~60 |
| | Cooling | Room temperature | °C | - | - | - | - |
| | | Flow temperature | °C | 5~25 | 5~25 | 5~25 | 5~25 |
| | DHW *10 | | °C | - | - | - | - |
| | Legionella prevention *10 | | °C | - | - | - | - |
| Sound power level (PWL) | | | dB(A) | 40 | 40 | 40 | 40 |

*1 Volume of sanitary water circuit, primary DHW circuit (from 3-way valve to confluent point with Heating circuit), piping to Expansion vessel, and Expansion vessel is not included in this value.
*2 When powered from independent source.
*3 Allowable flow rate range differs depending on connected outdoor unit. Please refer to section 5.6.4.
*4 If the water flow rate range exceeds maximum, the flow speed will be greater than 2.0 m/s, which could corrode the pipes.
*5 If the water flow is less than the minimum, the flow error will be activated.
*6 Hot water performance differs depending on connected outdoor unit.
*7 24h temperature decay at top of the tank from 65degC at ambient temperature 20degC (BS EN 12897)
*8 Refrigerant of outdoor unit connected to cylinder unit.
*9 The enviroment must be frost-free.
*10 For the model without both booster heater and immersion heater, the max. hot water temperature is [Max. outlet water of outdoor unit -3°C]. For the max. outlet of outdoor unit spec table.

## 2.3. Ground source heat pump (GSHP)

| Model name | | | | EHGT17D-YM9ED |
|---|---|---|---|---|
| Dimensions | Height | | mm | 1750 |
| | Width | | mm | 595 |
| | Depth | | mm | 680 |
| Casing | Munsell | | - | 6.2PB 9/0.9 |
| | RAL code | | - | 260 90 05 |
| | Material | | - | Pre-coated metal |
| Product weight (empty) | | | kg | 181 |
| Product weight (full) | | | kg | 360 |
| Gross weight | | | kg | 198 |
| Water volume of heating circuit in the unit *1 | | | L | 5.47 |
| Brine volume of brine circuit in the unit | | | L | 3.11 |
| Type of Installation | | | - | Floor standing |
| Electrical data | Heat pump (exclude booster heater) | Power supply | Ph | 3N~ |
| | | | V | 400 |
| | | | Hz | 50 |
| | | Breaker | A | 16 |
| | Booster heater | Power supply | Ph | 3~ |
| | | | V | 400 |
| | | | Hz | 50 |
| | | Capacity | kW | 9 |
| | | Heater step | - | 3 |
| | | Current | A | 13 |
| | | Breaker | A | 16 |
| | Immersion heater | Power supply | Ph | - |
| | | | V | - |
| | | | Hz | - |
| | | Capacity | kW | - |
| | | Current | A | - |
| | | Breaker | A | - |
| Water circulation pump (Primary circuit) | Type | | | DC motor |
| | Input (10/20/max L/min) | Speed 1 | | 10/13/15 |
| | | Speed 2 | | 16/21/27 |
| | | Speed 3 | | 24/32/42 |
| | | Speed 4 | | 34/46/58 |
| | | Speed 5 | | 47/58/60 |
| Performance curve: please refer to section 4.6.4 | Current (10/20/max L/min) | Speed 1 | | 0.2/0.2/0.3 |
| | | Speed 2 | | 0.2/0.3/0.4 |
| | | Speed 3 | | 0.3/0.4/0.5 |
| | | Speed 4 | | 0.4/0.5/0.6 |
| | | Speed 5 | | 0.5/0.6/0.6 |
| Water circulation pump (DHW circuit) | Input | Speed Ⅰ | | 55 |
| | | Speed Ⅱ (Default setting) | | 69 |
| | | Speed Ⅲ | | 80 |
| | Current | Speed Ⅰ | | 0.25 |
| | | Speed Ⅱ (Default setting) | | 0.31 |
| | | Speed Ⅲ | | 0.34 |
| | Flow rate | Speed Ⅰ | | 13.5 |
| | | Speed Ⅱ (Default setting) | | 19.0 |
| | | Speed Ⅲ | | 22.9 |
| Flow rate | Primary circuit | Max.*2 | L/min | 27.7 |
| | | Min.*3 | L/min | 7.1 |
| Heat exchanger | Brine circuit - Refrigerant | | - | MWA1-70PA |
| | Refrigerant - Primary circuit water | | - | MWA1-44PA |
| | Primary circuit water - Domestic hot water | | - | CBH18-18H |
| Domestic hot water tank | Volume | | L | 170 |
| | Material | | - | Duplex 2304 stainless steel (EN10088) |
| | Declared load profile | | - | L |
| | Average climate | $\eta_{wh}$ (water heating efficiency) | - | 134 |
| | | Water heater energy efficiency class | - | A+ |
| Expansion vessel (Primary circuit) | Volume | | L | - |
| | Charge pressure | | MPa | - |
| Safety device | Primary circuit | Control thermistor | °C | 1 to 80 |
| | | Pressure relief valve | MPa | 0.3 |
| | | Flow sensor (Min. flow) | L/min | 5.0 |
| | | BH manual reset thermostat | °C | 90 |
| | | BH thermal Cut Off | °C | 121 |
| | DHW tank | Control thermistor | °C | 40 to 70 |
| | | IH manual reset thermostat | °C | - |
| | | Temperature & pressure relief valve | °C | - |
| | | | MPa | - |
| Brine circuit | Control thermistor | | °C | -8 to 30 |
| | Flow switch (Min. flow) | | L/min | 5.5 |
| Refrigerant circuit | Control thermistor (High) | | °C | -20 to 125 |
| | Control thermistor (Low) | | °C | -40 to 90 |
| | Pressure switch | | MPa | 4.14 ± 0.1 |
| | Pressure sensor | | MPa | 0 to 5.0 |
| Connections | Water | Primary circuit | mm | φ28 |
| | | DHW circuit | mm | φ22 |
| | Brine | | mm | φ28 |
| Refrigerant | | | - | R32 |
| Guaranteed operating range *4 | Ambient | | °C | 0 to 35 |
| | | | %RH | ≦80 |
| Operating range | Heating | Room temperature | °C | 10 to 30 |
| | | Flow temperature | °C | 20 to 60 |
| | DHW | | °C | 40 to 60 |
| | Legionella prevention | | °C | 60 to 70 |
| Sound power level | | | dB(A) | 42 |

*1 Volume of sanitary water circuit is not included in this value.
*2 If the water flow rate exceeds maximum, the flow speed will be greater than 2.0 m/s, which could corrode the pipes.
*3 If the water flow is less than the minimum, the flow error will be activated.
*4 The environment must be frost-free.

## 2.4 Water to Water Heat Pump (WTW)

| Model name | | | | EHWT17D-MHEDW |
|---|---|---|---|---|
| Dimensions | Height | | mm | 1750 |
| | Width | | mm | 595 |
| | Depth | | mm | 680 |
| Casing | Munsell | | - | 6.2PB 9/0.9 |
| | RAL code | | - | 260 90 05 |
| | Material | | - | Pre-coated metal |
| Product weight (empty) | | | kg | 166 |
| Product weight (full) | | | kg | 345 |
| Gross weight | | | kg | 183 |
| Water volume of heating circuit in the unit *1 | | | L | 5.47 |
| Brine/Water volume of ambient loop circuit in the unit | | | L | 3.16 |
| Type of Installation | | | - | Floor standing |
| Electrical data | Heat pump (exclude immersion heater) | Power supply | Ph | ~/N |
| | | | V | 230 |
| | | | Hz | 50 |
| | | Breaker | A | 16 |
| | Booster heater | Power supply | Ph | - |
| | | | V | - |
| | | | Hz | - |
| | | Capacity | kW | - |
| | | Heater step | - | - |
| | | Current | A | - |
| | | Breaker | A | - |
| | Immersion heater | Power supply | Ph | ~/N |
| | | | V | 230 |
| | | | Hz | 50 |
| | | Capacity | kW | 3 |
| | | Current | A | 13 |
| | | Breaker | A | 16 |
| Water circulation pump (Primary circuit) | Type | | | DC motor |
| | Input (10/20/max L/min) | Speed 1 | | 10/13/15 |
| | | Speed 2 | | 16/21/27 |
| | | Speed 3 | | 24/32/42 |
| | | Speed 4 | | 34/46/58 |
| | | Speed 5 | | 47/58/60 |
| Performance curve: please refer to section 4.6.4 | Current (10/20/max L/min) | Speed 1 | | 0.2/0.2/0.3 |
| | | Speed 2 | | 0.2/0.3/0.4 |
| | | Speed 3 | | 0.3/0.4/0.5 |
| | | Speed 4 | | 0.4/0.5/0.6 |
| | | Speed 5 | | 0.5/0.6/0.6 |
| Water circulation pump (DHW circuit) | Input | Speed Ⅰ | | 55 |
| | | Speed Ⅱ (Default setting) | | 69 |
| | | Speed Ⅲ | | 80 |
| | Current | Speed Ⅰ | | 0.25 |
| | | Speed Ⅱ (Default setting) | | 0.31 |
| | | Speed Ⅲ | | 0.34 |
| | Flow rate | Speed Ⅰ | | 13.5 |
| | | Speed Ⅱ (Default setting) | | 19.0 |
| | | Speed Ⅲ | | 22.9 |
| Flow rate | Primary circuit | Max.*2 | L/min | 27.7 |
| | | Min.*3 | L/min | 7.1 |
| | Ambient loop | Max.*2 | L/min | 24.0 |
| | | Min.*3 | L/min | 7.2 |
| Heat exchanger | Ambient loop circuit - Refrigerant | | - | MWA1-70PA |
| | Refrigerant - Primary circuit water | | - | MWA1-44PA |
| | Primary circuit water - Domestic hot water | | - | CBH18-18H |
| Domestic hot water tank | Volume | | L | 170 |
| | Material | | - | Duplex 2101 stainless steel (EN10088) |
| | Declared load profile | | - | L |
| | Average climate | $\eta_{wh}$ (water heating efficiency) | - | 171 |
| | | Water heater energy efficiency class | - | A+ |
| Expansion vessel (Primary circuit) | Volume | | L | - |
| | Charge pressure | | MPa | - |
| Safety device | Primary circuit | Control thermistor | °C | 1 to 80 |
| | | Pressure relief valve | MPa | 0.3 |
| | | Flow sensor (Min. flow) | L/min | 5.0 |
| | | BH manual reset thermostat | °C | - |
| | | BH thermal Cut Off | °C | - |
| | DHW tank | Control thermistor | °C | 40 to 70 |
| | | IH manual reset thermostat | °C | 85 |
| | | Temperature & pressure relief valve | °C | 90 |
| | | | MPa | 0.7 |
| Ambient loop | Control thermistor | | °C | 10 to 30 |
| | Flow switch (Min. flow) | | L/min | 5.5 |
| Refrigerant circuit | Control thermistor (High) | | °C | -20 to 125 |
| | Control thermistor (Low) | | °C | -40 to 90 |
| | Pressure switch | | MPa | 4.14 ± 0.1 |
| | Pressure sensor | | MPa | 0 to 5.0 |
| Connections | Water | Primary circuit | mm | φ28 |
| | | DHW circuit | mm | φ22 |
| | Ambient loop | | mm | φ22 |
| Refrigerant | | | - | R32 |
| Guaranteed operating range | Ambient *4 | | °C | 0 to 35 |
| | | | %RH | ≦80 |
| | Water inlet temperature (Ambient loop) | | °C | 10 to 30 |
| | Min. Water outlet temperature (Ambient loop) | | °C | 4 |
| Operating range | Heating | Room temperature | °C | 10 to 30 |
| | | Flow temperature | °C | 20 to 60 |
| | DHW | | °C | 40 to 60 |
| | Legionella prevention | | °C | 60 to 70 |
| Sound power level | | | dB(A) | 38 |

*1 Volume of sanitary water circuit is not included in this value.
*2 If the water flow rate exceeds maximum, the flow speed will be greater than 2.0 m/s, which could corrode the pipes.
*3 If the water flow is less than the minimum, the flow error will be activated.
*4 The environment must be frost-free.

## 3.1 Combination performance

### ■ Packaged type

| | | | Cylinder unit | | | | | | | | | | | | | | | | Hydrobox | | | | | | | | |
|---|---|---|---|---|---|---|---|---|---|---|---|---|---|---|---|---|---|---|---|---|---|---|---|---|---|---|---|
| | | | ERPT17X-VM2D | ERPT20X-VM2D | ERPT20X-MD | ERPT20X-VM6D | ERPT30X-VM2ED | ERPT30X-VM6ED | EHPT17X-VM2D | EHPT17X-VM6D | EHPT17X-YM9D | EHPT20X-MED | EHPT20X-VM6D | EHPT20X-YM9D | EHPT20X-YM9ED | EHPT20X-TM9D | EHPT20X-MHEDW | EHPT30X-MED | EHPT30X-YM9ED | ERPX-MD | ERPX-VM2D | ERPX-VM6D | ERPX-YM9D | EHPX-VM2D | EHPX-VM6D | EHPX-YM9D | EHPX-MED | EHPX-YM9ED |
| Outdoor unit | | | PUZ-WM50VHA(-BS) | | | | | | | | | | | | | | | | | | | | | | | | |
| Heating A7/W35 | Capacity | kW | 5.00 | | | | - | | 5.00 | | | | | | | | | - | 5.00 | | | | | | | | |
| | COP | - | 5.00 | | | | - | | 5.00 | | | | | | | | | - | 5.00 | | | | | | | | |
| | Power input(*) | kW | 1.00 | | | | - | | 1.00 | | | | | | | | | - | 1.00 | | | | | | | | |
| Heating A7/W45 | Capacity | kW | 5.00 | | | | - | | 5.00 | | | | | | | | | - | 5.00 | | | | | | | | |
| | COP | - | 3.87 | | | | - | | 3.87 | | | | | | | | | - | 3.87 | | | | | | | | |
| | Power input(*) | kW | 1.29 | | | | - | | 1.29 | | | | | | | | | - | 1.29 | | | | | | | | |
| Heating A2/W35 | Capacity | kW | 5.00 | | | | - | | 5.00 | | | | | | | | | - | 5.00 | | | | | | | | |
| | COP | - | 3.70 | | | | - | | 3.70 | | | | | | | | | - | 3.70 | | | | | | | | |
| | Power input(*) | kW | 1.35 | | | | - | | 1.35 | | | | | | | | | - | 1.35 | | | | | | | | |
| Cooling A35/W7 | Capacity | kW | 4.50 | | | | - | | | | | | | | | | | | 4.50 | | | | - | | | | |
| | EER | - | 3.40 | | | | - | | | | | | | | | | | | 3.40 | | | | - | | | | |
| | Power input(*) | kW | 1.32 | | | | - | | | | | | | | | | | | 1.32 | | | | - | | | | |
| Cooling A35/W18 | Capacity | kW | 4.50 | | | | - | | | | | | | | | | | | 4.50 | | | | - | | | | |
| | EER | - | 5.00 | | | | - | | | | | | | | | | | | 5.00 | | | | - | | | | |
| | Power input(*) | kW | 0.90 | | | | - | | | | | | | | | | | | 0.90 | | | | - | | | | |
| Outdoor unit | | | PUZ-WM60VAA(-BS) | | | | | | | | | | | | | | | | | | | | | | | | |
| Heating A7/W35 | Capacity | kW | 6.00 | | | | - | | 6.00 | | | | | | | | | - | 6.00 | | | | | | | | |
| | COP | - | 5.06 | | | | - | | 5.06 | | | | | | | | | - | 5.06 | | | | | | | | |
| | Power input(*) | kW | 1.19 | | | | - | | 1.19 | | | | | | | | | - | 1.19 | | | | | | | | |
| Heating A7/W45 | Capacity | kW | 6.00 | | | | - | | 6.00 | | | | | | | | | - | 6.00 | | | | | | | | |
| | COP | - | 3.90 | | | | - | | 3.90 | | | | | | | | | - | 3.90 | | | | | | | | |
| | Power input(*) | kW | 1.54 | | | | - | | 1.54 | | | | | | | | | - | 1.54 | | | | | | | | |
| Heating A2/W35 | Capacity | kW | 6.00 | | | | - | | 6.00 | | | | | | | | | - | 6.00 | | | | | | | | |
| | COP | - | 3.75 | | | | - | | 3.75 | | | | | | | | | - | 3.75 | | | | | | | | |
| | Power input(*) | kW | 1.60 | | | | - | | 1.60 | | | | | | | | | - | 1.60 | | | | | | | | |
| Cooling A35/W7 | Capacity | kW | 6.00 | | | | - | | | | | | | | | | | | 6.00 | | | | - | | | | |
| | EER | - | 3.30 | | | | - | | | | | | | | | | | | 3.30 | | | | - | | | | |
| | Power input(*) | kW | 1.82 | | | | - | | | | | | | | | | | | 1.82 | | | | - | | | | |
| Cooling A35/W18 | Capacity | kW | 6.00 | | | | - | | | | | | | | | | | | 6.00 | | | | - | | | | |
| | EER | - | 4.45 | | | | - | | | | | | | | | | | | 4.45 | | | | - | | | | |
| | Power input(*) | kW | 1.35 | | | | - | | | | | | | | | | | | 1.35 | | | | - | | | | |
| Outdoor unit | | | PUZ-WM85VAA(-BS) | | | | | | | | | | | | | | | | | | | | | | | | |
| Heating A7/W35 | Capacity | kW | 8.50 | | | | | | | | | | | | | | | | | | | | | | | | |
| | COP | - | 4.80 | | | | | | | | | | | | | | | | | | | | | | | | |
| | Power input(*) | kW | 1.77 | | | | | | | | | | | | | | | | | | | | | | | | |
| Heating A7/W45 | Capacity | kW | 8.50 | | | | | | | | | | | | | | | | | | | | | | | | |
| | COP | - | 3.70 | | | | | | | | | | | | | | | | | | | | | | | | |
| | Power input(*) | kW | 2.30 | | | | | | | | | | | | | | | | | | | | | | | | |
| Heating A2/W35 | Capacity | kW | 8.50 | | | | | | | | | | | | | | | | | | | | | | | | |
| | COP | - | 3.51 | | | | | | | | | | | | | | | | | | | | | | | | |
| | Power input(*) | kW | 2.42 | | | | | | | | | | | | | | | | | | | | | | | | |
| Cooling A35/W7 | Capacity | kW | 7.50 | | | | | | - | | | | | | | | | | 7.50 | | | | - | | | | |
| | EER | - | 3.15 | | | | | | - | | | | | | | | | | 3.15 | | | | - | | | | |
| | Power input(*) | kW | 2.38 | | | | | | - | | | | | | | | | | 2.38 | | | | - | | | | |
| Cooling A35/W18 | Capacity | kW | 7.50 | | | | | | - | | | | | | | | | | 7.50 | | | | - | | | | |
| | EER | - | 4.90 | | | | | | - | | | | | | | | | | 4.90 | | | | - | | | | |
| | Power input(*) | kW | 1.53 | | | | | | - | | | | | | | | | | 1.53 | | | | - | | | | |
| Outdoor unit | | | PUZ-WM85YAA(-BS) | | | | | | | | | | | | | | | | | | | | | | | | |
| Heating A7/W35 | Capacity | kW | 8.50 | | | | | | | | | | | | | | | | | | | | | | | | |
| | COP | - | 4.70 | | | | | | | | | | | | | | | | | | | | | | | | |
| | Power input(*) | kW | 1.81 | | | | | | | | | | | | | | | | | | | | | | | | |
| Heating A7/W45 | Capacity | kW | 8.50 | | | | | | | | | | | | | | | | | | | | | | | | |
| | COP | - | 3.70 | | | | | | | | | | | | | | | | | | | | | | | | |
| | Power input(*) | kW | 2.30 | | | | | | | | | | | | | | | | | | | | | | | | |
| Heating A2/W35 | Capacity | kW | 11.20 | | | | | | | | | | | | | | | | | | | | | | | | |
| | COP | - | 3.44 | | | | | | | | | | | | | | | | | | | | | | | | |
| | Power input(*) | kW | 3.26 | | | | | | | | | | | | | | | | | | | | | | | | |
| Cooling A35/W7 | Capacity | kW | 7.50 | | | | | | - | | | | | | | | | | 7.50 | | | | - | | | | |
| | EER | - | 3.15 | | | | | | - | | | | | | | | | | 3.15 | | | | - | | | | |
| | Power input(*) | kW | 3.28 | | | | | | - | | | | | | | | | | 3.28 | | | | - | | | | |
| Cooling A35/W18 | Capacity | kW | 7.50 | | | | | | - | | | | | | | | | | 7.50 | | | | - | | | | |
| | EER | - | 4.90 | | | | | | - | | | | | | | | | | 4.90 | | | | - | | | | |
| | Power input(*) | kW | 1.53 | | | | | | - | | | | | | | | | | 1.53 | | | | - | | | | |

Note: "Power input" in the above table are values that contains the "pump input (Based on EN 14511)".

Heating A7W35: Heating outside air DB 7°C/WB 6°C, Water outlet temperature 35°C (ΔT=5°C)
A7W45: Heating outside air DB 7°C/WB 6°C, Water outlet temperature 45°C (ΔT=5°C)
A2W35: Heating outside air DB 2°C/WB 1°C, Water outlet temperature 35°C ( ΔT=5°C)
Cooling A35/W7: Cooling outside air DB 35°C, Water outlet temperature 7°C (ΔT=5°C)
A35/W18: Cooling outside air DB 35°C, Water outlet temperature 18°C (ΔT=5°C)

| | | | Cylinder unit | | | | | | | | | | | | | | | | Hydrobox | | | | | | | | |
|---|---|---|---|---|---|---|---|---|---|---|---|---|---|---|---|---|---|---|---|---|---|---|---|---|---|---|---|
| | | | ERPT17X-VM2D | ERPT20X-VM2D | ERPT20X-MD | ERPT20X-VM6D | ERPT30X-VM2ED | ERPT30X-VM6ED | EHPT17X-VM2D | EHPT17X-VM6D | EHPT17X-YM9D | EHPT20X-MED | EHPT20X-VM6D | EHPT20X-YM9D | EHPT20X-YM9ED | EHPT20X-TM9D | EHPT20X-MHEDW | EHPT30X-MED | EHPT30X-YM9ED | ERPX-MD | ERPX-VM2D | ERPX-VM6D | ERPX-YM9D | EHPX-VM2D | EHPX-VM6D | EHPX-YM9D | EHPX-MED | EHPX-YM9ED |
| Outdoor unit | | | PUZ-WM112VAA/YAA(-BS) | | | | | | | | | | | | | | | | | | | | | | | | |
| Heating A7/W35 | Capacity | kW | - | 11.20 | | | | | - | | | 11.20 | | | | | | | | | | | | | | | |
| | COP | - | - | 4.70 | | | | | - | | | 4.70 | | | | | | | | | | | | | | | |
| | Power input(*) | kW | - | 2.38 | | | | | - | | | 2.38 | | | | | | | | | | | | | | | |
| Heating A7/W45 | Capacity | kW | - | 11.20 | | | | | - | | | 11.20 | | | | | | | | | | | | | | | |
| | COP | - | - | 3.70 | | | | | - | | | 3.70 | | | | | | | | | | | | | | | |
| | Power input(*) | kW | - | 3.03 | | | | | - | | | 3.03 | | | | | | | | | | | | | | | |
| Heating A2/W35 | Capacity | kW | - | 11.20 | | | | | - | | | 11.20 | | | | | | | | | | | | | | | |
| | COP | - | - | 3.44 | | | | | - | | | 3.44 | | | | | | | | | | | | | | | |
| | Power input(*) | kW | - | 3.26 | | | | | - | | | 3.26 | | | | | | | | | | | | | | | |
| Cooling A35/W7 | Capacity | kW | - | 10.00 | | | | | - | | | | | | | | | | 10.00 | | | | - | | | | |
| | EER | - | - | 3.25 | | | | | - | | | | | | | | | | 3.25 | | | | - | | | | |
| | Power input(*) | kW | - | 3.08 | | | | | - | | | | | | | | | | 3.08 | | | | - | | | | |
| Cooling A35/W18 | Capacity | kW | - | 10.00 | | | | | - | | | | | | | | | | 10.00 | | | | - | | | | |
| | EER | - | - | 4.80 | | | | | - | | | | | | | | | | 4.80 | | | | - | | | | |
| | Power input(*) | kW | - | 2.08 | | | | | - | | | | | | | | | | 2.08 | | | | - | | | | |
| Outdoor unit | | | PUZ-HWM140VHA/YHA(-BS) | | | | | | | | | | | | | | | | | | | | | | | | |
| Heating A7/W35 | Capacity | kW | - | 14.00 | | | | | - | | | 14.00 | | | | | | | | | | | | | | | |
| | COP | - | - | 4.46 | | | | | - | | | 4.46 | | | | | | | | | | | | | | | |
| | Power input(*) | kW | - | 3.14 | | | | | - | | | 3.14 | | | | | | | | | | | | | | | |
| Heating A7/W45 | Capacity | kW | - | 14.0 | | | | | - | | | 14.0 | | | | | | | | | | | | | | | |
| | COP | - | - | 3.50 | | | | | - | | | 3.50 | | | | | | | | | | | | | | | |
| | Power input(*) | kW | - | 4.00 | | | | | - | | | 4.00 | | | | | | | | | | | | | | | |
| Heating A2/W35 | Capacity | kW | - | 14.00 | | | | | - | | | 14.00 | | | | | | | | | | | | | | | |
| | COP | - | - | 3.15 | | | | | - | | | 3.15 | | | | | | | | | | | | | | | |
| | Power input(*) | kW | - | 4.44 | | | | | - | | | 4.44 | | | | | | | | | | | | | | | |
| Cooling A35/W7 | Capacity | kW | - | 11.90 | | | | | - | | | | | | | | | | 11.90 | | | | - | | | | |
| | EER | - | - | 3.00 | | | | | - | | | | | | | | | | 3.00 | | | | - | | | | |
| | Power input(*) | kW | - | 3.97 | | | | | - | | | | | | | | | | 3.97 | | | | - | | | | |
| Cooling A35/W18 | Capacity | kW | - | 11.10 | | | | | - | | | | | | | | | | 11.10 | | | | - | | | | |
| | EER | - | - | 4.10 | | | | | - | | | | | | | | | | 4.10 | | | | - | | | | |
| | Power input(*) | kW | - | 2.71 | | | | | - | | | | | | | | | | 2.71 | | | | - | | | | |

Note: "Power input" in the above table are values that contains the "pump input (Based on EN 14511)".

Heating A7W35: Heating outside air DB 7°C/WB 6°C, Water outlet temperature 35°C (ΔT=5°C)
A7W45: Heating outside air DB 7°C/WB 6°C, Water outlet temperature 45°C (ΔT=5°C)
A2W35: Heating outside air DB 2°C/WB 1°C, Water outlet temperature 35°C ( ΔT=5°C)
Cooling A35/W7: Cooling outside air DB 35°C, Water outlet temperature 7°C (ΔT=5°C)
A35/W18: Cooling outside air DB 35°C, Water outlet temperature 18°C (ΔT=5°C)

## ■ Split type

| | | | Cylinder unit | | | | | | | | | | | | | | | | | | | | | | | Hydrobox | | | | | | | | | |
|---|---|---|---|---|---|---|---|---|---|---|---|---|---|---|---|---|---|---|---|---|---|---|---|---|---|---|---|---|---|---|---|---|---|---|---|
| | | | ERST17D-VM2D | ERST17D-VM2BD | ERST17D-VM6D | ERST17D-VM6BD | ERST17D-YM9BD | ERST20D-VM2D | ERST20D-VM6D | ERST20D-YM9D | ERST30D-VM2ED | ERST30D-VM6ED | ERST30D-YM9ED | EHST17D-VM2D | EHST17DYM9D | EHST20D-MED | EHST20D-VM2D | EHST20D-VM6D | EHST20D-YM9D | EHST20D-YM9ED | EHST20D-TM9D | EHST30D-MED | EHST30D-VM6ED | EHST30D-YM9ED | EHST30D-TM9ED | ERSD-MED | ERSD-VM2D | ERSD-VM6D | ERSD-YM9D | EHSD-MED | EHSD-VM2D | EHSD-VM6D | EHSD-YM9D | EHSD-YM9ED | EHSD-TM9D |
| Outdoor unit | | | SUZ-SWM40VA | | | | | | | | | | | | | | | | | | | | | | | | | | | | | | | | |
| Heating A7/W35 | Capacity | kW | 4.00 | | | | | | | | | | | | | | | | | | | | | | | | | | | | | | | | |
| | COP | - | 5.20 | | | | | | | | | | | | | | | | | | | | | | | | | | | | | | | | |
| | Power input(*) | kW | 0.77 | | | | | | | | | | | | | | | | | | | | | | | | | | | | | | | | |
| Heating A7/W45 | Capacity | kW | 4.00 | | | | | | | | | | | | | | | | | | | | | | | | | | | | | | | | |
| | COP | - | 3.70 | | | | | | | | | | | | | | | | | | | | | | | | | | | | | | | | |
| | Power input(*) | kW | 1.08 | | | | | | | | | | | | | | | | | | | | | | | | | | | | | | | | |
| Heating A2/W35 | Capacity | kW | 4.00 | | | | | | | | | | | | | | | | | | | | | | | | | | | | | | | | |
| | COP | - | 3.90 | | | | | | | | | | | | | | | | | | | | | | | | | | | | | | | | |
| | Power input(*) | kW | 1.03 | | | | | | | | | | | | | | | | | | | | | | | | | | | | | | | | |
| Cooling A35/W7 | Capacity | kW | 4.50 | | | | | | | | | | | - | | | | | | | | | | | 4.50 | | | | | - | | | | |
| | EER | - | 3.29 | | | | | | | | | | | - | | | | | | | | | | | 3.29 | | | | | - | | | | |
| | Power input(*) | kW | 1.37 | | | | | | | | | | | - | | | | | | | | | | | 1.37 | | | | | - | | | | |
| Cooling A35/W18 | Capacity | kW | 5.60 | | | | | | | | | | | - | | | | | | | | | | | 5.60 | | | | | - | | | | |
| | EER | - | 4.97 | | | | | | | | | | | - | | | | | | | | | | | 4.97 | | | | | - | | | | |
| | Power input(*) | kW | 1.13 | | | | | | | | | | | - | | | | | | | | | | | 1.13 | | | | | - | | | | |
| Outdoor unit | | | SUZ-SWM60VA | | | | | | | | | | | | | | | | | | | | | | | | | | | | | | | | |
| Heating A7/W35 | Capacity | kW | 6.00 | | | | | | | | | | | | | | | | | | | | | | | | | | | | | | | | |
| | COP | - | 4.86 | | | | | | | | | | | | | | | | | | | | | | | | | | | | | | | | |
| | Power input(*) | kW | 1.23 | | | | | | | | | | | | | | | | | | | | | | | | | | | | | | | | |
| Heating A7/W45 | Capacity | kW | 6.00 | | | | | | | | | | | | | | | | | | | | | | | | | | | | | | | | |
| | COP | - | 3.61 | | | | | | | | | | | | | | | | | | | | | | | | | | | | | | | | |
| | Power input(*) | kW | 1.66 | | | | | | | | | | | | | | | | | | | | | | | | | | | | | | | | |
| Heating A2/W35 | Capacity | kW | 5.00 | | | | | | | | | | | | | | | | | | | | | | | | | | | | | | | | |
| | COP | - | 3.33 | | | | | | | | | | | | | | | | | | | | | | | | | | | | | | | | |
| | Power input(*) | kW | 1.50 | | | | | | | | | | | | | | | | | | | | | | | | | | | | | | | | |
| Cooling A35/W7 | Capacity | kW | 5.00 | | | | | | | | | | | - | | | | | | | | | | | 5.00 | | | | | - | | | | |
| | EER | - | 3.02 | | | | | | | | | | | - | | | | | | | | | | | 3.02 | | | | | - | | | | |
| | Power input(*) | kW | 1.66 | | | | | | | | | | | - | | | | | | | | | | | 1.66 | | | | | - | | | | |
| Cooling A35/W18 | Capacity | kW | 6.00 | | | | | | | | | | | - | | | | | | | | | | | 6.00 | | | | | - | | | | |
| | EER | - | 4.88 | | | | | | | | | | | - | | | | | | | | | | | 4.88 | | | | | - | | | | |
| | Power input(*) | kW | 1.23 | | | | | | | | | | | - | | | | | | | | | | | 1.23 | | | | | - | | | | |
| Outdoor unit | | | SUZ-SWM80VA | | | | | | | | | | | | | | | | | | | | | | | | | | | | | | | | |
| Heating A7/W35 | Capacity | kW | 7.50 | | | | | | | | | | | | | | | | | | | | | | | | | | | | | | | | |
| | COP | - | 4.70 | | | | | | | | | | | | | | | | | | | | | | | | | | | | | | | | |
| | Power input(*) | kW | 1.60 | | | | | | | | | | | | | | | | | | | | | | | | | | | | | | | | |
| Heating A7/W45 | Capacity | kW | 7.50 | | | | | | | | | | | | | | | | | | | | | | | | | | | | | | | | |
| | COP | - | 3.60 | | | | | | | | | | | | | | | | | | | | | | | | | | | | | | | | |
| | Power input(*) | kW | 2.08 | | | | | | | | | | | | | | | | | | | | | | | | | | | | | | | | |
| Heating A2/W35 | Capacity | kW | 6.50 | | | | | | | | | | | | | | | | | | | | | | | | | | | | | | | | |
| | COP | - | 3.40 | | | | | | | | | | | | | | | | | | | | | | | | | | | | | | | | |
| | Power input(*) | kW | 1.91 | | | | | | | | | | | | | | | | | | | | | | | | | | | | | | | | |
| Cooling A35/W7 | Capacity | kW | 5.40 | | | | | | | | | | | - | | | | | | | | | | | 5.40 | | | | | - | | | | |
| | EER | - | 3.00 | | | | | | | | | | | - | | | | | | | | | | | 3.00 | | | | | - | | | | |
| | Power input(*) | kW | 1.80 | | | | | | | | | | | - | | | | | | | | | | | 1.80 | | | | | - | | | | |
| Cooling A35/W18 | Capacity | kW | 6.30 | | | | | | | | | | | - | | | | | | | | | | | 6.30 | | | | | - | | | | |
| | EER | - | 4.80 | | | | | | | | | | | - | | | | | | | | | | | 4.80 | | | | | - | | | | |
| | Power input(*) | kW | 1.31 | | | | | | | | | | | - | | | | | | | | | | | 1.31 | | | | | - | | | | |
| Outdoor unit | | | PUHZ-SW75VAA/YAA(-BS) | | | | | | | | | | | | | | | | | | | | | | | | | | | | | | | | |
| Heating A7/W35 | Capacity | kW | 8.00 | | | | | | | | | | | | | | | | | | | | | | | | | | | | | | | | |
| | COP | - | 4.40 | | | | | | | | | | | | | | | | | | | | | | | | | | | | | | | | |
| | Power input(*) | kW | 1.82 | | | | | | | | | | | | | | | | | | | | | | | | | | | | | | | | |
| Heating A7/W45 | Capacity | kW | 8.00 | | | | | | | | | | | | | | | | | | | | | | | | | | | | | | | | |
| | COP | - | 3.40 | | | | | | | | | | | | | | | | | | | | | | | | | | | | | | | | |
| | Power input(*) | kW | 2.35 | | | | | | | | | | | | | | | | | | | | | | | | | | | | | | | | |
| Heating A2/W35 | Capacity | kW | 7.50 | | | | | | | | | | | | | | | | | | | | | | | | | | | | | | | | |
| | COP | - | 3.40 | | | | | | | | | | | | | | | | | | | | | | | | | | | | | | | | |
| | Power input(*) | kW | 2.21 | | | | | | | | | | | | | | | | | | | | | | | | | | | | | | | | |
| Cooling A35/W7 | Capacity | kW | 7.10 | | | | | | | | | | | - | | | | | | | | | | | 7.10 | | | | | - | | | | |
| | EER | - | 2.70 | | | | | | | | | | | - | | | | | | | | | | | 2.70 | | | | | - | | | | |
| | Power input(*) | kW | 2.63 | | | | | | | | | | | - | | | | | | | | | | | 2.63 | | | | | - | | | | |
| Cooling A35/W18 | Capacity | kW | 7.10 | | | | | | | | | | | - | | | | | | | | | | | 7.10 | | | | | - | | | | |
| | EER | - | 4.43 | | | | | | | | | | | - | | | | | | | | | | | 4.43 | | | | | - | | | | |
| | Power input(*) | kW | 1.60 | | | | | | | | | | | - | | | | | | | | | | | 1.60 | | | | | - | | | | |

* The pump input value is not included.
Heating A7W35: Heating outside air DB 7°C/WB 6°C, Water outlet temperature 35°C (ΔT=5°C)
A7W45: Heating outside air DB 7°C/WB 6°C, Water outlet temperature 45°C (ΔT=5°C)
A2W35: Heating outside air DB 2°C/WB 1°C, Water outlet temperature 35°C ( ΔT=5°C)
Cooling A35/W7: Cooling outside air DB 35°C, Water outlet temperature 7°C (ΔT=5°C)
A35/W18: Cooling outside air DB 35°C, Water outlet temperature 18°C (ΔT=5°C)

| | | | Cylinder unit | | | | | | | | | | | | | | | | | | | | | Hydrobox | | | | | | | | | |
|---|---|---|---|---|---|---|---|---|---|---|---|---|---|---|---|---|---|---|---|---|---|---|---|---|---|---|---|---|---|---|---|---|---|
| | | | ERST17D-VM2D | ERST17D-VM2BD | ERST17D-VM6D | ERST17D-VM6BD | ERST17D-YM9BD | ERST20D-VM2D | ERST20D-VM6D | ERST20D-YM9D | ERST30D-VM2ED | ERST30D-VM6ED | ERST30D-YM9ED | EHST17D-VM2D | EHST17DYM9D | EHST20D-MED | EHST20D-VM2D | EHST20D-VM6D | EHST20D-YM9D | EHST20D-YM9ED | EHST20D-TM9D | EHST30D-MED | EHST30D-VM6ED | EHST30D-YM9ED | EHST30D-TM9ED | ERSD-MED | ERSD-VM2D | ERSD-VM6D | ERSD-YM9D | EHSD-MED | EHSD-VM2D | EHSD-VM6D | EHSD-YM9D | EHSD-YM9ED | EHSD-TM9D |
| Outdoor unit | | | SUZ-SWM30VA | | | | | | | | | | | | | | | | | | | | | | | | | | | | | | |
| Heating A7/W35 | Capacity | kW | 3.00 | | | | | | | | | | | | | | | | | | | | | | | | | | | | | | |
| | COP | - | 5.11 | | | | | | | | | | | | | | | | | | | | | | | | | | | | | | |
| | Power input(*) | kW | 0.59 | | | | | | | | | | | | | | | | | | | | | | | | | | | | | | |
| Heating A7/W45 | Capacity | kW | 3.00 | | | | | | | | | | | | | | | | | | | | | | | | | | | | | | |
| | COP | - | 3.67 | | | | | | | | | | | | | | | | | | | | | | | | | | | | | | |
| | Power input(*) | kW | 0.82 | | | | | | | | | | | | | | | | | | | | | | | | | | | | | | |
| Heating A2/W35 | Capacity | kW | 3.00 | | | | | | | | | | | | | | | | | | | | | | | | | | | | | | |
| | COP | - | 3.96 | | | | | | | | | | | | | | | | | | | | | | | | | | | | | | |
| | Power input(*) | kW | 0.76 | | | | | | | | | | | | | | | | | | | | | | | | | | | | | | |
| Cooling A35/W7 | Capacity | kW | 3.50 | | | | | | | | | | | - | | | | | | | | | | 3.50 | | | | - | | | | | |
| | EER | - | 3.52 | | | | | | | | | | | - | | | | | | | | | | 3.52 | | | | - | | | | | |
| | Power input(*) | kW | 0.99 | | | | | | | | | | | - | | | | | | | | | | 0.99 | | | | - | | | | | |
| Cooling A35/W18 | Capacity | kW | 3.50 | | | | | | | | | | | - | | | | | | | | | | 3.50 | | | | - | | | | | |
| | EER | - | 5.51 | | | | | | | | | | | - | | | | | | | | | | 5.51 | | | | - | | | | | |
| | Power input(*) | kW | 0.64 | | | | | | | | | | | - | | | | | | | | | | 0.64 | | | | - | | | | | |
| Outdoor unit | | | SUZ-SHWM30VAH | | | | | | | | | | | | | | | | | | | | | | | | | | | | | | |
| Heating A7/W35 | Capacity | kW | 3.00 | | | | | | | | | | | | | | | | | | | | | | | | | | | | | | |
| | COP | - | 5.11 | | | | | | | | | | | | | | | | | | | | | | | | | | | | | | |
| | Power input(*) | kW | 0.59 | | | | | | | | | | | | | | | | | | | | | | | | | | | | | | |
| Heating A7/W45 | Capacity | kW | 3.00 | | | | | | | | | | | | | | | | | | | | | | | | | | | | | | |
| | COP | - | 3.67 | | | | | | | | | | | | | | | | | | | | | | | | | | | | | | |
| | Power input(*) | kW | 0.82 | | | | | | | | | | | | | | | | | | | | | | | | | | | | | | |
| Heating A2/W35 | Capacity | kW | 3.00 | | | | | | | | | | | | | | | | | | | | | | | | | | | | | | |
| | COP | - | 3.67 | | | | | | | | | | | | | | | | | | | | | | | | | | | | | | |
| | Power input(*) | kW | 0.82 | | | | | | | | | | | | | | | | | | | | | | | | | | | | | | |
| Cooling A35/W7 | Capacity | kW | 3.50 | | | | | | | | | | | - | | | | | | | | | | 3.50 | | | | - | | | | | |
| | EER | - | 3.52 | | | | | | | | | | | - | | | | | | | | | | 3.52 | | | | - | | | | | |
| | Power input(*) | kW | 0.99 | | | | | | | | | | | - | | | | | | | | | | 0.99 | | | | - | | | | | |
| Cooling A35/W18 | Capacity | kW | 3.50 | | | | | | | | | | | - | | | | | | | | | | 3.50 | | | | - | | | | | |
| | EER | - | 5.51 | | | | | | | | | | | - | | | | | | | | | | 5.51 | | | | - | | | | | |
| | Power input(*) | kW | 0.64 | | | | | | | | | | | - | | | | | | | | | | 0.64 | | | | - | | | | | |
| Outdoor unit | | | SUZ-SWM40VA2(-SC) | | | | | | | | | | | | | | | | | | | | | | | | | | | | | | |
| Heating A7/W35 | Capacity | kW | 3.00 | | | | | | | | | | | | | | | | | | | | | | | | | | | | | | |
| | COP | - | 5.11 | | | | | | | | | | | | | | | | | | | | | | | | | | | | | | |
| | Power input(*) | kW | 0.59 | | | | | | | | | | | | | | | | | | | | | | | | | | | | | | |
| Heating A7/W45 | Capacity | kW | 3.00 | | | | | | | | | | | | | | | | | | | | | | | | | | | | | | |
| | COP | - | 3.67 | | | | | | | | | | | | | | | | | | | | | | | | | | | | | | |
| | Power input(*) | kW | 0.82 | | | | | | | | | | | | | | | | | | | | | | | | | | | | | | |
| Heating A2/W35 | Capacity | kW | 4.00 | | | | | | | | | | | | | | | | | | | | | | | | | | | | | | |
| | COP | - | 3.90 | | | | | | | | | | | | | | | | | | | | | | | | | | | | | | |
| | Power input(*) | kW | 1.03 | | | | | | | | | | | | | | | | | | | | | | | | | | | | | | |
| Cooling A35/W7 | Capacity | kW | 4.50 | | | | | | | | | | | - | | | | | | | | | | 4.50 | | | | - | | | | | |
| | EER | - | 3.31 | | | | | | | | | | | - | | | | | | | | | | 3.31 | | | | - | | | | | |
| | Power input(*) | kW | 1.36 | | | | | | | | | | | - | | | | | | | | | | 1.36 | | | | - | | | | | |
| Cooling A35/W18 | Capacity | kW | 5.60 | | | | | | | | | | | - | | | | | | | | | | 5.60 | | | | - | | | | | |
| | EER | - | 4.71 | | | | | | | | | | | - | | | | | | | | | | 4.71 | | | | - | | | | | |
| | Power input(*) | kW | 1.19 | | | | | | | | | | | - | | | | | | | | | | 1.19 | | | | - | | | | | |
| Outdoor unit | | | SUZ-SHWM40VAH(-SC) | | | | | | | | | | | | | | | | | | | | | | | | | | | | | | |
| Heating A7/W35 | Capacity | kW | 3.00 | | | | | | | | | | | | | | | | | | | | | | | | | | | | | | |
| | COP | - | 4.77 | | | | | | | | | | | | | | | | | | | | | | | | | | | | | | |
| | Power input(*) | kW | 0.63 | | | | | | | | | | | | | | | | | | | | | | | | | | | | | | |
| Heating A7/W45 | Capacity | kW | 3.00 | | | | | | | | | | | | | | | | | | | | | | | | | | | | | | |
| | COP | - | 3.08 | | | | | | | | | | | | | | | | | | | | | | | | | | | | | | |
| | Power input(*) | kW | 0.97 | | | | | | | | | | | | | | | | | | | | | | | | | | | | | | |
| Heating A2/W35 | Capacity | kW | 4.00 | | | | | | | | | | | | | | | | | | | | | | | | | | | | | | |
| | COP | - | 3.61 | | | | | | | | | | | | | | | | | | | | | | | | | | | | | | |
| | Power input(*) | kW | 1.11 | | | | | | | | | | | | | | | | | | | | | | | | | | | | | | |
| Cooling A35/W7 | Capacity | kW | 4.50 | | | | | | | | | | | - | | | | | | | | | | 4.50 | | | | - | | | | | |
| | EER | - | 3.33 | | | | | | | | | | | - | | | | | | | | | | 3.33 | | | | - | | | | | |
| | Power input(*) | kW | 1.35 | | | | | | | | | | | - | | | | | | | | | | 1.35 | | | | - | | | | | |
| Cooling A35/W18 | Capacity | kW | 5.60 | | | | | | | | | | | - | | | | | | | | | | 5.60 | | | | - | | | | | |
| | EER | - | 4.70 | | | | | | | | | | | - | | | | | | | | | | 4.70 | | | | - | | | | | |
| | Power input(*) | kW | 1.19 | | | | | | | | | | | - | | | | | | | | | | 1.19 | | | | - | | | | | |

* The pump input value is not included.

Heating A7W35: Heating outside air DB 7°C/WB 6°C, Water outlet temperature 35°C (ΔT=5°C)
A7W45: Heating outside air DB 7°C/WB 6°C, Water outlet temperature 45°C (ΔT=5°C)
A2W35: Heating outside air DB 2°C/WB 1°C, Water outlet temperature 35°C ( ΔT=5°C)

Cooling A35/W7: Cooling outside air DB 35°C, Water outlet temperature 7°C (ΔT=5°C)
A35/W18: Cooling outside air DB 35°C, Water outlet temperature 18°C (ΔT=5°C)

| | | | Cylinder unit | | | | | | | | | | | | | | | | | | | | | | | Hydrobox | | | | | | | | | |
|---|---|---|---|---|---|---|---|---|---|---|---|---|---|---|---|---|---|---|---|---|---|---|---|---|---|---|---|---|---|---|---|---|---|---|---|
| | | | ERST17D-VM2D | ERST17D-VM2BD | ERST17D-VM6D | ERST17D-VM6BD | ERST17D-YM9BD | ERST20D-VM2D | ERST20D-VM6D | ERST20D-YM9D | ERST30D-VM2ED | ERST30D-VM6ED | ERST30D-YM9ED | EHST17D-VM2D | EHST17DYM9D | EHST20D-MED | EHST20D-VM2D | EHST20D-VM6D | EHST20D-YM9D | EHST20D-YM9ED | EHST20D-TM9D | EHST30D-MED | EHST30D-VM6ED | EHST30D-YM9ED | EHST30D-TM9ED | ERSD-MED | ERSD-VM2D | ERSD-VM6D | ERSD-YM9D | EHSD-MED | EHSD-VM2D | EHSD-VM6D | EHSD-YM9D | EHSD-YM9ED | EHSD-TM9D |
| Outdoor unit | | | SUZ-SWM60VA2(-SC) | | | | | | | | | | | | | | | | | | | | | | | | | | | | | | | | |
| Heating A7/W35 | Capacity | kW | 5.00 | | | | | | | | | | | | | | | | | | | | | | | | | | | | | | | | |
| | COP | - | 4.85 | | | | | | | | | | | | | | | | | | | | | | | | | | | | | | | | |
| | Power input(*) | kW | 1.03 | | | | | | | | | | | | | | | | | | | | | | | | | | | | | | | | |
| Heating A7/W45 | Capacity | kW | 5.00 | | | | | | | | | | | | | | | | | | | | | | | | | | | | | | | | |
| | COP | - | 3.23 | | | | | | | | | | | | | | | | | | | | | | | | | | | | | | | | |
| | Power input(*) | kW | 1.55 | | | | | | | | | | | | | | | | | | | | | | | | | | | | | | | | |
| Heating A2/W35 | Capacity | kW | 6.00 | | | | | | | | | | | | | | | | | | | | | | | | | | | | | | | | |
| | COP | - | 3.62 | | | | | | | | | | | | | | | | | | | | | | | | | | | | | | | | |
| | Power input(*) | kW | 1.66 | | | | | | | | | | | | | | | | | | | | | | | | | | | | | | | | |
| Cooling A35/W7 | Capacity | kW | 5.00 | | | | | | | | | | | - | | | | | | | | | | | 5.00 | | | | | - | | | | |
| | EER | - | 3.18 | | | | | | | | | | | - | | | | | | | | | | | 3.18 | | | | | - | | | | |
| | Power input(*) | kW | 1.57 | | | | | | | | | | | - | | | | | | | | | | | 1.57 | | | | | - | | | | |
| Cooling A35/W18 | Capacity | kW | 6.00 | | | | | | | | | | | - | | | | | | | | | | | 6.00 | | | | | - | | | | |
| | EER | - | 4.65 | | | | | | | | | | | - | | | | | | | | | | | 4.65 | | | | | - | | | | |
| | Power input(*) | kW | 1.29 | | | | | | | | | | | - | | | | | | | | | | | 1.29 | | | | | - | | | | |
| Outdoor unit | | | SUZ-SHWM60VAH(SC) | | | | | | | | | | | | | | | | | | | | | | | | | | | | | | | | |
| Heating A7/W35 | Capacity | kW | 5.00 | | | | | | | | | | | | | | | | | | | | | | | | | | | | | | | | |
| | COP | - | 4.95 | | | | | | | | | | | | | | | | | | | | | | | | | | | | | | | | |
| | Power input(*) | kW | 1.01 | | | | | | | | | | | | | | | | | | | | | | | | | | | | | | | | |
| Heating A7/W45 | Capacity | kW | 5.00 | | | | | | | | | | | | | | | | | | | | | | | | | | | | | | | | |
| | COP | - | 3.59 | | | | | | | | | | | | | | | | | | | | | | | | | | | | | | | | |
| | Power input(*) | kW | 1.39 | | | | | | | | | | | | | | | | | | | | | | | | | | | | | | | | |
| Heating A2/W35 | Capacity | kW | 6.00 | | | | | | | | | | | | | | | | | | | | | | | | | | | | | | | | |
| | COP | - | 3.47 | | | | | | | | | | | | | | | | | | | | | | | | | | | | | | | | |
| | Power input(*) | kW | 1.73 | | | | | | | | | | | | | | | | | | | | | | | | | | | | | | | | |
| Cooling A35/W7 | Capacity | kW | 6.00 | | | | | | | | | | | - | | | | | | | | | | | 6.00 | | | | | - | | | | |
| | EER | - | 3.28 | | | | | | | | | | | - | | | | | | | | | | | 3.28 | | | | | - | | | | |
| | Power input(*) | kW | 1.83 | | | | | | | | | | | - | | | | | | | | | | | 1.83 | | | | | - | | | | |
| Cooling A35/W18 | Capacity | kW | 6.00 | | | | | | | | | | | - | | | | | | | | | | | 6.00 | | | | | - | | | | |
| | EER | - | 5.21 | | | | | | | | | | | - | | | | | | | | | | | 5.21 | | | | | - | | | | |
| | Power input(*) | kW | 1.15 | | | | | | | | | | | - | | | | | | | | | | | 1.15 | | | | | - | | | | |
| Outdoor unit | | | SUZ-SWM80VA2 | | | | | | | | | | | | | | | | | | | | | | | | | | | | | | | | |
| Heating A7/W35 | Capacity | kW | 6.00 | | | | | | | | | | | | | | | | | | | | | | | | | | | | | | | | |
| | COP | - | 5.10 | | | | | | | | | | | | | | | | | | | | | | | | | | | | | | | | |
| | Power input(*) | kW | 1.18 | | | | | | | | | | | | | | | | | | | | | | | | | | | | | | | | |
| Heating A7/W45 | Capacity | kW | 6.00 | | | | | | | | | | | | | | | | | | | | | | | | | | | | | | | | |
| | COP | - | 3.57 | | | | | | | | | | | | | | | | | | | | | | | | | | | | | | | | |
| | Power input(*) | kW | 1.68 | | | | | | | | | | | | | | | | | | | | | | | | | | | | | | | | |
| Heating A2/W35 | Capacity | kW | 7.50 | | | | | | | | | | | | | | | | | | | | | | | | | | | | | | | | |
| | COP | - | 3.50 | | | | | | | | | | | | | | | | | | | | | | | | | | | | | | | | |
| | Power input(*) | kW | 2.14 | | | | | | | | | | | | | | | | | | | | | | | | | | | | | | | | |
| Cooling A35/W7 | Capacity | kW | 6.70 | | | | | | | | | | | - | | | | | | | | | | | 6.70 | | | | | - | | | | |
| | EER | - | 3.20 | | | | | | | | | | | - | | | | | | | | | | | 3.20 | | | | | - | | | | |
| | Power input(*) | kW | 2.09 | | | | | | | | | | | - | | | | | | | | | | | 2.09 | | | | | - | | | | |
| Cooling A35/W18 | Capacity | kW | 6.70 | | | | | | | | | | | - | | | | | | | | | | | 6.70 | | | | | - | | | | |
| | EER | - | 5.06 | | | | | | | | | | | - | | | | | | | | | | | 5.06 | | | | | - | | | | |
| | Power input(*) | kW | 1.32 | | | | | | | | | | | - | | | | | | | | | | | 1.32 | | | | | - | | | | |
| Outdoor unit | | | SUZ-SWM80VAH2 | | | | | | | | | | | | | | | | | | | | | | | | | | | | | | | | |
| Heating A7/W35 | Capacity | kW | 6.00 | | | | | | | | | | | | | | | | | | | | | | | | | | | | | | | | |
| | COP | - | 5.10 | | | | | | | | | | | | | | | | | | | | | | | | | | | | | | | | |
| | Power input(*) | kW | 1.18 | | | | | | | | | | | | | | | | | | | | | | | | | | | | | | | | |
| Heating A7/W45 | Capacity | kW | 6.00 | | | | | | | | | | | | | | | | | | | | | | | | | | | | | | | | |
| | COP | - | 3.57 | | | | | | | | | | | | | | | | | | | | | | | | | | | | | | | | |
| | Power input(*) | kW | 1.68 | | | | | | | | | | | | | | | | | | | | | | | | | | | | | | | | |
| Heating A2/W35 | Capacity | kW | 7.50 | | | | | | | | | | | | | | | | | | | | | | | | | | | | | | | | |
| | COP | - | 3.31 | | | | | | | | | | | | | | | | | | | | | | | | | | | | | | | | |
| | Power input(*) | kW | 2.27 | | | | | | | | | | | | | | | | | | | | | | | | | | | | | | | | |
| Cooling A35/W7 | Capacity | kW | 6.70 | | | | | | | | | | | - | | | | | | | | | | | 6.70 | | | | | - | | | | |
| | EER | - | 3.20 | | | | | | | | | | | - | | | | | | | | | | | 3.20 | | | | | - | | | | |
| | Power input(*) | kW | 2.09 | | | | | | | | | | | - | | | | | | | | | | | 2.09 | | | | | - | | | | |
| Cooling A35/W18 | Capacity | kW | 6.70 | | | | | | | | | | | - | | | | | | | | | | | 6.70 | | | | | - | | | | |
| | EER | - | 5.06 | | | | | | | | | | | - | | | | | | | | | | | 5.06 | | | | | - | | | | |
| | Power input(*) | kW | 1.32 | | | | | | | | | | | - | | | | | | | | | | | 1.32 | | | | | - | | | | |

* The pump input value is not included.
Heating A7W35: Heating outside air DB 7°C/WB 6°C, Water outlet temperature 35°C (ΔT=5°C)
A7W45: Heating outside air DB 7°C/WB 6°C, Water outlet temperature 45°C (ΔT=5°C)
A2W35: Heating outside air DB 2°C/WB 1°C, Water outlet temperature 35°C ( ΔT=5°C)
Cooling A35/W7: Cooling outside air DB 35°C, Water outlet temperature 7°C (ΔT=5°C)
A35/W18: Cooling outside air DB 35°C, Water outlet temperature 18°C (ΔT=5°C)

| | | | Cylinder unit | | | | | | | | | | | | | | | | | | | | | | | Hydrobox | | | | | | | | | |
|---|---|---|---|---|---|---|---|---|---|---|---|---|---|---|---|---|---|---|---|---|---|---|---|---|---|---|---|---|---|---|---|---|---|---|---|
| | | | ERST17D-VM2D | ERST17D-VM2BD | ERST17D-VM6D | ERST17D-VM6BD | ERST17D-YM9BD | ERST20D-VM2D | ERST20D-VM6D | ERST20D-YM9D | ERST30D-VM2ED | ERST30D-VM6ED | ERST30D-YM9ED | EHST17D-VM2D | EHST17DYM9D | EHST20D-MED | EHST20D-VM2D | EHST20D-VM6D | EHST20D-YM9D | EHST20D-YM9ED | EHST20D-TM9D | EHST30D-MED | EHST30D-VM6ED | EHST30D-YM9ED | EHST30D-TM9ED | ERSD-MED | ERSD-VM2D | ERSD-VM6D | ERSD-YM9D | EHSD-MED | EHSD-VM2D | EHSD-VM6D | EHSD-YM9D | EHSD-YM9ED | EHSD-TM9D |
| Outdoor unit | | | SUZ-SWM100VA | | | | | | | | | | | | | | | | | | | | | | | | | | | | | | | | |
| Heating A7/W35 | Capacity | kW | 7.50 | | | | | | | | | | | | | | | | | | | | | | | | | | | | | | | | |
| | COP | - | 4.85 | | | | | | | | | | | | | | | | | | | | | | | | | | | | | | | | |
| | Power input(*) | kW | 1.55 | | | | | | | | | | | | | | | | | | | | | | | | | | | | | | | | |
| Heating A7/W45 | Capacity | kW | 7.50 | | | | | | | | | | | | | | | | | | | | | | | | | | | | | | | | |
| | COP | - | 3.44 | | | | | | | | | | | | | | | | | | | | | | | | | | | | | | | | |
| | Power input(*) | kW | 2.18 | | | | | | | | | | | | | | | | | | | | | | | | | | | | | | | | |
| Heating A2/W35 | Capacity | kW | 9.00 | | | | | | | | | | | | | | | | | | | | | | | | | | | | | | | | |
| | COP | - | 3.12 | | | | | | | | | | | | | | | | | | | | | | | | | | | | | | | | |
| | Power input(*) | kW | 2.88 | | | | | | | | | | | | | | | | | | | | | | | | | | | | | | | | |
| Cooling A35/W7 | Capacity | kW | 7.30 | | | | | | | | | | | - | | | | | | | | | | | 7.30 | | | | - | | | | | | |
| | EER | - | 3.00 | | | | | | | | | | | - | | | | | | | | | | | 3.00 | | | | - | | | | | | |
| | Power input(*) | kW | 2.43 | | | | | | | | | | | - | | | | | | | | | | | 2.43 | | | | - | | | | | | |
| Cooling A35/W18 | Capacity | kW | 8.10 | | | | | | | | | | | - | | | | | | | | | | | 8.10 | | | | - | | | | | | |
| | EER | - | 4.44 | | | | | | | | | | | - | | | | | | | | | | | 4.44 | | | | - | | | | | | |
| | Power input(*) | kW | 1.82 | | | | | | | | | | | - | | | | | | | | | | | 1.82 | | | | - | | | | | | |
| Outdoor unit | | | SUZ-SWM100VAH | | | | | | | | | | | | | | | | | | | | | | | | | | | | | | | | |
| Heating A7/W35 | Capacity | kW | 7.50 | | | | | | | | | | | | | | | | | | | | | | | | | | | | | | | | |
| | COP | - | 4.85 | | | | | | | | | | | | | | | | | | | | | | | | | | | | | | | | |
| | Power input(*) | kW | 1.55 | | | | | | | | | | | | | | | | | | | | | | | | | | | | | | | | |
| Heating A7/W45 | Capacity | kW | 7.50 | | | | | | | | | | | | | | | | | | | | | | | | | | | | | | | | |
| | COP | - | 3.44 | | | | | | | | | | | | | | | | | | | | | | | | | | | | | | | | |
| | Power input(*) | kW | 2.18 | | | | | | | | | | | | | | | | | | | | | | | | | | | | | | | | |
| Heating A2/W35 | Capacity | kW | 9.00 | | | | | | | | | | | | | | | | | | | | | | | | | | | | | | | | |
| | COP | - | 3.00 | | | | | | | | | | | | | | | | | | | | | | | | | | | | | | | | |
| | Power input(*) | kW | 3.00 | | | | | | | | | | | | | | | | | | | | | | | | | | | | | | | | |
| Cooling A35/W7 | Capacity | kW | 7.30 | | | | | | | | | | | - | | | | | | | | | | | 7.30 | | | | - | | | | | | |
| | EER | - | 3.00 | | | | | | | | | | | - | | | | | | | | | | | 3.00 | | | | - | | | | | | |
| | Power input(*) | kW | 2.43 | | | | | | | | | | | - | | | | | | | | | | | 2.43 | | | | - | | | | | | |
| Cooling A35/W18 | Capacity | kW | 8.10 | | | | | | | | | | | - | | | | | | | | | | | 8.10 | | | | - | | | | | | |
| | EER | - | 4.44 | | | | | | | | | | | - | | | | | | | | | | | 4.44 | | | | - | | | | | | |
| | Power input(*) | kW | 1.82 | | | | | | | | | | | - | | | | | | | | | | | 1.82 | | | | - | | | | | | |
| Outdoor unit | | | PUZ-SWM60VAA | | | | | | | | | | | | | | | | | | | | | | | | | | | | | | | | |
| Heating A7/W35 | Capacity | kW | 5.00 | | | | | | | | | | | | | | | | | | | | | | | | | | | | | | | | |
| | COP | - | 5.00 | | | | | | | | | | | | | | | | | | | | | | | | | | | | | | | | |
| | Power input(*) | kW | 1.00 | | | | | | | | | | | | | | | | | | | | | | | | | | | | | | | | |
| Heating A7/W45 | Capacity | kW | 5.00 | | | | | | | | | | | | | | | | | | | | | | | | | | | | | | | | |
| | COP | - | 3.64 | | | | | | | | | | | | | | | | | | | | | | | | | | | | | | | | |
| | Power input(*) | kW | 1.37 | | | | | | | | | | | | | | | | | | | | | | | | | | | | | | | | |
| Heating A2/W35 | Capacity | kW | 6.00 | | | | | | | | | | | | | | | | | | | | | | | | | | | | | | | | |
| | COP | - | 3.70 | | | | | | | | | | | | | | | | | | | | | | | | | | | | | | | | |
| | Power input(*) | kW | 1.62 | | | | | | | | | | | | | | | | | | | | | | | | | | | | | | | | |
| Cooling A35/W7 | Capacity | kW | 5.10 | | | | | | | | | | | - | | | | | | | | | | | 5.10 | | | | - | | | | | | |
| | EER | - | 3.40 | | | | | | | | | | | - | | | | | | | | | | | 3.40 | | | | - | | | | | | |
| | Power input(*) | kW | 1.50 | | | | | | | | | | | - | | | | | | | | | | | 1.50 | | | | - | | | | | | |
| Cooling A35/W18 | Capacity | kW | 6.00 | | | | | | | | | | | - | | | | | | | | | | | 6.00 | | | | - | | | | | | |
| | EER | - | 5.25 | | | | | | | | | | | - | | | | | | | | | | | 5.25 | | | | - | | | | | | |
| | Power input(*) | kW | 1.14 | | | | | | | | | | | - | | | | | | | | | | | 1.14 | | | | - | | | | | | |
| Outdoor unit | | | PUZ-SWM80VAA/YAA | | | | | | | | | | | | | | | | | | | | | | | | | | | | | | | | |
| Heating A7/W35 | Capacity | kW | 6.00 | | | | | | | | | | | | | | | | | | | | | | | | | | | | | | | | |
| | COP | - | 5.00 | | | | | | | | | | | | | | | | | | | | | | | | | | | | | | | | |
| | Power input(*) | kW | 1.20 | | | | | | | | | | | | | | | | | | | | | | | | | | | | | | | | |
| Heating A7/W45 | Capacity | kW | 6.00 | | | | | | | | | | | | | | | | | | | | | | | | | | | | | | | | |
| | COP | - | 3.69 | | | | | | | | | | | | | | | | | | | | | | | | | | | | | | | | |
| | Power input(*) | kW | 1.63 | | | | | | | | | | | | | | | | | | | | | | | | | | | | | | | | |
| Heating A2/W35 | Capacity | kW | 8.00 | | | | | | | | | | | | | | | | | | | | | | | | | | | | | | | | |
| | COP | - | 3.65 | | | | | | | | | | | | | | | | | | | | | | | | | | | | | | | | |
| | Power input(*) | kW | 2.19 | | | | | | | | | | | | | | | | | | | | | | | | | | | | | | | | |
| Cooling A35/W7 | Capacity | kW | 7.10 | | | | | | | | | | | - | | | | | | | | | | | 7.10 | | | | - | | | | | | |
| | EER | - | 3.20 | | | | | | | | | | | - | | | | | | | | | | | 3.20 | | | | - | | | | | | |
| | Power input(*) | kW | 2.22 | | | | | | | | | | | - | | | | | | | | | | | 2.22 | | | | - | | | | | | |
| Cooling A35/W18 | Capacity | kW | 8.00 | | | | | | | | | | | - | | | | | | | | | | | 8.00 | | | | - | | | | | | |
| | EER | - | 4.90 | | | | | | | | | | | - | | | | | | | | | | | 4.90 | | | | - | | | | | | |
| | Power input(*) | kW | 1.63 | | | | | | | | | | | - | | | | | | | | | | | 1.63 | | | | - | | | | | | |

* The pump input value is not included.
Heating A7W35: Heating outside air DB 7°C/WB 6°C, Water outlet temperature 35°C (ΔT=5°C)
A7W45: Heating outside air DB 7°C/WB 6°C, Water outlet temperature 45°C (ΔT=5°C)
A2W35: Heating outside air DB 2°C/WB 1°C, Water outlet temperature 35°C ( ΔT=5°C)
Cooling A35/W7: Cooling outside air DB 35°C, Water outlet temperature 7°C (ΔT=5°C)
A35/W18: Cooling outside air DB 35°C, Water outlet temperature 18°C (ΔT=5°C)

| | | | Cylinder unit | | | | | | | | | | | | | | | | | | | | | | | Hydrobox | | | | | | | | | |
|---|---|---|---|---|---|---|---|---|---|---|---|---|---|---|---|---|---|---|---|---|---|---|---|---|---|---|---|---|---|---|---|---|---|---|---|
| | | | ERST17D-VM2D | ERST17D-VM2BD | ERST17D-VM6D | ERST17D-VM6BD | ERST17D-YM9BD | ERST20D-VM2D | ERST20D-VM6D | ERST20D-YM9D | ERST30D-VM2ED | ERST30D-VM6ED | ERST30D-YM9ED | EHST17D-VM2D | EHST17DYM9D | EHST20D-MED | EHST20D-VM2D | EHST20D-VM6D | EHST20D-YM9D | EHST20D-YM9ED | EHST20D-TM9D | EHST30D-MED | EHST30D-VM6ED | EHST30D-YM9ED | EHST30D-TM9ED | ERSD-MED | ERSD-VM2D | ERSD-VM6D | ERSD-YM9D | EHSD-MED | EHSD-VM2D | EHSD-VM6D | EHSD-YM9D | EHSD-YM9ED | EHSD-TM9D |
| Outdoor unit | | | PUZ-SWM100VAA/YAA | | | | | | | | | | | | | | | | | | | | | | | | | | | | | | | | |
| Heating A7/W35 | Capacity | kW | 8.00 | | | | | | | | | | | | | | | | | | | | | | | | | | | | | | | | |
| | COP | - | 5.00 | | | | | | | | | | | | | | | | | | | | | | | | | | | | | | | | |
| | Power input(*) | kW | 1.62 | | | | | | | | | | | | | | | | | | | | | | | | | | | | | | | | |
| Heating A7/W45 | Capacity | kW | 8.00 | | | | | | | | | | | | | | | | | | | | | | | | | | | | | | | | |
| | COP | - | 3.64 | | | | | | | | | | | | | | | | | | | | | | | | | | | | | | | | |
| | Power input(*) | kW | 2.20 | | | | | | | | | | | | | | | | | | | | | | | | | | | | | | | | |
| Heating A2/W35 | Capacity | kW | 10.00 | | | | | | | | | | | | | | | | | | | | | | | | | | | | | | | | |
| | COP | - | 3.45 | | | | | | | | | | | | | | | | | | | | | | | | | | | | | | | | |
| | Power input(*) | kW | 2.90 | | | | | | | | | | | | | | | | | | | | | | | | | | | | | | | | |
| Cooling A35/W7 | Capacity | kW | 9.00 | | | | | | | | | | | - | | | | | | | | | | | 9.00 | | | | | - | | | | | |
| | EER | - | 2.95 | | | | | | | | | | | - | | | | | | | | | | | 2.95 | | | | | - | | | | | |
| | Power input(*) | kW | 3.05 | | | | | | | | | | | - | | | | | | | | | | | 3.05 | | | | | - | | | | | |
| Cooling A35/W18 | Capacity | kW | 10.00 | | | | | | | | | | | - | | | | | | | | | | | 10.00 | | | | | - | | | | | |
| | EER | - | 4.55 | | | | | | | | | | | - | | | | | | | | | | | 4.55 | | | | | - | | | | | |
| | Power input(*) | kW | 2.20 | | | | | | | | | | | - | | | | | | | | | | | 2.20 | | | | | - | | | | | |
| Outdoor unit | | | PUZ-SWM120VAA/YAA | | | | | | | | | | | | | | | | | | | | | | | | | | | | | | | | |
| Heating A7/W35 | Capacity | kW | 10.00 | | | | | | | | | | | | | | | | | | | | | | | | | | | | | | | | |
| | COP | - | 4.85 | | | | | | | | | | | | | | | | | | | | | | | | | | | | | | | | |
| | Power input(*) | kW | 2.06 | | | | | | | | | | | | | | | | | | | | | | | | | | | | | | | | |
| Heating A7/W45 | Capacity | kW | 10.00 | | | | | | | | | | | | | | | | | | | | | | | | | | | | | | | | |
| | COP | - | 3.43 | | | | | | | | | | | | | | | | | | | | | | | | | | | | | | | | |
| | Power input(*) | kW | 2.92 | | | | | | | | | | | | | | | | | | | | | | | | | | | | | | | | |
| Heating A2/W35 | Capacity | kW | 12.10 | | | | | | | | | | | | | | | | | | | | | | | | | | | | | | | | |
| | COP | - | 3.25 | | | | | | | | | | | | | | | | | | | | | | | | | | | | | | | | |
| | Power input(*) | kW | 3.72 | | | | | | | | | | | | | | | | | | | | | | | | | | | | | | | | |
| Cooling A35/W7 | Capacity | kW | 11.00 | | | | | | | | | | | - | | | | | | | | | | | 11.00 | | | | | - | | | | | |
| | EER | - | 2.85 | | | | | | | | | | | - | | | | | | | | | | | 2.85 | | | | | - | | | | | |
| | Power input(*) | kW | 3.86 | | | | | | | | | | | - | | | | | | | | | | | 3.86 | | | | | - | | | | | |
| Cooling A35/W18 | Capacity | kW | 12.00 | | | | | | | | | | | - | | | | | | | | | | | 12.00 | | | | | - | | | | | |
| | EER | - | 4.30 | | | | | | | | | | | - | | | | | | | | | | | 4.30 | | | | | - | | | | | |
| | Power input(*) | kW | 2.79 | | | | | | | | | | | - | | | | | | | | | | | 2.79 | | | | | - | | | | | |
| Outdoor unit | | | PUZ-SWM140VAA/YAA | | | | | | | | | | | | | | | | | | | | | | | | | | | | | | | | |
| Heating A7/W35 | Capacity | kW | 12.00 | | | | | | | | | | | | | | | | | | | | | | | | | | | | | | | | |
| | COP | - | 4.75 | | | | | | | | | | | | | | | | | | | | | | | | | | | | | | | | |
| | Power input(*) | kW | 2.53 | | | | | | | | | | | | | | | | | | | | | | | | | | | | | | | | |
| Heating A7/W45 | Capacity | kW | 12.00 | | | | | | | | | | | | | | | | | | | | | | | | | | | | | | | | |
| | COP | - | 3.23 | | | | | | | | | | | | | | | | | | | | | | | | | | | | | | | | |
| | Power input(*) | kW | 3.72 | | | | | | | | | | | | | | | | | | | | | | | | | | | | | | | | |
| Heating A2/W35 | Capacity | kW | 14.00 | | | | | | | | | | | | | | | | | | | | | | | | | | | | | | | | |
| | COP | - | 3.15 | | | | | | | | | | | | | | | | | | | | | | | | | | | | | | | | |
| | Power input(*) | kW | 4.44 | | | | | | | | | | | | | | | | | | | | | | | | | | | | | | | | |
| Cooling A35/W7 | Capacity | kW | 12.50 | | | | | | | | | | | - | | | | | | | | | | | 12.50 | | | | | - | | | | | |
| | EER | - | 2.60 | | | | | | | | | | | - | | | | | | | | | | | 2.60 | | | | | - | | | | | |
| | Power input(*) | kW | 4.81 | | | | | | | | | | | - | | | | | | | | | | | 4.81 | | | | | - | | | | | |
| Cooling A35/W18 | Capacity | kW | 14.00 | | | | | | | | | | | - | | | | | | | | | | | 14.00 | | | | | - | | | | | |
| | EER | - | 3.62 | | | | | | | | | | | - | | | | | | | | | | | 3.62 | | | | | - | | | | | |
| | Power input(*) | kW | 3.87 | | | | | | | | | | | - | | | | | | | | | | | 3.87 | | | | | - | | | | | |
| Outdoor unit | | | PUZ-SHWM60VAA | | | | | | | | | | | | | | | | | | | | | | | | | | | | | | | | |
| Heating A7/W35 | Capacity | kW | 5.00 | | | | | | | | | | | | | | | | | | | | | | | | | | | | | | | | |
| | COP | - | 5.05 | | | | | | | | | | | | | | | | | | | | | | | | | | | | | | | | |
| | Power input(*) | kW | 0.99 | | | | | | | | | | | | | | | | | | | | | | | | | | | | | | | | |
| Heating A7/W45 | Capacity | kW | 5.00 | | | | | | | | | | | | | | | | | | | | | | | | | | | | | | | | |
| | COP | - | 3.64 | | | | | | | | | | | | | | | | | | | | | | | | | | | | | | | | |
| | Power input(*) | kW | 1.37 | | | | | | | | | | | | | | | | | | | | | | | | | | | | | | | | |
| Heating A2/W35 | Capacity | kW | 6.00 | | | | | | | | | | | | | | | | | | | | | | | | | | | | | | | | |
| | COP | - | 3.80 | | | | | | | | | | | | | | | | | | | | | | | | | | | | | | | | |
| | Power input(*) | kW | 1.58 | | | | | | | | | | | | | | | | | | | | | | | | | | | | | | | | |
| Cooling A35/W7 | Capacity | kW | 5.10 | | | | | | | | | | | - | | | | | | | | | | | 5.10 | | | | | - | | | | | |
| | EER | - | 3.40 | | | | | | | | | | | - | | | | | | | | | | | 3.40 | | | | | - | | | | | |
| | Power input(*) | kW | 1.50 | | | | | | | | | | | - | | | | | | | | | | | 1.50 | | | | | - | | | | | |
| Cooling A35/W18 | Capacity | kW | 6.00 | | | | | | | | | | | - | | | | | | | | | | | 6.00 | | | | | - | | | | | |
| | EER | - | 5.25 | | | | | | | | | | | - | | | | | | | | | | | 5.25 | | | | | - | | | | | |
| | Power input(*) | kW | 1.14 | | | | | | | | | | | - | | | | | | | | | | | 1.14 | | | | | - | | | | | |

* The pump input value is not included.
Heating A7W35: Heating outside air DB 7°C/WB 6°C, Water outlet temperature 35°C (ΔT=5°C)
A7W45: Heating outside air DB 7°C/WB 6°C, Water outlet temperature 45°C (ΔT=5°C)
A2W35: Heating outside air DB 2°C/WB 1°C, Water outlet temperature 35°C ( ΔT=5°C)
Cooling A35/W7: Cooling outside air DB 35°C, Water outlet temperature 7°C (ΔT=5°C)
A35/W18: Cooling outside air DB 35°C, Water outlet temperature 18°C (ΔT=5°C)

| | | | Cylinder unit | | | | | | | | | | | | | | | | Hydrobox | | | | | | | | | | | | | | |
|---|---|---|---|---|---|---|---|---|---|---|---|---|---|---|---|---|---|---|---|---|---|---|---|---|---|---|---|---|---|---|---|---|---|
| | | | ERST17D-VM2D | ERST17D-VM2BD | ERST17D-VM6D | ERST17D-VM6BD | ERST17D-YM9BD | ERST20D-VM2D | ERST20D-VM6D | ERST20D-YM9D | ERST30D-VM2ED | ERST30D-VM6ED | ERST30D-YM9ED | EHST17D-VM2D | EHST17DYM9D | EHST20D-MED | EHST20D-VM2D | EHST20D-VM6D | EHST20D-YM9D | EHST20D-YM9ED | EHST20D-TM9D | EHST30D-MED | EHST30D-VM6ED | EHST30D-YM9ED | EHST30D-TM9ED | ERSD-MED | ERSD-VM2D | ERSD-VM6D | ERSD-YM9D | EHSD-MED | EHSD-VM2D | EHSD-VM6D | EHSD-YM9D | EHSD-YM9ED | EHSD-TM9D |
| Outdoor unit | | | PUZ-SHWM80VAA/YAA | | | | | | | | | | | | | | | | | | | | | | | | | | | | | | |
| Heating A7/W35 | Capacity | kW | 6.00 | | | | | | | | | | | | | | | | | | | | | | | | | | | | | | |
| | COP | - | 5.05 | | | | | | | | | | | | | | | | | | | | | | | | | | | | | | |
| | Power input(*) | kW | 1.19 | | | | | | | | | | | | | | | | | | | | | | | | | | | | | | |
| Heating A7/W45 | Capacity | kW | 6.00 | | | | | | | | | | | | | | | | | | | | | | | | | | | | | | |
| | COP | - | 3.69 | | | | | | | | | | | | | | | | | | | | | | | | | | | | | | |
| | Power input(*) | kW | 1.63 | | | | | | | | | | | | | | | | | | | | | | | | | | | | | | |
| Heating A2/W35 | Capacity | kW | 8.00 | | | | | | | | | | | | | | | | | | | | | | | | | | | | | | |
| | COP | - | 3.75 | | | | | | | | | | | | | | | | | | | | | | | | | | | | | | |
| | Power input(*) | kW | 2.13 | | | | | | | | | | | | | | | | | | | | | | | | | | | | | | |
| Cooling A35/W7 | Capacity | kW | 7.10 | | | | | | | | | | | - | | | | | | | | | | | 7.10 | | | | | - | | | | |
| | EER | - | 3.20 | | | | | | | | | | | - | | | | | | | | | | | 3.20 | | | | | - | | | | |
| | Power input(*) | kW | 2.22 | | | | | | | | | | | - | | | | | | | | | | | 2.22 | | | | | - | | | | |
| Cooling A35/W18 | Capacity | kW | 8.00 | | | | | | | | | | | - | | | | | | | | | | | 8.00 | | | | | - | | | | |
| | EER | - | 4.90 | | | | | | | | | | | - | | | | | | | | | | | 4.90 | | | | | - | | | | |
| | Power input(*) | kW | 1.63 | | | | | | | | | | | - | | | | | | | | | | | 1.63 | | | | | - | | | | |
| Outdoor unit | | | PUZ-SHWM100VAA/YAA | | | | | | | | | | | | | | | | | | | | | | | | | | | | | | |
| Heating A7/W35 | Capacity | kW | 8.00 | | | | | | | | | | | | | | | | | | | | | | | | | | | | | | |
| | COP | - | 5.00 | | | | | | | | | | | | | | | | | | | | | | | | | | | | | | |
| | Power input(*) | kW | 1.60 | | | | | | | | | | | | | | | | | | | | | | | | | | | | | | |
| Heating A7/W45 | Capacity | kW | 8.00 | | | | | | | | | | | | | | | | | | | | | | | | | | | | | | |
| | COP | - | 3.69 | | | | | | | | | | | | | | | | | | | | | | | | | | | | | | |
| | Power input(*) | kW | 2.17 | | | | | | | | | | | | | | | | | | | | | | | | | | | | | | |
| Heating A2/W35 | Capacity | kW | 10.00 | | | | | | | | | | | | | | | | | | | | | | | | | | | | | | |
| | COP | - | 3.50 | | | | | | | | | | | | | | | | | | | | | | | | | | | | | | |
| | Power input(*) | kW | 2.86 | | | | | | | | | | | | | | | | | | | | | | | | | | | | | | |
| Cooling A35/W7 | Capacity | kW | 9.00 | | | | | | | | | | | - | | | | | | | | | | | 9.00 | | | | | - | | | | |
| | EER | - | 2.95 | | | | | | | | | | | - | | | | | | | | | | | 2.95 | | | | | - | | | | |
| | Power input(*) | kW | 3.05 | | | | | | | | | | | - | | | | | | | | | | | 3.05 | | | | | - | | | | |
| Cooling A35/W18 | Capacity | kW | 10.00 | | | | | | | | | | | - | | | | | | | | | | | 10.00 | | | | | - | | | | |
| | EER | - | 4.55 | | | | | | | | | | | - | | | | | | | | | | | 4.55 | | | | | - | | | | |
| | Power input(*) | kW | 2.20 | | | | | | | | | | | - | | | | | | | | | | | 2.20 | | | | | - | | | | |
| Outdoor unit | | | PUZ-SHWM120VAA/YAA | | | | | | | | | | | | | | | | | | | | | | | | | | | | | | |
| Heating A7/W35 | Capacity | kW | 10.00 | | | | | | | | | | | | | | | | | | | | | | | | | | | | | | |
| | COP | - | 4.85 | | | | | | | | | | | | | | | | | | | | | | | | | | | | | | |
| | Power input(*) | kW | 2.06 | | | | | | | | | | | | | | | | | | | | | | | | | | | | | | |
| Heating A7/W45 | Capacity | kW | 10.00 | | | | | | | | | | | | | | | | | | | | | | | | | | | | | | |
| | COP | - | 3.43 | | | | | | | | | | | | | | | | | | | | | | | | | | | | | | |
| | Power input(*) | kW | 2.92 | | | | | | | | | | | | | | | | | | | | | | | | | | | | | | |
| Heating A2/W35 | Capacity | kW | 12.10 | | | | | | | | | | | | | | | | | | | | | | | | | | | | | | |
| | COP | - | 3.30 | | | | | | | | | | | | | | | | | | | | | | | | | | | | | | |
| | Power input(*) | kW | 3.67 | | | | | | | | | | | | | | | | | | | | | | | | | | | | | | |
| Cooling A35/W7 | Capacity | kW | 11.00 | | | | | | | | | | | - | | | | | | | | | | | 11.00 | | | | | - | | | | |
| | EER | - | 2.85 | | | | | | | | | | | - | | | | | | | | | | | 2.85 | | | | | - | | | | |
| | Power input(*) | kW | 3.86 | | | | | | | | | | | - | | | | | | | | | | | 3.86 | | | | | - | | | | |
| Cooling A35/W18 | Capacity | kW | 12.00 | | | | | | | | | | | - | | | | | | | | | | | 12.00 | | | | | - | | | | |
| | EER | - | 4.30 | | | | | | | | | | | - | | | | | | | | | | | 4.30 | | | | | - | | | | |
| | Power input(*) | kW | 2.79 | | | | | | | | | | | - | | | | | | | | | | | 2.79 | | | | | - | | | | |
| Outdoor unit | | | PUZ-SHWM140VAA/YAA | | | | | | | | | | | | | | | | | | | | | | | | | | | | | | |
| Heating A7/W35 | Capacity | kW | 12.00 | | | | | | | | | | | | | | | | | | | | | | | | | | | | | | |
| | COP | - | 4.80 | | | | | | | | | | | | | | | | | | | | | | | | | | | | | | |
| | Power input(*) | kW | 2.50 | | | | | | | | | | | | | | | | | | | | | | | | | | | | | | |
| Heating A7/W45 | Capacity | kW | 12.00 | | | | | | | | | | | | | | | | | | | | | | | | | | | | | | |
| | COP | - | 3.23 | | | | | | | | | | | | | | | | | | | | | | | | | | | | | | |
| | Power input(*) | kW | 3.72 | | | | | | | | | | | | | | | | | | | | | | | | | | | | | | |
| Heating A2/W35 | Capacity | kW | 14.00 | | | | | | | | | | | | | | | | | | | | | | | | | | | | | | |
| | COP | - | 3.24 | | | | | | | | | | | | | | | | | | | | | | | | | | | | | | |
| | Power input(*) | kW | 4.32 | | | | | | | | | | | | | | | | | | | | | | | | | | | | | | |
| Cooling A35/W7 | Capacity | kW | 12.50 | | | | | | | | | | | - | | | | | | | | | | | 12.50 | | | | | - | | | | |
| | EER | - | 2.60 | | | | | | | | | | | - | | | | | | | | | | | 2.60 | | | | | - | | | | |
| | Power input(*) | kW | 4.81 | | | | | | | | | | | - | | | | | | | | | | | 4.81 | | | | | - | | | | |
| Cooling A35/W18 | Capacity | kW | 14.00 | | | | | | | | | | | - | | | | | | | | | | | 14.00 | | | | | - | | | | |
| | EER | - | 3.62 | | | | | | | | | | | - | | | | | | | | | | | 3.62 | | | | | - | | | | |
| | Power input(*) | kW | 3.87 | | | | | | | | | | | - | | | | | | | | | | | 3.87 | | | | | - | | | | |

* The pump input value is not included.

Heating A7W35: Heating outside air DB 7°C/WB 6°C, Water outlet temperature 35°C (ΔT=5°C)
A7W45: Heating outside air DB 7°C/WB 6°C, Water outlet temperature 45°C (ΔT=5°C)
A2W35: Heating outside air DB 2°C/WB 1°C, Water outlet temperature 35°C ( ΔT=5°C)

Cooling A35/W7: Cooling outside air DB 35°C, Water outlet temperature 7°C (ΔT=5°C)

A35/W18: Cooling outside air DB 35°C, Water outlet temperature 18°C (ΔT=5°C)

| | | | Cylinder unit | | | | | | | | | | | | | | | | Hydrobox | | | | | | | | | |
|---|---|---|---|---|---|---|---|---|---|---|---|---|---|---|---|---|---|---|---|---|---|---|---|---|---|---|---|---|
| | | | ERST20C-VM2D | ERST20C-VM6D | ERST20C-YM9D | ERST30C-VM2ED | ERST30C-VM6ED | ERST30C-YM9ED | EHST20C-MED | EHST20C-VM2D | EHST20C-VM6D | EHST20C-YM9D | EHST20C-YM9ED | EHST20C-TM9D | EHST30C-MED | EHST30C-VM6ED | EHST30C-YM9ED | EHST30C-TM9ED | ERSC-MED | ERSC-VM2D | ERSC-VM6D | ERSC-YM9D | EHSC-MED | EHSC-VM2D | EHSC-VM6D | EHSC-YM9D | EHSC-YM9ED | EHSC-TM9D |
| Outdoor unit | | | PUHZ-SW100VAA/YAA(-BS) | | | | | | | | | | | | | | | | | | | | | | | | | |
| Heating A7/W35 | Capacity | kW | 11.20 | | | | | | | | | | | | | | | | | | | | | | | | | |
| | COP | - | 4.45 | | | | | | | | | | | | | | | | | | | | | | | | | |
| | Power input(*) | kW | 2.51 | | | | | | | | | | | | | | | | | | | | | | | | | |
| Heating A7/W45 | Capacity | kW | 11.20 | | | | | | | | | | | | | | | | | | | | | | | | | |
| | COP | - | 3.42 | | | | | | | | | | | | | | | | | | | | | | | | | |
| | Power input(*) | kW | 3.28 | | | | | | | | | | | | | | | | | | | | | | | | | |
| Heating A2/W35 | Capacity | kW | 10.00 | | | | | | | | | | | | | | | | | | | | | | | | | |
| | COP | - | 3.32 | | | | | | | | | | | | | | | | | | | | | | | | | |
| | Power input(*) | kW | 3.01 | | | | | | | | | | | | | | | | | | | | | | | | | |
| Cooling A35/W7 | Capacity | kW | 9.10 | | | | | | - | | | | | | | | | | 9.10 | | | | - | | | | | |
| | EER | - | 2.75 | | | | | | - | | | | | | | | | | 2.75 | | | | - | | | | | |
| | Power input(*) | kW | 3.31 | | | | | | - | | | | | | | | | | 3.31 | | | | - | | | | | |
| Cooling A35/W18 | Capacity | kW | 10.00 | | | | | | - | | | | | | | | | | 10.00 | | | | - | | | | | |
| | EER | - | 4.35 | | | | | | - | | | | | | | | | | 4.35 | | | | - | | | | | |
| | Power input(*) | kW | 2.30 | | | | | | - | | | | | | | | | | 2.30 | | | | - | | | | | |
| Outdoor unit | | | PUHZ-SW120VHA/YHA(-BS) | | | | | | | | | | | | | | | | | | | | | | | | | |
| Heating A7/W35 | Capacity | kW | 16.00 | | | | | | | | | | | | | | | | | | | | | | | | | |
| | COP | - | 4.10 | | | | | | | | | | | | | | | | | | | | | | | | | |
| | Power input(*) | kW | 3.90 | | | | | | | | | | | | | | | | | | | | | | | | | |
| Heating A7/W45 | Capacity | kW | 16.00 | | | | | | | | | | | | | | | | | | | | | | | | | |
| | COP | - | 3.23 | | | | | | | | | | | | | | | | | | | | | | | | | |
| | Power input(*) | kW | 4.95 | | | | | | | | | | | | | | | | | | | | | | | | | |
| Heating A2/W35 | Capacity | kW | 12.00 | | | | | | | | | | | | | | | | | | | | | | | | | |
| | COP | - | 3.24 | | | | | | | | | | | | | | | | | | | | | | | | | |
| | Power input(*) | kW | 3.70 | | | | | | | | | | | | | | | | | | | | | | | | | |
| Cooling A35/W7 | Capacity | kW | 12.50 | | | | | | - | | | | | | | | | | 12.50 | | | | - | | | | | |
| | EER | - | 2.32 | | | | | | - | | | | | | | | | | 2.32 | | | | - | | | | | |
| | Power input(*) | kW | 5.39 | | | | | | - | | | | | | | | | | 5.39 | | | | - | | | | | |
| Cooling A35/W18 | Capacity | kW | 14.00 | | | | | | - | | | | | | | | | | 14.00 | | | | - | | | | | |
| | EER | - | 4.08 | | | | | | - | | | | | | | | | | 4.08 | | | | - | | | | | |
| | Power input(*) | kW | 3.43 | | | | | | - | | | | | | | | | | 3.43 | | | | - | | | | | |
| Outdoor unit | | | PUHZ-FRP71VHA2 | | | | | | | | | | | | | | | | | | | | | | | | | |
| Heating A7/W35 | Capacity | kW | - | | | | | | 8.00 | | | | | | - | | | | | | | | 8.00 | | | | | |
| | COP | - | - | | | | | | 4.08 | | | | | | - | | | | | | | | 4.08 | | | | | |
| | Power input(*) | kW | - | | | | | | 1.96 | | | | | | - | | | | | | | | 1.96 | | | | | |
| Heating A7/W45 | Capacity | kW | - | | | | | | 8.00 | | | | | | - | | | | | | | | 8.00 | | | | | |
| | COP | - | - | | | | | | 3.22 | | | | | | - | | | | | | | | 3.22 | | | | | |
| | Power input(*) | kW | - | | | | | | 2.48 | | | | | | - | | | | | | | | 2.48 | | | | | |
| Heating A2/W35 | Capacity | kW | - | | | | | | 7.50 | | | | | | - | | | | | | | | 7.50 | | | | | |
| | COP | - | - | | | | | | 2.83 | | | | | | - | | | | | | | | 2.83 | | | | | |
| | Power input(*) | kW | - | | | | | | 2.65 | | | | | | - | | | | | | | | 2.65 | | | | | |
| Cooling A35/W7 | Capacity | kW | - | | | | | | | | | | | | | | | | | | | | | | | | | |
| | EER | - | - | | | | | | | | | | | | | | | | | | | | | | | | | |
| | Power input(*) | kW | - | | | | | | | | | | | | | | | | | | | | | | | | | |
| Cooling A35/W18 | Capacity | kW | - | | | | | | | | | | | | | | | | | | | | | | | | | |
| | EER | - | - | | | | | | | | | | | | | | | | | | | | | | | | | |
| | Power input(*) | kW | - | | | | | | | | | | | | | | | | | | | | | | | | | |

* The pump input value is not included.
Heating A7W35: Heating outside air DB 7°C/WB 6°C, Water outlet temperature 35°C (ΔT=5°C)
A7W45: Heating outside air DB 7°C/WB 6°C, Water outlet temperature 45°C (ΔT=5°C)
A2W35: Heating outside air DB 2°C/WB 1°C, Water outlet temperature 35°C ( ΔT=5°C)
Cooling A35/W7: Cooling outside air DB 35°C, Water outlet temperature 7°C (ΔT=5°C)
A35/W18: Cooling outside air DB 35°C, Water outlet temperature 18°C (ΔT=5°C)

| | | | Cylinder unit | | | | | | | | | | | | | | | | | | | | | | Hydrobox | | | | | | | | | |
|---|---|---|---|---|---|---|---|---|---|---|---|---|---|---|---|---|---|---|---|---|---|---|---|---|---|---|---|---|---|---|---|---|---|---|
| | | | ERST17D-VM2D | ERST17D-VM2BD | ERST17D-VM6D | ERST17D-VM6BD | ERST17D-YM9BD | ERST20D-VM2D | ERST20D-VM6D | ERST20D-YM9D | ERST30D-VM2ED | ERST30D-VM6ED | ERST30D-YM9ED | EHST17D-VM2D | EHST17D-YM9D | EHST20D-MED | EHST20D-VM2D | EHST20D-VM6D | EHST20D-YM9D | EHST20D-YM9ED | EHST20D-TM9D | EHST30D-MED | EHST30D-VM6ED | EHST30D-YM9ED | EHST30D-TM9ED | ERSD-MED | ERSD-VM2D | ERSD-VM6D | ERSD-YM9D | EHSD-MED | EHSD-VM2D | EHSD-VM6D | EHSD-YM9D | EHSD-YM9ED | EHSD-TM9D |
| Outdoor unit | | | PUD-SWM60VAA(-BS) | | | | | | | | | | | | | | | | | | | | | | | | | | | | | | | |
| Heating A7/W35 | Capacity | kW | 5.00 | | | | | | | | | | | | | | | | | | | | | | | | | | | | | | | |
| | COP | - | 4.76 | | | | | | | | | | | | | | | | | | | | | | | | | | | | | | | |
| | Power input(*) | kW | 1.05 | | | | | | | | | | | | | | | | | | | | | | | | | | | | | | | |
| Heating A7/W45 | Capacity | kW | 5.00 | | | | | | | | | | | | | | | | | | | | | | | | | | | | | | | |
| | COP | - | 3.60 | | | | | | | | | | | | | | | | | | | | | | | | | | | | | | | |
| | Power input(*) | kW | 1.39 | | | | | | | | | | | | | | | | | | | | | | | | | | | | | | | |
| Heating A2/W35 | Capacity | kW | 6.00 | | | | | | | | | | | | | | | | | | | | | | | | | | | | | | | |
| | COP | - | 3.60 | | | | | | | | | | | | | | | | | | | | | | | | | | | | | | | |
| | Power input(*) | kW | 1.67 | | | | | | | | | | | | | | | | | | | | | | | | | | | | | | | |
| Cooling A35/W7 | Capacity | kW | - | | | | | | | | | | | | | | | | | | | | | | | | | | | | | | | |
| | EER | - | - | | | | | | | | | | | | | | | | | | | | | | | | | | | | | | | |
| | Power input(*) | kW | - | | | | | | | | | | | | | | | | | | | | | | | | | | | | | | | |
| Cooling A35/W18 | Capacity | kW | - | | | | | | | | | | | | | | | | | | | | | | | | | | | | | | | |
| | EER | - | - | | | | | | | | | | | | | | | | | | | | | | | | | | | | | | | |
| | Power input(*) | kW | - | | | | | | | | | | | | | | | | | | | | | | | | | | | | | | | |
| Outdoor unit | | | PUD-SWM80VAA/YAA(-BS) | | | | | | | | | | | | | | | | | | | | | | | | | | | | | | | |
| Heating A7/W35 | Capacity | kW | 6.00 | | | | | | | | | | | | | | | | | | | | | | | | | | | | | | | |
| | COP | - | 4.76 | | | | | | | | | | | | | | | | | | | | | | | | | | | | | | | |
| | Power input(*) | kW | 1.26 | | | | | | | | | | | | | | | | | | | | | | | | | | | | | | | |
| Heating A7/W45 | Capacity | kW | 6.00 | | | | | | | | | | | | | | | | | | | | | | | | | | | | | | | |
| | COP | - | 3.65 | | | | | | | | | | | | | | | | | | | | | | | | | | | | | | | |
| | Power input(*) | kW | 1.64 | | | | | | | | | | | | | | | | | | | | | | | | | | | | | | | |
| Heating A2/W35 | Capacity | kW | 8.00 | | | | | | | | | | | | | | | | | | | | | | | | | | | | | | | |
| | COP | - | 3.55 | | | | | | | | | | | | | | | | | | | | | | | | | | | | | | | |
| | Power input(*) | kW | 2.25 | | | | | | | | | | | | | | | | | | | | | | | | | | | | | | | |
| Cooling A35/W7 | Capacity | kW | - | | | | | | | | | | | | | | | | | | | | | | | | | | | | | | | |
| | EER | - | - | | | | | | | | | | | | | | | | | | | | | | | | | | | | | | | |
| | Power input(*) | kW | - | | | | | | | | | | | | | | | | | | | | | | | | | | | | | | | |
| Cooling A35/W18 | Capacity | kW | - | | | | | | | | | | | | | | | | | | | | | | | | | | | | | | | |
| | EER | - | - | | | | | | | | | | | | | | | | | | | | | | | | | | | | | | | |
| | Power input(*) | kW | - | | | | | | | | | | | | | | | | | | | | | | | | | | | | | | | |
| Outdoor unit | | | PUD-SWM100VAA/YAA(-BS) | | | | | | | | | | | | | | | | | | | | | | | | | | | | | | | |
| Heating A7/W35 | Capacity | kW | - | | | | | 8.00 | | | | | | - | | 8.00 | | | | | | | | | | | | | | | | | | |
| | COP | - | - | | | | | 5.00 | | | | | | - | | 5.00 | | | | | | | | | | | | | | | | | | |
| | Power input(*) | kW | - | | | | | 1.60 | | | | | | - | | 1.60 | | | | | | | | | | | | | | | | | | |
| Heating A7/W45 | Capacity | kW | - | | | | | 8.00 | | | | | | - | | 8.00 | | | | | | | | | | | | | | | | | | |
| | COP | - | - | | | | | 3.60 | | | | | | - | | 3.60 | | | | | | | | | | | | | | | | | | |
| | Power input(*) | kW | - | | | | | 2.22 | | | | | | - | | 2.22 | | | | | | | | | | | | | | | | | | |
| Heating A2/W35 | Capacity | kW | - | | | | | 10.00 | | | | | | - | | 10.00 | | | | | | | | | | | | | | | | | | |
| | COP | - | - | | | | | 3.30 | | | | | | - | | 3.30 | | | | | | | | | | | | | | | | | | |
| | Power input(*) | kW | - | | | | | 3.03 | | | | | | - | | 3.03 | | | | | | | | | | | | | | | | | | |
| Cooling A35/W7 | Capacity | kW | - | | | | | | | | | | | | | | | | | | | | | | | | | | | | | | | |
| | EER | - | - | | | | | | | | | | | | | | | | | | | | | | | | | | | | | | | |
| | Power input(*) | kW | - | | | | | | | | | | | | | | | | | | | | | | | | | | | | | | | |
| Cooling A35/W18 | Capacity | kW | - | | | | | | | | | | | | | | | | | | | | | | | | | | | | | | | |
| | EER | - | - | | | | | | | | | | | | | | | | | | | | | | | | | | | | | | | |
| | Power input(*) | kW | - | | | | | | | | | | | | | | | | | | | | | | | | | | | | | | | |
| Outdoor unit | | | PUD-SWM120VAA/YAA(-BS) | | | | | | | | | | | | | | | | | | | | | | | | | | | | | | | |
| Heating A7/W35 | Capacity | kW | - | | | | | 10.00 | | | | | | - | | 10.00 | | | | | | | | | | | | | | | | | | |
| | COP | - | - | | | | | 4.70 | | | | | | - | | 4.70 | | | | | | | | | | | | | | | | | | |
| | Power input(*) | kW | - | | | | | 2.13 | | | | | | - | | 2.13 | | | | | | | | | | | | | | | | | | |
| Heating A7/W45 | Capacity | kW | - | | | | | 10.00 | | | | | | - | | 10.00 | | | | | | | | | | | | | | | | | | |
| | COP | - | - | | | | | 3.40 | | | | | | - | | 3.40 | | | | | | | | | | | | | | | | | | |
| | Power input(*) | kW | - | | | | | 2.94 | | | | | | - | | 2.94 | | | | | | | | | | | | | | | | | | |
| Heating A2/W35 | Capacity | kW | - | | | | | 12.00 | | | | | | - | | 12.00 | | | | | | | | | | | | | | | | | | |
| | COP | - | - | | | | | 3.24 | | | | | | - | | 3.24 | | | | | | | | | | | | | | | | | | |
| | Power input(*) | kW | - | | | | | 3.70 | | | | | | - | | 3.70 | | | | | | | | | | | | | | | | | | |
| Cooling A35/W7 | Capacity | kW | - | | | | | | | | | | | | | | | | | | | | | | | | | | | | | | | |
| | EER | - | - | | | | | | | | | | | | | | | | | | | | | | | | | | | | | | | |
| | Power input(*) | kW | - | | | | | | | | | | | | | | | | | | | | | | | | | | | | | | | |
| Cooling A35/W18 | Capacity | kW | - | | | | | | | | | | | | | | | | | | | | | | | | | | | | | | | |
| | EER | - | - | | | | | | | | | | | | | | | | | | | | | | | | | | | | | | | |
| | Power input(*) | kW | - | | | | | | | | | | | | | | | | | | | | | | | | | | | | | | | |

* The pump input value is not included.
Heating A7W35: Heating outside air DB 7°C/WB 6°C, Water outlet temperature 35°C (ΔT=5°C)
A7W45: Heating outside air DB 7°C/WB 6°C, Water outlet temperature 45°C (ΔT=5°C)
A2W35: Heating outside air DB 2°C/WB 1°C, Water outlet temperature 35°C ( ΔT=5°C)
Cooling A35/W7: Cooling outside air DB 35°C, Water outlet temperature 7°C (ΔT=5°C)
A35/W18: Cooling outside air DB 35°C, Water outlet temperature 18°C (ΔT=5°C)
A35/W18: Cooling outside air DB 35°C, Water outlet temperature 18°C (ΔT=5°C)

| | | | Cylinder unit | | | | | | | | | | | | | | | | | | | | | | | Hydrobox | | | | | | | | | |
|---|---|---|---|---|---|---|---|---|---|---|---|---|---|---|---|---|---|---|---|---|---|---|---|---|---|---|---|---|---|---|---|---|---|---|---|
| | | | ERST17D-VM2D | ERST17D-VM2BD | ERST17D-VM6D | ERST17D-VM6BD | ERST17D-YM9BD | ERST20D-VM2D | ERST20D-VM6D | ERST20D-YM9D | ERST30D-VM2ED | ERST30D-VM6ED | ERST30D-YM9ED | EHST17D-VM2D | EHST17D-YM9D | EHST20D-MED | EHST20D-VM2D | EHST20D-VM6D | EHST20D-YM9D | EHST20D-YM9ED | EHST20D-TM9D | EHST30D-MED | EHST30D-VM6ED | EHST30D-YM9ED | EHST30D-TM9ED | ERSD-MED | ERSD-VM2D | ERSD-VM6D | ERSD-YM9D | EHSD-MED | EHSD-VM2D | EHSD-VM6D | EHSD-YM9D | EHSD-YM9ED | EHSD-TM9D |
| Outdoor unit | | | PUD-SHWM60VAA(-BS) | | | | | | | | | | | | | | | | | | | | | | | | | | | | | | | | |
| Heating A7/W35 | Capacity | kW | 5.00 | | | | | | | | | | | | | | | | | | | | | | | | | | | | | | | | |
| | COP | - | 4.99 | | | | | | | | | | | | | | | | | | | | | | | | | | | | | | | | |
| | Power input(*) | kW | 1.00 | | | | | | | | | | | | | | | | | | | | | | | | | | | | | | | | |
| Heating A7/W45 | Capacity | kW | 5.00 | | | | | | | | | | | | | | | | | | | | | | | | | | | | | | | | |
| | COP | - | 3.60 | | | | | | | | | | | | | | | | | | | | | | | | | | | | | | | | |
| | Power input(*) | kW | 1.39 | | | | | | | | | | | | | | | | | | | | | | | | | | | | | | | | |
| Heating A2/W35 | Capacity | kW | 6.00 | | | | | | | | | | | | | | | | | | | | | | | | | | | | | | | | |
| | COP | - | 3.80 | | | | | | | | | | | | | | | | | | | | | | | | | | | | | | | | |
| | Power input(*) | kW | 1.58 | | | | | | | | | | | | | | | | | | | | | | | | | | | | | | | | |
| Cooling A35/W7 | Capacity | kW | - | | | | | | | | | | | | | | | | | | | | | | | | | | | | | | | | |
| | EER | - | - | | | | | | | | | | | | | | | | | | | | | | | | | | | | | | | | |
| | Power input(*) | kW | - | | | | | | | | | | | | | | | | | | | | | | | | | | | | | | | | |
| Cooling A35/W18 | Capacity | kW | - | | | | | | | | | | | | | | | | | | | | | | | | | | | | | | | | |
| | EER | - | - | | | | | | | | | | | | | | | | | | | | | | | | | | | | | | | | |
| | Power input(*) | kW | - | | | | | | | | | | | | | | | | | | | | | | | | | | | | | | | | |
| Outdoor unit | | | PUD-SHWM80VAA/YAA(-BS) | | | | | | | | | | | | | | | | | | | | | | | | | | | | | | | | |
| Heating A7/W35 | Capacity | kW | 6.00 | | | | | | | | | | | | | | | | | | | | | | | | | | | | | | | | |
| | COP | - | 5.03 | | | | | | | | | | | | | | | | | | | | | | | | | | | | | | | | |
| | Power input(*) | kW | 1.19 | | | | | | | | | | | | | | | | | | | | | | | | | | | | | | | | |
| Heating A7/W45 | Capacity | kW | 6.00 | | | | | | | | | | | | | | | | | | | | | | | | | | | | | | | | |
| | COP | - | 3.65 | | | | | | | | | | | | | | | | | | | | | | | | | | | | | | | | |
| | Power input(*) | kW | 1.64 | | | | | | | | | | | | | | | | | | | | | | | | | | | | | | | | |
| Heating A2/W35 | Capacity | kW | 8.00 | | | | | | | | | | | | | | | | | | | | | | | | | | | | | | | | |
| | COP | - | 3.75 | | | | | | | | | | | | | | | | | | | | | | | | | | | | | | | | |
| | Power input(*) | kW | 2.13 | | | | | | | | | | | | | | | | | | | | | | | | | | | | | | | | |
| Cooling A35/W7 | Capacity | kW | - | | | | | | | | | | | | | | | | | | | | | | | | | | | | | | | | |
| | EER | - | - | | | | | | | | | | | | | | | | | | | | | | | | | | | | | | | | |
| | Power input(*) | kW | - | | | | | | | | | | | | | | | | | | | | | | | | | | | | | | | | |
| Cooling A35/W18 | Capacity | kW | - | | | | | | | | | | | | | | | | | | | | | | | | | | | | | | | | |
| | EER | - | - | | | | | | | | | | | | | | | | | | | | | | | | | | | | | | | | |
| | Power input(*) | kW | - | | | | | | | | | | | | | | | | | | | | | | | | | | | | | | | | |
| Outdoor unit | | | PUD-SHWM100VAA/YAA(-BS) | | | | | | | | | | | | | | | | | | | | | | | | | | | | | | | | |
| Heating A7/W35 | Capacity | kW | - | | | | | 8.00 | | | | | | - | | 8.00 | | | | | | | | | | | | | | | | | | | |
| | COP | - | - | | | | | 5.00 | | | | | | - | | 5.00 | | | | | | | | | | | | | | | | | | | |
| | Power input(*) | kW | - | | | | | 1.60 | | | | | | - | | 1.60 | | | | | | | | | | | | | | | | | | | |
| Heating A7/W45 | Capacity | kW | - | | | | | 8.00 | | | | | | - | | 8.00 | | | | | | | | | | | | | | | | | | | |
| | COP | - | - | | | | | 3.65 | | | | | | - | | 3.65 | | | | | | | | | | | | | | | | | | | |
| | Power input(*) | kW | - | | | | | 2.19 | | | | | | - | | 2.19 | | | | | | | | | | | | | | | | | | | |
| Heating A2/W35 | Capacity | kW | - | | | | | 10.00 | | | | | | - | | 10.00 | | | | | | | | | | | | | | | | | | | |
| | COP | - | - | | | | | 3.45 | | | | | | - | | 3.45 | | | | | | | | | | | | | | | | | | | |
| | Power input(*) | kW | - | | | | | 2.90 | | | | | | - | | 2.90 | | | | | | | | | | | | | | | | | | | |
| Cooling A35/W7 | Capacity | kW | - | | | | | | | | | | | | | | | | | | | | | | | | | | | | | | | | |
| | EER | - | - | | | | | | | | | | | | | | | | | | | | | | | | | | | | | | | | |
| | Power input(*) | kW | - | | | | | | | | | | | | | | | | | | | | | | | | | | | | | | | | |
| Cooling A35/W18 | Capacity | kW | - | | | | | | | | | | | | | | | | | | | | | | | | | | | | | | | | |
| | EER | - | - | | | | | | | | | | | | | | | | | | | | | | | | | | | | | | | | |
| | Power input(*) | kW | - | | | | | | | | | | | | | | | | | | | | | | | | | | | | | | | | |

* The pump input value is not included.
Heating A7W35: Heating outside air DB 7°C/WB 6°C, Water outlet temperature 35°C (ΔT=5°C)
A7W45: Heating outside air DB 7°C/WB 6°C, Water outlet temperature 45°C (ΔT=5°C)
A2W35: Heating outside air DB 2°C/WB 1°C, Water outlet temperature 35°C ( ΔT=5°C)
Cooling A35/W7: Cooling outside air DB 35°C, Water outlet temperature 7°C (ΔT=5°C)
A35/W18: Cooling outside air DB 35°C, Water outlet temperature 18°C (ΔT=5°C)

| | | | Cylinder unit | | | | | | | | | | | | | | | | | | | | | | | Hydrobox | | | | | | | | | |
|---|---|---|---|---|---|---|---|---|---|---|---|---|---|---|---|---|---|---|---|---|---|---|---|---|---|---|---|---|---|---|---|---|---|---|---|
| | | | ERST17D-VM2D | ERST17D-VM2BD | ERST17D-VM6D | ERST17D-VM6BD | ERST17D-YM9BD | ERST20D-VM2D | ERST20D-VM6D | ERST20D-YM9D | ERST30D-VM2ED | ERST30D-VM6ED | ERST30D-YM9ED | EHST17D-VM2D | EHST17D-YM9D | EHST20D-MED | EHST20D-VM2D | EHST20D-VM6D | EHST20D-YM9D | EHST20D-YM9ED | EHST20D-TM9D | EHST30D-MED | EHST30D-VM6ED | EHST30D-YM9ED | EHST30D-TM9ED | ERSD-MED | ERSD-VM2D | ERSD-VM6D | ERSD-YM9D | EHSD-MED | EHSD-VM2D | EHSD-VM6D | EHSD-YM9D | EHSD-YM9ED | EHSD-TM9D |
| Outdoor unit | | | PUD-SHWM120VAA/YAA(-BS) | | | | | | | | | | | | | | | | | | | | | | | | | | | | | | | | |
| Heating A7/W35 | Capacity | kW | - | | | | | 10.00 | | | | | | - | 10.00 | | | | | | | | | | | | | | | | | | | | |
| | COP | - | - | | | | | 4.80 | | | | | | - | 4.80 | | | | | | | | | | | | | | | | | | | | |
| | Power input(*) | kW | - | | | | | 2.08 | | | | | | - | 2.08 | | | | | | | | | | | | | | | | | | | | |
| Heating A7/W45 | Capacity | kW | - | | | | | 10.00 | | | | | | - | 10.00 | | | | | | | | | | | | | | | | | | | | |
| | COP | - | - | | | | | 3.40 | | | | | | - | 3.40 | | | | | | | | | | | | | | | | | | | | |
| | Power input(*) | kW | - | | | | | 2.94 | | | | | | - | 2.94 | | | | | | | | | | | | | | | | | | | | |
| Heating A2/W35 | Capacity | kW | - | | | | | 12.00 | | | | | | - | 12.00 | | | | | | | | | | | | | | | | | | | | |
| | COP | - | - | | | | | 3.30 | | | | | | - | 3.30 | | | | | | | | | | | | | | | | | | | | |
| | Power input(*) | kW | - | | | | | 3.64 | | | | | | - | 3.64 | | | | | | | | | | | | | | | | | | | | |
| Cooling A35/W7 | Capacity | kW | - | | | | | | | | | | | | | | | | | | | | | | | | | | | | | | | | |
| | EER | - | - | | | | | | | | | | | | | | | | | | | | | | | | | | | | | | | | |
| | Power input(*) | kW | - | | | | | | | | | | | | | | | | | | | | | | | | | | | | | | | | |
| Cooling A35/W18 | Capacity | kW | - | | | | | | | | | | | | | | | | | | | | | | | | | | | | | | | | |
| | EER | - | - | | | | | | | | | | | | | | | | | | | | | | | | | | | | | | | | |
| | Power input(*) | kW | - | | | | | | | | | | | | | | | | | | | | | | | | | | | | | | | | |
| Outdoor unit | | | PUD-SHWM140VAA/YAA(-BS) | | | | | | | | | | | | | | | | | | | | | | | | | | | | | | | | |
| Heating A7/W35 | Capacity | kW | - | | | | | 12.00 | | | | | | - | 12.00 | | | | | | | | | | | | | | | | | | | | |
| | COP | - | - | | | | | 4.70 | | | | | | - | 4.70 | | | | | | | | | | | | | | | | | | | | |
| | Power input(*) | kW | - | | | | | 2.55 | | | | | | - | 2.55 | | | | | | | | | | | | | | | | | | | | |
| Heating A7/W45 | Capacity | kW | - | | | | | 12.00 | | | | | | - | 12.00 | | | | | | | | | | | | | | | | | | | | |
| | COP | - | - | | | | | 3.20 | | | | | | - | 3.20 | | | | | | | | | | | | | | | | | | | | |
| | Power input(*) | kW | - | | | | | 3.75 | | | | | | - | 3.75 | | | | | | | | | | | | | | | | | | | | |
| Heating A2/W35 | Capacity | kW | - | | | | | 14.00 | | | | | | - | 14.00 | | | | | | | | | | | | | | | | | | | | |
| | COP | - | - | | | | | 3.05 | | | | | | - | 3.05 | | | | | | | | | | | | | | | | | | | | |
| | Power input(*) | kW | - | | | | | 4.59 | | | | | | - | 4.59 | | | | | | | | | | | | | | | | | | | | |
| Cooling A35/W7 | Capacity | kW | - | | | | | | | | | | | | | | | | | | | | | | | | | | | | | | | | |
| | EER | - | - | | | | | | | | | | | | | | | | | | | | | | | | | | | | | | | | |
| | Power input(*) | kW | - | | | | | | | | | | | | | | | | | | | | | | | | | | | | | | | | |
| Cooling A35/W18 | Capacity | kW | - | | | | | | | | | | | | | | | | | | | | | | | | | | | | | | | | |
| | EER | - | - | | | | | | | | | | | | | | | | | | | | | | | | | | | | | | | | |
| | Power input(*) | kW | - | | | | | | | | | | | | | | | | | | | | | | | | | | | | | | | | |
| Outdoor unit | | | PXZ-4F75VG | | | | | | | | | | | | | | | | | | | | | | | | | | | | | | | | |
| Heating A7/W35 | Capacity | kW | 7.50 | - | 7.50 | - | | 7.50 | | | | | | - | 7.50 | | | - | 7.50 | | | - | 7.50 | | | - | 7.50 | | | - | 7.50 | | | | |
| | COP | - | 4.17 | - | 4.17 | - | | 4.17 | | | | | | - | 4.17 | | | - | 4.17 | | | - | 4.17 | | | - | 4.17 | | | - | 4.17 | | | | |
| | Power input(*) | kW | 1.80 | - | 1.80 | - | | 1.80 | | | | | | - | 1.80 | | | - | 1.80 | | | - | 1.80 | | | - | 1.80 | | | - | 1.80 | | | | |
| Heating A7/W45 | Capacity | kW | 7.50 | - | 7.50 | - | | 7.50 | | | | | | - | 7.50 | | | - | 7.50 | | | - | 7.50 | | | - | 7.50 | | | - | 7.50 | | | | |
| | COP | - | 3.32 | - | 3.32 | - | | 3.32 | | | | | | - | 3.32 | | | - | 3.32 | | | - | 3.32 | | | - | 3.32 | | | - | 3.32 | | | | |
| | Power input(*) | kW | 2.26 | - | 2.26 | - | | 2.26 | | | | | | - | 2.26 | | | - | 2.26 | | | - | 2.26 | | | - | 2.26 | | | - | 2.26 | | | | |
| Heating A2/W35 | Capacity | kW | 6.80 | - | 6.80 | - | | 6.80 | | | | | | - | 6.80 | | | - | 6.80 | | | - | 6.80 | | | - | 6.80 | | | - | 6.80 | | | | |
| | COP | - | 2.80 | - | 2.80 | - | | 2.80 | | | | | | - | 2.80 | | | - | 2.80 | | | - | 2.80 | | | - | 2.80 | | | - | 2.80 | | | | |
| | Power input(*) | kW | 2.43 | - | 2.43 | - | | 2.43 | | | | | | - | 2.43 | | | - | 2.43 | | | - | 2.43 | | | - | 2.43 | | | | 2.43 | | | | |
| Cooling A35/W7 | Capacity | kW | - | | | | | | | | | | | | | | | | | | | | | | | | | | | | | | | | |
| | EER | - | - | | | | | | | | | | | | | | | | | | | | | | | | | | | | | | | | |
| | Power input(*) | kW | - | | | | | | | | | | | | | | | | | | | | | | | | | | | | | | | | |
| Cooling A35/W18 | Capacity | kW | - | | | | | | | | | | | | | | | | | | | | | | | | | | | | | | | | |
| | EER | - | - | | | | | | | | | | | | | | | | | | | | | | | | | | | | | | | | |
| | Power input(*) | kW | - | | | | | | | | | | | | | | | | | | | | | | | | | | | | | | | | |
| Outdoor unit | | | PXZ-5F85VG | | | | | | | | | | | | | | | | | | | | | | | | | | | | | | | | |
| Heating A7/W35 | Capacity | kW | 8.50 | - | 8.50 | - | | 8.50 | | | | | | - | 8.50 | | | - | 8.50 | | | - | 8.50 | | | - | 8.50 | | | - | 8.50 | | | | |
| | COP | - | 4.34 | - | 4.34 | - | | 4.34 | | | | | | - | 4.34 | | | - | 4.34 | | | - | 4.34 | | | - | 4.34 | | | - | 4.34 | | | | |
| | Power input(*) | kW | 1.96 | - | 1.96 | - | | 1.96 | | | | | | - | 1.96 | | | - | 1.96 | | | - | 1.96 | | | - | 1.96 | | | - | 1.96 | | | | |
| Heating A7/W45 | Capacity | kW | 8.50 | - | 8.50 | - | | 8.50 | | | | | | - | 8.50 | | | - | 8.50 | | | - | 8.50 | | | - | 8.50 | | | - | 8.50 | | | | |
| | COP | - | 3.48 | - | 3.48 | - | | 3.48 | | | | | | - | 3.48 | | | - | 3.48 | | | - | 3.48 | | | - | 3.48 | | | - | 3.48 | | | | |
| | Power input(*) | kW | 2.45 | - | 2.45 | - | | 2.45 | | | | | | - | 2.45 | | | - | 2.45 | | | - | 2.45 | | | - | 2.45 | | | - | 2.45 | | | | |
| Heating A2/W35 | Capacity | kW | 7.80 | - | 7.80 | - | | 7.80 | | | | | | - | 7.80 | | | - | 7.80 | | | - | 7.80 | | | - | 7.80 | | | - | 7.80 | | | | |
| | COP | - | 3.00 | - | 3.00 | - | | 3.00 | | | | | | - | 3.00 | | | - | 3.00 | | | - | 3.00 | | | - | 3.00 | | | - | 3.00 | | | | |
| | Power input(*) | kW | 2.60 | - | 2.60 | - | | 2.60 | | | | | | - | 2.60 | | | - | 2.60 | | | - | 2.60 | | | - | 2.60 | | | - | 2.60 | | | | |
| Cooling A35/W7 | Capacity | kW | - | | | | | | | | | | | | | | | | | | | | | | | | | | | | | | | | |
| | EER | - | - | | | | | | | | | | | | | | | | | | | | | | | | | | | | | | | | |
| | Power input(*) | kW | - | | | | | | | | | | | | | | | | | | | | | | | | | | | | | | | | |
| Cooling A35/W18 | Capacity | kW | - | | | | | | | | | | | | | | | | | | | | | | | | | | | | | | | | |
| | EER | - | - | | | | | | | | | | | | | | | | | | | | | | | | | | | | | | | | |
| | Power input(*) | kW | - | | | | | | | | | | | | | | | | | | | | | | | | | | | | | | | | |

* The pump input value is not included.
Heating A7W35: Heating outside air DB 7°C/WB 6°C, Water outlet temperature 35°C (ΔT=5°C)
A7W45: Heating outside air DB 7°C/WB 6°C, Water outlet temperature 45°C (ΔT=5°C)
A2W35: Heating outside air DB 2°C/WB 1°C, Water outlet temperature 35°C ( ΔT=5°C)
Cooling A35/W7: Cooling outside air DB 35°C, Water outlet temperature 7°C (ΔT=5°C)
A35/W18: Cooling outside air DB 35°C, Water outlet temperature 18°C (ΔT=5°C)

| | | | Cylinder unit | | | | | | | | | | | | | | | | Hydrobox | | | | | | | | | |
|---|---|---|---|---|---|---|---|---|---|---|---|---|---|---|---|---|---|---|---|---|---|---|---|---|---|---|---|---|
| | | | ERST20C-VM2D | ERST20C-VM6D | ERST20C-YM9D | ERST30C-VM2ED | ERST30C-VM6ED | ERST30C-YM9ED | EHST20C-MED | EHST20C-VM2D | EHST20C-VM6D | EHST20C-YM9D | EHST20C-YM9ED | EHST20C-TM9D | EHST30C-MED | EHST30C-VM6ED | EHST30C-YM9ED | EHST30C-TM9ED | ERSC-MED | ERSC-VM2D | ERSC-VM6D | ERSC-YM9D | EHSC-MED | EHSC-VM2D | EHSC-VM6D | EHSC-YM9D | EHSC-YM9ED | EHSC-TM9D |
| Outdoor unit | | | PUHZ-SHW80VAA/YAA(-BS) | | | | | | | | | | | | | | | | | | | | | | | | | |
| Heating A7/W35 | Capacity | kW | 8.00 | | | | | | | | | | | | | | | | | | | | | | | | | |
| | COP | - | 4.65 | | | | | | | | | | | | | | | | | | | | | | | | | |
| | Power input(*) | kW | 1.72 | | | | | | | | | | | | | | | | | | | | | | | | | |
| Heating A7/W45 | Capacity | kW | 8.00 | | | | | | | | | | | | | | | | | | | | | | | | | |
| | COP | - | 3.42 | | | | | | | | | | | | | | | | | | | | | | | | | |
| | Power input(*) | kW | 2.34 | | | | | | | | | | | | | | | | | | | | | | | | | |
| Heating A2/W35 | Capacity | kW | 8.00 | | | | | | | | | | | | | | | | | | | | | | | | | |
| | COP | - | 3.55 | | | | | | | | | | | | | | | | | | | | | | | | | |
| | Power input(*) | kW | 2.25 | | | | | | | | | | | | | | | | | | | | | | | | | |
| Cooling A35/W7 | Capacity | kW | 7.10 | | | | | | - | | | | | | | | | | 7.10 | | | | - | | | | | |
| | EER | - | 3.31 | | | | | | - | | | | | | | | | | 3.31 | | | | - | | | | | |
| | Power input(*) | kW | 2.15 | | | | | | - | | | | | | | | | | 2.15 | | | | - | | | | | |
| Cooling A35/W18 | Capacity | kW | 7.10 | | | | | | - | | | | | | | | | | 7.10 | | | | - | | | | | |
| | EER | - | 4.52 | | | | | | - | | | | | | | | | | 4.52 | | | | - | | | | | |
| | Power input(*) | kW | 1.57 | | | | | | - | | | | | | | | | | 1.57 | | | | - | | | | | |
| Outdoor unit | | | PUHZ-SHW112VAA/YAA(-BS) | | | | | | | | | | | | | | | | | | | | | | | | | |
| Heating A7/W35 | Capacity | kW | 11.20 | | | | | | | | | | | | | | | | | | | | | | | | | |
| | COP | - | 4.46 | | | | | | | | | | | | | | | | | | | | | | | | | |
| | Power input(*) | kW | 2.51 | | | | | | | | | | | | | | | | | | | | | | | | | |
| Heating A7/W45 | Capacity | kW | 11.20 | | | | | | | | | | | | | | | | | | | | | | | | | |
| | COP | - | 3.42 | | | | | | | | | | | | | | | | | | | | | | | | | |
| | Power input(*) | kW | 3.27 | | | | | | | | | | | | | | | | | | | | | | | | | |
| Heating A2/W35 | Capacity | kW | 11.20 | | | | | | | | | | | | | | | | | | | | | | | | | |
| | COP | - | 3.22 | | | | | | | | | | | | | | | | | | | | | | | | | |
| | Power input(*) | kW | 3.48 | | | | | | | | | | | | | | | | | | | | | | | | | |
| Cooling A35/W7 | Capacity | kW | 10.00 | | | | | | - | | | | | | | | | | 10.00 | | | | - | | | | | |
| | EER | - | 2.83 | | | | | | - | | | | | | | | | | 2.83 | | | | - | | | | | |
| | Power input(*) | kW | 3.53 | | | | | | - | | | | | | | | | | 3.53 | | | | - | | | | | |
| Cooling A35/W18 | Capacity | kW | 10.00 | | | | | | - | | | | | | | | | | 10.00 | | | | - | | | | | |
| | EER | - | 4.74 | | | | | | - | | | | | | | | | | 4.74 | | | | - | | | | | |
| | Power input(*) | kW | 2.11 | | | | | | - | | | | | | | | | | 2.11 | | | | - | | | | | |
| Outdoor unit | | | PUHZ-SHW140YHA(-BS) | | | | | | | | | | | | | | | | | | | | | | | | | |
| Heating A7/W35 | Capacity | kW | 14.00 | | | | | | | | | | | | | | | | | | | | | | | | | |
| | COP | - | 4.22 | | | | | | | | | | | | | | | | | | | | | | | | | |
| | Power input(*) | kW | 3.32 | | | | | | | | | | | | | | | | | | | | | | | | | |
| Heating A7/W45 | Capacity | kW | 14.00 | | | | | | | | | | | | | | | | | | | | | | | | | |
| | COP | - | 3.28 | | | | | | | | | | | | | | | | | | | | | | | | | |
| | Power input(*) | kW | 4.27 | | | | | | | | | | | | | | | | | | | | | | | | | |
| Heating A2/W35 | Capacity | kW | 14.00 | | | | | | | | | | | | | | | | | | | | | | | | | |
| | COP | - | 2.96 | | | | | | | | | | | | | | | | | | | | | | | | | |
| | Power input(*) | kW | 4.73 | | | | | | | | | | | | | | | | | | | | | | | | | |
| Cooling A35/W7 | Capacity | kW | 12.50 | | | | | | - | | | | | | | | | | 12.50 | | | | - | | | | | |
| | EER | - | 2.17 | | | | | | - | | | | | | | | | | 2.17 | | | | - | | | | | |
| | Power input(*) | kW | 5.76 | | | | | | - | | | | | | | | | | 5.76 | | | | - | | | | | |
| Cooling A35/W18 | Capacity | kW | 12.50 | | | | | | - | | | | | | | | | | 12.50 | | | | - | | | | | |
| | EER | - | 4.26 | | | | | | - | | | | | | | | | | 4.26 | | | | - | | | | | |
| | Power input(*) | kW | 2.93 | | | | | | - | | | | | | | | | | 2.93 | | | | - | | | | | |

* The pump input value is not included.
Heating A7W35: Heating outside air DB 7°C/WB 6°C, Water outlet temperature 35°C (ΔT=5°C)
A7W45: Heating outside air DB 7°C/WB 6°C, Water outlet temperature 45°C (ΔT=5°C)
A2W35: Heating outside air DB 2°C/WB 1°C, Water outlet temperature 35°C ( ΔT=5°C)
Cooling A35/W7: Cooling outside air DB 35°C, Water outlet temperature 7°C (ΔT=5°C)
A35/W18: Cooling outside air DB 35°C, Water outlet temperature 18°C (ΔT=5°C)

| | | | Hydrobox | | | |
|---|---|---|---|---|---|---|
| | | | ERSE-YM9ED | ERSE-MED | EHSE-YM9ED | EHSE-MED |
| Outdoor unit | | | PUHZ-SW160YKA(-BS) | | | |
| Heating A7/W35 | Capacity | kW | 22.00 | | | |
| | COP | - | 4.20 | | | |
| | Power input(*) | kW | 5.24 | | | |
| Heating A7/W45 | Capacity | kW | 22.00 | | | |
| | COP | - | 3.20 | | | |
| | Power input(*) | kW | 6.88 | | | |
| Heating A2/W35 | Capacity | kW | 16.00 | | | |
| | COP | - | 3.11 | | | |
| | Power input(*) | kW | 5.14 | | | |
| Cooling A35/W7 | Capacity | kW | 16.00 | | - | |
| | EER | - | 2.76 | | - | |
| | Power input(*) | kW | 5.80 | | - | |
| Cooling A35/W18 | Capacity | kW | 18.00 | | - | |
| | EER | - | 4.56 | | - | |
| | Power input(*) | kW | 3.95 | | - | |
| Outdoor unit | | | PUHZ-SW200YKA(-BS) | | | |
| Heating A7/W35 | Capacity | kW | 25.00 | | | |
| | COP | - | 4.00 | | | |
| | Power input(*) | kW | 6.25 | | | |
| Heating A7/W45 | Capacity | kW | 25.00 | | | |
| | COP | - | 3.10 | | | |
| | Power input(*) | kW | 8.06 | | | |
| Heating A2/W35 | Capacity | kW | 20.00 | | | |
| | COP | - | 2.80 | | | |
| | Power input(*) | kW | 7.14 | | | |
| Cooling A35/W7 | Capacity | kW | 20.00 | | - | |
| | EER | - | 2.25 | | - | |
| | Power input(*) | kW | 8.89 | | - | |
| Cooling A35/W18 | Capacity | kW | 22.00 | | - | |
| | EER | - | 4.10 | | - | |
| | Power input(*) | kW | 5.37 | | - | |
| Outdoor unit | | | PUHZ-SHW230YKA2 | | | |
| Heating A7/W35 | Capacity | kW | 23.00 | | | |
| | COP | - | 3.65 | | | |
| | Power input(*) | kW | 6.31 | | | |
| Heating A7/W45 | Capacity | kW | 23.00 | | | |
| | COP | - | 3.02 | | | |
| | Power input(*) | kW | 7.62 | | | |
| Heating A2/W35 | Capacity | kW | 23.00 | | | |
| | COP | - | 2.37 | | | |
| | Power input(*) | kW | 9.71 | | | |
| Cooling A35/W7 | Capacity | kW | 20.00 | | - | |
| | EER | - | 2.22 | | - | |
| | Power input(*) | kW | 9.01 | | - | |
| Cooling A35/W18 | Capacity | kW | 20.00 | | - | |
| | EER | - | 3.55 | | - | |
| | Power input(*) | kW | 5.63 | | - | |

* The pump input value is not included.
Heating A7W35: Heating outside air DB 7°C/WB 6°C, Water outlet temperature 35°C (ΔT=5°C)
A7W45: Heating outside air DB 7°C/WB 6°C, Water outlet temperature 45°C (ΔT=5°C)
A2W35: Heating outside air DB 2°C/WB 1°C, Water outlet temperature 35°C ( ΔT=5°C)
Cooling A35/W7: Cooling outside air DB 35°C, Water outlet temperature 7°C (ΔT=5°C)
A35/W18: Cooling outside air DB 35°C, Water outlet temperature 18°C (ΔT=5°C)

| | | | Cylinder unit | | | | | Hydrobox | | | | |
|---|---|---|---|---|---|---|---|---|---|---|---|---|
| | | | EHST20C-VM2D | EHST20C-VM6D | EHST20C-YM9D | EHST20C-YM9ED | EHST20C-TM9D | EHSC-VM2D | EHSC-VM6D | EHSC-YM9D | EHSC-YM9ED | EHSC-TM9D |
| Outdoor unit | | | **PUMY-P112VKM5/YKM(E)4(-BS)** | | | | | | | | | |
| Heating A7/W35 | Capacity | kW | 12.50 | | | | | | | | | |
| | COP | - | 4.08 | | | | | | | | | |
| | Power input(*) | kW | 3.06 | | | | | | | | | |
| Heating A7/W45 | Capacity | kW | 12.50 | | | | | | | | | |
| | COP | - | 3.06 | | | | | | | | | |
| | Power input(*) | kW | 4.08 | | | | | | | | | |
| Heating A2/W35 | Capacity | kW | 10.00 | | | | | | | | | |
| | COP | - | 2.86 | | | | | | | | | |
| | Power input(*) | kW | 3.50 | | | | | | | | | |
| Outdoor unit | | | **PUMY-P125VKM5/YKM(E)4(-BS)** | | | | | | | | | |
| Heating A7/W35 | Capacity | kW | 12.50 | | | | | | | | | |
| | COP | - | 4.08 | | | | | | | | | |
| | Power input(*) | kW | 3.06 | | | | | | | | | |
| Heating A7/W45 | Capacity | kW | 12.50 | | | | | | | | | |
| | COP | - | 3.06 | | | | | | | | | |
| | Power input(*) | kW | 4.08 | | | | | | | | | |
| Heating A2/W35 | Capacity | kW | 10.00 | | | | | | | | | |
| | COP | - | 2.86 | | | | | | | | | |
| | Power input(*) | kW | 3.50 | | | | | | | | | |
| Outdoor unit | | | **PUMY-P140VKM5/YKM(E)4(-BS)** | | | | | | | | | |
| Heating A7/W35 | Capacity | kW | 12.50 | | | | | | | | | |
| | COP | - | 4.08 | | | | | | | | | |
| | Power input(*) | kW | 3.06 | | | | | | | | | |
| Heating A7/W45 | Capacity | kW | 12.50 | | | | | | | | | |
| | COP | - | 3.06 | | | | | | | | | |
| | Power input(*) | kW | 4.08 | | | | | | | | | |
| Heating A2/W35 | Capacity | kW | 10.00 | | | | | | | | | |
| | COP | - | 2.86 | | | | | | | | | |
| | Power input(*) | kW | 3.50 | | | | | | | | | |

* The pump input value is not included.
Heating A7W35: Heating outside air DB 7°C/WB 6°C, Water outlet temperature 35°C (ΔT=5°C)
A7W45: Heating outside air DB 7°C/WB 6°C, Water outlet temperature 45°C (ΔT=5°C)
A2W35: Heating outside air DB 2°C/WB 1°C, Water outlet temperature 35°C ( ΔT=5°C)
Cooling A35/W7: Cooling outside air DB 35°C, Water outlet temperature 7°C (ΔT=5°C)
A35/W18: Cooling outside air DB 35°C, Water outlet temperature 18°C (ΔT=5°C)

## 3.2 Heat time data (DHW mode)

| Heat time (min) | 170L | | | 200L | | | 300L | | |
|---|---|---|---|---|---|---|---|---|---|
| | Ambient temperature [°C] | | | Ambient temperature [°C] | | | Ambient temperature [°C] | | |
| | 2 | 7 | 14 | 2 | 7 | 14 | 2 | 7 | 14 |
| PUZ-WM50VHA(-BS) | 111 | 102 | 102 | 130 | 120 | 120 | - | - | - |
| PUZ-WM60VAA(-BS) | 94 | 85 | 81 | 110 | 100 | 95 | - | - | - |
| PUZ-WM85V/YAA(-BS) | 68 | 64 | 60 | 80 | 75 | 70 | 120 | 113 | 105 |
| PUZ-WM112V/YAA(-BS) | - | - | - | 65 | 60 | 55 | 98 | 90 | 83 |
| PUZ-HWM140V/YHA(-BS) | - | - | - | 56 | 56 | 51 | 84 | 84 | 76 |
| SUZ-SWM40VA | 111 | 102 | 102 | 130 | 120 | 120 | 226 | 182 | 151 |
| SUZ-SWM60VA | 102 | 94 | 85 | 120 | 110 | 100 | 175 | 152 | 143 |
| SUZ-SWM80VA | 94 | 81 | 77 | 110 | 95 | 90 | 165 | 143 | 135 |
| SUZ-SWM30VA | 98 | 87 | 84 | 115 | 102 | 99 | 173 | 153 | 149 |
| SUZ-SHWM30VAH | 98 | 87 | 84 | 115 | 102 | 99 | 173 | 153 | 149 |
| SUZ-SWM40VA2(-SC) | 98 | 87 | 84 | 115 | 102 | 99 | 173 | 153 | 149 |
| SUZ-SHWM40VAH(-SC) | 112 | 95 | 76 | 132 | 112 | 89 | 198 | 168 | 134 |
| SUZ-SWM60VA2(-SC) | 112 | 95 | 76 | 132 | 112 | 89 | 198 | 168 | 134 |
| SUZ-SHWM60VAH(-SC) | 76 | 61 | 60 | 89 | 72 | 71 | 134 | 108 | 107 |
| SUZ-SWM80VA2 | 76 | 61 | 60 | 89 | 72 | 71 | 134 | 108 | 107 |
| SUZ-SWM80VAH2 | 76 | 61 | 60 | 89 | 72 | 71 | 134 | 108 | 107 |
| SUZ-SWM100VA | 76 | 61 | 60 | 89 | 72 | 71 | 134 | 108 | 107 |
| SUZ-SWM100VAH | 76 | 61 | 60 | 89 | 72 | 71 | 134 | 108 | 107 |
| PUZ-S(H)WM60VAA | 81 | 72 | 68 | 95 | 85 | 80 | 143 | 128 | 120 |
| PUZ-S(H)WM80V/YAA | 68 | 60 | 55 | 80 | 70 | 65 | 120 | 105 | 98 |
| PUZ-S(H)WM100V/YAA | - | - | - | 70 | 65 | 60 | 105 | 98 | 90 |
| PUZ-S(H)WM120V/YAA | - | - | - | 58 | 54 | 50 | 88 | 80 | 73 |
| PUZ-S(H)WM140V/YAA | - | - | - | 52 | 48 | 43 | 78 | 70 | 63 |
| PUHZ-SW75V/YAA(-BS) | 98 | 85 | 81 | 115 | 100 | 95 | 173 | 150 | 143 |
| PUHZ-SW100V/YAA(-BS) | 85 | 77 | 68 | 100 | 90 | 80 | 150 | 135 | 120 |
| PUHZ-SW120V/YHA(-BS) | - | - | - | 85 | 75 | 70 | 128 | 113 | 105 |
| PUHZ-SHW80VAA(-BS) | - | - | - | 80 | 70 | 65 | 120 | 105 | 98 |
| PUHZ-SHW112V/YAA(-BS) | - | - | - | 60 | 60 | 55 | 90 | 90 | 83 |
| PUHZ-SHW140YHA(-BS) | - | - | - | 50 | 50 | 45 | 75 | 75 | 68 |
| PUD-S(H)WM60VAA(-BS) | 81 | 72 | 68 | 95 | 85 | 80 | 143 | 128 | 120 |
| PUD-S(H)WM80V/YAA(-BS) | 68 | 60 | 55 | 80 | 70 | 65 | 120 | 105 | 98 |
| PUD-S(H)WM100V/YAA(-BS) | - | - | - | 70 | 65 | 60 | 105 | 98 | 90 |
| PUD-S(H)WM120V/YAA(-BS) | - | - | - | 60 | 55 | 51 | 90 | 83 | 76 |
| PUD-SHWM140V/YAA(-BS) | - | - | - | 53 | 50 | 45 | 80 | 75 | 68 |
| PXZ-4F75VG | 108 | 79 | 72 | 127 | 93 | 85 | 191 | 140 | 127 |
| PXZ-5F85VG | 98 | 77 | 70 | 115 | 90 | 82 | 173 | 135 | 124 |
| PUHZ-FRP71VHA2 | - | - | - | 122 | 100 | 95 | - | - | - |
| PUMY-P112/125/140VKM5/YKM(E)4(-BS) | - | - | - | 115 | 110 | 95 | - | - | - |

| Heat time (min) | 170L |
|---|---|
| | Brine inlet temp. [°C] |
| | 0 |
| EHGT17D-YM9ED | 75 |

| Heat time (min) | 170L |
|---|---|
| | Water inlet temp. [°C] |
| | 10 |
| EHWT17D-MHEDW | 105 |

<Note>
• Mitsubishi's domestic hot water tank
• Time to raise DHW tank temperature 15-55[°C]
• Reheat time is half of this heat time

## 3.3 Ground source heat pump (GSHP)

### ■ EHGT17D-YM9ED

**Water Flow rate 14.3L/min**
**Brine flow rate 21.6L/min**

| Capacity | Brine inlet temp. °C | COP | | | | | | | | |
|---|---|---|---|---|---|---|---|---|---|---|
| | | Outlet water temp. | | | | | | | | |
| | | 20 | 25 | 30 | 35 | 40 | 45 | 50 | 55 | 60 |
| 200% (10kW) | -7 | - | - | - | - | - | - | - | - | - |
| | -5 | - | - | - | - | - | - | - | - | - |
| | -2 | 6.10 | 5.56 | 4.77 | 4.27 | 3.85 | 3.36 | - | - | - |
| | 0 | 6.70 | 5.91 | 5.04 | 4.48 | 4.02 | 3.49 | 2.76 | 2.55 | 2.36 |
| | 2 | 7.07 | 6.30 | 5.34 | 4.71 | 4.21 | 3.64 | 2.87 | 2.64 | 2.44 |
| | 5 | 7.56 | 6.99 | 5.86 | 5.10 | 4.52 | 3.87 | 3.05 | 2.79 | 2.57 |
| | 10 | 8.48 | 8.04 | 6.94 | 5.92 | 5.14 | 4.33 | 3.40 | 3.08 | 2.81 |
| | 15 | 9.19 | 8.42 | 7.56 | 6.82 | 5.91 | 4.88 | 3.82 | 3.43 | 3.10 |
| | 20 | 9.89 | 9.03 | 8.44 | 7.98 | 6.90 | 5.51 | 4.35 | 3.85 | 3.44 |
| | 25 | - | - | 9.05 | 8.76 | 7.94 | 6.21 | 5.03 | 4.38 | 3.86 |
| 150% (7.5kW) | -7 | - | - | - | - | - | - | - | - | - |
| | -5 | 5.94 | 5.25 | 4.51 | 4.03 | - | - | - | - | - |
| | -2 | 6.39 | 5.75 | 4.89 | 4.33 | 3.89 | 3.38 | 2.65 | 2.44 | 2.25 |
| | 0 | 6.90 | 6.14 | 5.18 | 4.56 | 4.07 | 3.52 | 2.76 | 2.53 | 2.33 |
| | 2 | 7.49 | 6.58 | 5.50 | 4.81 | 4.27 | 3.67 | 2.87 | 2.62 | 2.41 |
| | 5 | 7.62 | 7.35 | 6.06 | 5.24 | 4.60 | 3.92 | 3.05 | 2.77 | 2.54 |
| | 10 | 9.07 | 8.61 | 7.27 | 6.11 | 5.26 | 4.41 | 3.41 | 3.07 | 2.78 |
| | 15 | 9.68 | 9.24 | 9.00 | 7.13 | 6.11 | 4.99 | 3.85 | 3.42 | 3.07 |
| | 20 | 10.2 | 9.99 | 9.47 | 8.48 | 7.22 | 5.69 | 4.41 | 3.86 | 3.43 |
| | 25 | - | - | 10.3 | 9.54 | 8.12 | 6.43 | 5.13 | 4.42 | 3.86 |
| 100% (5.0kW) | -7 | - | - | - | - | - | - | - | - | - |
| | -5 | 6.31 | 5.41 | 4.60 | 4.08 | 3.67 | 3.19 | 2.47 | 2.26 | 2.08 |
| | -2 | 7.07 | 5.96 | 5.00 | 4.40 | 3.92 | 3.46 | 2.61 | 2.39 | 2.19 |
| | 0 | 7.68 | 6.38 | 5.31 | 4.78 | 4.11 | 3.69 | 2.72 | 2.47 | 2.26 |
| | 2 | 8.40 | 6.87 | 5.66 | 4.98 | 4.32 | 3.77 | 2.83 | 2.57 | 2.34 |
| | 5 | 9.73 | 7.75 | 6.27 | 5.36 | 4.67 | 3.95 | 3.02 | 2.72 | 2.47 |
| | 10 | 10.4 | 8.76 | 7.62 | 6.32 | 5.39 | 4.47 | 3.39 | 3.02 | 2.71 |
| | 15 | 10.8 | 10.3 | 9.12 | 7.65 | 6.33 | 5.11 | 3.84 | 3.39 | 3.01 |
| | 20 | - | - | - | - | - | - | - | - | - |
| | 25 | - | - | - | - | - | - | - | - | - |
| 50% (2.5kW) | -7 | 6.17 | 5.26 | 4.46 | 3.94 | 3.52 | 3.04 | 2.29 | 2.08 | 1.89 |
| | -5 | 6.65 | 5.61 | 4.71 | 4.14 | 3.68 | 3.16 | 2.38 | 2.15 | 1.95 |
| | -2 | 7.52 | 6.22 | 5.15 | 4.48 | 3.95 | 3.37 | 2.53 | 2.27 | 2.05 |
| | 0 | 8.22 | 6.70 | 5.49 | 4.81 | 4.15 | 3.71 | 2.63 | 2.36 | 2.12 |
| | 2 | - | - | - | - | - | 3.80 | 2.75 | 2.45 | 2.20 |
| | 5 | - | - | - | - | - | - | 2.94 | 2.60 | 2.32 |
| | 10 | - | - | - | - | - | - | - | - | - |
| | 15 | - | - | - | - | - | - | - | - | - |
| | 20 | - | - | - | - | - | - | - | - | - |
| | 25 | - | - | - | - | - | - | - | - | - |

With 38% propylene glycol. The pump input value is not included.

## 3.4 Water to Water Heat Pump (WTW)

### ■ EHWT17D-MHEDW

Flow rate

Ambient loop: 19.2 L/min Heating: 12.4 L/min

W10W35

| Capacity | | COP |
|---|---|---|
| % | kW | |
| 100% | 6.5 | 5.7 |
| 75% | 4.8 | 5.9 |
| 50% | 3.2 | 5.7 |
| 25% | 1.6 | 4.2 |

W10W45

| Capacity | | COP |
|---|---|---|
| % | kW | |
| 100% | 6.3 | 4.3 |
| 75% | 4.7 | 4.4 |
| 50% | 3.1 | 4.1 |
| 25% | 1.5 | 2.8 |

W10W55

| Capacity | | COP |
|---|---|---|
| % | kW | |
| 100% | 5.9 | 3.0 |
| 75% | 4.4 | 3.1 |
| 50% | 2.9 | 2.6 |
| 25% | 1.4 | 1.6 |

Ambient loop: 14.4 L/min Heating: 12.4 L/min

W15W35

| Capacity | | COP |
|---|---|---|
| % | kW | |
| 100% | 7.4 | 6.4 |
| 75% | 5.5 | 7.2 |
| 50% | 3.7 | 6.6 |
| 25% | 1.8 | 4.7 |

W15W45

| Capacity | | COP |
|---|---|---|
| % | kW | |
| 100% | 7.1 | 4.8 |
| 75% | 5.3 | 5.2 |
| 50% | 3.5 | 4.5 |
| 25% | 1.7 | 3.1 |

W15W55

| Capacity | | COP |
|---|---|---|
| % | kW | |
| 100% | 6.7 | 3.5 |
| 75% | 5.0 | 3.5 |
| 50% | 3.3 | 2.9 |
| 25% | 1.6 | 1.8 |

Ambient loop: 9.6 L/min Heating: 12.4 L/min

W20W35

| Capacity | | COP |
|---|---|---|
| % | kW | |
| 100% | 7.5 | 6.8 |
| 75% | 5.6 | 7.6 |
| 50% | 3.7 | 7.2 |
| 25% | 1.8 | 6.0 |

W20W45

| Capacity | | COP |
|---|---|---|
| % | kW | |
| 100% | 7.3 | 5.2 |
| 75% | 5.4 | 5.4 |
| 50% | 3.6 | 4.8 |
| 25% | 1.8 | 3.4 |

W20W55

| Capacity | | COP |
|---|---|---|
| % | kW | |
| 100% | 7.0 | 3.8 |
| 75% | 5.2 | 3.7 |
| 50% | 3.5 | 3.2 |
| 25% | 1.7 | 2.2 |

Ambient loop: 9.6 L/min Heating: 12.4 L/min

W25W35

| Capacity | | COP |
|---|---|---|
| % | kW | |
| 100% | 8.3 | 8.4 |
| 75% | 6.2 | 9.3 |
| 50% | 4.1 | 9.2 |
| 25% | 2.0 | 9.1 |

W25W45

| Capacity | | COP |
|---|---|---|
| % | kW | |
| 100% | 8.1 | 5.9 |
| 75% | 6.0 | 6.9 |
| 50% | 4.0 | 6.3 |
| 25% | 2.0 | 4.2 |

W25W55

| Capacity | | COP |
|---|---|---|
| % | kW | |
| 100% | 7.8 | 4.3 |
| 75% | 5.8 | 5.1 |
| 50% | 3.9 | 4.6 |
| 25% | 1.9 | 2.9 |

COP contains the "pump input (Based on EN 14511)"

100%: MAX Capacity

## 3.5 Noise criterion curves

### ■ Cylinder unit

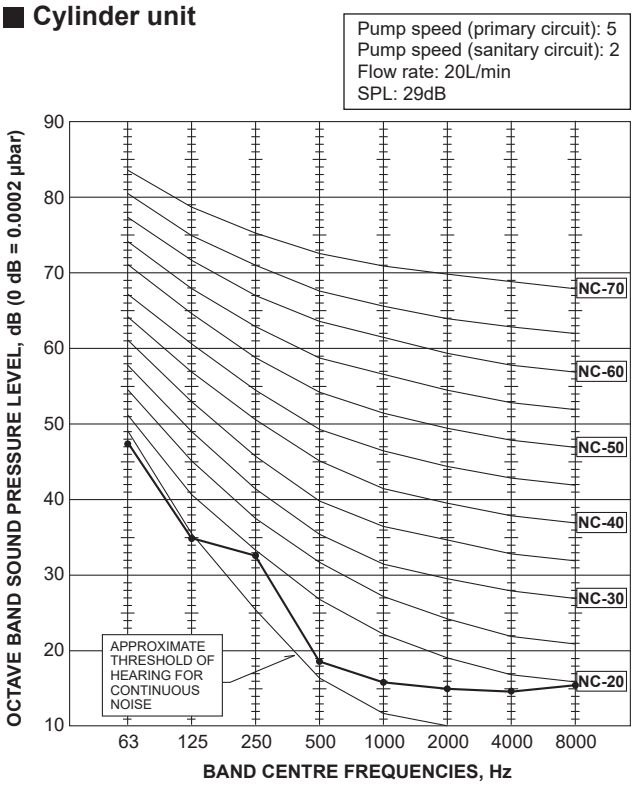


### ■ Hydrobox

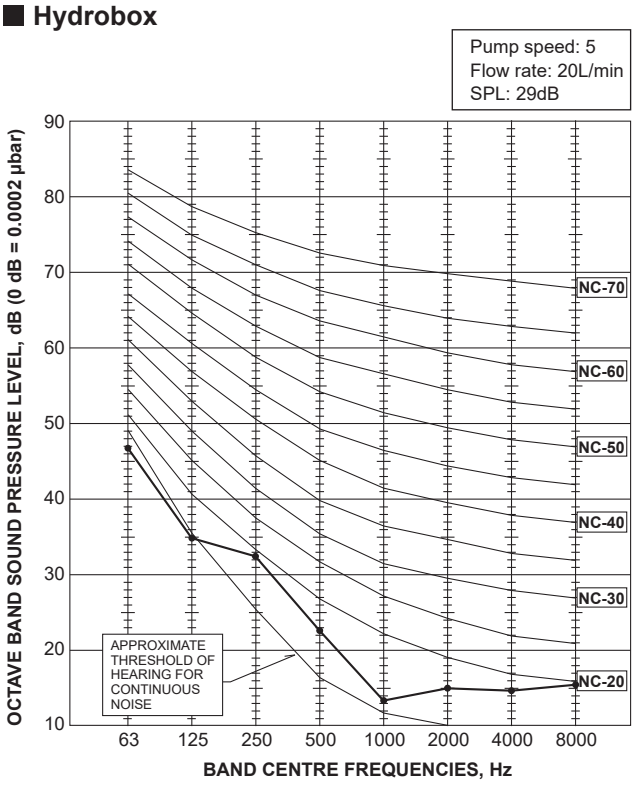


### ■ Ground source heat pump (GSHP)

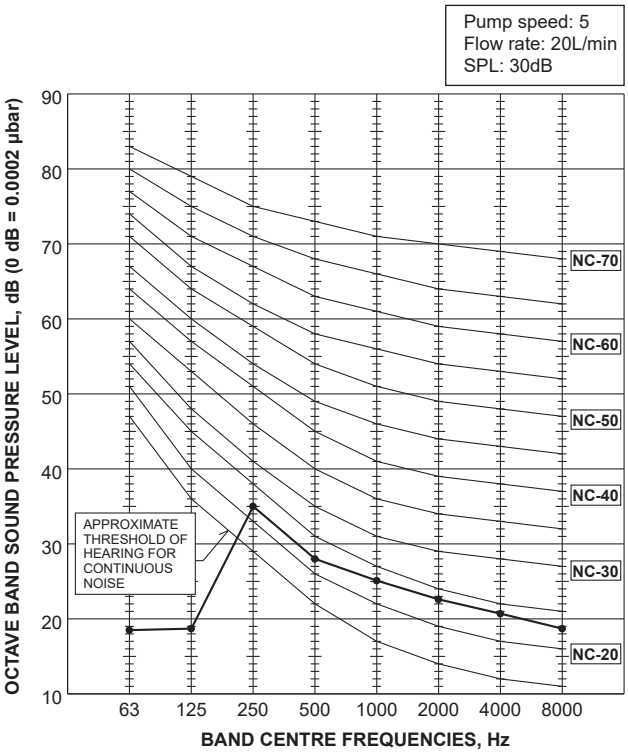


### ■ Cylinder unit
### Ground source heat pump (GSHP)
### Water to Water heat pump (WTW)

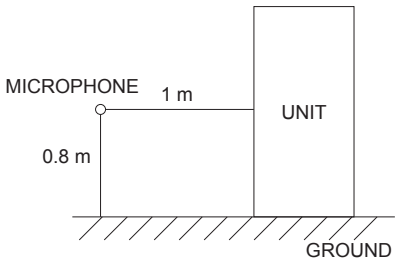


### ■ Hydrobox

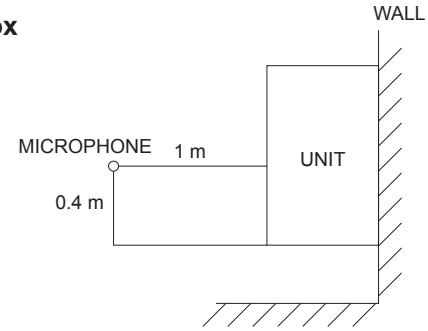

## ■ Water to Water heat pump (WTW)

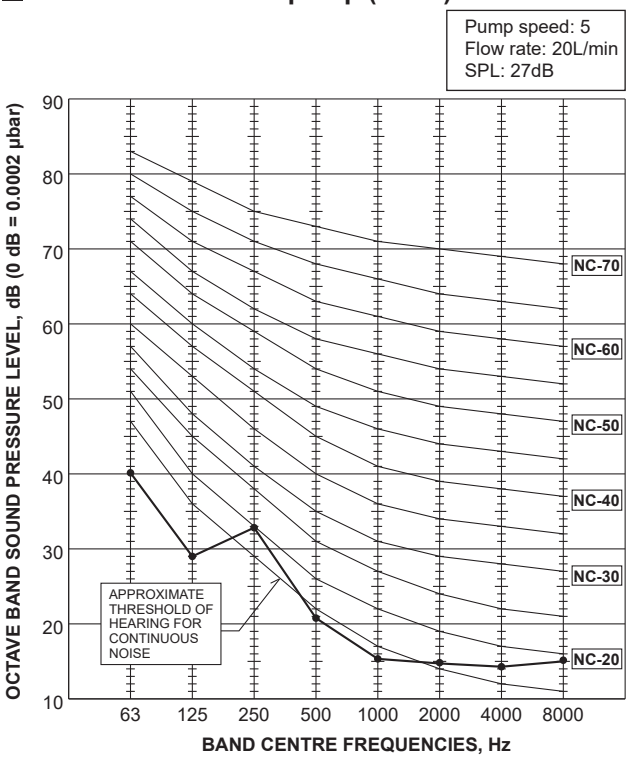

# 4 Cylinder unit

## 4.1 Outlines and dimensions

### ■ Technical Drawings

**<E**T***-*M**D>**

**(Packaged model system)**

**<Unit: mm>**

| DHW tank capacity | 170L | 200L | 300L |
|---|---|---|---|
| ① | 1400 | 1600 | 2050 |

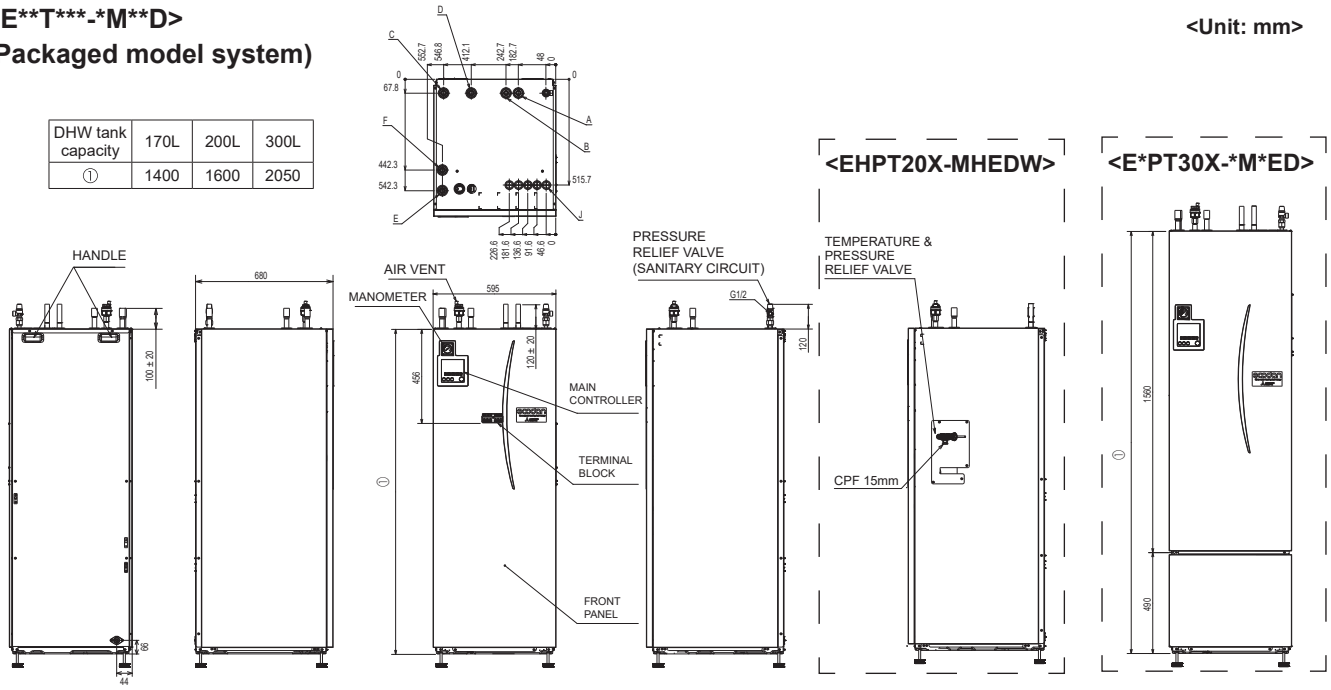


**(Split model system)**

| DHW tank capacity | 170L | 200L | 300L |
|---|---|---|---|
| ① | 1400 | 1600 | 2050 |

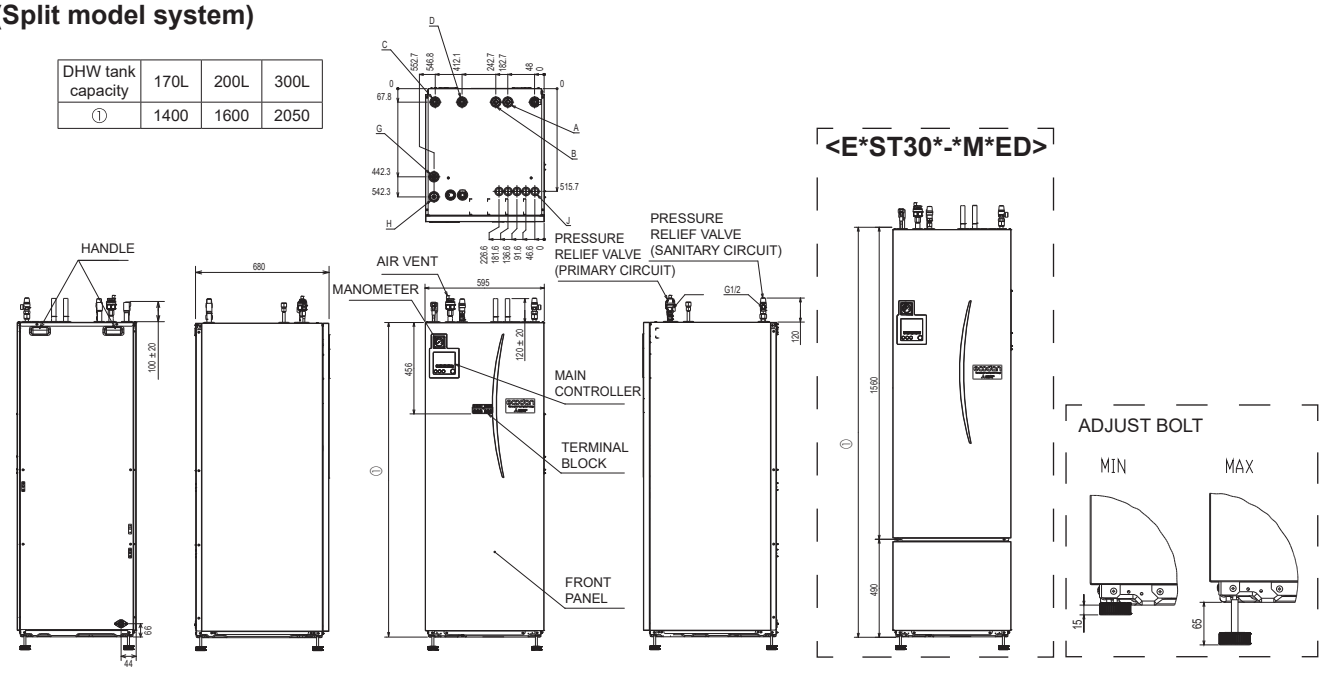


| Letter | Pipe description | Connection size/type | |
|---|---|---|---|
| A | DHW outlet connection | 22 mm/Compression | |
| B | Cold water inlet connection | 22 mm/Compression | |
| C | Space heating/cooling RETURN connection | 28 mm/Compression | |
| D | Space heating/cooling FLOW connection | 28 mm/Compression | |
| E | Flow connection FROM heat pump (No plate heat exchanger) | 28 mm/Compression | |
| F | Return connection TO heat pump (No plate heat exchanger) | 28 mm/Compression | |
| G | Refrigerant (GAS)<br>(With plate heat exchanger) | 12.7 mm/Flare (E*ST**D-*)<br>15.88 mm/Flare (E*ST**C-*) | ⚠ **Warning**<br>• Refrigerant pipes connection shall be accessible for maintenance purposes.<br>• In case of reconnecting the refrigerant pipes after detaching, make the flared part of pipe re-fabricated. |
| H | Refrigerant (LIQUID)<br>(With plate heat exchanger) | 6.35 mm/Flare (E*ST**D-*)<br>9.52 mm/Flare (E*ST**C-*) | |
| J | Electrical cable inlets<br>① ② ③ ④ ⑤ | For inlets ①, ② and ③, run low-voltage wires including external input wires and thermistor wires. For inlets ④ and ⑤, run high-voltage wires including power cable, indoor-outdoor cable, and external output wires.<br>*For a wireless receiver (option) cable and ecodan Wi-Fi interface (option) cable, use inlet ①. | |

<Table 4.1.1>

### (Split model 2 zone system)

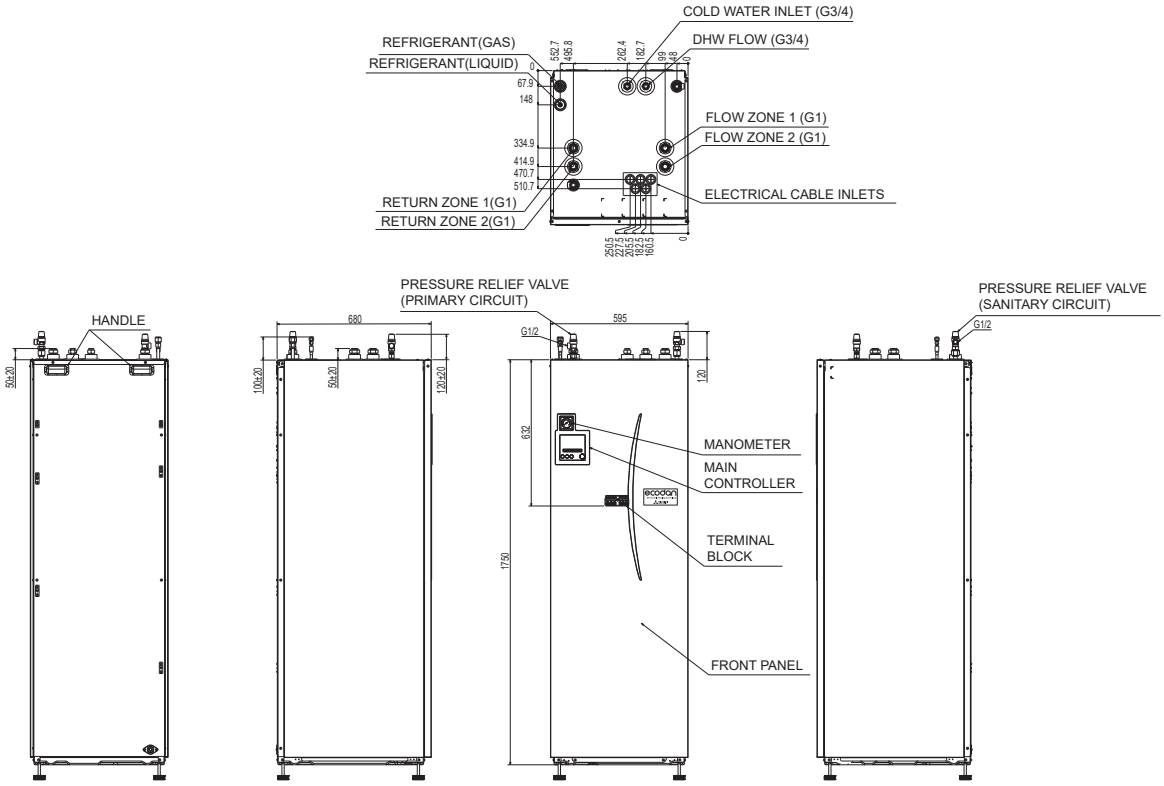


| | | |
|---|---|---|
| Electrical cable inlets | ①②③ ④⑤ | For inlets①, ② and③, run low-voltage wires including external input wires and thermistor wires. For inlets ④ and⑤, run high-voltage wires including power cable, indoor-outdoor cable, and external output wires.<br>*For a wireless receiver (option) cable and ecodan Wi-Fi interface (option) cable, use inlet ①. |

# 4 Cylinder unit

## ■ System configuration

| | Packaged model system | Split model system |
|---|---|---|
| Model name | E*PT**X- | E*ST**D-, E*ST**C- |
| Cylinder unit | 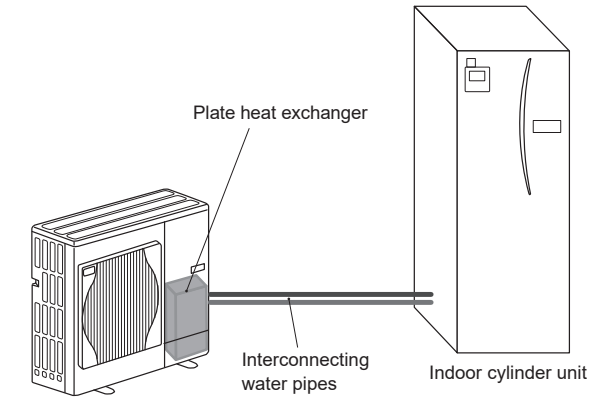 | 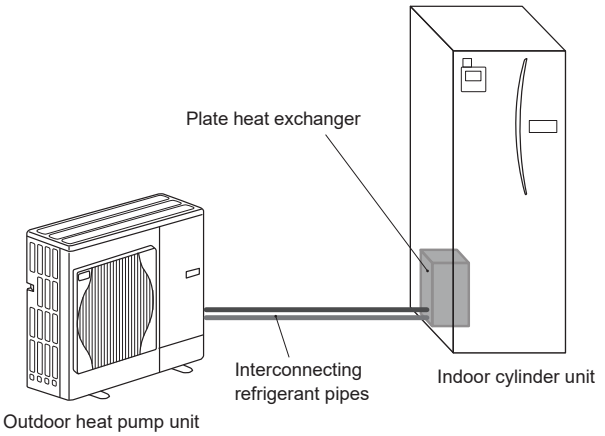 |

## ■ Service access diagrams

| Service access | |
|---|---|
| Parameter | Dimension (mm) |
| a | 300* |
| b | 150 |
| c (distance behind unit not visible in <Figure 4.1.1>) | 10 |
| d | 500 |

Sufficient space MUST be left for the provision of discharge pipework as detailed in National and Local Building Regulations.

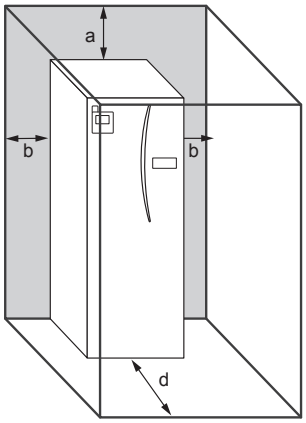


* An additional 300 mm of space (total 600 mm) is required , when installing the optional 2-zone kit (PAC-TZ02-E) on top of the cylinder unit.

<Figure 4.1.1>
Service access

The cylinder unit must be located indoors and in a frost-free environment, for example in a utility room, to minimise heat loss from stored water.

## ■ Indoor unit installation requirements for R32 refrigerant

- If the total refrigerant charge in the system is < 1.84 kg, no additional minimum floor area is required.
- If the total refrigerant charge in the system is ≥ 1.84 kg, minimum floor area requirements are complied according to the below flow chart.
- Charges above 2.4 kg are not allowed in the unit.

Flow chart for indoor unit installation

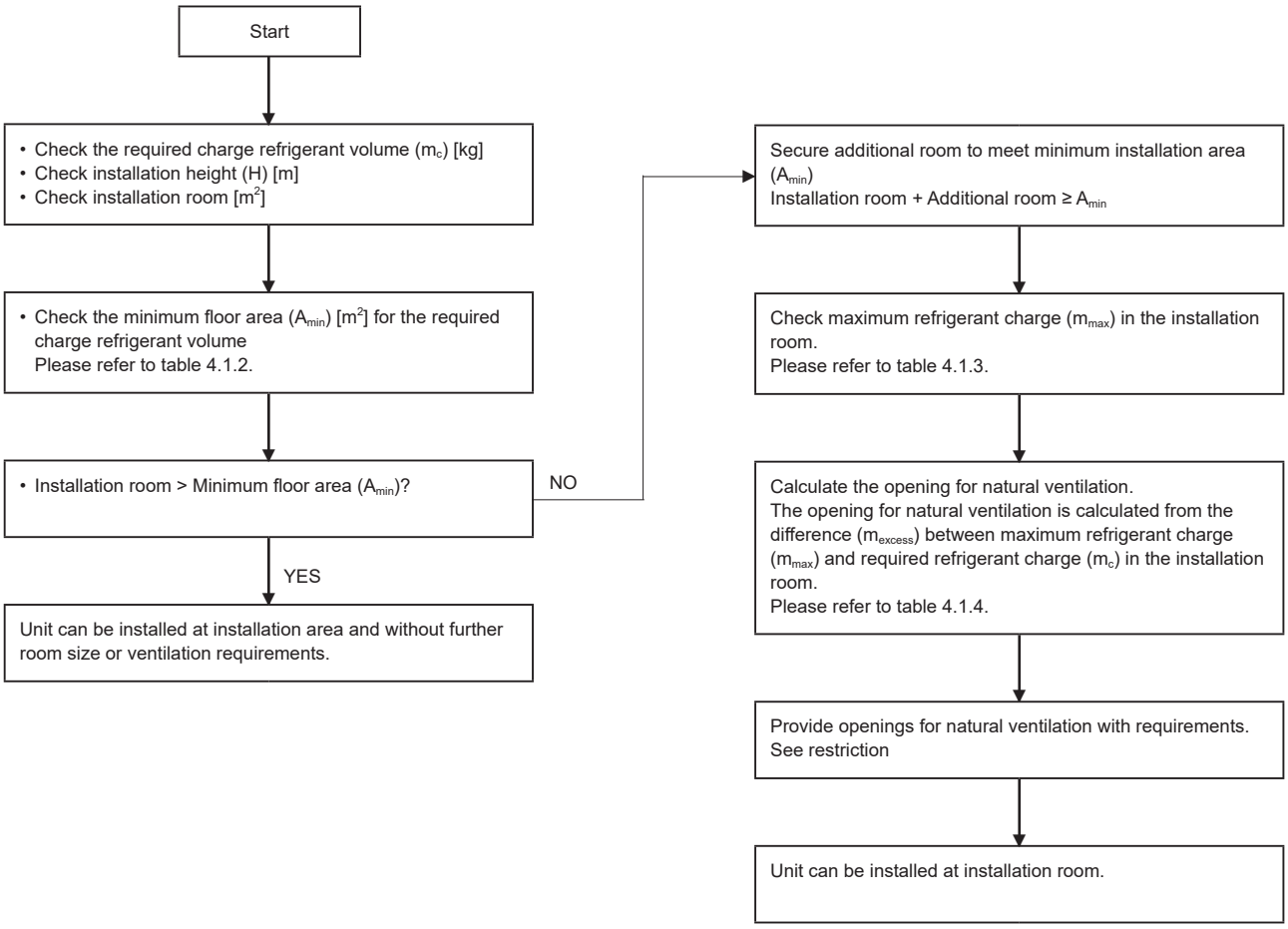


Cylinder unit:

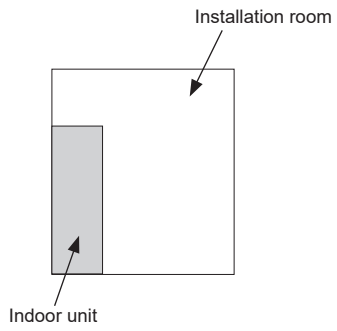


Cylinder unit:
In case of natural ventilation

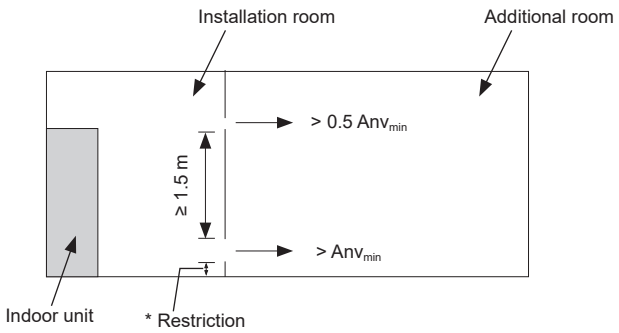


* Restriction for ventilation
When the openings for connected rooms and natural ventilation are required, the following conditions shall be applied.

- The area of any openings above 300 mm from the floor shall not be considered in determining compliance with minimum opening for natural ventilation ($Anv_{min}$).
- At least 50% of the required opening area $Anv_{min}$ shall be below 200 mm from the floor.
- The bottom of the lowest openings shall not be higher than the point of release when the unit is installed and not more than 100 mm from the floor.
- Openings are permanent openings which cannot be closed.
- The height of the openings between the wall and floor which connect the rooms are not less than 20 mm.
- A second higher opening shall be provided. The total size of second opening shall not be less than 50% of minimum opening area for $Anv_{min}$ and shall be at least 1.5 m above the floor.

## ■ Indoor unit installation requirements for R32 refrigerant

Minimum floor area: Indoor unit - Cylinder unit

| $m_c$ [kg] | Minimum floor area ($A_{min}$) [$m^2$] | | | |
|---|---|---|---|---|
| | E*ST17D | E*ST20D | ERST17D-*M*BD | E*ST30D |
| | H = 1400 mm | H = 1600 mm | H = 1600 mm | H = 2050 mm |
| < 1.84 | - | - | - | - |
| 1.84 | 5.8 | 5.0 | 5.0 | 3.9 |
| 1.9 | 5.9 | 5.2 | 5.2 | 4.1 |
| 2.0 | 6.3 | 5.5 | 5.5 | 4.3 |
| 2.1 | 6.9 | 5.8 | 5.8 | 4.5 |
| 2.2 | 7.6 | 6.0 | 6.0 | 4.7 |
| 2.3 | 8.3 | 6.4 | 6.4 | 4.9 |
| 2.4 | 9.0 | 6.9 | 6.9 | 5.1 |

<Table 4.1.2>

- **If the total refrigerant charge in the system is < 1.84 kg, no additional minimum floor area is required.**
- **Charges above 2.4 kg are not allowed in the unit.**
- **For intermediate refrigerant charges, use the row with the higher value. Example: If the refrigerant charge is 2.04 kg, use the row of 2.1 kg.**
- **The value of installation height (H) is considered above value to comply to IEC60335-2-40: 2018**

Maximum refrigerant charge allowed in the room: Cylinder unit

| Installation room [$m^2$] | Maximum refrigerant charge in a room ($m_{max}$) [kg] | | | |
|---|---|---|---|---|
| | E*ST17D | E*ST20D | ERST17D-*M*BD | E*ST30D |
| | H = 1400 mm | H = 1600 mm | H = 1600 mm | H = 2050 mm |
| 1 | 1.83 | 1.83 | 1.83 | 1.83 |
| 2 | 1.83 | 1.83 | 1.83 | 1.83 |
| 3 | 1.83 | 1.83 | 1.83 | 1.83 |
| 4 | 1.83 | 1.83 | 1.83 | 1.88 |
| 5 | 1.83 | 1.84 | 1.84 | 2.36 |
| 6 | 1.93 | 2.21 | 2.21 | 2.4 |
| 7 | 2.11 | 2.4 | 2.4 | 2.4 |
| 8 | 2.26 | 2.4 | 2.4 | 2.4 |
| 9 | 2.39 | 2.4 | 2.4 | 2.4 |
| 10 | 2.4 | 2.4 | 2.4 | 2.4 |

<Table 4.1.3>

- **For intermediate floor areas, use the row with the lower value. Example: If the floor area is 5.4 $m^2$, use the row of 5 $m^2$.**
- **The value of installation height (H) is considered above value to comply to IEC60335-2-40: 2018**

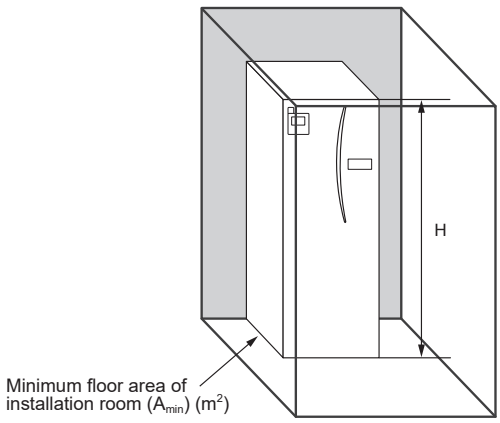


Minimum venting opening area for natural ventilation: Cylinder unit

| $m_c$ [kg] | $m_{max}$ [kg] | $m_{excess}$ [kg] = $m_c$ - $m_{max}$ | Minimum opening for natural ventilation ($Anv_{min}$) [$cm^2$] | | | |
|---|---|---|---|---|---|---|
| | | | E*ST17D | E*ST20D | ERST17D-*M*BD | E*ST30D |
| 2.4 | 1.84 | 0.56 | 149 | 139 | 139 | 123 |
| 2.4 | 1.9 | 0.5 | 133 | 124 | 124 | 110 |
| 2.4 | 2.0 | 0.4 | 107 | 100 | 100 | 88 |
| 2.4 | 2.1 | 0.3 | 82 | 75 | 75 | 66 |
| 2.4 | 2.2 | 0.2 | 56 | 50 | 50 | 44 |
| 2.4 | 2.3 | 0.1 | 29 | 25 | 25 | 22 |

<Table 4.1.4>

- **For intermediate $m_{excess}$ values, the value that corresponds to the higher $m_{excess}$ value from the table is considered.**
  **Example:**
  **$m_{excess}$ = 0.44 kg, the value that corresponds to $m_{excess}$ = 0.5 kg is considered.**
- **The value of installation height (H) is considered above value to comply to IEC60335-2-40: 2018**

## 4.2 Wiring diagrams

### ■ E**T***-VM2(E)D

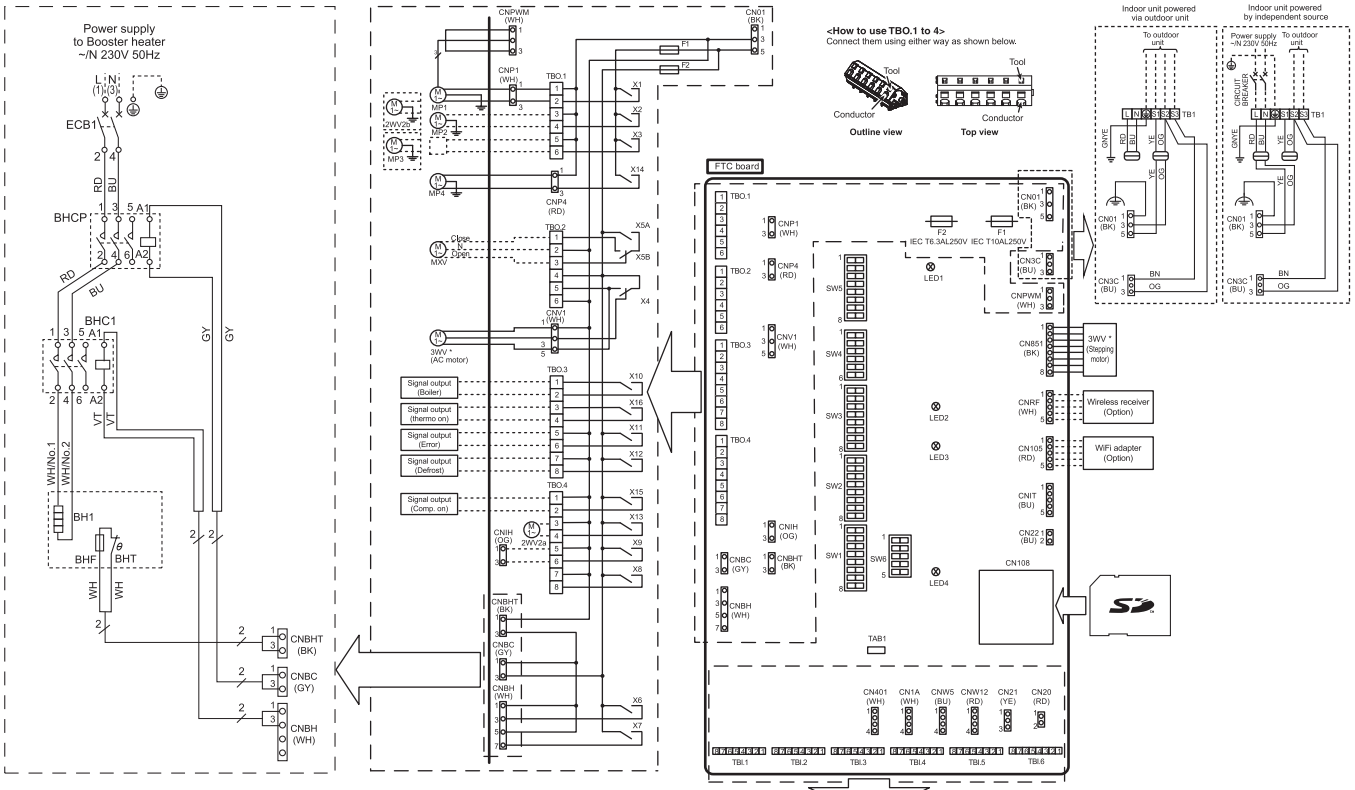


| Symbol | Name |
|---|---|
| TB1 | Terminal block <Power supply, Outdoor unit> |
| ECB1 | Earth leakage circuit breaker for booster heater |
| ECB2 | Earth leakage circuit breaker for immersion heater |
| MP1 | Water circulation pump 1(Space heating and DHW) |
| MP2 | Water circulation pump 2 (Space heating for Zone1)(Local supply) |
| MP3 | Water circulation pump 3 (Space heating for Zone2)(Local supply) |
| MP4 | Water circulation pump 4 (DHW) |
| 3WV | 3-way valve (AC motor) (E*PT20/30X-*M**D*, E*ST**C/30D-*M**D) 3-way valve (Stepping motor) (E*PT17X-*M**D*, E*ST17/20D-*M**D) |
| 2WV2a | 2-way valve (For Zone 1)(Local supply) |
| 2WV2b | 2-way valve (For Zone 2)(Local supply) |
| MXV | Mixing valve (Local supply) |
| IHT | Thermostat (fixed temp.) for immersion heater |
| IH | Immersion heater |
| IHC | Contactor for immersion heater |
| TH1 | Thermistor (Room temp.)(Option) |
| TH2 | Thermistor (Ref. liquid temp.) |
| THW1 | Thermistor (Flow water temp.) |
| THW2 | Thermistor (Return water temp.) |
| THW5A | Thermistor (DHW tank upper water temp.) |
| THW5B | Thermistor (DHW tank lower water temp.) |
| THW6 | Thermistor (Zone1 flow temp.)(Option) |
| THW7 | Thermistor (Zone1 return temp.)(Option) |
| THW8 | Thermistor (Zone2 flow temp.)(Option) |
| THW9 | Thermistor (Zone2 return temp.)(Option) |
| THW10 | Thermistor (Mixing tank temp.)(Option) |
| THWB1 | Thermistor (Boiler flow temp.)(Option) |
| IN1 | Room thermostat 1 (Local supply) |
| IN2 | Flow switch 1 (Local supply) |
| IN3 | Flow switch 2 (Local supply) |
| IN4 | Demand control (Local supply) |
| IN5 | Outdoor thermostat (Local supply) |
| IN6 | Room thermostat 2 (Local supply) |
| IN7 | Flow switch 3 (Local supply) |
| IN8 | Electric energy meter 1 (Local supply) |
| IN9 | Electric energy meter 2 (Local supply) |
| IN10 | Heat meter (Local supply) |
| IN11 | Smart grid ready input (Local supply) |
| IN12 | |
| INA1 | Flow sensor |
| FLOW TEMP. CONTROLLER (FTC) | |
| TBO.1-4 | Terminal block <Outputs> |
| TBI.1-6 | Terminal block <Signal Inputs, Thermistor> |
| F1 | Fuse (IEC T10AL250V) |
| F2 | Fuse (IEC T6.3AL250V) |
| SW1-6 | DIP switch *See Table 3 |
| X1-16 | Relay |
| LED1 | Power supply (FTC) |
| LED2 | Power supply (Main remote controller) |
| LED3 | Communication (FTC-Outdoor unit) |
| LED4 | Reading or writing data to SD card |
| CNPWM | Pump speed control signal for MP1 |
| CN108 | SD card connector |

1. Symbols used in wiring diagram are, ▭ : connector, ▭▭ : terminal block. Function with asterisk (*) may not be available depending on model types.
2. Indoor unit and outdoor unit connecting wires have polarities, make sure to match terminal numbers (S1, S2, S3) for correct wirings.
3. Since the outdoor unit side electric wiring may change, be sure to check the outdoor unit electric wiring diagram for service.
4. Refer to the installation manual for the water circulation diagrams of the models other than shown below.

**Table 1 Signal Inputs**

| Name | Terminal block | Connector | Item | OFF (Open) | ON (Short) |
|---|---|---|---|---|---|
| IN1 | TBI.1 7-8 | — | Room thermostat 1 input *1 | Refer to SW2-1 in <Table 4. 3.1DIP Switch Functions>. | |
| IN2 | TBI.1 5-6 | — | Flow switch 1 input | Refer to SW2-2 in <Table 4. 3.1DIP Switch Functions>. | |
| IN3 | TBI.1 3-4 | — | Flow switch 2 input (Zone1) | Refer to SW3-2 in <Table 4. 3.1DIP Switch Functions>. | |
| IN4 | TBI.1 1-2 | — | Demand control input | Normal | Heat source OFF/ Boiler operation *3 |
| IN5 | TBI.2 7-8 | — | Outdoor thermo-stat input *2 | Standard opera-tion | Heater operation/ Boiler operation *3 |
| IN6 | TBI.2 5-6 | — | Room thermostat 2 input *1 | Refer to SW3-1 in <Table 4. 3.1DIP Switch Functions>. | |
| IN7 | TBI.2 3-4 | — | Flow switch 3 input (Zone2) | Refer to SW3-2 in <Table 4. 3.1DIP Switch Functions>. | |
| IN8 | TBI.3 7-8 | — | Electric energy meter 1 | Refer to installation manual. | |
| IN9 | TBI.3 5-6 | — | Electric energy meter 2 | | |
| IN10 | TBI.2 1-2 | — | Heat meter | | |
| IN11 | TBI.3 3-4 | — | Smart grid ready input | | |
| IN12 | TBI.3 1-2 | — | | | |
| INA1 | TBI.4 1-3 | CN1A | Flow sensor | | |

*1. Set the ON/OFF cycle time of the room thermostat for 10 minutes or more; otherwise the compressor may be damaged.
*2. If using outdoor thermostat for controlling operation of heaters, the lifetime of the heaters and related parts may be reduced.
*3. To turn on the boiler operation, use the main remote controller to select "Boiler" in "External input setting" screen in the service menu.

**Table 2 Outputs**

| Name | Terminal block | Connector | Item | OFF | ON |
|---|---|---|---|---|---|
| OUT1 | TBO.1 1-2 | CNP1 | Water circulation pump 1 output (Space heating/cooling & DHW) | OFF | ON |
| OUT2 | TBO.1 3-4 | — | Water circulation pump 2 output (Space heating/cooling for Zone1) | OFF | ON |
| OUT3 | TBO.1 5-6 | — | Water circulation pump 3 output (Space heating/cooling for Zone2) *1 | OFF | ON |
| | | | 2-way valve 2b output *2 | | |
| OUT4 | TBO.2 4-6 | CNV1 | 3-way valve (2-way valve) output | Heating | DHW |
| | — | CN851 | 3-way valve output | | |
| OUT5 | TBO.2 1-2 | — | Mixing valve output *1 | Stop | Close |
| | TBO.2 2-3 | | | | Open |
| OUT6 | — | CNBH 1-3 | Booster heater 1 output | OFF | ON |
| OUT7 | — | CNBH 5-7 | Booster heater 2 output | OFF | ON |
| OUT8 | TBO.4 7-8 | — | Cooling signal output | OFF | ON |
| OUT9 | TBO.4 5-6 | CNIH | Immersion heater output | OFF | ON |
| OUT10 | TBO.3 1-2 | — | Boiler output | OFF | ON |
| OUT11 | TBO.3 5-6 | — | Error output | Normal | Error |
| OUT12 | TBO.3 7-8 | — | Defrost output | Normal | Defrost |
| OUT13 | TBO.4 3-4 | — | 2-way valve 2a output *2 | OFF | ON |
| OUT14 | — | CNP4 | Water circulation pump 4 output (DHW) | OFF | ON |
| OUT15 | TBO.4 1-2 | — | Comp. ON signal | OFF | ON |
| OUT16 | TBO.3 3-4 | — | Thermo ON signal | OFF | ON |
| OUTA1 | TBI.4 7-8 | — | Analog output | 0V-10V | |

Do not connect to the terminals that are indicated as "—" in the "Terminal block" field.
*1. For 2-zone temperature control.
*2. For 2-zone valve ON/OFF control.

## ■ E**T***-VM6(E)D

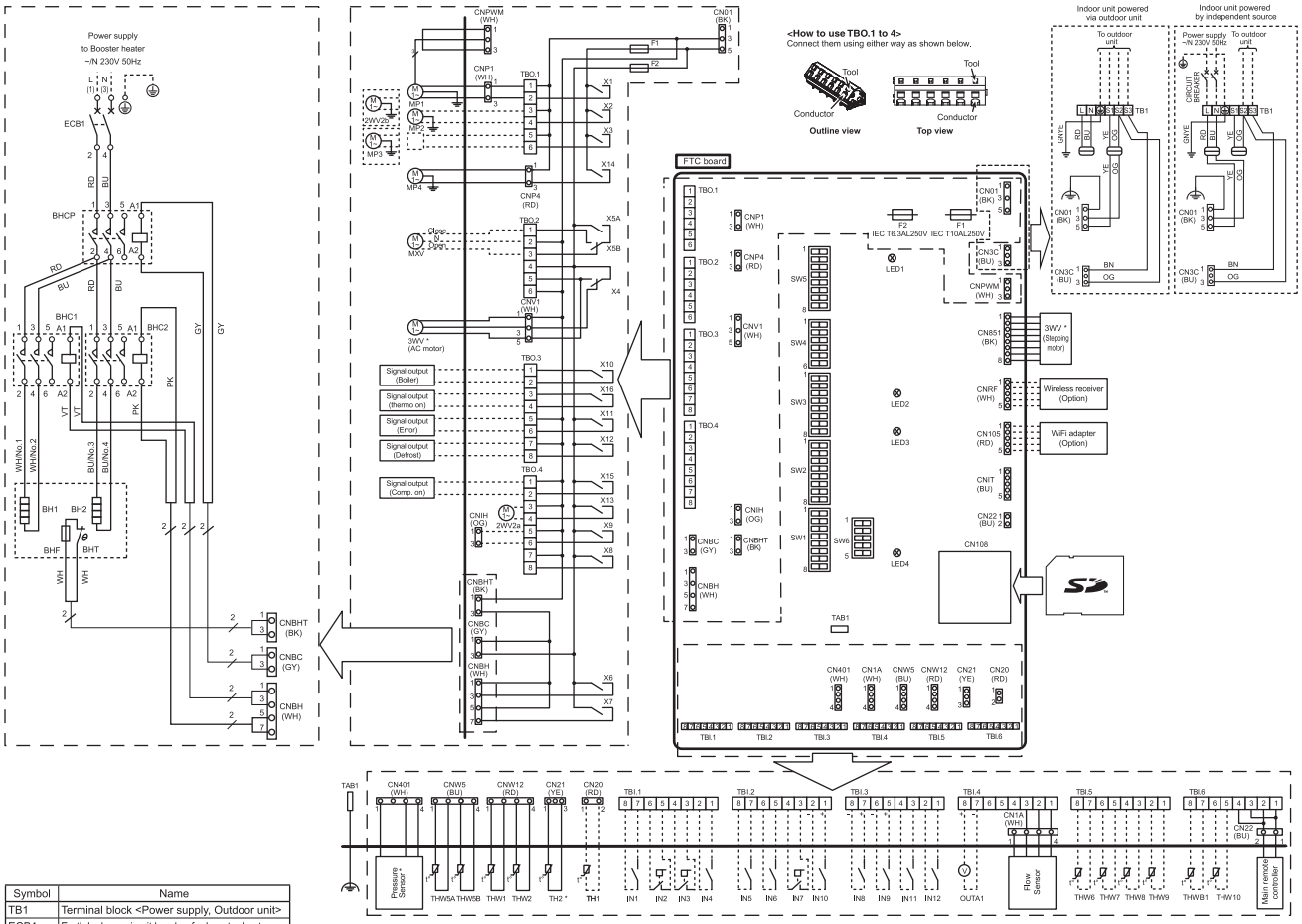


| Symbol | Name |
|---|---|
| TB1 | Terminal block <Power supply, Outdoor unit> |
| ECB1 | Earth leakage circuit breaker for booster heater |
| ECB2 | Earth leakage circuit breaker for immersion heater |
| MP1 | Water circulation pump 1(Space heating and DHW) |
| MP2 | Water circulation pump 2 (Space heating for Zone1)(Local supply) |
| MP3 | Water circulation pump 3 (Space heating for Zone2)(Local supply) |
| MP4 | Water circulation pump 4 (DHW) |
| 3WV | 3-way valve (AC motor) (E*PT20/30X-*M**D*, E*ST**C/30D-*M**D) 3-way valve (Stepping motor) (E*PT17X-*M**D*, E*ST17/20D-*M**D) |
| 2WV2a | 2-way valve (For Zone 1)(Local supply) |
| 2WV2b | 2-way valve (For Zone 2)(Local supply) |
| MXV | Mixing valve (Local supply) |
| IHT | Thermostat (fixed temp.) for immersion heater |
| IH | Immersion heater |
| IHC | Contactor for immersion heater |
| TH1 | Thermistor (Room temp.)(Option) |
| TH2 | Thermistor (Ref. liquid temp.) |
| THW1 | Thermistor (Flow water temp.) |
| THW2 | Thermistor (Return water temp.) |
| THW5A | Thermistor (DHW tank upper water temp.) |
| THW5B | Thermistor (DHW tank lower water temp.) |
| THW6 | Thermistor (Zone1 flow temp.)(Option) |
| THW7 | Thermistor (Zone1 return temp.)(Option) |
| THW8 | Thermistor (Zone2 flow temp.)(Option) |
| THW9 | Thermistor (Zone2 return temp.)(Option) |
| THW10 | Thermistor (Mixing tank temp.)(Option) |
| THWB1 | Thermistor (Boiler flow temp.)(Option) |
| IN1 | Room thermostat 1 (Local supply) |
| IN2 | Flow switch 1 (Local supply) |
| IN3 | Flow switch 2 (Local supply) |
| IN4 | Demand control (Local supply) |
| IN5 | Outdoor thermostat (Local supply) |
| IN6 | Room thermostat 2 (Local supply) |
| IN7 | Flow switch 3 (Local supply) |
| IN8 | Electric energy meter 1 (Local supply) |
| IN9 | Electric energy meter 2 (Local supply) |
| IN10 | Heat meter (Local supply) |
| IN11 | Smart grid ready input (Local supply) |
| IN12 | |
| INA1 | Flow sensor |
| FLOW TEMP. CONTROLLER (FTC) | |
| TBO.1-4 | Terminal block <Outputs> |
| TBI.1-6 | Terminal block <Signal Inputs, Thermistor> |
| F1 | Fuse (IEC T10AL250V) |
| F2 | Fuse (IEC T6.3AL250V) |
| SW1-6 | DIP switch *See Table 3 |
| X1-16 | Relay |
| LED1 | Power supply (FTC) |
| LED2 | Power supply (Main remote controller) |
| LED3 | Communication (FTC-Outdoor unit) |
| LED4 | Reading or writing data to SD card |
| CNPWM | Pump speed control signal for MP1 |
| CN108 | SD card connector |

1. Symbols used in wiring diagram are, ⊡⊡ : connector, ▭▭ : terminal block. Function with asterisk (*) may not be available depending on model types.
2. Indoor unit and outdoor unit connecting wires have polarities, make sure to match terminal numbers (S1, S2, S3) for correct wirings.
3. Since the outdoor unit side electric wiring may change, be sure to check the outdoor unit electric wiring diagram for service.
4. Refer to the installation manual for the water circulation diagrams of the models other than shown below.

**Table 1 Signal Inputs**

| Name | Terminal block | Connector | Item | OFF (Open) | ON (Short) |
|---|---|---|---|---|---|
| IN1 | TBI.1 7-8 | — | Room thermostat 1 input *1 | Refer to SW2-1 in <Table 4.3.1DIP Switch Functions>. | |
| IN2 | TBI.1 5-6 | — | Flow switch 1 input | Refer to SW2-2 in <Table 4.3.1DIP Switch Functions>. | |
| IN3 | TBI.1 3-4 | — | Flow switch 2 input (Zone1) | Refer to SW3-2 in <Table 4.3.1DIP Switch Functions>. | |
| IN4 | TBI.1 1-2 | — | Demand control input | Normal | Heat source OFF/ Boiler operation *3 |
| IN5 | TBI.2 7-8 | — | Outdoor thermo-stat input *2 | Standard opera-tion | Heater operation/ Boiler operation *3 |
| IN6 | TBI.2 5-6 | — | Room thermostat 2 input *1 | Refer to SW3-1 in <Table 4.3.1DIP Switch Functions>. | |
| IN7 | TBI.2 3-4 | — | Flow switch 3 input (Zone2) | Refer to SW3-2 in <Table 4.3.1DIP Switch Functions>. | |
| IN8 | TBI.3 7-8 | — | Electric energy meter 1 | Refer to installation manual. | |
| IN9 | TBI.3 5-6 | — | Electric energy meter 2 | | |
| IN10 | TBI.2 1-2 | — | Heat meter | | |
| IN11 | TBI.3 3-4 | — | Smart grid ready input | | |
| IN12 | TBI.3 1-2 | — | | | |
| INA1 | TBI.4 1-3 | CN1A | Flow sensor | | |

*1. Set the ON/OFF cycle time of the room thermostat for 10 minutes or more; otherwise the compressor may be damaged.
*2. If using outdoor thermostat for controlling operation of heaters, the lifetime of the heaters and related parts may be reduced.
*3. To turn on the boiler operation, use the main remote controller to select "Boiler" in "External input setting" screen in the service menu.

**Table 2 Outputs**

| Name | Terminal block | Connector | Item | OFF | ON |
|---|---|---|---|---|---|
| OUT1 | TBO.1 1-2 | CNP1 | Water circulation pump 1 output (Space heating/cooling & DHW) | OFF | ON |
| OUT2 | TBO.1 3-4 | — | Water circulation pump 2 output (Space heating/cooling for Zone1) | OFF | ON |
| OUT3 | TBO.1 5-6 | — | Water circulation pump 3 output (Space heating/cooling for Zone2) *1 | OFF | ON |
| | | | 2-way valve 2b output *2 | | |
| OUT4 | TBO.2 4-6 | CNV1 | 3-way valve (2-way valve) output | Heating | DHW |
| | — | CN851 | 3-way valve output | | |
| OUT5 | TBO.2 1-2 | — | Mixing valve output *1 | Stop | Close |
| | TBO.2 2-3 | | | | Open |
| OUT6 | — | CNBH 1-3 | Booster heater 1 output | OFF | ON |
| OUT7 | — | CNBH 5-7 | Booster heater 2 output | OFF | ON |
| OUT8 | TBO.4 7-8 | — | Cooling signal output | OFF | ON |
| OUT9 | TBO.4 5-6 | CNIH | Immersion heater output | OFF | ON |
| OUT10 | TBO.3 1-2 | — | Boiler output | OFF | ON |
| OUT11 | TBO.3 5-6 | — | Error output | Normal | Error |
| OUT12 | TBO.3 7-8 | — | Defrost output | Normal | Defrost |
| OUT13 | TBO.4 3-4 | — | 2-way valve 2a output *2 | OFF | ON |
| OUT14 | — | CNP4 | Water circulation pump 4 output (DHW) | OFF | ON |
| OUT15 | TBO.4 1-2 | — | Comp. ON signal | OFF | ON |
| OUT16 | TBO.3 3-4 | — | Thermo ON signal | OFF | ON |
| OUTA1 | TBI.4 7-8 | — | Analog output | 0V-10V | |

Do not connect to the terminals that are indicated as "—" in the "Terminal block" field.
*1. For 2-zone temperature control.
*2. For 2-zone valve ON/OFF control.

## ■ EH*T***-YM9(E)D

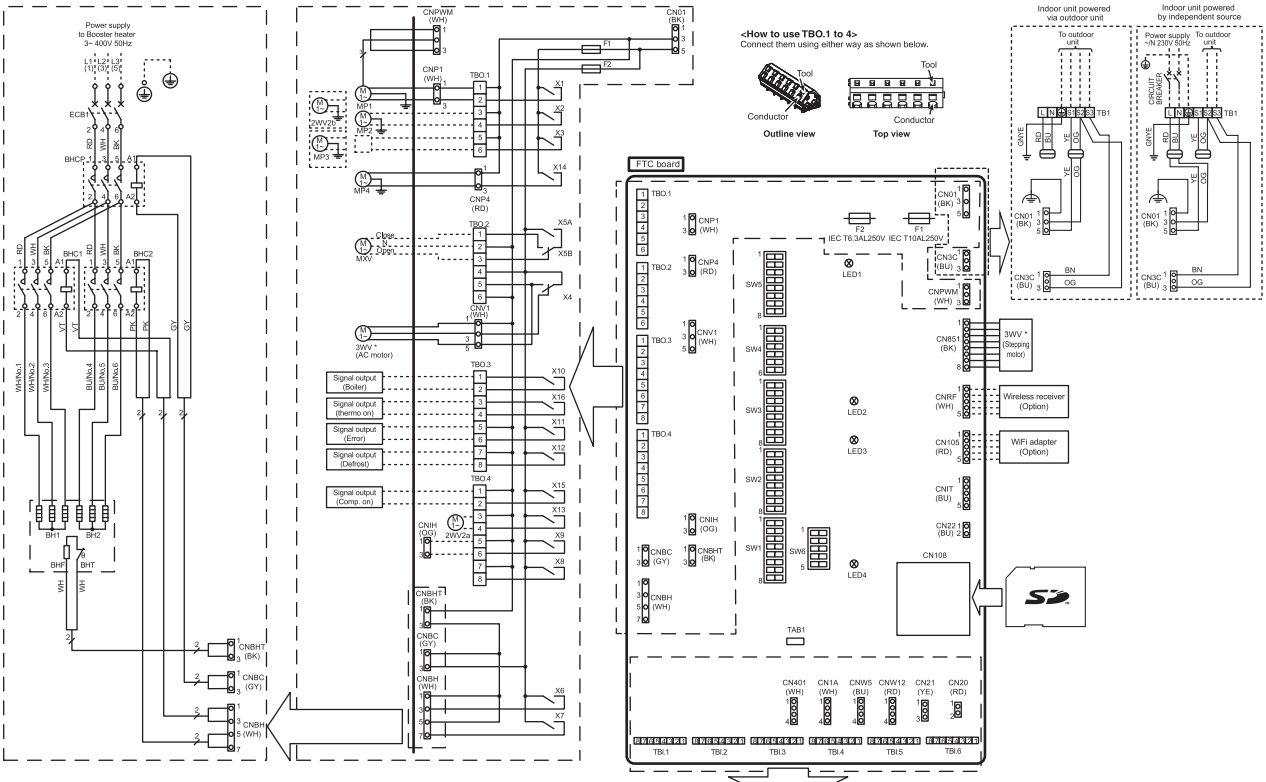


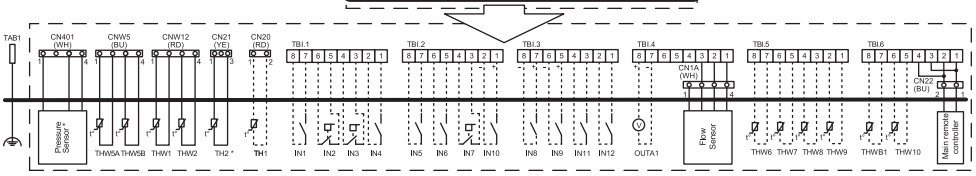


| Symbol | Name |
|---|---|
| TB1 | Terminal block <Power supply, Outdoor unit> |
| ECB1 | Earth leakage circuit breaker for booster heater |
| ECB2 | Earth leakage circuit breaker for immersion heater |
| MP1 | Water circulation pump 1(Space heating and DHW) |
| MP2 | Water circulation pump 2 (Space heating for Zone1)(Local supply) |
| MP3 | Water circulation pump 3 (Space heating for Zone2)(Local supply) |
| MP4 | Water circulation pump 4 (DHW) |
| 3WV | 3-way valve (AC motor) (E*PT20/30X-*M**D*, E*ST**C/30D-*M**D) 3-way valve (Stepping motor) (E*PT17X-*M**D*, E*ST17/20D-*M**D) |
| 2WV2a | 2-way valve (For Zone 1)(Local supply) |
| 2WV2b | 2-way valve (For Zone 2)(Local supply) |
| MXV | Mixing valve (Local supply) |
| IHT | Thermostat (fixed temp.) for immersion heater |
| IH | Immersion heater |
| IHC | Contactor for immersion heater |
| TH1 | Thermistor (Room temp.)(Option) |
| TH2 | Thermistor (Ref. liquid temp.) |
| THW1 | Thermistor (Flow water temp.) |
| THW2 | Thermistor (Return water temp.) |
| THW5A | Thermistor (DHW tank upper water temp.) |
| THW5B | Thermistor (DHW tank lower water temp.) |
| THW6 | Thermistor (Zone1 flow temp.)(Option) |
| THW7 | Thermistor (Zone1 return temp.)(Option) |
| THW8 | Thermistor (Zone2 flow temp.)(Option) |
| THW9 | Thermistor (Zone2 return temp.)(Option) |
| THW10 | Thermistor (Mixing tank temp.)(Option) |
| THWB1 | Thermistor (Boiler flow temp.)(Option) |
| IN1 | Room thermostat 1 (Local supply) |
| IN2 | Flow switch 1 (Local supply) |
| IN3 | Flow switch 2 (Local supply) |
| IN4 | Demand control (Local supply) |
| IN5 | Outdoor thermostat (Local supply) |
| IN6 | Room thermostat 2 (Local supply) |
| IN7 | Flow switch 3 (Local supply) |
| IN8 | Electric energy meter 1 (Local supply) |
| IN9 | Electric energy meter 2 (Local supply) |
| IN10 | Heat meter (Local supply) |
| IN11 | Smart grid ready input (Local supply) |
| IN12 | |
| INA1 | Flow sensor |
| FLOW TEMP. CONTROLLER (FTC) | |
| TBO.1-4 | Terminal block <Outputs> |
| TBI.1-6 | Terminal block <Signal Inputs, Thermistor> |
| F1 | Fuse (IEC T10AL250V) |
| F2 | Fuse (IEC T6.3AL250V) |
| SW1-6 | DIP switch *See Table 3 |
| X1-16 | Relay |
| LED1 | Power supply (FTC) |
| LED2 | Power supply (Main remote controller) |
| LED3 | Communication (FTC-Outdoor unit) |
| LED4 | Reading or writing data to SD card |
| CNPWM | Pump speed control signal for MP1 |
| CN108 | SD card connector |

1. Symbols used in wiring diagram are, ⊡ : connector, ▭ : terminal block. Function with asterisk (*) may not be available depending on model types.
2. Indoor unit and outdoor unit connecting wires have polarities, make sure to match terminal numbers (S1, S2, S3) for correct wirings.
3. Since the outdoor unit side electric wiring may change, be sure to check the outdoor unit electric wiring diagram for service.
4. Refer to the installation manual for the water circulation diagrams of the models other than shown below.

**Table 1 Signal Inputs**

| Name | Terminal block | Connector | Item | OFF (Open) | ON (Short) |
|---|---|---|---|---|---|
| IN1 | TBI.1 7-8 | — | Room thermostat 1 input *1 | Refer to SW2-1 in <Table 4. 3. 1 DIP Switch Functions>. | |
| IN2 | TBI.1 5-6 | — | Flow switch 1 input | Refer to SW2-2 in <Table 4. 3. 1 DIP Switch Functions>. | |
| IN3 | TBI.1 3-4 | — | Flow switch 2 input (Zone1) | Refer to SW3-2 in <Table 4. 3. 1 DIP Switch Functions>. | |
| IN4 | TBI.1 1-2 | — | Demand control input | Normal | Heat source OFF/ Boiler operation *3 |
| IN5 | TBI.2 7-8 | — | Outdoor thermo-stat input *2 | Standard opera-tion | Heater operation/ Boiler operation *3 |
| IN6 | TBI.2 5-6 | — | Room thermostat 2 input *1 | Refer to SW3-1 in <Table 4. 3. 1 DIP Switch Functions>. | |
| IN7 | TBI.2 3-4 | — | Flow switch 3 input (Zone2) | Refer to SW3-2 in <Table 4. 3. 1 DIP Switch Functions>. | |
| IN8 | TBI.3 7-8 | — | Electric energy meter 1 | Refer to installation manual. | |
| IN9 | TBI.3 5-6 | — | Electric energy meter 2 | | |
| IN10 | TBI.2 1-2 | — | Heat meter | | |
| IN11 | TBI.3 3-4 | — | Smart grid ready input | | |
| IN12 | TBI.3 1-2 | — | | | |
| INA1 | TBI.4 1-3 | CN1A | Flow sensor | | |

*1. Set the ON/OFF cycle time of the room thermostat for 10 minutes or more; otherwise the compressor may be damaged.
*2. If using outdoor thermostat for controlling operation of heaters, the lifetime of the heaters and related parts may be reduced.
*3. To turn on the boiler operation, use the main remote controller to select "Boiler" in "External input setting" screen in the service menu.

**Table 2 Outputs**

| Name | Terminal block | Connector | Item | OFF | ON |
|---|---|---|---|---|---|
| OUT1 | TBO.1 1-2 | CNP1 | Water circulation pump 1 output (Space heating/cooling & DHW) | OFF | ON |
| OUT2 | TBO.1 3-4 | — | Water circulation pump 2 output (Space heating/cooling for Zone1) | OFF | ON |
| OUT3 | TBO.1 5-6 | — | Water circulation pump 3 output (Space heating/cooling for Zone2) *1 | OFF | ON |
| | | | 2-way valve 2b output *2 | | |
| OUT4 | TBO.2 4-6 | CNV1 | 3-way valve (2-way valve) output | Heating | DHW |
| | — | CN851 | 3-way valve output | | |
| OUT5 | TBO.2 1-2 | — | Mixing valve output *1 | Stop | Close |
| | TBO.2 2-3 | | | | Open |
| OUT6 | — | CNBH 1-3 | Booster heater 1 output | OFF | ON |
| OUT7 | — | CNBH 5-7 | Booster heater 2 output | OFF | ON |
| OUT8 | TBO.4 7-8 | — | Cooling signal output | OFF | ON |
| OUT9 | TBO.4 5-6 | CNIH | Immersion heater output | OFF | ON |
| OUT10 | TBO.3 1-2 | — | Boiler output | OFF | ON |
| OUT11 | TBO.3 5-6 | — | Error output | Normal | Error |
| OUT12 | TBO.3 7-8 | — | Defrost output | Normal | Defrost |
| OUT13 | TBO.4 3-4 | — | 2-way valve 2a output *2 | OFF | ON |
| OUT14 | — | CNP4 | Water circulation pump 4 output (DHW) | OFF | ON |
| OUT15 | TBO.4 1-2 | — | Comp. ON signal | OFF | ON |
| OUT16 | TBO.3 3-4 | — | Thermo ON signal | OFF | ON |
| OUTA1 | TBI.4 7-8 | — | Analog output | 0V-10V | |

Do not connect to the terminals that are indicated as "—" in the "Terminal block" field.
*1. For 2-zone temperature control.
*2. For 2-zone valve ON/OFF control.

## ■ E**T***-M(E)D

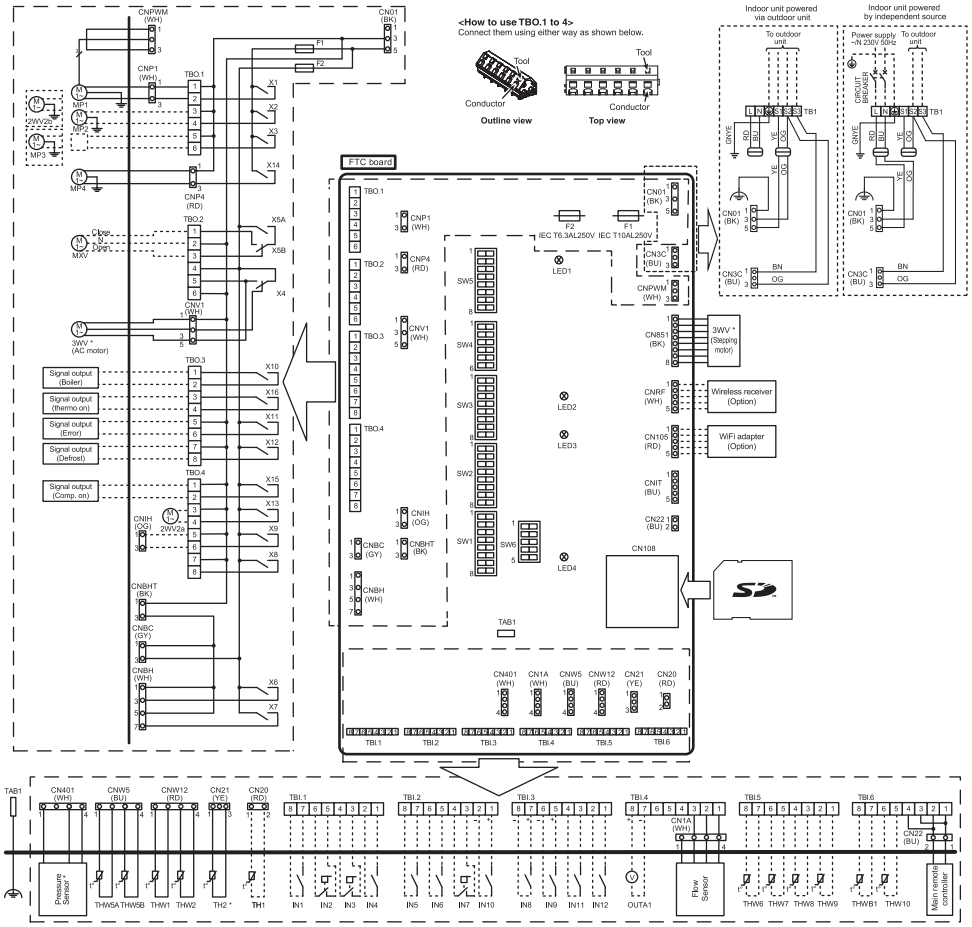


| Symbol | Name |
|---|---|
| TB1 | Terminal block <Power supply, Outdoor unit> |
| ECB1 | Earth leakage circuit breaker for booster heater |
| ECB2 | Earth leakage circuit breaker for immersion heater |
| MP1 | Water circulation pump 1(Space heating and DHW) |
| MP2 | Water circulation pump 2 (Space heating for Zone1)(Local supply) |
| MP3 | Water circulation pump 3 (Space heating for Zone2)(Local supply) |
| MP4 | Water circulation pump 4 (DHW) |
| 3WV | 3-way valve (AC motor) (E*PT20/30X-*M**D*, E*ST**C/30D-*M**D) 3-way valve (Stepping motor) (E*PT17X-*M**D*, E*ST17/20D-*M**D) |
| 2WV2a | 2-way valve (For Zone 1)(Local supply) |
| 2WV2b | 2-way valve (For Zone 2)(Local supply) |
| MXV | Mixing valve (Local supply) |
| IHT | Thermostat (fixed temp.) for immersion heater |
| IH | Immersion heater |
| IHC | Contactor for immersion heater |
| TH1 | Thermistor (Room temp.)(Option) |
| TH2 | Thermistor (Ref. liquid temp.) |
| THW1 | Thermistor (Flow water temp.) |
| THW2 | Thermistor (Return water temp.) |
| THW5A | Thermistor (DHW tank upper water temp.) |
| THW5B | Thermistor (DHW tank lower water temp.) |
| THW6 | Thermistor (Zone1 flow temp.)(Option) |
| THW7 | Thermistor (Zone1 return temp.)(Option) |
| THW8 | Thermistor (Zone2 flow temp.)(Option) |
| THW9 | Thermistor (Zone2 return temp.)(Option) |
| THW10 | Thermistor (Mixing tank temp.)(Option) |
| THWB1 | Thermistor (Boiler flow temp.)(Option) |
| IN1 | Room thermostat 1 (Local supply) |
| IN2 | Flow switch 1 (Local supply) |
| IN3 | Flow switch 2 (Local supply) |
| IN4 | Demand control (Local supply) |
| IN5 | Outdoor thermostat (Local supply) |
| IN6 | Room thermostat 2 (Local supply) |
| IN7 | Flow switch 3 (Local supply) |
| IN8 | Electric energy meter 1 (Local supply) |
| IN9 | Electric energy meter 2 (Local supply) |
| IN10 | Heat meter (Local supply) |
| IN11 | Smart grid ready input (Local supply) |
| IN12 | |
| INA1 | Flow sensor |
| FLOW TEMP. CONTROLLER (FTC) | |
| TBO.1-4 | Terminal block <Outputs> |
| TBI.1-6 | Terminal block <Signal Inputs, Thermistor> |
| F1 | Fuse (IEC T10AL250V) |
| F2 | Fuse (IEC T6.3AL250V) |
| SW1-6 | DIP switch *See Table 3 |
| X1-16 | Relay |
| LED1 | Power supply (FTC) |
| LED2 | Power supply (Main remote controller) |
| LED3 | Communication (FTC-Outdoor unit) |
| LED4 | Reading or writing data to SD card |
| CNPWM | Pump speed control signal for MP1 |
| CN108 | SD card connector |

1. Symbols used in wiring diagram are, ⊙⊙ : connector, ▭▭ : terminal block. Function with asterisk (*) may not be available depending on model types.
2. Indoor unit and outdoor unit connecting wires have polarities, make sure to match terminal numbers (S1, S2, S3) for correct wirings.
3. Since the outdoor unit side electric wiring may change, be sure to check the outdoor unit electric wiring diagram for service.
4. Refer to the installation manual for the water circulation diagrams of the models other than shown below.

**Table 1 Signal Inputs**

| Name | Terminal block | Connector | Item | OFF (Open) | ON (Short) |
|---|---|---|---|---|---|
| IN1 | TBI.1 7-8 | — | Room thermostat 1 input *1 | Refer to SW2-1 in <Table 4.3.1DIP Switch Functions>. | |
| IN2 | TBI.1 5-6 | — | Flow switch 1 input | Refer to SW2-2 in <Table 4.3.1DIP Switch Functions>. | |
| IN3 | TBI.1 3-4 | — | Flow switch 2 input (Zone1) | Refer to SW3-2 in <Table 4.3.1DIP Switch Functions>. | |
| IN4 | TBI.1 1-2 | — | Demand control input | Normal | Heat source OFF/ Boiler operation *3 |
| IN5 | TBI.2 7-8 | — | Outdoor thermo-stat input *2 | Standard opera-tion | Heater operation/ Boiler operation *3 |
| IN6 | TBI.2 5-6 | — | Room thermostat 2 input *1 | Refer to SW3-1 in <Table 4.3.1DIP Switch Functions>. | |
| IN7 | TBI.2 3-4 | — | Flow switch 3 input (Zone2) | Refer to SW3-2 in <Table 4.3.1DIP Switch Functions>. | |
| IN8 | TBI.3 7-8 | — | Electric energy meter 1 | Refer to installation manual. | |
| IN9 | TBI.3 5-6 | — | Electric energy meter 2 | | |
| IN10 | TBI.2 1-2 | — | Heat meter | | |
| IN11 | TBI.3 3-4 | — | Smart grid ready input | | |
| IN12 | TBI.3 1-2 | — | | | |
| INA1 | TBI.4 1-3 | CN1A | Flow sensor | | |

*1. Set the ON/OFF cycle time of the room thermostat for 10 minutes or more; otherwise the compressor may be damaged.
*2. If using outdoor thermostat for controlling operation of heaters, the lifetime of the heaters and related parts may be reduced.
*3. To turn on the boiler operation, use the main remote controller to select "Boiler" in "External input setting" screen in the service menu.

**Table 2 Outputs**

| Name | Terminal block | Connector | Item | OFF | ON |
|---|---|---|---|---|---|
| OUT1 | TBO.1 1-2 | CNP1 | Water circulation pump 1 output (Space heating/cooling & DHW) | OFF | ON |
| OUT2 | TBO.1 3-4 | — | Water circulation pump 2 output (Space heating/cooling for Zone1) | OFF | ON |
| OUT3 | TBO.1 5-6 | — | Water circulation pump 3 output (Space heating/cooling for Zone2) *1 | OFF | ON |
| | | | 2-way valve 2b output *2 | | |
| OUT4 | TBO.2 4-6 | CNV1 | 3-way valve (2-way valve) output | Heating | DHW |
| | — | CN851 | 3-way valve output | | |
| OUT5 | TBO.2 1-2 | — | Mixing valve output *1 | Stop | Close |
| | TBO.2 2-3 | | | | Open |
| OUT6 | — | CNBH 1-3 | Booster heater 1 output | OFF | ON |
| OUT7 | — | CNBH 5-7 | Booster heater 2 output | OFF | ON |
| OUT8 | TBO.4 7-8 | — | Cooling signal output | OFF | ON |
| OUT9 | TBO.4 5-6 | CNIH | Immersion heater output | OFF | ON |
| OUT10 | TBO.3 1-2 | — | Boiler output | OFF | ON |
| OUT11 | TBO.3 5-6 | — | Error output | Normal | Error |
| OUT12 | TBO.3 7-8 | — | Defrost output | Normal | Defrost |
| OUT13 | TBO.4 3-4 | — | 2-way valve 2a output *2 | OFF | ON |
| OUT14 | — | CNP4 | Water circulation pump 4 output (DHW) | OFF | ON |
| OUT15 | TBO.4 1-2 | — | Comp. ON signal | OFF | ON |
| OUT16 | TBO.3 3-4 | — | Thermo ON signal | OFF | ON |
| OUTA1 | TBI.4 7-8 | — | Analog output | 0V-10V | |

Do not connect to the terminals that are indicated as "—" in the "Terminal block" field.
*1. For 2-zone temperature control.
*2. For 2-zone valve ON/OFF control.

## ■ EH*T***-TM9(E)D

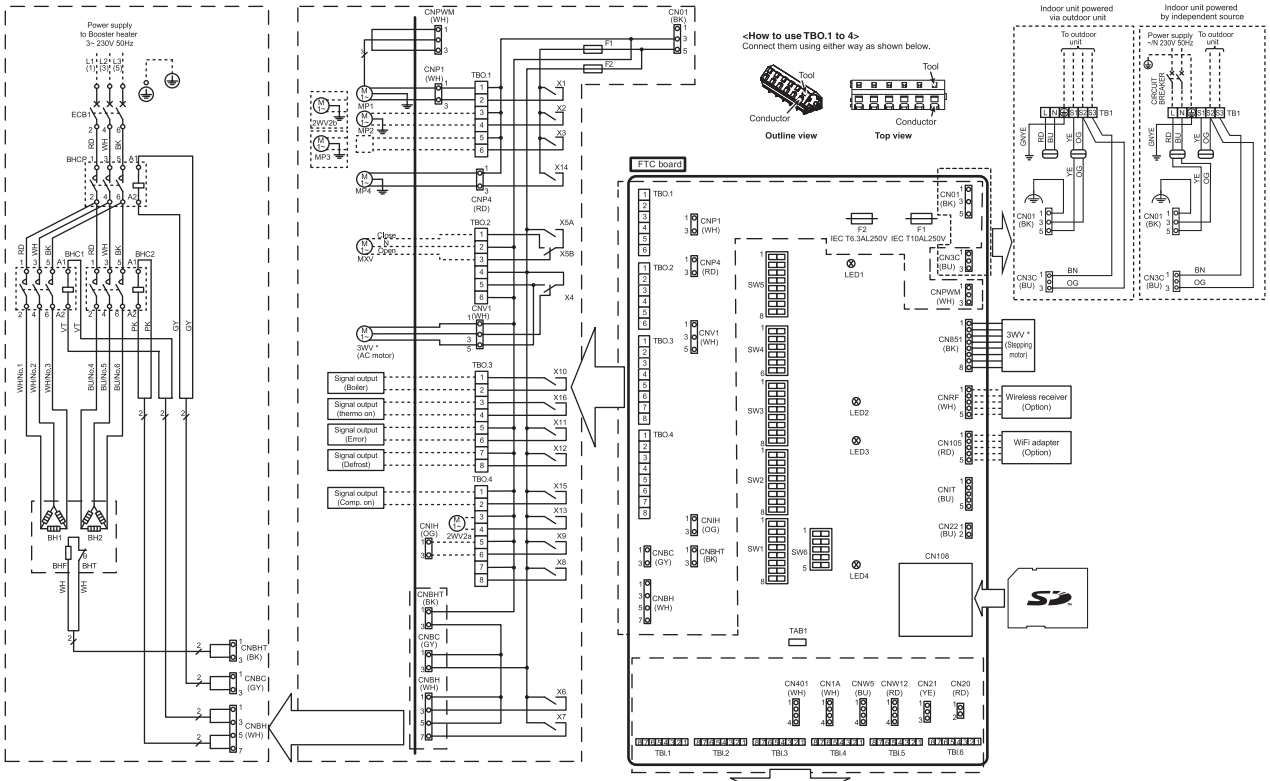


| Symbol | Name |
|---|---|
| TB1 | Terminal block <Power supply, Outdoor unit> |
| ECB1 | Earth leakage circuit breaker for booster heater |
| ECB2 | Earth leakage circuit breaker for immersion heater |
| MP1 | Water circulation pump 1(Space heating and DHW) |
| MP2 | Water circulation pump 2 (Space heating for Zone1)(Local supply) |
| MP3 | Water circulation pump 3 (Space heating for Zone2)(Local supply) |
| MP4 | Water circulation pump 4 (DHW) |
| 3WV | 3-way valve (AC motor) (E*PT20/30X-*M**D*, E*ST**C/30D-*M**D) 3-way valve (Stepping motor) (E*PT17X-*M**D*, E*ST17/20D-*M**D) |
| 2WV2a | 2-way valve (For Zone 1)(Local supply) |
| 2WV2b | 2-way valve (For Zone 2)(Local supply) |
| MXV | Mixing valve (Local supply) |
| IHT | Thermostat (fixed temp.) for immersion heater |
| IH | Immersion heater |
| IHC | Contactor for immersion heater |
| TH1 | Thermistor (Room temp.)(Option) |
| TH2 | Thermistor (Ref. liquid temp.) |
| THW1 | Thermistor (Flow water temp.) |
| THW2 | Thermistor (Return water temp.) |
| THW5A | Thermistor (DHW tank upper water temp.) |
| THW5B | Thermistor (DHW tank lower water temp.) |
| THW6 | Thermistor (Zone1 flow temp.)(Option) |
| THW7 | Thermistor (Zone1 return temp.)(Option) |
| THW8 | Thermistor (Zone2 flow temp.)(Option) |
| THW9 | Thermistor (Zone2 return temp.)(Option) |
| THW10 | Thermistor (Mixing tank temp.)(Option) |
| THWB1 | Thermistor (Boiler flow temp.)(Option) |
| IN1 | Room thermostat 1 (Local supply) |
| IN2 | Flow switch 1 (Local supply) |
| IN3 | Flow switch 2 (Local supply) |
| IN4 | Demand control (Local supply) |
| IN5 | Outdoor thermostat (Local supply) |
| IN6 | Room thermostat 2 (Local supply) |
| IN7 | Flow switch 3 (Local supply) |
| IN8 | Electric energy meter 1 (Local supply) |
| IN9 | Electric energy meter 2 (Local supply) |
| IN10 | Heat meter (Local supply) |
| IN11 | Smart grid ready input (Local supply) |
| IN12 | |
| INA1 | Flow sensor |
| FLOW TEMP. CONTROLLER (FTC) | |
| TBO.1-4 | Terminal block <Outputs> |
| TBI.1-6 | Terminal block <Signal Inputs, Thermistor> |
| F1 | Fuse (IEC T10AL250V) |
| F2 | Fuse (IEC T6.3AL250V) |
| SW1-6 | DIP switch *See Table 3 |
| X1-16 | Relay |
| LED1 | Power supply (FTC) |
| LED2 | Power supply (Main remote controller) |
| LED3 | Communication (FTC-Outdoor unit) |
| LED4 | Reading or writing data to SD card |
| CNPWM | Pump speed control signal for MP1 |
| CN108 | SD card connector |

1. Symbols used in wiring diagram are, ⊡ : connector, ▭ : terminal block. Function with asterisk (*) may not be available depending on model types.
2. Indoor unit and outdoor unit connecting wires have polarities, make sure to match terminal numbers (S1, S2, S3) for correct wirings.
3. Since the outdoor unit side electric wiring may change, be sure to check the outdoor unit electric wiring diagram for service.
4. Refer to the installation manual for the water circulation diagrams of the models other than shown below.

**Table 1 Signal Inputs**

| Name | Terminal block | Connector | Item | OFF (Open) | ON (Short) |
|---|---|---|---|---|---|
| IN1 | TBI.1 7-8 | — | Room thermostat 1 input *1 | Refer to SW2-1 in <Table 4. 3. 1 DIP Switch Functions>. | |
| IN2 | TBI.1 5-6 | — | Flow switch 1 input | Refer to SW2-2 in <Table 4. 3. 1 DIP Switch Functions>. | |
| IN3 | TBI.1 3-4 | — | Flow switch 2 input (Zone1) | Refer to SW3-2 in <Table 4. 3. 1 DIP Switch Functions>. | |
| IN4 | TBI.1 1-2 | — | Demand control input | Normal | Heat source OFF/ Boiler operation *3 |
| IN5 | TBI.2 7-8 | — | Outdoor thermo-stat input *2 | Standard opera-tion | Heater operation/ Boiler operation *3 |
| IN6 | TBI.2 5-6 | — | Room thermostat 2 input *1 | Refer to SW3-1 in <Table 4. 3. 1 DIP Switch Functions>. | |
| IN7 | TBI.2 3-4 | — | Flow switch 3 input (Zone2) | Refer to SW3-2 in <Table 4. 3. 1 DIP Switch Functions>. | |
| IN8 | TBI.3 7-8 | — | Electric energy meter 1 | Refer to installation manual. | |
| IN9 | TBI.3 5-6 | — | Electric energy meter 2 | | |
| IN10 | TBI.2 1-2 | — | Heat meter | | |
| IN11 | TBI.3 3-4 | — | Smart grid ready input | | |
| IN12 | TBI.3 1-2 | — | | | |
| INA1 | TBI.4 1-3 | CN1A | Flow sensor | | |

*1. Set the ON/OFF cycle time of the room thermostat for 10 minutes or more; otherwise the compressor may be damaged.
*2. If using outdoor thermostat for controlling operation of heaters, the lifetime of the heaters and related parts may be reduced.
*3. To turn on the boiler operation, use the main remote controller to select "Boiler" in "External input setting" screen in the service menu.

**Table 2 Outputs**

| Name | Terminal block | Connector | Item | OFF | ON |
|---|---|---|---|---|---|
| OUT1 | TBO.1 1-2 | CNP1 | Water circulation pump 1 output (Space heating/cooling & DHW) | OFF | ON |
| OUT2 | TBO.1 3-4 | — | Water circulation pump 2 output (Space heating/cooling for Zone1) | OFF | ON |
| OUT3 | TBO.1 5-6 | — | Water circulation pump 3 output (Space heating/cooling for Zone2) *1 | OFF | ON |
| | | | 2-way valve 2b output *2 | | |
| OUT4 | TBO.2 4-6 | CNV1 | 3-way valve (2-way valve) output | Heating | DHW |
| | — | CN851 | 3-way valve output | | |
| OUT5 | TBO.2 1-2 | — | Mixing valve output *1 | Stop | Close |
| | TBO.2 2-3 | | | | Open |
| OUT6 | — | CNBH 1-3 | Booster heater 1 output | OFF | ON |
| OUT7 | — | CNBH 5-7 | Booster heater 2 output | OFF | ON |
| OUT8 | TBO.4 7-8 | — | Cooling signal output | OFF | ON |
| OUT9 | TBO.4 5-6 | CNIH | Immersion heater output | OFF | ON |
| OUT10 | TBO.3 1-2 | — | Boiler output | OFF | ON |
| OUT11 | TBO.3 5-6 | — | Error output | Normal | Error |
| OUT12 | TBO.3 7-8 | — | Defrost output | Normal | Defrost |
| OUT13 | TBO.4 3-4 | — | 2-way valve 2a output *2 | OFF | ON |
| OUT14 | — | CNP4 | Water circulation pump 4 output (DHW) | OFF | ON |
| OUT15 | TBO.4 1-2 | — | Comp. ON signal | OFF | ON |
| OUT16 | TBO.3 3-4 | — | Thermo ON signal | OFF | ON |
| OUTA1 | TBI.4 7-8 | — | Analog output | 0V-10V | |

Do not connect to the terminals that are indicated as "—" in the "Terminal block" field.
*1. For 2-zone temperature control.
*2. For 2-zone valve ON/OFF control.

## ■ ER*T***-VM2BD

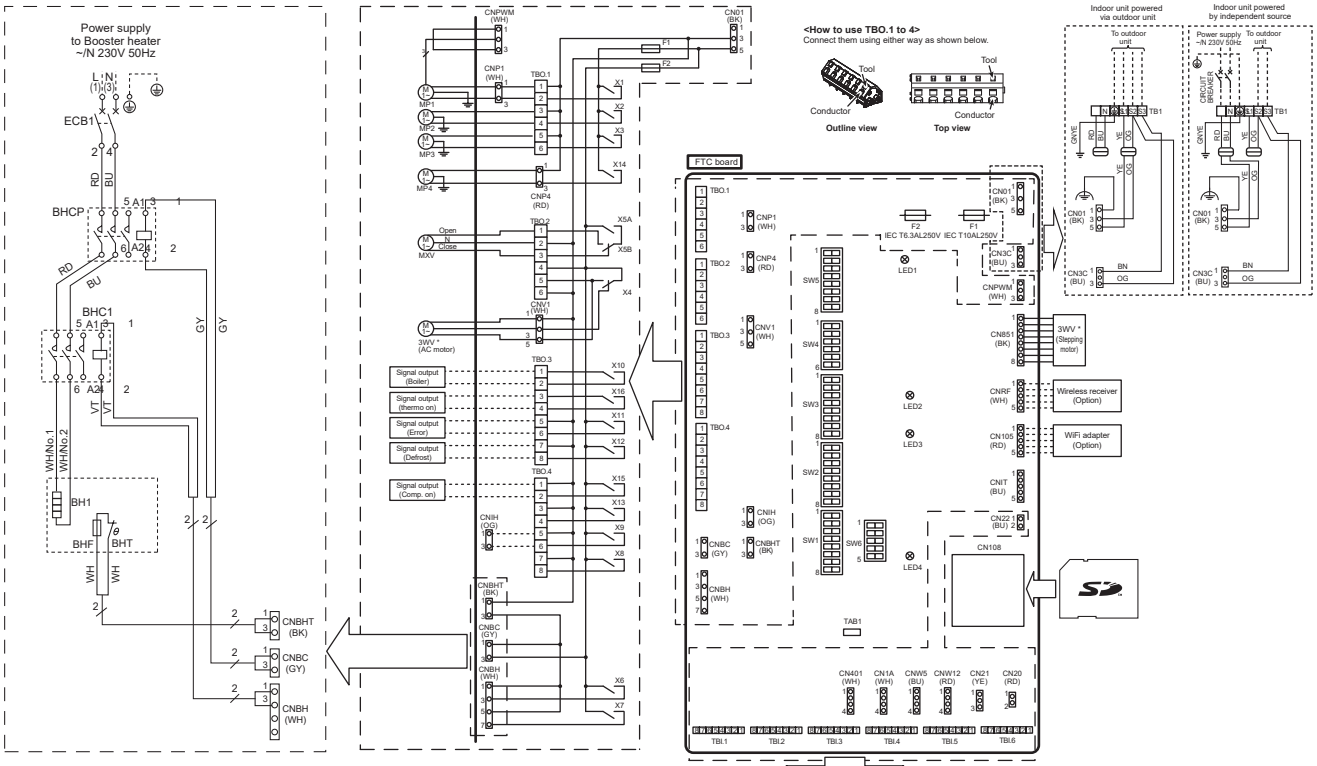


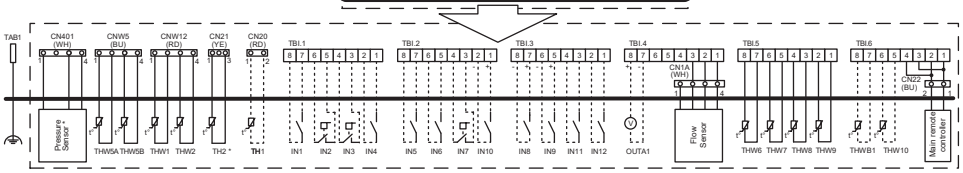


【LEGEND】

| Symbol | Name |
|---|---|
| TB1 | Terminal block <Power supply, Outdoor unit> |
| ECB1 | Earth leakage circuit breaker for booster heater |
| ECB2 | Earth leakage circuit breaker for immersion heater (Option) |
| MP1 | Water circulation pump 1 (Space heating and DHW) |
| MP2 | Water circulation pump 2 (Space heating for Zone1) |
| MP3 | Water circulation pump 3 (Space heating for Zone2) |
| MP4 | Water circulation pump 4 (DHW) |
| 3WV | 3-way valve (AC motor)<br>(E*PT20/30X-*M**D*, E*ST**C/30D-*M**D)<br>3-way valve (Stepping motor)<br>(E*PT17X-*M**D*, E*ST17/20D-*M**D) |
| MXV | Mixing valve |
| IHT | Thermostat (fixed temp.) for immersion heater (Option) |
| IH | Immersion heater (Option) |
| IHC | Contactor for immersion heater (Option) |
| TH1 | Thermistor (Room temp.) (Option) |
| TH2 | Thermistor (Ref. liquid temp.) |
| THW1 | Thermistor (Flow water temp.) |
| THW2 | Thermistor (Return water temp.) |
| THW5A | Thermistor (DHW tank upper water temp.) |
| THW5B | Thermistor (DHW tank lower water temp.) |
| THW6 | Thermistor (Zone1 flow temp.) |
| THW7 | Thermistor (Zone1 return temp.) |
| THW8 | Thermistor (Zone2 flow temp.) |
| THW9 | Thermistor (Zone2 return temp.) |
| THW10 | Thermistor (Mixing tank temp.) (Option) |
| THWB1 | Thermistor (Boiler flow temp.) (Option) |
| IN1 | Room thermostat 1 (Local supply) |
| IN2 | Flow switch 1 (Local supply) |
| IN3 | Flow switch 2 (Local supply) |
| IN4 | Demand control (Local supply) |
| IN5 | Outdoor thermostat (Local supply) |
| IN6 | Room thermostat 2 (Local supply) |
| IN7 | Flow switch 3 (Local supply) |
| IN8 | Electric energy meter 1 (Local supply) |
| IN9 | Electric energy meter 2 (Local supply) |
| IN10 | Heat meter (Local supply) |
| IN11<br>IN12 | Smart grid ready input (Local supply) |
| INA1 | Flow sensor |
| FLOW TEMP. CONTROLLER (FTC) | |
| TBO.1-4 | Terminal block <Outputs> |
| TBI.1-6 | Terminal block <Signal Inputs, Thermistor> |
| F1 | Fuse (IEC T10AL250V) |
| F2 | Fuse (IEC T6.3AL250V) |
| SW1-6 | DIP switch *See Table 3 |
| X1-16 | Relay |
| LED1 | Power supply (FTC) |
| LED2 | Power supply (Main remote controller) |
| LED3 | Communication (FTC-Outdoor unit) |
| LED4 | Reading or writing data to SD card |
| CNPWM | Pump speed control signal for MP1 |
| CN108 | SD card connector |

1. Symbols used in wiring diagram are, ⊙⊙ : connector, ▭▭ : terminal block. Function with asterisk (*) may not be available depending on model types.
2. Indoor unit and outdoor unit connecting wires have polarities, make sure to match terminal numbers (S1, S2, S3) for correct wirings.
3. Since the outdoor unit side electric wiring may change, be sure to check the outdoor unit electric wiring diagram for service.
4. Refer to the installation manual for the water circulation diagrams of the models other than shown below.

**Table 1 Signal Inputs**

| Name | Terminal block | Connector | Item | OFF (Open) | ON (Short) |
|---|---|---|---|---|---|
| IN1 | TBI.1 7-8 | — | Room thermostat 1 input *1 | Refer to SW2-1 in <Table 4.3.1 DIP Switch Functions>. | |
| IN2 | TBI.1 5-6 | — | Flow switch 1 input | Refer to SW2-2 in <Table 4.3.1 DIP Switch Functions>. | |
| IN3 | TBI.1 3-4 | — | Flow switch 2 input (Zone1) | Refer to SW3-2 in <Table 4.3.1 DIP Switch Functions>. | |
| IN4 | TBI.1 1-2 | — | Demand control input | Normal | Heat source OFF/ Boiler operation *3 |
| IN5 | TBI.2 7-8 | — | Outdoor thermo-stat input *2 | Standard opera-tion | Heater operation/ Boiler operation *3 |
| IN6 | TBI.2 5-6 | — | Room thermostat 2 input *1 | Refer to SW3-1 in <Table 4.3.1 DIP Switch Functions>. | |
| IN7 | TBI.2 3-4 | — | Flow switch 3 input (Zone2) | Refer to SW3-2 in <Table 4.3.1 DIP Switch Functions>. | |
| IN8 | TBI.3 7-8 | — | Electric energy meter 1 | Refer to installation manual. | |
| IN9 | TBI.3 5-6 | — | Electric energy meter 2 | | |
| IN10 | TBI.2 1-2 | — | Heat meter | | |
| IN11 | TBI.3 3-4 | — | Smart grid ready input | | |
| IN12 | TBI.3 1-2 | — | | | |
| INA1 | TBI.4 1-3 | CN1A | Flow sensor | | |

*1. Set the ON/OFF cycle time of the room thermostat for 10 minutes or more; otherwise the compressor may be damaged.
*2. If using outdoor thermostat for controlling operation of heaters, the lifetime of the heaters and related parts may be reduced.
*3. To turn on the boiler operation, use the main remote controller to select "Boiler" in "External input setting" screen in the service menu.

**Table 2 Outputs**

| Name | Terminal block | Connector | Item | OFF | ON |
|---|---|---|---|---|---|
| OUT1 | TBO.1 1-2 | CNP1 | Water circulation pump 1 output (Space heating/cooling & DHW) | OFF | ON |
| OUT2 | TBO.1 3-4 | — | Water circulation pump 2 output (Space heating/cooling for Zone1) | OFF | ON |
| OUT3 | TBO.1 5-6 | — | Water circulation pump 3 output (Space heating/cooling for Zone2) *1 | OFF | ON |
| | | | 2-way valve 2b output *2 | | |
| OUT4 | TBO.2 4-6 | CNV1 | 3-way valve (2-way valve) output | Heating | DHW |
| | — | CN851 | 3-way valve output | | |
| OUT5 | TBO.2 1-2 | — | Mixing valve output *1 | Stop | Close |
| | TBO.2 2-3 | | | | Open |
| OUT6 | — | CNBH 1-3 | Booster heater 1 output | OFF | ON |
| OUT7 | — | CNBH 5-7 | Booster heater 2 output | OFF | ON |
| OUT8 | TBO.4 7-8 | — | Cooling signal output | OFF | ON |
| OUT9 | TBO.4 5-6 | CNIH | Immersion heater output | OFF | ON |
| OUT10 | TBO.3 1-2 | — | Boiler output | OFF | ON |
| OUT11 | TBO.3 5-6 | — | Error output | Normal | Error |
| OUT12 | TBO.3 7-8 | — | Defrost output | Normal | Defrost |
| OUT13 | TBO.4 3-4 | — | 2-way valve 2a output *2 | OFF | ON |
| OUT14 | — | CNP4 | Water circulation pump 4 output (DHW) | OFF | ON |
| OUT15 | TBO.4 1-2 | — | Comp. ON signal | OFF | ON |
| OUT16 | TBO.3 3-4 | — | Thermo ON signal | OFF | ON |
| OUTA1 | TBI.4 7-8 | — | Analog output | 0V-10V | |

Do not connect to the terminals that are indicated as "—" in the "Terminal block" field.
*1. For 2-zone temperature control. *2. For 2-zone valve ON/OFF control.

## ■ ER*T***-VM6BD

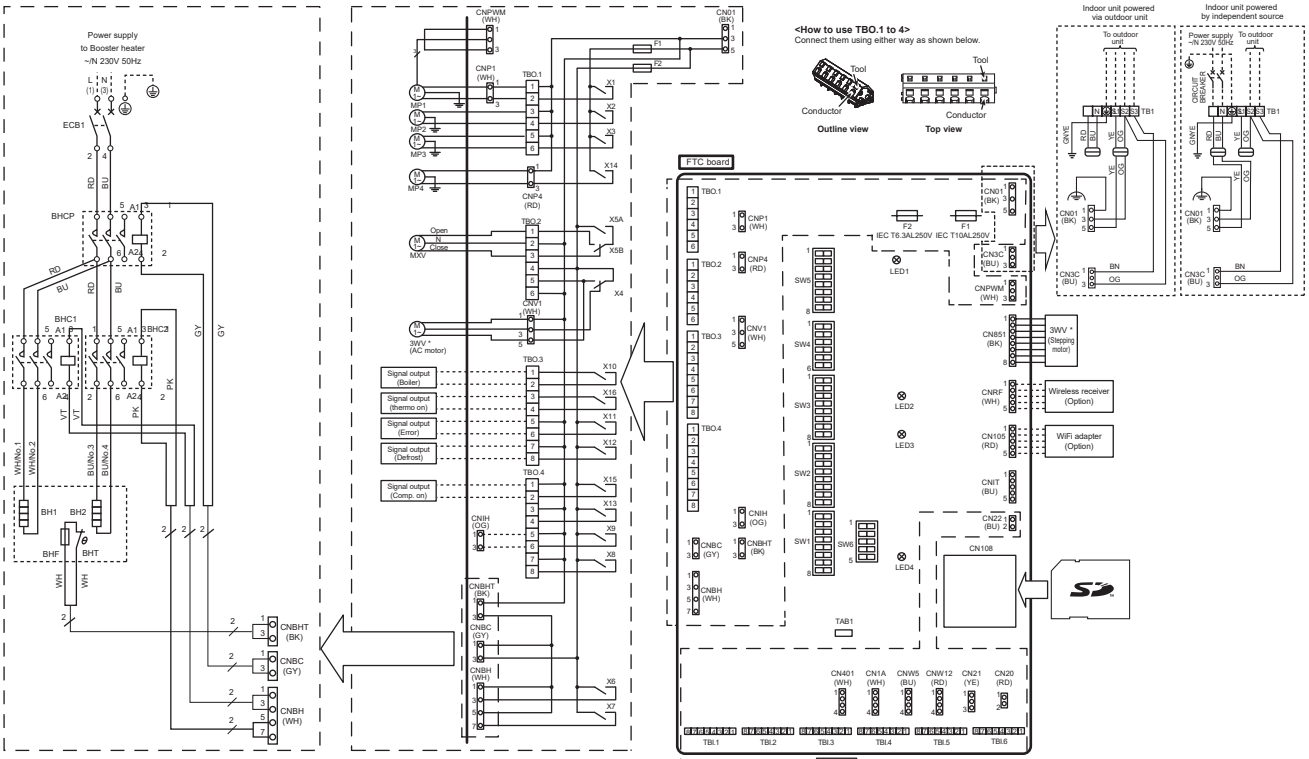


【LEGEND】

| Symbol | Name |
|---|---|
| TB1 | Terminal block <Power supply, Outdoor unit> |
| ECB1 | Earth leakage circuit breaker for booster heater |
| ECB2 | Earth leakage circuit breaker for immersion heater (Option) |
| MP1 | Water circulation pump 1 (Space heating and DHW) |
| MP2 | Water circulation pump 2 (Space heating for Zone1) |
| MP3 | Water circulation pump 3 (Space heating for Zone2) |
| MP4 | Water circulation pump 4 (DHW) |
| 3WV | 3-way valve (AC motor)<br>(E*PT20/30X-*M**D*, E*ST**C/30D-*M**D)<br>3-way valve (Stepping motor)<br>(E*PT17X-*M**D*, E*ST17/20D-*M**D) |
| MXV | Mixing valve |
| IHT | Thermostat (fixed temp.) for immersion heater (Option) |
| IH | Immersion heater (Option) |
| IHC | Contactor for immersion heater (Option) |
| TH1 | Thermistor (Room temp.) (Option) |
| TH2 | Thermistor (Ref. liquid temp.) |
| THW1 | Thermistor (Flow water temp.) |
| THW2 | Thermistor (Return water temp.) |
| THW5A | Thermistor (DHW tank upper water temp.) |
| THW5B | Thermistor (DHW tank lower water temp.) |
| THW6 | Thermistor (Zone1 flow temp.) |
| THW7 | Thermistor (Zone1 return temp.) |
| THW8 | Thermistor (Zone2 flow temp.) |
| THW9 | Thermistor (Zone2 return temp.) |
| THW10 | Thermistor (Mixing tank temp.) (Option) |
| THWB1 | Thermistor (Boiler flow temp.) (Option) |
| IN1 | Room thermostat 1 (Local supply) |
| IN2 | Flow switch 1 (Local supply) |
| IN3 | Flow switch 2 (Local supply) |
| IN4 | Demand control (Local supply) |
| IN5 | Outdoor thermostat (Local supply) |
| IN6 | Room thermostat 2 (Local supply) |
| IN7 | Flow switch 3 (Local supply) |
| IN8 | Electric energy meter 1 (Local supply) |
| IN9 | Electric energy meter 2 (Local supply) |
| IN10 | Heat meter (Local supply) |
| IN11<br>IN12 | Smart grid ready input (Local supply) |
| INA1 | Flow sensor |
| FLOW TEMP. CONTROLLER (FTC) | |
| TBO.1-4 | Terminal block <Outputs> |
| TBI.1-6 | Terminal block <Signal Inputs, Thermistor> |
| F1 | Fuse (IEC T10AL250V) |
| F2 | Fuse (IEC T6.3AL250V) |
| SW1-6 | DIP switch *See Table 3 |
| X1-16 | Relay |
| LED1 | Power supply (FTC) |
| LED2 | Power supply (Main remote controller) |
| LED3 | Communication (FTC-Outdoor unit) |
| LED4 | Reading or writing data to SD card |
| CNPWM | Pump speed control signal for MP1 |
| CN108 | SD card connector |

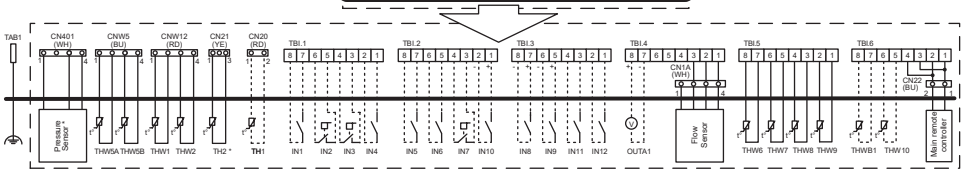


1. Symbols used in wiring diagram are, ⊡⊡ : connector, ▭▭ : terminal block. Function with asterisk (*) may not be available depending on model types.
2. Indoor unit and outdoor unit connecting wires have polarities, make sure to match terminal numbers (S1, S2, S3) for correct wirings.
3. Since the outdoor unit side electric wiring may change, be sure to check the outdoor unit electric wiring diagram for service.
4. Refer to the installation manual for the water circulation diagrams of the models other than shown below.

**Table 1 Signal Inputs**

| Name | Terminal block | Connector | Item | OFF (Open) | ON (Short) |
|---|---|---|---|---|---|
| IN1 | TBI.1 7-8 | — | Room thermostat 1 input *1 | Refer to SW2-1 in <Table 4.3.1 DIP Switch Functions>. | |
| IN2 | TBI.1 5-6 | — | Flow switch 1 input | Refer to SW2-2 in <Table 4.3.1 DIP Switch Functions>. | |
| IN3 | TBI.1 3-4 | — | Flow switch 2 input (Zone1) | Refer to SW3-2 in <Table 4.3.1 DIP Switch Functions>. | |
| IN4 | TBI.1 1-2 | — | Demand control input | Normal | Heat source OFF/ Boiler operation *3 |
| IN5 | TBI.2 7-8 | — | Outdoor thermo-stat input *2 | Standard opera-tion | Heater operation/ Boiler operation *3 |
| IN6 | TBI.2 5-6 | — | Room thermostat 2 input *1 | Refer to SW3-1 in <Table 4.3.1 DIP Switch Functions>. | |
| IN7 | TBI.2 3-4 | — | Flow switch 3 input (Zone2) | Refer to SW3-2 in <Table 4.3.1 DIP Switch Functions>. | |
| IN8 | TBI.3 7-8 | — | Electric energy meter 1 | Refer to installation manual. | |
| IN9 | TBI.3 5-6 | — | Electric energy meter 2 | | |
| IN10 | TBI.2 1-2 | — | Heat meter | | |
| IN11 | TBI.3 3-4 | — | Smart grid ready input | | |
| IN12 | TBI.3 1-2 | — | | | |
| INA1 | TBI.4 1-3 | CN1A | Flow sensor | | |

*1. Set the ON/OFF cycle time of the room thermostat for 10 minutes or more; otherwise the compressor may be damaged.
*2. If using outdoor thermostat for controlling operation of heaters, the lifetime of the heaters and related parts may be reduced.
*3. To turn on the boiler operation, use the main remote controller to select "Boiler" in "External input setting" screen in the service menu.

**Table 2 Outputs**

| Name | Terminal block | Connector | Item | OFF | ON |
|---|---|---|---|---|---|
| OUT1 | TBO.1 1-2 | CNP1 | Water circulation pump 1 output (Space heating/cooling & DHW) | OFF | ON |
| OUT2 | TBO.1 3-4 | — | Water circulation pump 2 output (Space heating/cooling for Zone1) | OFF | ON |
| OUT3 | TBO.1 5-6 | — | Water circulation pump 3 output (Space heating/cooling for Zone2) *1<br>2-way valve 2b output *2 | OFF | ON |
| OUT4 | TBO.2 4-6 | CNV1 | 3-way valve (2-way valve) output | Heating | DHW |
| | — | CN851 | 3-way valve output | | |
| OUT5 | TBO.2 1-2<br>TBO.2 2-3 | — | Mixing valve output *1 | Stop | Close<br>Open |
| OUT6 | — | CNBH 1-3 | Booster heater 1 output | OFF | ON |
| OUT7 | — | CNBH 5-7 | Booster heater 2 output | OFF | ON |
| OUT8 | TBO.4 7-8 | — | Cooling signal output | OFF | ON |
| OUT9 | TBO.4 5-6 | CNIH | Immersion heater output | OFF | ON |
| OUT10 | TBO.3 1-2 | — | Boiler output | OFF | ON |
| OUT11 | TBO.3 5-6 | — | Error output | Normal | Error |
| OUT12 | TBO.3 7-8 | — | Defrost output | Normal | Defrost |
| OUT13 | TBO.4 3-4 | — | 2-way valve 2a output *2 | OFF | ON |
| OUT14 | — | CNP4 | Water circulation pump 4 output (DHW) | OFF | ON |
| OUT15 | TBO.4 1-2 | — | Comp. ON signal | OFF | ON |
| OUT16 | TBO.3 3-4 | — | Thermo ON signal | OFF | ON |
| OUTA1 | TBI.4 7-8 | — | Analog output | 0V-10V | |

Do not connect to the terminals that are indicated as "—" in the "Terminal block" field.
*1. For 2-zone temperature control. *2. For 2-zone valve ON/OFF control.

## ■ ER*T***-YM9BD

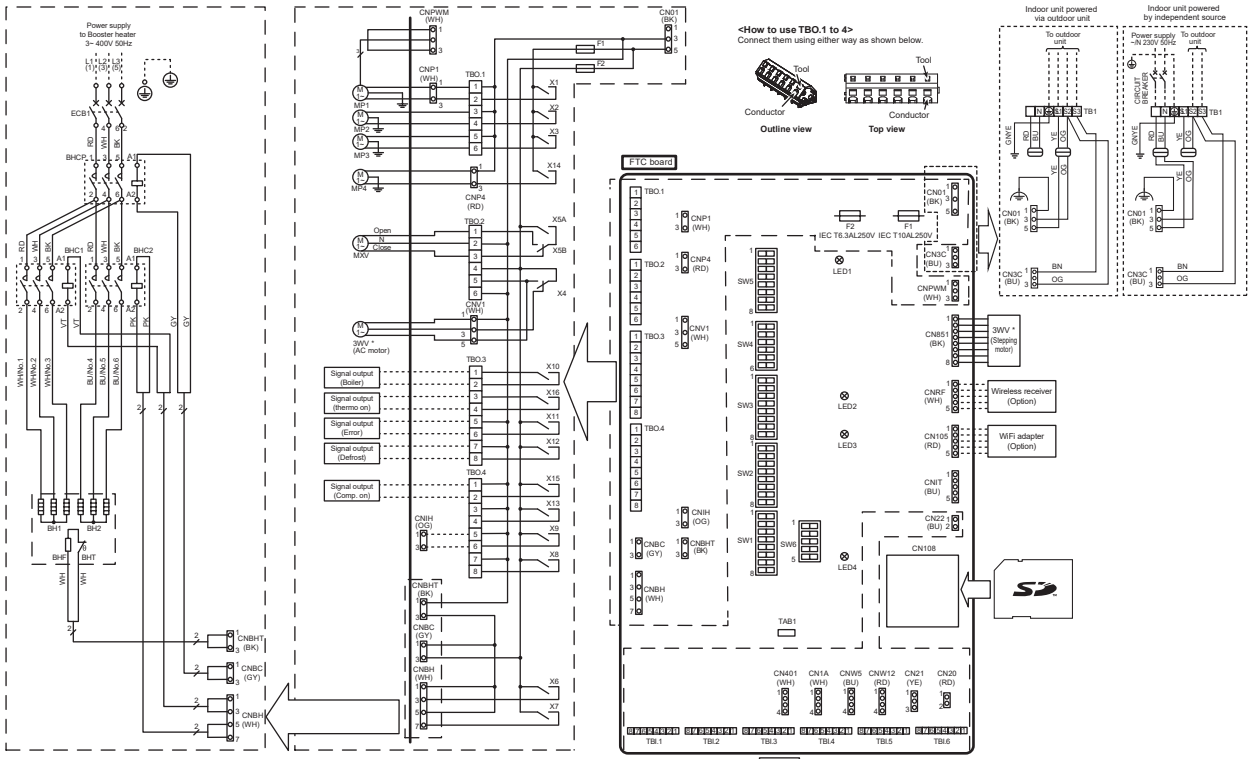


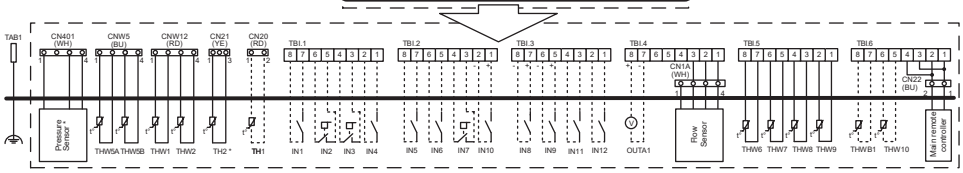


【LEGEND】

| Symbol | Name |
|---|---|
| TB1 | Terminal block <Power supply, Outdoor unit> |
| ECB1 | Earth leakage circuit breaker for booster heater |
| ECB2 | Earth leakage circuit breaker for immersion heater (Option) |
| MP1 | Water circulation pump 1 (Space heating and DHW) |
| MP2 | Water circulation pump 2 (Space heating for Zone1) |
| MP3 | Water circulation pump 3 (Space heating for Zone2) |
| MP4 | Water circulation pump 4 (DHW) |
| 3WV | 3-way valve (AC motor) (E*PT20/30X-*M**D*, E*ST**C/30D-*M**D) 3-way valve (Stepping motor) (E*PT17X-*M**D*, E*ST17/20D-*M**D) |
| MXV | Mixing valve |
| IHT | Thermostat (fixed temp.) for immersion heater (Option) |
| IH | Immersion heater (Option) |
| IHC | Contactor for immersion heater (Option) |
| TH1 | Thermistor (Room temp.) (Option) |
| TH2 | Thermistor (Ref. liquid temp.) |
| THW1 | Thermistor (Flow water temp.) |
| THW2 | Thermistor (Return water temp.) |
| THW5A | Thermistor (DHW tank upper water temp.) |
| THW5B | Thermistor (DHW tank lower water temp.) |
| THW6 | Thermistor (Zone1 flow temp.) |
| THW7 | Thermistor (Zone1 return temp.) |
| THW8 | Thermistor (Zone2 flow temp.) |
| THW9 | Thermistor (Zone2 return temp.) |
| THW10 | Thermistor (Mixing tank temp.) (Option) |
| THWB1 | Thermistor (Boiler flow temp.) (Option) |
| IN1 | Room thermostat 1 (Local supply) |
| IN2 | Flow switch 1 (Local supply) |
| IN3 | Flow switch 2 (Local supply) |
| IN4 | Demand control (Local supply) |
| IN5 | Outdoor thermostat (Local supply) |
| IN6 | Room thermostat 2 (Local supply) |
| IN7 | Flow switch 3 (Local supply) |
| IN8 | Electric energy meter 1 (Local supply) |
| IN9 | Electric energy meter 2 (Local supply) |
| IN10 | Heat meter (Local supply) |
| IN11 / IN12 | Smart grid ready input (Local supply) |
| INA1 | Flow sensor |
| FLOW TEMP. CONTROLLER (FTC) | |
| TBO.1-4 | Terminal block <Outputs> |
| TBI.1-6 | Terminal block <Signal Inputs, Thermistor> |
| F1 | Fuse (IEC T10AL250V) |
| F2 | Fuse (IEC T6.3AL250V) |
| SW1-6 | DIP switch *See Table 3 |
| X1-16 | Relay |
| LED1 | Power supply (FTC) |
| LED2 | Power supply (Main remote controller) |
| LED3 | Communication (FTC-Outdoor unit) |
| LED4 | Reading or writing data to SD card |
| CNPWM | Pump speed control signal for MP1 |
| CN108 | SD card connector |

1. Symbols used in wiring diagram are, ⊙⊙ : connector, ▭▭ : terminal block. Function with asterisk (*) may not be available depending on model types.
2. Indoor unit and outdoor unit connecting wires have polarities, make sure to match terminal numbers (S1, S2, S3) for correct wirings.
3. Since the outdoor unit side electric wiring may change, be sure to check the outdoor unit electric wiring diagram for service.
4. Refer to the installation manual for the water circulation diagrams of the models other than shown below.

**Table 1 Signal Inputs**

| Name | Terminal block | Connector | Item | OFF (Open) | ON (Short) |
|---|---|---|---|---|---|
| IN1 | TBI.1 7-8 | — | Room thermostat 1 input *1 | Refer to SW2-1 in <Table 4.3.1 DIP Switch Functions>. | |
| IN2 | TBI.1 5-6 | — | Flow switch 1 input | Refer to SW2-2 in <Table 4.3.1 DIP Switch Functions>. | |
| IN3 | TBI.1 3-4 | — | Flow switch 2 input (Zone1) | Refer to SW3-2 in <Table 4.3.1 DIP Switch Functions>. | |
| IN4 | TBI.1 1-2 | — | Demand control input | Normal | Heat source OFF/ Boiler operation *3 |
| IN5 | TBI.2 7-8 | — | Outdoor thermo-stat input *2 | Standard opera-tion | Heater operation/ Boiler operation *3 |
| IN6 | TBI.2 5-6 | — | Room thermostat 2 input *1 | Refer to SW3-1 in <Table 4.3.1 DIP Switch Functions>. | |
| IN7 | TBI.2 3-4 | — | Flow switch 3 input (Zone2) | Refer to SW3-2 in <Table 4.3.1 DIP Switch Functions>. | |
| IN8 | TBI.3 7-8 | — | Electric energy meter 1 | Refer to installation manual. | |
| IN9 | TBI.3 5-6 | — | Electric energy meter 2 | | |
| IN10 | TBI.2 1-2 | — | Heat meter | | |
| IN11 | TBI.3 3-4 | — | Smart grid ready input | | |
| IN12 | TBI.3 1-2 | — | | | |
| INA1 | TBI.4 1-3 | CN1A | Flow sensor | | |

*1. Set the ON/OFF cycle time of the room thermostat for 10 minutes or more; otherwise the compressor may be damaged.
*2. If using outdoor thermostat for controlling operation of heaters, the lifetime of the heaters and related parts may be reduced.
*3. To turn on the boiler operation, use the main remote controller to select "Boiler" in "External input setting" screen in the service menu.

**Table 2 Outputs**

| Name | Terminal block | Connector | Item | OFF | ON |
|---|---|---|---|---|---|
| OUT1 | TBO.1 1-2 | CNP1 | Water circulation pump 1 output (Space heating/cooling & DHW) | OFF | ON |
| OUT2 | TBO.1 3-4 | — | Water circulation pump 2 output (Space heating/cooling for Zone1) | OFF | ON |
| OUT3 | TBO.1 5-6 | — | Water circulation pump 3 output (Space heating/cooling for Zone2) *1 | OFF | ON |
| OUT4 | TBO.2 4-6 | CNV1 | 2-way valve 2b output *2 3-way valve (2-way valve) output | Heating | DHW |
| | — | CN851 | 3-way valve output | | |
| OUT5 | TBO.2 1-2 | — | Mixing valve output *1 | Stop | Close |
| | TBO.2 2-3 | | | | Open |
| OUT6 | — | CNBH 1-3 | Booster heater 1 output | OFF | ON |
| OUT7 | — | CNBH 5-7 | Booster heater 2 output | OFF | ON |
| OUT8 | TBO.4 7-8 | — | Cooling signal output | OFF | ON |
| OUT9 | TBO.4 5-6 | CNIH | Immersion heater output | OFF | ON |
| OUT10 | TBO.3 1-2 | — | Boiler output | OFF | ON |
| OUT11 | TBO.3 5-6 | — | Error output | Normal | Error |
| OUT12 | TBO.3 7-8 | — | Defrost output | Normal | Defrost |
| OUT13 | TBO.4 3-4 | — | 2-way valve 2a output *2 | OFF | ON |
| OUT14 | — | CNP4 | Water circulation pump 4 output (DHW) | OFF | ON |
| OUT15 | TBO.4 1-2 | — | Comp. ON signal | OFF | ON |
| OUT16 | TBO.3 3-4 | — | Thermo ON signal | OFF | ON |
| OUTA1 | TBI.4 7-8 | — | Analog output | 0V-10V | |

Do not connect to the terminals that are indicated as "—" in the "Terminal block" field.
*1. For 2-zone temperature control. *2. For 2-zone valve ON/OFF control.

## 4.3 Dip switch functions

The DIP switch number is printed on the circuit board next to the relevant switches. The word ON is printed on the circuit board and on the DIP switch block itself. To move the switch you need to use a pin or the corner of a thin metal ruler or similar.

DIP switch settings are listed below in Table 4.3.1.
Only an authorised installer can change DIP switch setting under one's own responsibility according to the installation condition.
Make sure to turn off both indoor unit and outdoor unit power supplies before changing the switch settings.

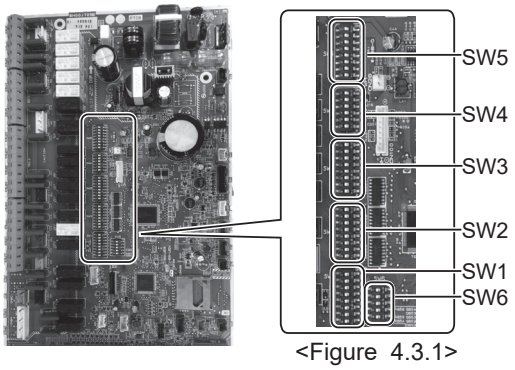

<Figure 4.3.1>

| DIP switch | | Function | OFF | ON | Default settings: Indoor model name |
|---|---|---|---|---|---|
| SW1 | SW1-1 | Boiler | WITHOUT Boiler | WITH Boiler | OFF |
| | SW1-2 | Heat pump maximum outlet water temperature | 55ºC | 60ºC | ON *1 |
| | SW1-3 | DHW tank | WITHOUT DHW tank | WITH DHW tank | ON |
| | SW1-4 | Immersion heater | WITHOUT Immersion heater | WITH Immersion heater | OFF: Except EHPT20X-MHEDW<br>ON : EHPT20X-MHEDW |
| | SW1-5 | Booster heater | WITHOUT Booster heater | WITH Booster heater | OFF: E**T***-M**D*<br>ON : E**T***-*M 2/6/9*D |
| | SW1-6 | Booster heater function | For heating only | For heating and DHW | OFF: E**T***-M**D*<br>ON : E**T***-*M 2/6/9*D |
| | SW1-7 | Outdoor unit type | Split type | Packaged type | OFF: E*ST***-*M**D<br>ON : E*PT**X-*M**D* |
| | SW1-8 | Wireless remote controller | WITHOUT Wireless remote controller | WITH Wireless remote controller | OFF |
| SW2 | SW2-1 | Room thermostat1 input (IN1) logic change | Zone1 operation stop at thermostat short | Zone1 operation stop at thermostat open | OFF |
| | SW2-2 | Flow switch1 input (IN2) logic change | Failure detection at short | Failure detection at open | OFF |
| | SW2-3 | Booster heater capacity restriction | Inactive | Active | OFF: Except E**T***-VM2*D<br>ON : E**T***-VM2*D |
| | SW2-4 | Cooling mode function | Inactive | Active | OFF: EH*T***-*M**D*<br>ON : ER*T***-*M**D |
| | SW2-5 | Automatic switch to backup heat source operation (When outdoor unit stops by error) | Inactive | Active *2 | OFF |
| | SW2-6 | Mixing tank | WITHOUT Mixing tank | WITH Mixing tank | OFF: Except E*ST***-*M*BD<br>ON : E*ST***-*M*BD |
| | SW2-7 | 2-zone temperature control | Inactive | Active *3 | |
| | SW2-8 | Flow sensor | WITHOUT Flow sensor | WITH Flow sensor | ON |
| SW3 | SW3-1 | Room thermostat 2 input (IN6) logic change | Zone2 operation stop at thermostat short | Zone2 operation stop at thermostat open | OFF |
| | SW3-2 | Flow switch 2 and 3 input logic change | Failure detection at short | Failure detection at open | OFF |
| | SW3-3 | 3-way valve type | AC motor | Stepping motor | OFF:E*PT20/30X-M**D*<br>E*ST**C/30D-*M**D<br>ON :E*PT17X-*M**D*<br>E*ST17/20D-*M**D |
| | SW3-4 | Electric energy meter | WITHOUT Electric energy meter | WITH Electric energy meter | OFF |
| | SW3-5 | Heating mode function *4 | Inactive | Active | ON |
| | SW3-6 | 2-zone valve ON/OFF control | Inactive | Active | OFF |
| | SW3-7 | Heat exchanger for DHW | Coil in tank | External plate HEX | ON |
| | SW3-8 | Heat meter | WITHOUT Heat meter | WITH Heat meter | OFF |
| SW4 | SW4-1 | — | — | — | OFF |
| | SW4-2 | — | — | — | OFF |
| | SW4-3 | — | — | — | OFF |
| | SW4-4 | Indoor unit only operation (during installation work) *5 | Inactive | Active | OFF |
| | SW4-5 | Emergency mode (Heater only operation) | Normal | Emergency mode (Heater only operation) | OFF *6 |
| | SW4-6 | Emergency mode (Boiler operation) | Normal | Emergency mode (Boiler operation) | OFF *6 |
| SW5 | SW5-1 | — | — | — | OFF |
| | SW5-2 | Advanced auto adaptation | Inactive | Active | ON |
| | SW5-3 | Capacity code | | | |
| | SW5-4 | | | | |
| | SW5-5 | | | | |
| | SW5-6 | | | | |
| | SW5-7 | | | | |
| | SW5-8 | — | — | — | OFF |
| SW6 | SW6-1 | — | — | — | OFF |
| | SW6-2 | — | — | — | OFF |
| | SW6-3 | Pressure sensor | Inactive | Active | OFF: Except E*ST**D-*M**D<br>ON : E*ST**D-*M**D |
| | SW6-4 | Analog output signal | Inactive | Active | OFF |
| | SW6-5 | — | — | — | OFF |

| | SW5-3 | SW5-4 | SW5-5 | SW5-6 | SW5-7 |
|---|---|---|---|---|---|
| E*ST**C-*M**D | ON | ON | ON | ON | OFF |
| E*ST**D-*M**D | ON | OFF | OFF | ON | OFF |
| E**T**X-*M**D* | OFF | OFF | OFF | OFF | OFF |

<Table 4.3.1>

**Notes:**
***1. When the cylinder unit is connected with a PUMY-P and PXZ outdoor unit of which maximum outlet water temperature is 55ºC, DIP SW1-2 must be changed to OFF.**
***2. External output (OUT11) will be available. For safety reasons, this function is not available for certain errors. (In that case, system operation must be stopped and only the water circulation pump keeps running.)**
***3. Active only when SW3-6 is set to OFF.**
***4. This switch functions only when the cylinder unit is connected with a PUHZ-FRP outdoor unit. When another type of outdoor unit is connected, the heating mode function is active regardless of the fact that this switch is ON or OFF.**
***5. Space heating and DHW can be operated only in indoor unit, like an electric heater. (Refer to "4.4.4 Indoor unit only operation". )**
***6. If emergency mode is no longer required, return the switch to OFF position.**

## 4.4 Field wiring

### 4.4.1 Electrical Connection

All electrical work should be carried out by a suitably qualified technician. Failure to comply with this could lead to electrocution, fire, and death. It will also invalidate product warranty. All wiring should be according to national wiring regulations.

| Breaker abbreviation | Meaning |
|---|---|
| ECB1 | Earth leakage circuit breaker for booster heater |
| ECB2 | Earth leakage circuit breaker for immersion heater |
| TB1 | Terminal block 1 |

The cylinder unit can be powered in two ways.
1. Power cable is run from the outdoor unit to the cylinder unit.
2. Cylinder unit has independent power source

Connections should be made to the terminals indicated in the figures to the left below depending on the phase.

Booster heater and immersion heater should be connected independently from one another to dedicated power supplies.

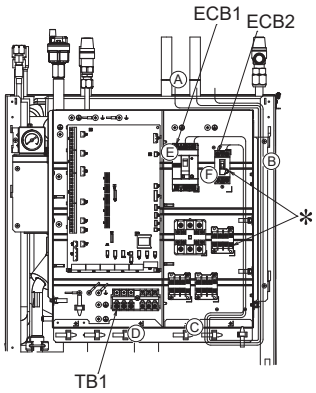


<1 phase (with immersion heater)>

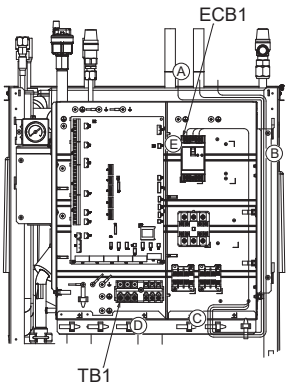


<3 phase (without immersion heater)>

Ⓐ Locally supplied wiring should be inserted through the inlets situated on the top of the cylinder unit. (Refer to <Table 4.1.1>.)
Ⓑ Wiring should be fed down the right hand side of the control and electrical box and clamped in place using clips provided.
Ⓒ The wires should be inserted individually through the cable inlets as below.
② Outputs wire
③ Indoor-Outdoor wire
⑤ Power line(B.H.)/ Power line(I.H.)(Option)
⑦ Signal input wires

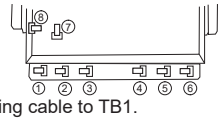


Ⓓ Connect the outdoor unit – cylinder unit connecting cable to TB1.
Ⓔ Connect the power cable for the booster heater to ECB1.
Ⓕ If immersion heater is present, connect the power cable to ECB2.

- Avoid contact between wiring and parts ( ✻ ).
- Make sure that ECB1 and ECB2 are ON.
- On completion of wiring ensure main remote controller cable is connected to the relay connector.

### ■ Option 1: Cylinder unit powered via outdoor unit

PXZ model is not available.
The model is Cylinder unit powered by independent source ONLY.

**<1 phase>**

Affix label A that is included with the manuals near each wiring diagram for cylinder unit and outdoor units.

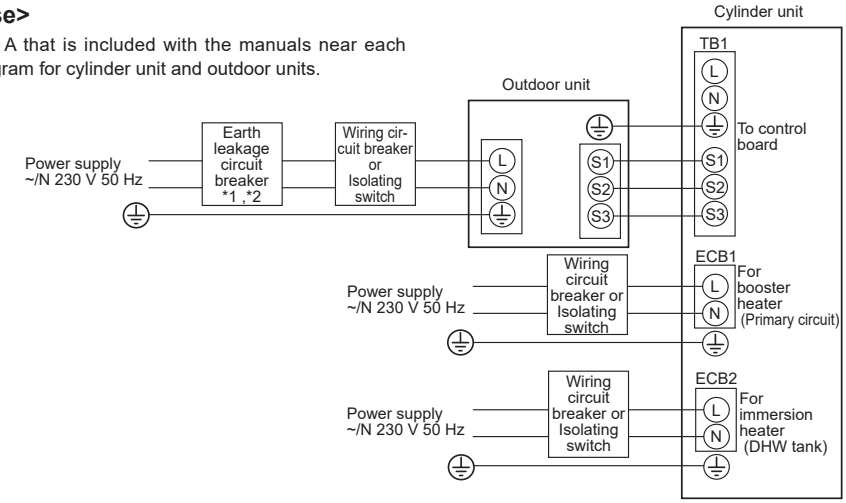


*1. If the installed earth leakage circuit breaker does not have an over-current protection function, install a breaker with that function along the same power line.
*2. A breaker with at least 3.0 mm contact separation in each pole shall be provided. Use earth leakage breaker (NV). The breaker shall be provided to ensure disconnection of all active phase conductors of the supply.
*3. Max. 45 m
If 2.5 mm² used, Max. 50 m
If 2.5 mm² used and S3 separated, Max. 80 m
*4. The values given in the table above are not always measured against the ground value.

<Figure 4.4.1>
Electrical connections 1 phase

| Description | Power supply | Capacity | Breaker | Wiring |
|---|---|---|---|---|
| Booster heater (Primary circuit) | ~/N 230 V 50 Hz | 2 kW | 16 A *2 | 2.5 mm² |
| | | 6 kW | 32 A *2 | 6.0 mm² |
| Immersion heater (DHW tank) | ~/N 230 V 50 Hz | 3 kW | 16 A *2 | 2.5 mm² |

| | | | |
|---|---|---|---|
| Wiring Wiring No. × size (mm²) | Cylinder unit - Outdoor unit | *3 | 3 × 1.5 (polar) |
| | Cylinder unit - Outdoor unit earth | *3 | 1 × Min. 1.5 |
| Circuit rating | Cylinder unit - Outdoor unit S1 - S2 | *4 | 230 V AC |
| | Cylinder unit - Outdoor unit S2 - S3 | *4 | 24 V DC |

**Notes:**
1. **Wiring size must comply with the applicable local and national codes.**
2. **Indoor unit/outdoor unit connecting cords shall not be lighter than polychloroprene sheathed flexible cord. (Design 60245 IEC 57) Indoor unit power supply cords shall not be lighter than polychloroprene sheathed flexible cord. (Design 60227 IEC 53)**
3. **Install an earth longer than other cables.**
4. **Please keep enough output capacity of power supply for each heater. Insufficient power supply capacity might cause chattering.**

### <3 phase>

Affix label A that is included with the manuals near each wiring diagram for cylinder unit and outdoor units.

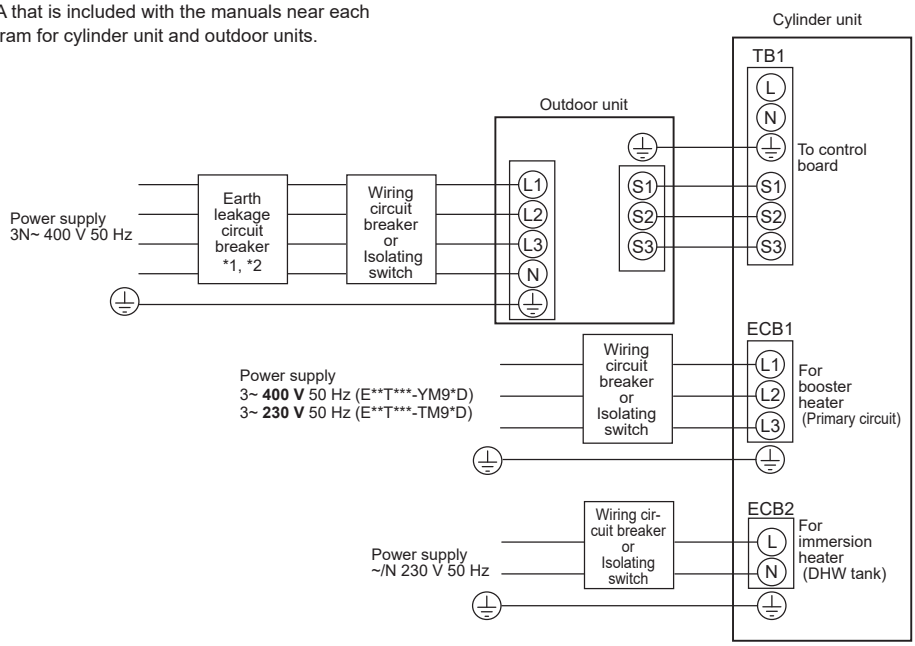


<Figure 4.4.2>
Electrical connections 3 phase

| Description | Power supply | Capacity (Indoor unit Ref.) | Breaker | Wiring |
|---|---|---|---|---|
| Booster heater (Primary circuit) | 3~ 400 V 50 Hz | 9 kW | 16 A *2 | 2.5 mm² |
| | 3~ 230 V 50 Hz | 9 kW | 32 A *2 | 6.0 mm² |
| Immersion heater (DHW tank) | ~/N 230 V 50 Hz | 3 kW | 16 A *2 | 2.5 mm² |

| | | |
|---|---|---|
| Wiring Wiring No. × size (mm²) | Cylinder unit - Outdoor unit *3 | 3 × 1.5 (polar) |
| | Cylinder unit - Outdoor unit earth *3 | 1 × Min. 1.5 |
| Circuit rating | Cylinder unit - Outdoor unit S1 - S2 *4 | 230 V AC |
| | Cylinder unit - Outdoor unit S2 - S3 *4 | 24 V DC |

*1. If the installed earth leakage circuit breaker does not have an over-current protection function, install a breaker with that function along the same power line.
*2. A breaker with at least 3.0 mm contact separation in each pole shall be provided. Use earth leakage breaker (NV).
The breaker shall be provided to ensure disconnection of all active phase conductors of the supply.
*3. Max. 45 m
If 2.5 mm² used, Max. 50 m
If 2.5 mm² used and S3 separated, Max. 80 m
*4. The values given in the table above are not always measured against the ground value.

**Notes:**
**1. Wiring size must comply with the applicable local and national codes.**
**2. Indoor unit/outdoor unit connecting cords shall not be lighter than polychloroprene sheathed flexible cord. (Design 60245 IEC 57)**
**Indoor unit power supply cords shall not be lighter than polychloroprene sheathed flexible cord. (Design 60227 IEC 53)**
**3. Install an earth longer than other cables.**
**4. Please keep enough output capacity of power supply for each heater. Insufficient power supply capacity might cause chattering.**

## ■ Option 2: Cylinder unit powered by independent source

If the cylinder unit and outdoor unit have separate power supplies, the following requirements MUST be carried out:

- **Change the interconnected wiring in the control and electrical box of the cylinder unit (see Figure 4.4.3)**
- **Turn the outdoor unit DIP switch SW8-3 to ON**
- **Turn on the outdoor unit BEFORE the cylinder unit.**
- **Power by independent source is not available for particular models of outdoor unit model. For more detail, refer to the connecting outdoor unit Installation Manual.**

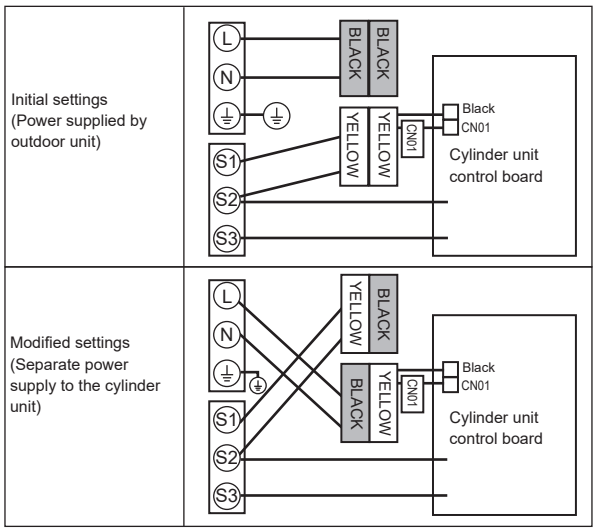


<Figure 4.4.3>

### <1 phase>

Affix label B that is included with the manuals near each wiring diagram for cylinder unit and outdoor units.

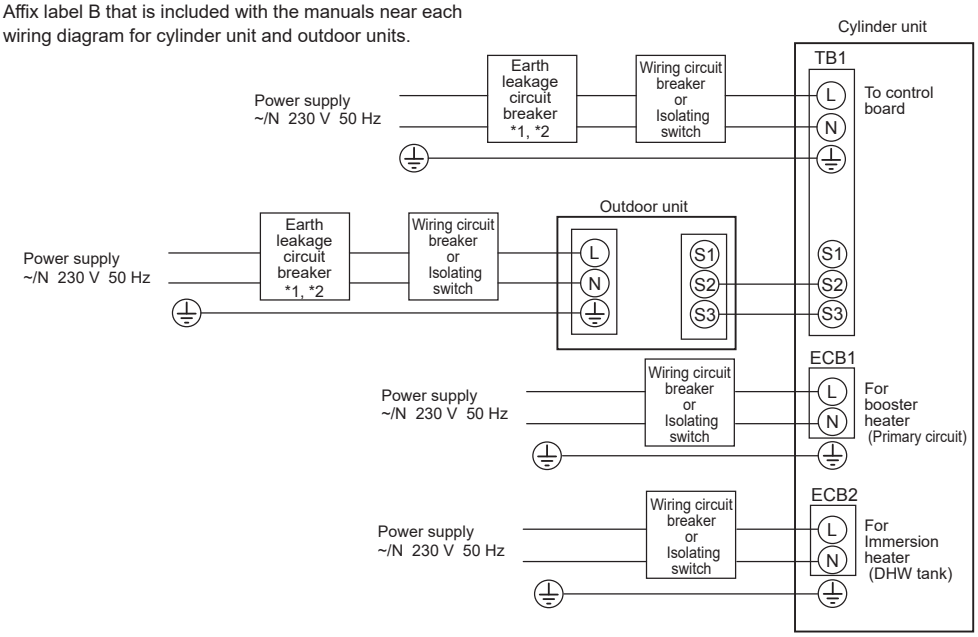


<Figure 4.4.4>
Electrical connections 1 phase

| Description | Power supply | Capacity | Breaker | Wiring |
|---|---|---|---|---|
| Booster heater (Primary circuit) | ~/N 230 V 50 Hz | 2 kW | 16 A *2 | 2.5 mm² |
| | | 6 kW | 32 A *2 | 6.0 mm² |
| Immersion heater (DHW tank) | ~/N 230 V 50 Hz | 3 kW | 16 A *2 | 2.5 mm² |

| | | |
|---|---|---|
| Cylinder unit power supply | | ~/N 230 V 50 Hz |
| Cylinder unit input capacity Main switch (Breaker) | *2 | 16 A |
| Wiring Wiring No. × size (mm²) | Cylinder unit power supply | 2 × Min. 1.5 |
| | Cylinder unit power supply earth | 1 × Min. 1.5 |
| | Cylinder unit - Outdoor unit *3 | 2 × Min. 0.3 |
| | Cylinder unit - Outdoor unit earth | — |
| Circuit rating | Cylinder unit L - N *4 | 230 V AC |
| | Cylinder unit - Outdoor unit S1 - S2 *4 | — |
| | Cylinder unit - Outdoor unit S2 - S3 *4 | 24 V DC |

*1. If the installed earth leakage circuit breaker does not have an over-current protection function, install a breaker with that function along the same power line.
*2. A breaker with at least 3.0 mm contact separation in each pole shall be provided. Use earth leakage breaker (NV).
The breaker shall be provided to ensure disconnection of all active phase conductors of the supply.
*3. Max. 120 m
*4. The values given in the table above are not always measured against the ground value.

**Note:**
1. **Wiring size must comply with the applicable local and national codes.**
2. **Indoor unit/outdoor unit connecting cords shall not be lighter than polychloroprene sheathed flexible cord. (Design 60245 IEC 57)**
   **Indoor unit power supply cords shall not be lighter than polychloroprene sheathed flexible cord. (Design 60227 IEC 53)**
3. **Install an earth longer than other cables.**
4. **Please keep enough output capacity of power supply for each heater. Insufficient power supply capacity might cause chattering.**

### <3 phase>

Affix label B that is included with the manuals near each wiring diagram for cylinder unit and outdoor units.

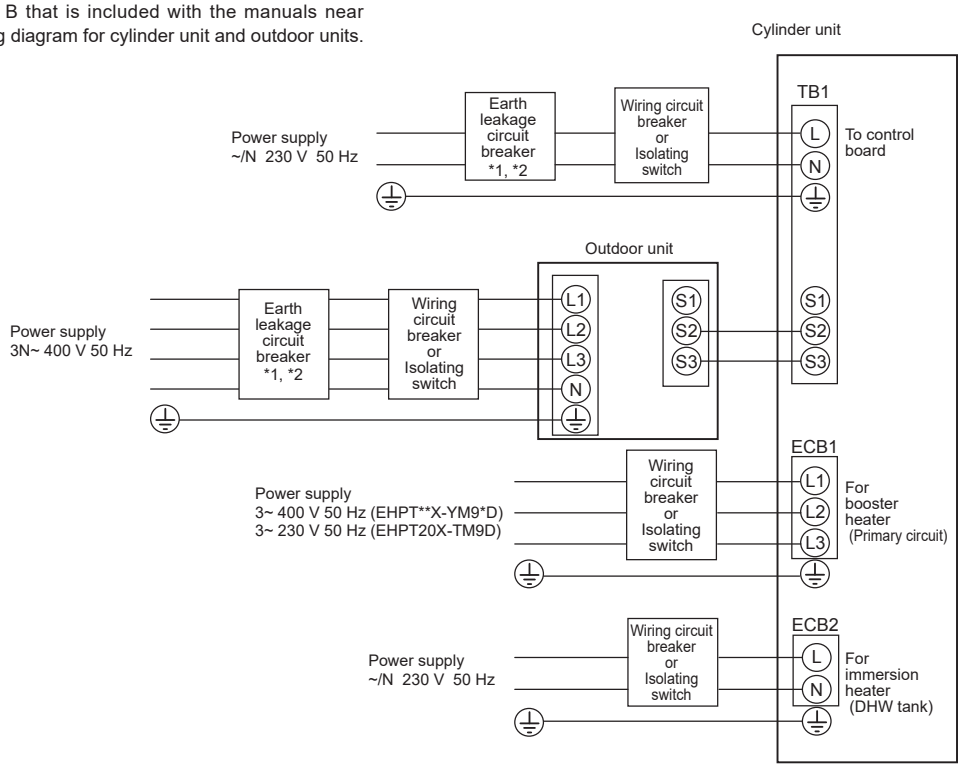


<Figure 4.4.5>
Electrical connections 3 phase

| Description | Power supply | Capacity (Indoor unit Ref.) | Breaker | Wiring |
|---|---|---|---|---|
| Booster heater (Primary circuit) | 3~ 400 V 50 Hz | 9 kW | 16 A *2 | 2.5 mm² |
| | 3~ 230 V 50 Hz | 9 kW | 32 A *2 | 6.0 mm² |
| Immersion heater (DHW tank) | ~/N 230 V 50 Hz | 3 kW | 16 A *2 | 2.5 mm² |

| | | |
|---|---|---|
| Cylinder unit power supply | | ~/N 230 V 50 Hz |
| Cylinder unit input capacity Main switch (Breaker) | *2 | 16 A |
| Wiring Wiring No. × size (mm²) | Cylinder unit power supply | 2 × Min. 1.5 |
| | Cylinder unit power supply earth | 1 × Min. 1.5 |
| | Cylinder unit - Outdoor unit *3 | 2 × Min. 0.3 |
| | Cylinder unit - Outdoor unit earth | — |
| Circuit rating | Cylinder unit L - N *4 | 230 V AC |
| | Cylinder unit - Outdoor unit S1 - S2 *4 | — |
| | Cylinder unit - Outdoor unit S2 - S3 *4 | 24 V DC |

*1. If the installed earth leakage circuit breaker does not have an over-current protection function, install a breaker with that function along the same power line.
*2. A breaker with at least 3.0 mm contact separation in each pole shall be provided. Use earth leakage breaker (NV). The breaker shall be provided to ensure disconnection of all active phase conductors of the supply.
*3. Max. 120 m
*4. The values given in the table above are not always measured against the ground value.

**Note:**
1. **Wiring size must comply with the applicable local and national codes.**
2. **Indoor unit/outdoor unit connecting cords shall not be lighter than polychloroprene sheathed flexible cord. (Design 60245 IEC 57) Indoor unit power supply cords shall not be lighter than polychloroprene sheathed flexible cord. (Design 60227 IEC 53)**
3. **Install an earth longer than other cables.**
4. **Please keep enough output capacity of power supply for each heater. Insufficient power supply capacity might cause chattering.**

### 4.4.2 Connecting inputs/outputs

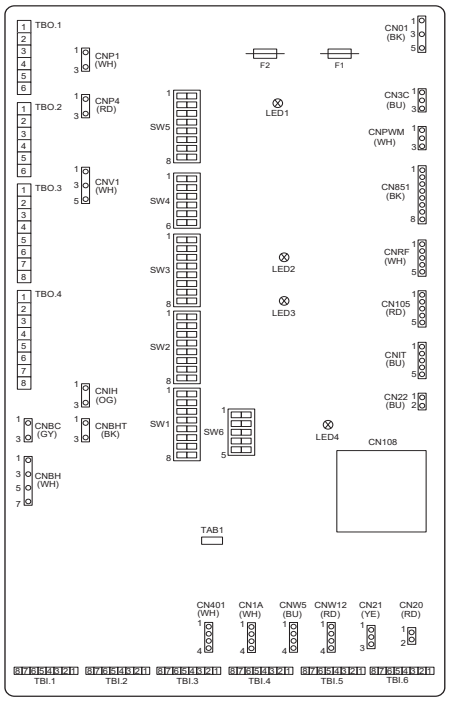


<Figure 4.4.6>

**Wiring specification and local supply parts**

| Item | Name | Model and specifications |
|---|---|---|
| Signal input function | Signal input wire | Use sheathed vinyl coated cord or cable.<br>Max. 30 m<br>Wire type: CV, CVS or equivalent<br>Wire size: Stranded wire 0.13 mm² to 0.52 mm²<br>Solid wire: ø0.4 mm to ø0.8 mm |
| | Switch | Non-voltage “a” contact signals<br>Remote switch: minimum applicable load 12 V DC, 1 mA |

**Note:**
**Stranded wire should be processed with insulation-covered bar terminal (DIN46228-4 standard compatible type).**

## ■ Signal inputs

| Name | Terminal block | Connector | Item | OFF (Open) | ON (Short) |
|---|---|---|---|---|---|
| IN1 | TBI.1 7-8 | — | Room thermostat 1 input *1 | Refer to SW2-1 in <4.3 Dip switch functions>. | |
| IN2 | TBI.1 5-6 | — | Flow switch 1 input | Refer to SW2-2 in <4.3 Dip switch functions>. | |
| IN3 | TBI.1 3-4 | — | Flow switch 2 input (Zone1) | Refer to SW3-2 in <4.3 Dip switch functions>. | |
| IN4 | TBI.1 1-2 | — | Demand control input | Normal | Heat source OFF/ Boiler operation *3 |
| IN5 | TBI.2 7-8 | — | Outdoor thermostat input *2 | Standard operation | Heater operation/ Boiler operation *3 |
| IN6 | TBI.2 5-6 | — | Room thermostat 2 input *1 | Refer to SW3-1 in <4.3 Dip switch functions>. | |
| IN7 | TBI.2 3-4 | — | Flow switch 3 input (Zone2) | Refer to SW3-2 in <4.3 Dip switch functions>. | |
| IN8 | TBI.3 7-8 | — | Electric energy meter 1 | *4 | |
| IN9 | TBI.3 5-6 | — | Electric energy meter 2 | | |
| IN10 | TBI.2 1-2 | — | Heat meter | | |
| IN11 | TBI.3 3-4 | — | Smart grid ready input | *5 | |
| IN12 | TBI.3 1-2 | — | | | |
| INA1 | TBI.4 1-3 | CN1A | Flow sensor | — | — |

*1. Set the ON/OFF cycle time of the room thermostat for 10 minutes or more; otherwise the compressor may be damaged.
*2. If using outdoor thermostat for controlling operation of heaters, the lifetime of the heaters and related parts may be reduced.
*3. To turn on the boiler operation, use the main remote controller to select “Boiler” in “External input setting“ screen in the service menu.
*4. Connectable electric energy meter and heat meter

- Pulse type: Voltage free contact for 12 VDC detection by FTC (TBI.2 1pin ,TBI.3 5 and 7 pins have a positive voltage.)
- Pulse duration: Minimum ON time: 40 ms
  Minimum OFF time: 100 ms
- Possible unit of pulse: 0.1 pulse/kWh, 1 pulse/kWh, 10 pulse/kWh, 100 pulse/kWh, 1000 pulse/kWh

Those values can be set by the main remote controller. (Refer to the menu tree in "Main remote controller".)
*5. As for the SG ready, refer to section 4.7.

## ■ Thermistor inputs

| Name | Terminal block | Connector | Item | Optional part model |
|---|---|---|---|---|
| TH1 | — | CN20 | Thermistor (Room temp.) (Option) | PAC-SE41TS-E |
| TH2 | — | CN21 | Thermistor (Ref. liquid temp.) | — |
| THW1 | — | CNW12 1-2 | Thermistor (Flow water temp.) | — |
| THW2 | — | CNW12 3-4 | Thermistor (Return water temp.) | — |
| THW5A | — | CNW5 1-2 | Thermistor (DHW tank upper water temp.) | — |
| THW5B | — | CNW5 3-4 | Thermistor (DHW tank lower water temp.) | — |
| THW6 | TBI.5 7-8 | — | Thermistor (Zone1 flow water temp.) (Option) *1 | PAC-TH011-E |
| THW7 | TBI.5 5-6 | — | Thermistor (Zone1 return water temp.) (Option) *1 | |
| THW8 | TBI.5 3-4 | — | Thermistor (Zone2 flow water temp.) (Option) *1 | PAC-TH011-E |
| THW9 | TBI.5 1-2 | — | Thermistor (Zone2 return water temp.) (Option) *1 | |
| THWB1 | TBI.6 7-8 | — | Thermistor (Boiler flow water temp.) (Option) *1 | PAC-TH012HT-E(5 m)/ PAC-TH012HTL-E(30 m) |
| THW10 | TBI.6 5-6 | — | Thermistor (Mixing tank water temp.) (Option) *1 | |

**Ensure to wire thermistor wirings away from the power line and/or OUT1 to 16 wirings.**
***1. The maximum length of the thermistor wiring is 30 m.**
**The length of the optional thermistors are 5 m. If you need to splice and extend the wirings, following points must be carried out.**
**1) Connect the wirings by soldering.**
**2) Insulate each connecting point against dust and water. Stranded wire should be processed with insulation-covered bar terminal (DIN46228-4 standard compatible type).**

## ■ Outputs

| Name | Terminal block | Connector | Item | OFF | ON | Signal/Max current | Max. total current |
|---|---|---|---|---|---|---|---|
| OUT1 | TBO.1 1-2 | CNP1 | Water circulation pump 1 output (Space heating/cooling & DHW) | OFF | ON | 230 V AC 1.0 A Max. (Inrush current 40 A Max.) | 4.0 A (a) |
| OUT2 | TBO.1 3-4 | — | Water circulation pump 2 output (Space heating/cooling for Zone1) | OFF | ON | 230 V AC 1.0 A Max. (Inrush current 40 A Max.) | |
| OUT3 | TBO.1 5-6 | — | Water circulation pump 3 output (Space heating/cooling for Zone2) *1<br>2-way valve 2b output *2 | OFF | ON | 230 V AC 1.0 A Max. (Inrush current 40 A Max.) | |
| OUT14 | — | CNP4 | Water circulation pump 4 output (DHW) | OFF | ON | 230 V AC 1.0 A Max. (Inrush current 40 A Max.) | |
| OUT4 | TBO.2 4-6 | CNV1 | 3-way valve (2-way valve) output | Heating | DHW | 230 V AC 0.1 A Max. | 3.0 A (b) |
| | — | CN851 | 3-way valve output | | | | |
| OUT5 | TBO.2 1-2 | — | Mixing valve output *1 | Stop | Close | 230 V AC 0.1 A Max. | |
| | TBO.2 2-3 | | | | Open | | |
| OUT6 | — | CNBH 1-3 | Booster heater 1 output | OFF | ON | 230 V AC 0.5 A Max. (Relay) | |
| OUT7 | — | CNBH 5-7 | Booster heater 2 output | OFF | ON | 230 V AC 0.5 A Max. (Relay) | |
| OUT8 | TBO.4 7-8 | — | Cooling signal output | OFF | ON | 230 V AC 0.5 A Max. | |
| OUT9 | TBO.4 5-6 | CNIH | Immersion heater output | OFF | ON | 230 V AC 0.5 A Max. (Relay) | |
| OUT11 | TBO.3 5-6 | — | Error output | Normal | Error | 230 V AC 0.5 A Max. | |
| OUT12 | TBO.3 7-8 | — | Defrost output | Normal | Defrost | 230 V AC 0.5 A Max. | |
| OUT13 | TBO.4 3-4 | — | 2-way valve 2a output *2 | OFF | ON | 230 V AC 0.1 A Max. | |
| OUT15 | TBO.4 1-2 | — | Comp ON signal | OFF | ON | 230 V AC 0.5 A Max. | |
| OUT10 | TBO.3 1-2 | — | Boiler output | OFF | ON | non-voltage contact<br>·220-240 V AC (30 V DC) 0.5 A or less<br>·10 mA 5 V DC or more | — |
| OUT16 | TBO.3 3-4 | — | Heating/Cooling thermo ON signal | OFF | ON | | |
| OUTA1 | TBI.4 7-8 | — | Analog output | 0 - 10 V | | 0 - 10 V DC 5 mA max. | — |

**Do not connect to the terminals that are indicated as "—" in the "Terminal block" field.**
***1 For 2-zone temperature control.**
***2 For 2-zone valve ON/OFF control.**

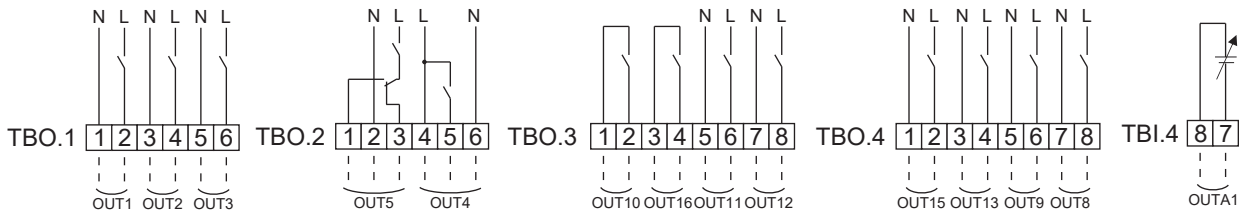


**Wiring specification and local supply parts**

| Item | Name | Model and specifications |
|---|---|---|
| External output function | Outputs wire | Use sheathed vinyl coated cord or cable.<br>Max. 30 m<br>Wire type: CV, CVS or equivalent<br>Wire size: Stranded wire 0.25 mm² to 1.5 mm²<br>Solid wire: ø0.57 mm to ø1.2 mm |

**How to use TBO.1 to 4**

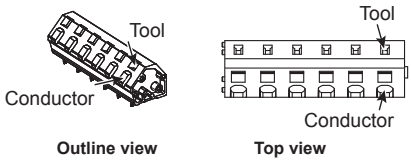


**Connect them using either way as shown above.**

<Figure 4.4.7>

**Notes:**
**1. When the cylinder unit is powered via outdoor unit, the maximum grand total current of (a)+(b) is 3.0 A.**
**2. Do not connect multiple water circulation pumps directly to each output (OUT1, OUT2, and OUT3). In such a case, connect them via (a) relay(s).**
**3. Do not connect water circulation pumps to both TBO.1 1-2 and CNP1 at the same time.**
**4. Connect an appropriate surge absorber to OUT10 (TBO.3 1-2) depending on the load at site.**
**5. Stranded wire should be processed with insulation-covered bar terminal (DIN46228-4 standard compatible type).**
**6. Use the same thing as the Signal input wire for OUTA1 wiring.**

### 4.4.3 Wiring for 2-zone temperature control

Connect the pipe work and locally supplied parts according to the relevant circuit diagram shown “4.5.2 Local system”.

<Mixing valve>

■ **Except 2-zone cylinder**

Connect the signal line to open Port A (hot water inlet port) to TBO. 2-3 (Open), the signal line to open Port B (cold water inlet port) to TBO. 2-1 (Close), and the neutral terminal wire to TBO. 2-2 (N).

■ **2-zone cylinder**

Connect the signal line to open Port A (hot water inlet port) to TBO. 2-3 (Close), the signal line to open Port B (cold water inlet port) to TBO. 2-1 (Open), and the neutral terminal wire to TBO. 2-2 (N).

<Thermistor>

- Do not install the thermistors on the mixing tank.
- Install the Zone2 flow temp. thermistor (THW8) near the mixing valve.
- The maximum length of the thermistor wiring is 30 m.
- The length of the optional thermistors are 5 m. If you need to splice and extend the wirings, following points must be carried out.
  1) Connect the wirings by soldering.
  2) Insulate each connecting point against dust and water.

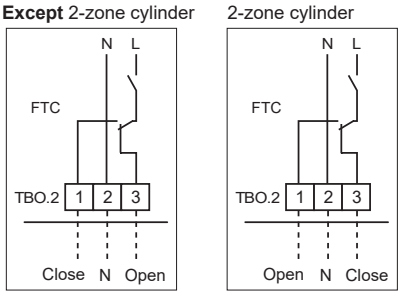


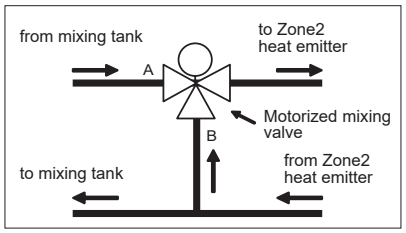


### DIP Switch settings of Cylinder unit (Hydrobox)

Setting the following DIP switches are necessary for 2-zone control. (See the installation manual of Cylinder unit (Hydrobox) for more information.)

| DIP switch | Function | OFF | ON | Setting when using 2-zone kit |
|---|---|---|---|---|
| SW2-6 | Mixing tank | WITHOUT Mixing tank | WITH Mixing tank | ON |
| SW2-7 | 2-zone temperature control | Inactive | Active * | ON |

* Active only when SW3-6 is set to OFF.

## Specifications

| | |
|---|---|
| Model name | PAC-TZ02-E |
| Dimension | 265 mm × 383 mm × 383 mm |
| Weight | 17 kg |
| Power supply | 230 V/single phase/50 Hz from Cylinder unit (Hydrobox) |
| Sound pressure level | 28 dB(A) |
| Sound power level | 40 dB(A) |
| Pump2, 3 | Max. 52 W/0.52 A |
| | Max. head 7.0 m *1 |
| Mixing valve | 5 W |
| | Running time 90° 120s |
| Water flow rate range | Depend on outdoor unit |

Note:

● Max. flow rate is 36.9 L/min. If the flow rate exceeds 36.9L/min, pipes would be eroded.

● The water flow rate between the Cylinder unit (Hydrobox) and the 2-zone kit must be greater than the total flow rate of Zone1 and Zone2.

### Pump performance view

| Display | Performance in % of MAX consumption |
|---|---|
| One green LED | 0 |
| Two green LED | 0-25 |
| Two green LED + one yellow LED | 25-50 |
| Two green LED + two yellow LED | 50-75 |
| Two green LED + three yellow LED | 75-100 |

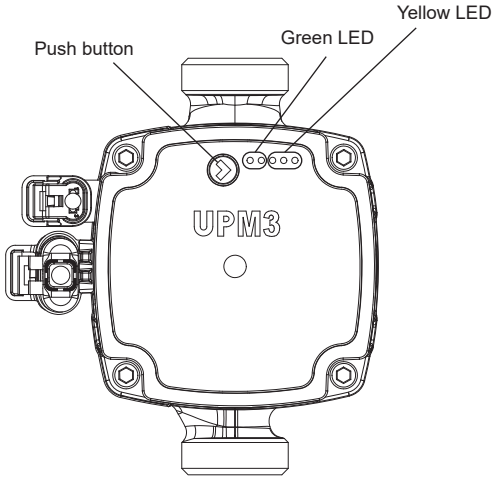

## Pump setting selection

You can check the setting by pressing the push button.
If you press the button for 2 to 10 seconds, the user interface switches to “setting selection” if the user interface is unlocked.
You can change the settings as below table.

| Mode | LED1 green | LED2 green | LED3 yellow | LED4 yellow | LED5 yellow |
|---|---|---|---|---|---|
| PP1 | ● | | ● | | |
| PP2 | ● | | ● | ● | |
| PP3 | ● | | ● | ● | ● |
| PP AA | ● | | | | |
| CP1 | | ● | ● | | |
| CP2 | | ● | ● | ● | |
| CP3 | | ● | ● | ● | ● |
| CP AA | | ● | | | |
| CC1 | | | ● | | |
| CC2 | | | ● | ● | |
| CC3 | | | ● | ● | ● |

## PP: Proportional Pressure

The head (pressure) is reduced at falling heat demand and increased at rising heat demand.

PP1: lowest proportional pressure curve
PP2: intermediate proportional pressure curve
PP3: highest proportional pressure curve
PP Auto Adapt: highest to lowest proportional pressure curve

The Auto Adapt function enables the circulator to adjust the pump performance automatically to the size of the system or the variations in load over time.

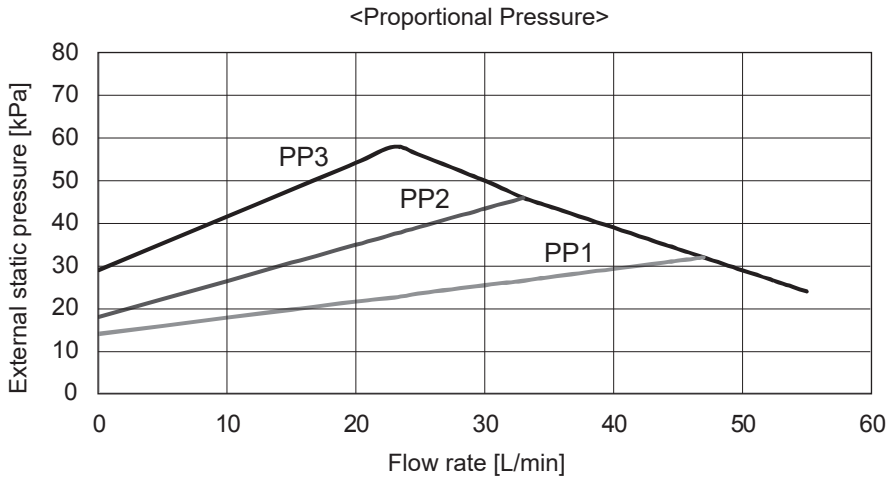

### CP: Constant Pressure

The head (pressure) is kept constant, irrespective of the heat demand.

CP1: lowest constant pressure curve
CP2: intermediate constant pressure curve
CP3: highest constant pressure curve
CP Auto Adapt: highest to lowest constant pressure curve

The Auto Adapt function enables the circulator to adjust the pump performance automatically to the size of the system or the variations in load over time.

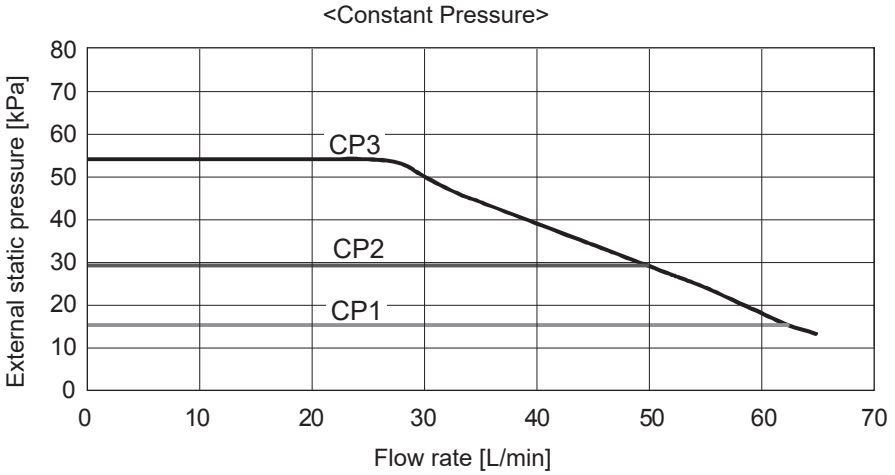


### CC: Constant Curve

The circulator runs on a constant curve.

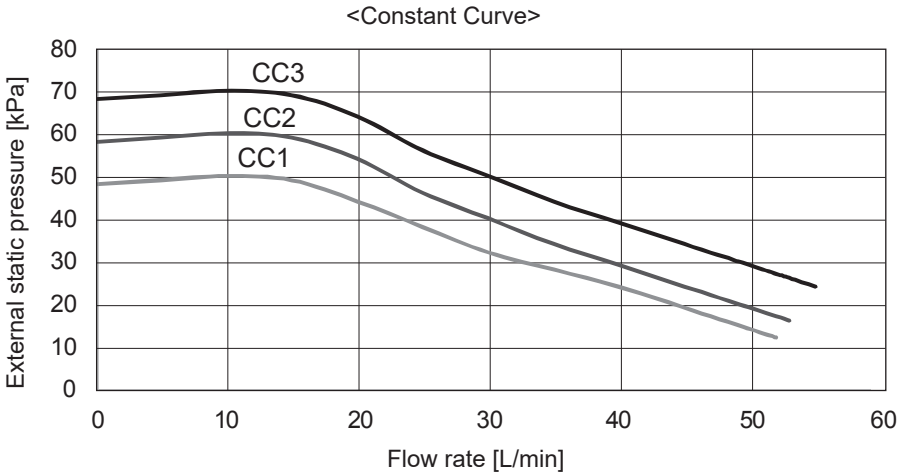

### 4.4.4 Indoor unit only operation (during installation work)

In the case when DHW or heating operation is required prior to connection of the outdoor unit; i.e. during installation work, an electric heater in indoor unit (*1) can be used.
*1 Model with electric heater only.

1. To start operation
● Check if the indoor unit power supply is OFF, and turn DIP switch 4-4 and 4-5 ON.
● Turn ON the indoor unit power supply.
2. To end operation*2
● Turn OFF the indoor unit power supply.
● Turn DIP switch 4-4 and 4-5 OFF.
*2 When the indoor unit only operation is ended, ensure to check over the settings after outdoor unit is connected.
**Note:**
**Prolonged running of this operation may affect the life of the electric heater.**

### 4.4.5 Using SD memory card

The cylinder unit is equipped with an SD memory card interface in FTC.
Using an SD memory card can simplify main remote controller settings and can store operating logs. *1

*1 To edit main remote controller settings or to check operating data, an Ecodan service tool (for use with PC) is required.

**<Handling precautions>**
(1) Use an SD memory card that complies with the SD standards. Check that the SD memory card has a logo on it of those shown to the right.
(2) SD memory cards to the SD standards include SD, SDHC, mini SD, micro SD, and micro SDHC memory cards. The capacities are available up to 32 GB. Choose that with a maximum allowable temperature of 55ºC.
(3) When the SD memory card is a mini SD, mini SDHC, micro SD, or micro SDHC memory card, use an SD memory card converter adapter.
(4) Before writing to the SD memory card, release the write-protect switch.

(5) Before inserting or ejecting an SD memory card, make sure to power off the system. If an SD memory card is inserted or ejected with the system powered on, the stored data could be corrupted or the SD memory card be damaged. *An SD memory card is live for a short duration after the system is powered off. Before insertion or ejection wait until the LED lamps on the FTC control board are all off.
(6) The read and write operations have been verified using the following SD memory cards, however, these operations are not always guaranteed as the specifications of these SD memory cards could change.

| Manufacturer | Model | Tested in |
|---|---|---|
| Verbatim | #44015 | Mar. 2012 |
| SanDisk | SDSDB-002G-B35 | Oct. 2011 |
| Panasonic | RP-SDP04GE1K | Oct. 2011 |
| Arvato | 2GB PS8032 TSB 24nm MLC | Jun. 2012 |
| Arvato | 2GB PS8035 TSB A19nm MLC | Jul. 2014 |
| SanDisk | SDSDUN-008G-G46 | Oct. 2016 |
| Verbatim | #43961 | Oct. 2016 |
| Verbatim | #44018 | Oct. 2016 |
| VANTASTEK | VSDHC08 | Sep.2017 |
| RiTEK | RiDATA 8GB SDHC | Aug. 2021 |

Before using a new SD memory card (including the card that comes with the unit), always check that the SD memory card can be safely read and written to by the FTC controller.
<How to check read and write operations>
a) Check for correct wiring of power supply to the system. For more details, refer to section 4.4.1.
(Do not power on the system at this point.)
b) Insert an SD memory card.
c) Power on the system.
d) The LED4 lamp lights if the read and write operations are successfully completed. If the LED4 lamp continues blinking or does not light, the SD memory card cannot be read or written to by the FTC controller.

(7) Make sure to follow the instruction and the requirement of the SD memory card's manufacturer.
(8) Format the SD memory card if determined unreadable in step (6). This could make it readable.
Download an SD card formatter from the following site.
SD Association homepage: https://www.sdcard.org/home/
(9) FTC supports FAT file system but not NTFS file system.
(10) Mitsubishi Electric is not liable for any damages, in whole or in part, including failure of writing to an SD memory card, and corruption and loss of the saved data, or the like. Back up saved data as necessary.
(11) Do not touch any electronic parts on the FTC control board when inserting or ejecting an SD memory card, or else the control board could fail.

| Logos |
|---|
| |
| **Capacities** |
| 2 GB to 32 GB *2 |
| **SD speed classes** |
| All |

• The SD Logo is a trademark of SD-3C, LLC.
The mini SD logo is a trademark of SD-3C, LLC.
The micro SD logo is a trademark of SD-3C, LLC.

*2 A 2 GB SD memory card stores up to 30 days of operation logs.

## 4.5 Water circuit diagrams

### 4.5.1 Component parts

**<E**T***-*M**D>**

**(Packaged model system)**

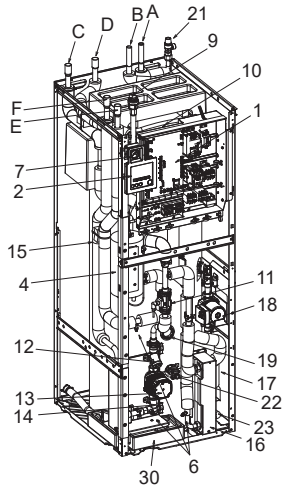


**(Split model system)**

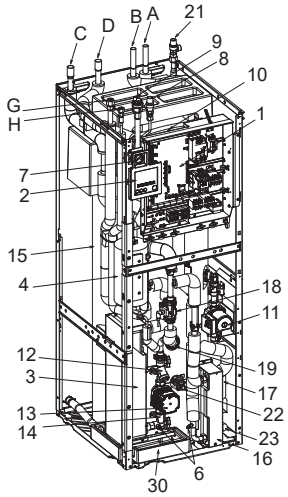


**(Split model system)**

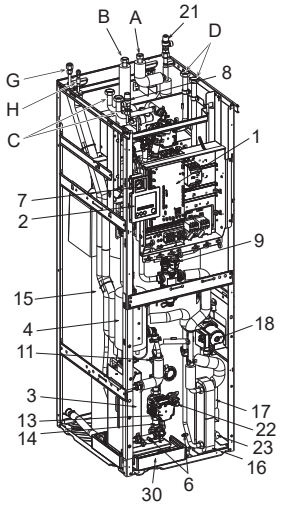


<Figure 4.5.1>

**Note:**
**For installation of all E**T***-*M*ED* models, make sure to install a suitably sized primary-side expansion vessel.**
**(See figure 4.5.7 and 4.5.8 for further guidance)**

| No. | Part name | EHST17/20D-*M*D | EHST20/30D-*M*ED | EHST20/30D-MED | EHST20C-*M*D | EHST20/30C-*M*ED | EHST20/30C-MED | ERST17/20D-*M*D | ERST17D-*M*BD | ERST30D-*M*ED |
|---|---|---|---|---|---|---|---|---|---|---|
| A | DHW outlet pipe | ✔ | ✔ | ✔ | ✔ | ✔ | ✔ | ✔ | ✔ | ✔ |
| B | Cold water inlet pipe | ✔ | ✔ | ✔ | ✔ | ✔ | ✔ | ✔ | ✔ | ✔ |
| C | Water pipe (Space heating/cooling return connection) | ✔ | ✔ | ✔ | ✔ | ✔ | ✔ | ✔ | ✔ | ✔ |
| D | Water pipe (Space heating/cooling flow connection) | ✔ | ✔ | ✔ | ✔ | ✔ | ✔ | ✔ | ✔ | ✔ |
| E | Water pipe (Flow from heat pump connection) | — | — | — | — | — | — | — | — | — |
| F | Water pipe (Return to heat pump connection) | — | — | — | — | — | — | — | — | — |
| G | Refrigerant pipe (Gas) | ✔ | ✔ | ✔ | ✔ | ✔ | ✔ | ✔ | ✔ | ✔ |
| H | Refrigerant pipe (Liquid) | ✔ | ✔ | ✔ | ✔ | ✔ | ✔ | ✔ | ✔ | ✔ |
| 1 | Control and electrical box | ✔ | ✔ | ✔ | ✔ | ✔ | ✔ | ✔ | ✔ | ✔ |
| 2 | Main remote controller | ✔ | ✔ | ✔ | ✔ | ✔ | ✔ | ✔ | ✔ | ✔ |
| 3 | Plate heat exchanger (Refrigerant - Water) | ✔ | ✔ | ✔ | ✔ | ✔ | ✔ | ✔ | ✔ | ✔ |
| 4 | Booster heater 1,2 | ✔ | ✔ | — | ✔ | ✔ | — | ✔ | ✔ | ✔ |
| 5 | 3-way valve | ✔ | ✔ | ✔ | ✔ | ✔ | ✔ | ✔ | ✔ | ✔ |
| 6 | Drain cock (Primary circuit) | ✔ | ✔ | ✔ | ✔ | ✔ | ✔ | ✔ | ✔ | ✔ |
| 7 | Manometer | ✔ | ✔ | ✔ | ✔ | ✔ | ✔ | ✔ | ✔ | ✔ |
| 8 | Pressure relief valve (3 bar) | ✔ | ✔ | ✔ *2, 3 | ✔ *2 | ✔ *2, 3 | ✔ *2, 3 | ✔ | ✔ | ✔ *3 |
| 9 | Automatic air vent | ✔ | ✔ | ✔ | ✔ | ✔ | ✔ | ✔ | ✔ | ✔ |
| 10 | Expansion vessel (Primary circuit) | ✔ | — | — | ✔ | — | — | ✔ | ✔ | — |
| 11 | Flow sensor | ✔ | ✔ | ✔ | ✔ | ✔ | ✔ | ✔ | ✔ | ✔ |
| 12 | Strainer valve | ✔ | ✔ | ✔ | ✔ | ✔ | ✔ | ✔ | ✔ | ✔ |
| 13 | Water circulation pump 1 (Primary circuit) | ✔ | ✔ | ✔ | ✔ | ✔ | ✔ | ✔ | ✔ | ✔ |
| 14 | Pump valve | ✔ | ✔ | ✔ | ✔ | ✔ | ✔ | ✔ | ✔ | ✔ |
| 15 | DHW tank | ✔ | ✔ | ✔ | ✔ | ✔ | ✔ | ✔ | ✔ | ✔ |
| 16 | Plate heat exchanger (Water - Water) | ✔ | ✔ | ✔ | ✔ | ✔ | ✔ | ✔ | ✔ | ✔ |
| 17 | Scale trap | ✔ | ✔ | ✔ | ✔ | ✔ | ✔ | ✔ | ✔ | ✔ |
| 18 | Water circulation pump (Sanitary circuit) | ✔ | ✔ | ✔ | ✔ | ✔ | ✔ | ✔ | ✔ | ✔ |
| 19 | Immersion heater | — | — | — | — | — | — | — | — | — |
| 20 | Temperature and pressure relief valve | — | — | — | — | — | — | — | — | — |
| 21 | Pressure relief valve (10 bar) (DHW Tank) | ✔ | ✔ | ✔ | ✔ | ✔ | ✔ | ✔ | ✔ | ✔ |
| 22 | Drain cock (DHW tank) | ✔ | ✔ | ✔ | ✔ | ✔ | ✔ | ✔ | ✔ | ✔ |
| 23 | Drain cock (Sanitary circuit) | ✔ | ✔ | ✔ | ✔ | ✔ | ✔ | ✔ | ✔ | ✔ |
| 24 | Flow water temp. thermistor (THW1) | ✔ | ✔ | ✔ | ✔ | ✔ | ✔ | ✔ | ✔ | ✔ |
| 25 | Return water temp. thermistor (THW2) | ✔ | ✔ | ✔ | ✔ | ✔ | ✔ | ✔ | ✔ | ✔ |
| 26 | DHW tank upper water temp. thermistor (THW5A) | ✔ | ✔ | ✔ | ✔ | ✔ | ✔ | ✔ | ✔ | ✔ |
| 27 | DHW tank lower water temp. thermistor (THW5B) | ✔ | ✔ | ✔ | ✔ | ✔ | ✔ | ✔ | ✔ | ✔ |
| 28 | Refrigerant liquid temp. thermistor (TH2) | ✔ | ✔ | ✔ | ✔ | ✔ | ✔ | ✔ | ✔ | ✔ |
| 29 | Pressure sensor | ✔ | ✔ | ✔ | — | — | — | ✔ | ✔ | ✔ |
| 30 | Drain pan | — | — | — | — | — | — | ✔ | ✔ | ✔ |
| 31 | Outdoor unit | — | — | — | — | — | — | — | — | — |
| 32 | Drain pipe (Local supply) | — | — | — | — | — | — | — | — | — |
| 33 | Back flow prevention device (Local supply) | — | — | — | — | — | — | — | — | — |
| 34 | Isolating valve (Local supply) | — | — | — | — | — | — | — | — | — |
| 35 | Magnetic filter (Local supply) (Recommended) | — | — | — | — | — | — | — | — | — |
| 36 | Strainer (Local supply) | — | — | — | — | — | — | — | — | — |
| 37 | Pressure relief valve (3 bar - In outdoor unit) | — | — | — | — | — | — | — | — | — |
| 38 | Inlet control group *1 | — | — | — | — | — | — | — | — | — |
| 39 | Filling loop (Ball valves, check valves and flexible hose) *1 | — | — | — | — | — | — | — | — | — |
| 40 | Potable expansion vessel *1 | — | — | — | — | — | — | — | — | — |
| 41 | Air vent (Local supply) | — | — | — | — | — | — | — | — | — |
| 42 | Pressure relief valve (5 bar) | ✔ | — | — | ✔ | — | — | ✔ | ✔ | — |
| 43 | Water circulation pump 2 (Zone1) | — | — | — | — | — | — | — | ✔ | — |
| 44 | Water circulation pump 3 (Zone2) | — | — | — | — | — | — | — | ✔ | — |
| 45 | Mixing valve | — | — | — | — | — | — | — | ✔ | — |
| 46 | Magnetic filter | — | — | — | — | — | — | — | ✔ | — |
| 47 | Mud trap | — | — | — | — | — | — | — | ✔ | — |
| 48 | Flow zone1 water temp. thermistor (THW6) | — | — | — | — | — | — | — | ✔ | — |
| 49 | Return zone1 water temp. thermistor (THW7) | — | — | — | — | — | — | — | ✔ | — |
| 50 | Flow zone2 water temp. thermistor (THW8) | — | — | — | — | — | — | — | ✔ | — |
| 51 | Return zone2 water temp. thermistor (THW9) | — | — | — | — | — | — | — | ✔ | — |
| 52 | Header | — | — | — | — | — | — | — | ✔ | — |

*1 Supplied with UK model ONLY. Please refer to PAC-WK02UK-E Installation Manual for more information on accessories.
*2 Attachment the part to the position of 3 bar PRV for E*ST20 series. (Refer to *b of the Figure 4.5.9)
*3 Attachment the part to the position of 3 bar PRV for E*ST30 series. (Refer to *b of the Figure 4.5.9)

<Table 4.5.1>

| No. | Part name | ERST20C-*M*D | ERST30C-*M*ED | EHPT17/20X-*M*D | EHPT20/30X-*M*ED | EHPT20/30X-MED | ERPT17/20X-*M*D | ERPT20X-MD | ERPT30X-VM*ED | EHPT20X-MHEDW |
|---|---|---|---|---|---|---|---|---|---|---|
| A | DHW outlet pipe | ✔ | ✔ | ✔ | ✔ | ✔ | ✔ | ✔ | ✔ | ✔ |
| B | Cold water inlet pipe | ✔ | ✔ | ✔ | ✔ | ✔ | ✔ | ✔ | ✔ | ✔ |
| C | Water pipe (Space heating/cooling return connection) | ✔ | ✔ | ✔ | ✔ | ✔ | ✔ | ✔ | ✔ | ✔ |
| D | Water pipe (Space heating/cooling flow connection) | ✔ | ✔ | ✔ | ✔ | ✔ | ✔ | ✔ | ✔ | ✔ |
| E | Water pipe (Flow from heat pump connection) | — | — | ✔ | ✔ | ✔ | ✔ | ✔ | ✔ | ✔ |
| F | Water pipe (Return to heat pump connection) | — | — | ✔ | ✔ | ✔ | ✔ | ✔ | ✔ | ✔ |
| G | Refrigerant pipe (Gas) | ✔ | ✔ | — | — | — | — | — | — | — |
| H | Refrigerant pipe (Liquid) | ✔ | ✔ | — | — | — | — | — | — | — |
| 1 | Control and electrical box | ✔ | ✔ | ✔ | ✔ | ✔ | ✔ | ✔ | ✔ | ✔ |
| 2 | Main remote controller | ✔ | ✔ | ✔ | ✔ | ✔ | ✔ | ✔ | ✔ | ✔ |
| 3 | Plate heat exchanger (Refrigerant - Water) | ✔ | ✔ | — | — | — | — | — | — | — |
| 4 | Booster heater 1,2 | ✔ | ✔ | ✔ | ✔ | — | ✔ | — | ✔ | — |
| 5 | 3-way valve | ✔ | ✔ | ✔ | ✔ | ✔ | ✔ | ✔ | ✔ | ✔ |
| 6 | Drain cock (Primary circuit) | ✔ | ✔ | ✔ | ✔ | ✔ | ✔ | ✔ | ✔ | ✔ |
| 7 | Manometer | ✔ | ✔ | ✔ | ✔ | ✔ | ✔ | ✔ | ✔ | ✔ |
| 8 | Pressure relief valve (3 bar) | ✔ *2 | ✔ *3 | — | — | — | — | — | — | — |
| 9 | Automatic air vent | ✔ | ✔ | ✔ | ✔ | ✔ | ✔ | ✔ | ✔ | ✔ |
| 10 | Expansion vessel (Primary circuit) | ✔ | — | ✔ | — | — | ✔ | ✔ | — | — |
| 11 | Flow sensor | ✔ | ✔ | ✔ | ✔ | ✔ | ✔ | ✔ | ✔ | ✔ |
| 12 | Strainer valve | ✔ | ✔ | ✔ | ✔ | ✔ | ✔ | ✔ | ✔ | ✔ |
| 13 | Water circulation pump 1 (Primary circuit) | ✔ | ✔ | ✔ | ✔ | ✔ | ✔ | ✔ | ✔ | ✔ |
| 14 | Pump valve | ✔ | ✔ | ✔ | ✔ | ✔ | ✔ | ✔ | ✔ | ✔ |
| 15 | DHW tank | ✔ | ✔ | ✔ | ✔ | ✔ | ✔ | ✔ | ✔ | ✔ |
| 16 | Plate heat exchanger (Water - Water) | ✔ | ✔ | ✔ | ✔ | ✔ | ✔ | ✔ | ✔ | ✔ |
| 17 | Scale trap | ✔ | ✔ | ✔ | ✔ | ✔ | ✔ | ✔ | ✔ | ✔ |
| 18 | Water circulation pump (Sanitary circuit) | ✔ | ✔ | ✔ | ✔ | ✔ | ✔ | ✔ | ✔ | ✔ |
| 19 | Immersion heater | — | — | — | — | — | — | — | — | ✔ |
| 20 | Temperature and pressure relief valve | — | — | — | — | — | — | — | — | ✔ |
| 21 | Pressure relief valve (10 bar) (DHW Tank) | ✔ | ✔ | ✔ | ✔ | ✔ | ✔ | ✔ | ✔ | — |
| 22 | Drain cock (DHW tank) | ✔ | ✔ | ✔ | ✔ | ✔ | ✔ | ✔ | ✔ | ✔ |
| 23 | Drain cock (Sanitary circuit) | ✔ | ✔ | ✔ | ✔ | ✔ | ✔ | ✔ | ✔ | ✔ |
| 24 | Flow water temp. thermistor (THW1) | ✔ | ✔ | ✔ | ✔ | ✔ | ✔ | ✔ | ✔ | ✔ |
| 25 | Return water temp. thermistor (THW2) | ✔ | ✔ | ✔ | ✔ | ✔ | ✔ | ✔ | ✔ | ✔ |
| 26 | DHW tank upper water temp. thermistor (THW5A) | ✔ | ✔ | ✔ | ✔ | ✔ | ✔ | ✔ | ✔ | ✔ |
| 27 | DHW tank lower water temp. thermistor (THW5B) | ✔ | ✔ | ✔ | ✔ | ✔ | ✔ | ✔ | ✔ | ✔ |
| 28 | Refrigerant liquid temp. thermistor (TH2) | ✔ | ✔ | — | — | — | — | — | — | — |
| 29 | Pressure sensor | — | — | — | — | — | — | — | — | — |
| 30 | Drain pan | ✔ | ✔ | — | — | — | ✔ | ✔ | ✔ | — |
| 31 | Outdoor unit | — | — | — | — | — | — | — | — | — |
| 32 | Drain pipe (Local supply) | — | — | — | — | — | — | — | — | — |
| 33 | Back flow prevention device (Local supply) | — | — | — | — | — | — | — | — | — |
| 34 | Isolating valve (Local supply) | — | — | — | — | — | — | — | — | — |
| 35 | Magnetic filter (Local supply) (Recommended) | — | — | — | — | — | — | — | — | — |
| 36 | Strainer (Local supply) | — | — | — | — | — | — | — | — | — |
| 37 | Pressure relief valve (3 bar - In outdoor unit) | — | — | ✔ | ✔ | ✔ | ✔ | ✔ | ✔ | ✔ |
| 38 | Inlet control group *1 | — | — | — | — | — | — | — | — | — |
| 39 | Filling loop (Ball valves, check valves and flexible hose) *1 | — | — | — | — | — | — | — | — | — |
| 40 | Potable expansion vessel *1 | — | — | — | — | — | — | — | — | — |
| 41 | Air vent (Local supply) | — | — | — | — | — | — | — | — | — |
| 42 | Pressure relief valve (5 bar) | ✔ | — | ✔ | — | — | ✔ | ✔ | — | — |
| 43 | Water circulation pump 2 (Zone1) | — | — | — | — | — | — | — | — | — |
| 44 | Water circulation pump 3 (Zone2) | — | — | — | — | — | — | — | — | — |
| 45 | Mixing valve | — | — | — | — | — | — | — | — | — |
| 46 | Magnetic filter | — | — | — | — | — | — | — | — | — |
| 47 | Mud trap | — | — | — | — | — | — | — | — | — |
| 48 | Flow zone1 water temp. thermistor (THW6) | — | — | — | — | — | — | — | — | — |
| 49 | Return zone1 water temp. thermistor (THW7) | — | — | — | — | — | — | — | — | — |
| 50 | Flow zone2 water temp. thermistor (THW8) | — | — | — | — | — | — | — | — | — |
| 51 | Return zone2 water temp. thermistor (THW9) | — | — | — | — | — | — | — | — | — |
| 52 | Header | — | — | — | — | — | — | — | — | — |

*1 Supplied with UK model ONLY. Please refer to PAC-WK02UK-E Installation Manual for more information on accessories.
*2 Attachment the part to the position of 3 bar PRV for E*ST20 series. (Refer to *b of the Figure 4.5.9)
*3 Attachment the part to the position of 3 bar PRV for E*ST30 series. (Refer to *c of the Figure 4.5.9)

<Table 4.5.2>

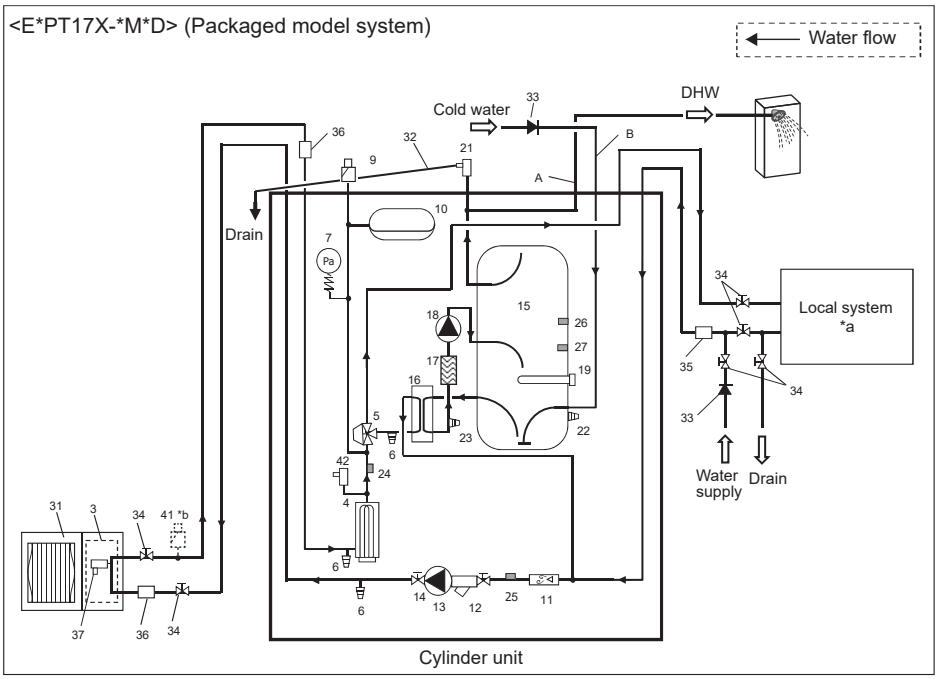


<Figure 4.5.2>

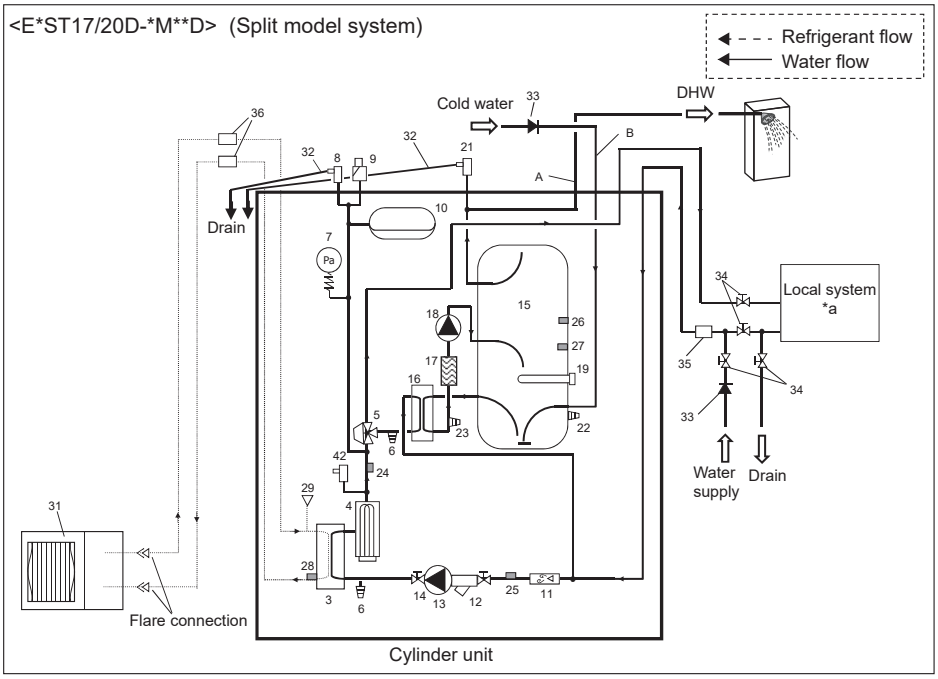


<Figure 4.5.3>

*a Refer to the following section '4.5.2 Local system'.
*b If the outdoor unit is higher than the indoor unit, or if there is a location where air gets trapped in the upper part of the water pipe, consider adding this part.

Note
- To enable draining of the cylinder unit an isolating valve should be positioned on both the inlet and outlet pipework.
- Be sure to install a strainer on the inlet pipework to the cylinder unit.
- Suitable drain pipework should be attached to the relief valve(s) instructed to be connected to it in Figure 4.5.2 and 4.5.3 in accordance with your country's regulations.
- A backflow prevention device must be installed on the cold water supply pipework (IEC 61770)
- When using components made from different metals or connecting pipes made of different metals insulate the joints to prevent any corrosive reaction taking place which may damage the pipework.)

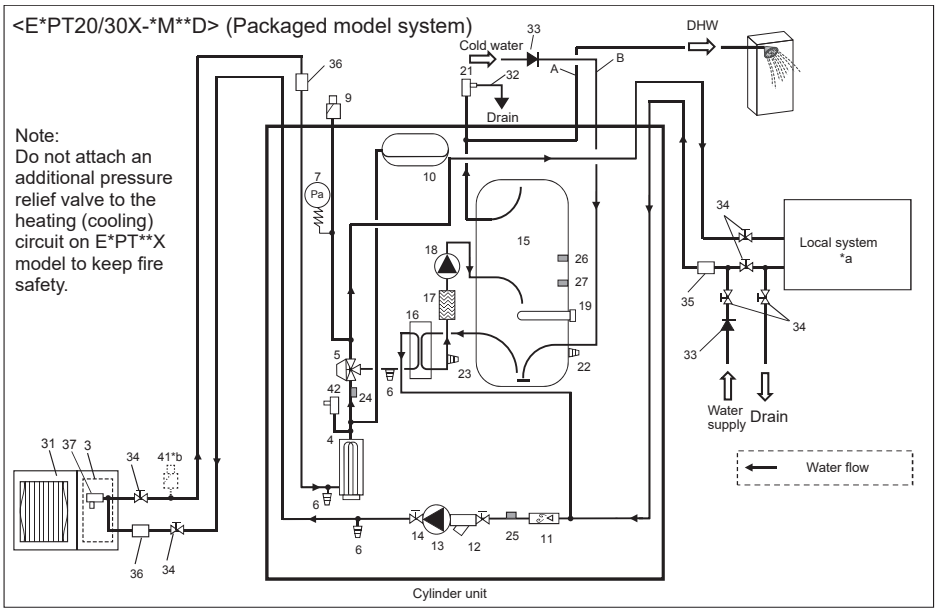


<Figure 4.5.4>

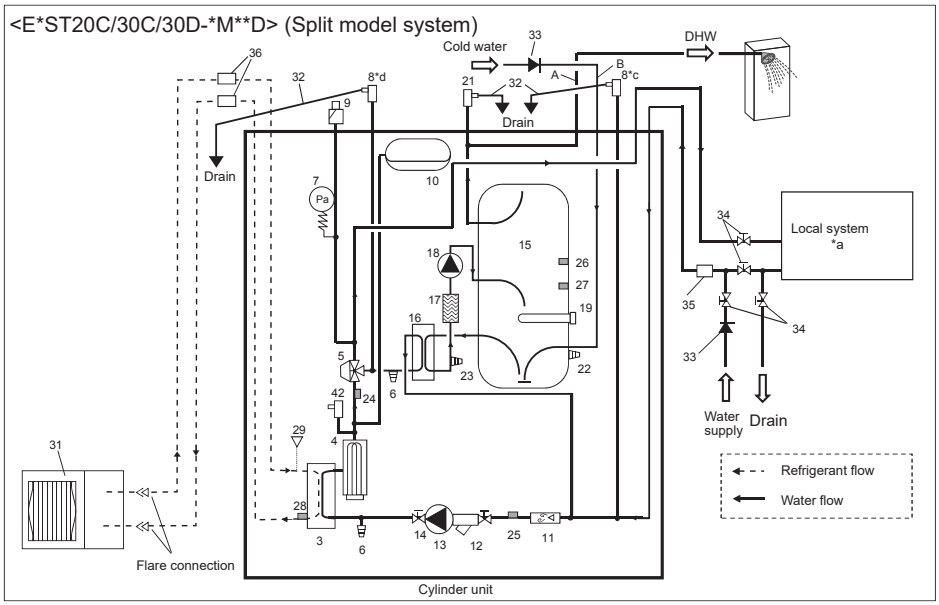


<Figure 4.5.5>

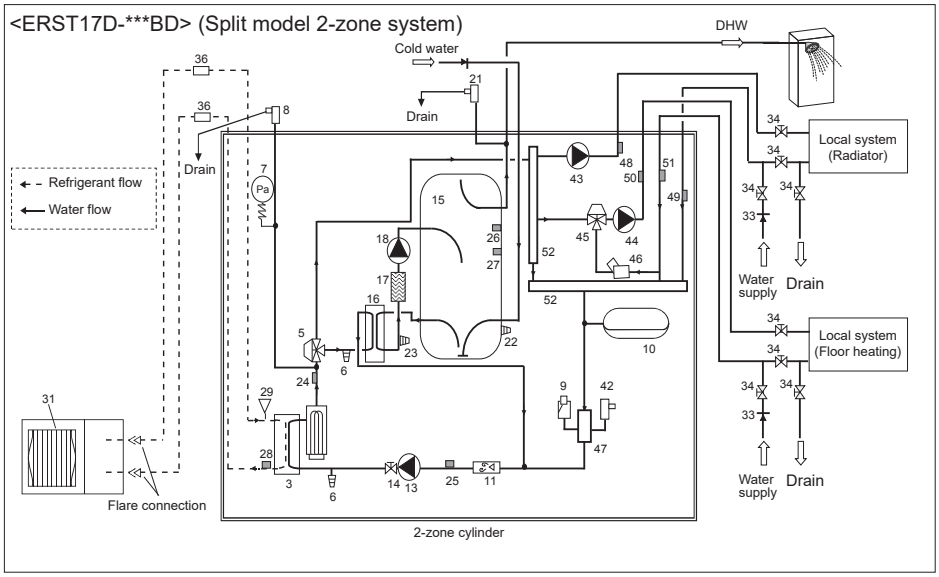


<Figure 4.5.6>

Go to the Mitsubishi website to check the water circuit of other units and the component parts of each unit.

*a Refer to the following section [Local system].
*b If the outdoor unit is higher than the indoor unit, or if there is a location where air gets trapped in the upper part of the water pipe, consider adding this part.
*c E**T20 only
*d E**T30 only

Notes
- To enable draining of the cylinder unit an isolating valve should be positioned on both the inlet and outlet pipework.
- Be sure to install a strainer on the inlet pipework to the cylinder unit.
- Suitable drain pipework should be attached to the relief valves instructed to be connected to it in Figures 4.5.4, 4.5.5 and 4.5.6 in accordance with your country's regulations.
- A backflow prevention device must be installed on the cold water supply pipework (IEC 61770)
- When using components made from different metals or connecting pipes made of different metals insulate the joints to prevent any corrosive reaction taking place which may damage the pipework.

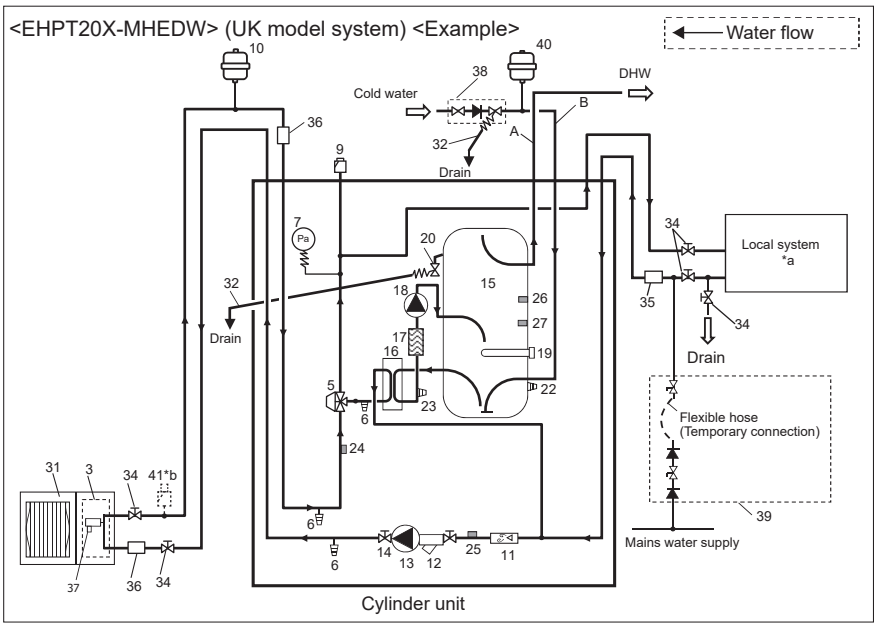


<Figure 4.5.7>

*a Refer to the following section '4.5.2 Local system'.

Note (Figure 4.5.7)
- To enable draining of the cylinder unit an isolating valve should be positioned on both the inlet and outlet pipework. No valve should be fitted between the expansion valve (item 38) and the cylinder unit (safety matter).
- For space heating (primary) circuit a suitable expansion vessel **MUST** be supplied and fitted by installer. (See figure 4.5.7)
- Be sure to install a strainer on the inlet pipework to the cylinder unit.
- Suitable drain pipework should be attached to the relief valve instructed to be connected to it in Figure 4.5.7 in accordance with your country's regulations.
- When using components made from different metals or connecting pipes made of different metals insulate the joints to prevent any corrosive reaction taking place which may damage any pipework.
- Filling loop's flexible hose must be removed following the filling procedure. Item provided with unit as loose accessory.
- Install the inlet control group (item 38) above the level of the T&P relief valve (item 20). This will ensure DHW tank will not require drain down to service/maintain the inlet control group.

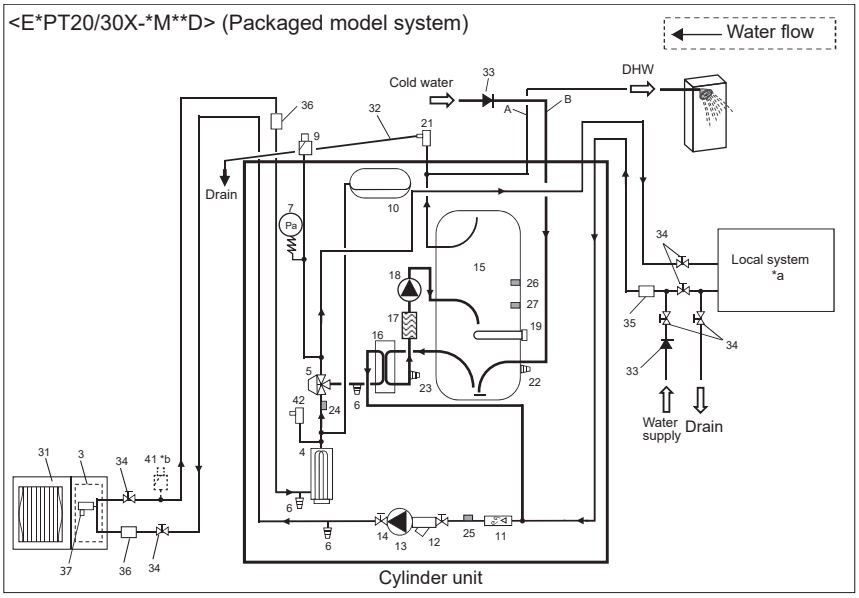


<Figure 4.5.8>

*a Refer to the following section '4.5.2 Local system'.
*b E**T20 only
*c E**T30 only

Note (Figure 4.5.8) (Figure 4.5.9)
- To enable draining of the cylinder unit an isolating valve should be positioned on both the inlet and outlet pipework.
- Be sure to install a strainer on the inlet pipework to the cylinder unit.
- Suitable drain pipework should be attached to the relief valve(s) instructed to be connected to it in Figure 4.5.8 and 4.5.9 in accordance with your country's regulations.
- A backflow prevention device must be installed on the cold water supply pipework (IEC 61770)
- When using components made from different metals or connecting pipes made of different metals insulate the joints to prevent any corrosive reaction taking place which may damage the pipework.

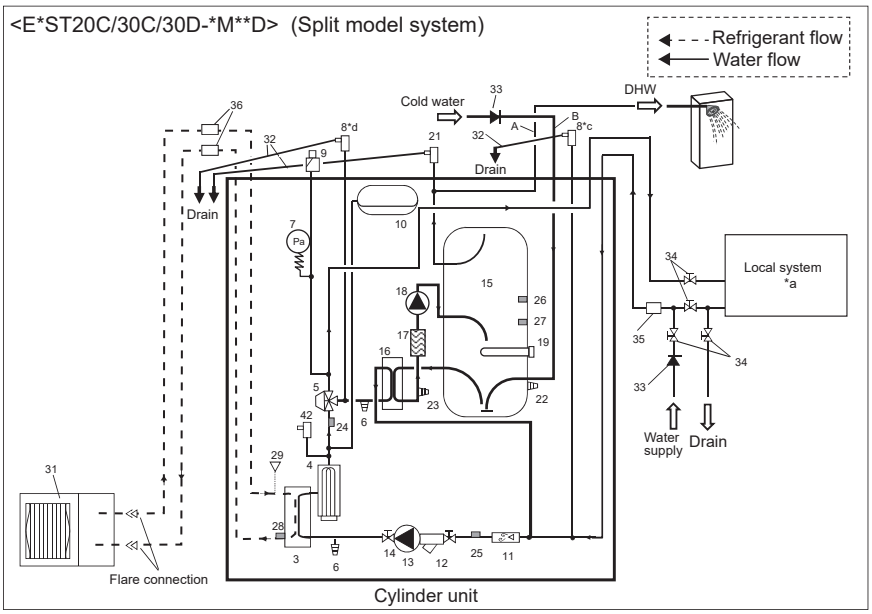


<Figure 4.5.9>

### 4.5.2 Local system

**1-zone temperature control**

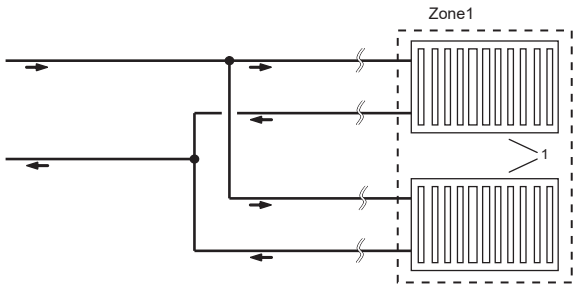


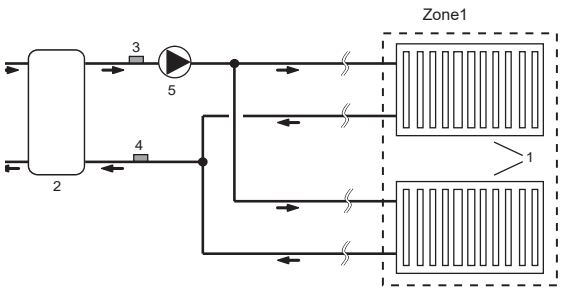


**2-zone temperature control**

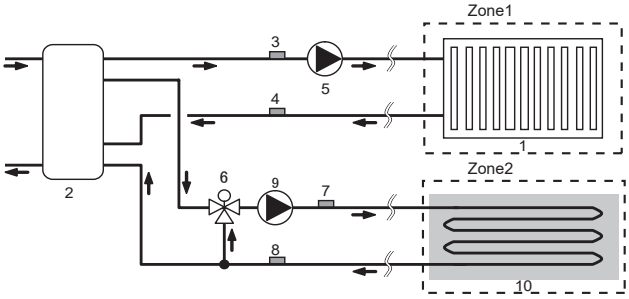


**1-zone temperature control with boiler**

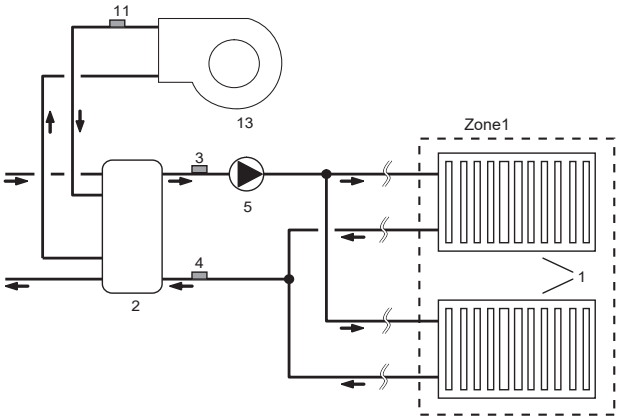


**2-zone temperature control & Buffer tank control**

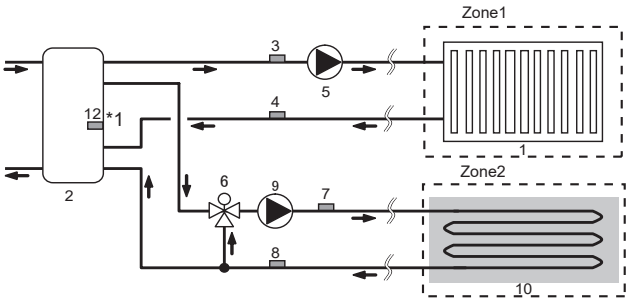


**1-zone temperature control (2-zone valve ON/OFF control)**

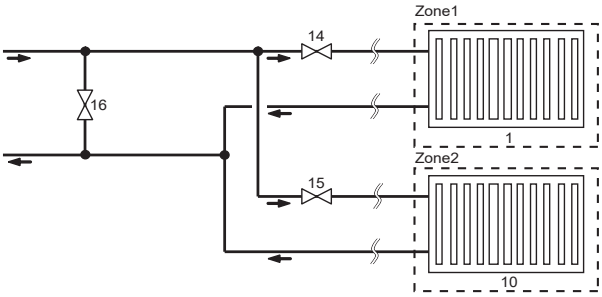


1. Zone1 heat emitters (e.g. radiator, fan coil unit) (local supply)
2. Mixing tank (local supply)
3. Zone1 flow water temp. thermistor (THW6) } Optional part : PAC-TH011-E
4. Zone1 return water temp. thermistor (THW7)
5. Zone1 water circulation pump (local supply)
6. Motorized mixing valve (local supply)
7. Zone2 flow water temp. thermistor (THW8) } Optional part : PAC-TH011-E
8. Zone2 return water temp. thermistor (THW9)
9. Zone2 water circulation pump (local supply)
10. Zone2 heat emitters (e.g. underfloor heating) (local supply)
11. Boiler flow water temp. thermistor (THWB1) } Optional part : PAC-TH012HT(L)-E
12. Mixing tank thermistor (THW10) *1
13. Boiler (local supply)
14. Zone1 2-way valve (local supply)
15. Zone2 2-way valve (local supply)
16. Bypass valve (local supply)

*1 ONLY Buffer tank control (heating/cooling) applies to "Smart grid ready".

## 4.6. Installation

### <Preparation before the installation and service>

- Prepare the proper tools.
- Prepare the proper protection.
- Allow parts to cool before attempting any maintenance.
- Provide adequate ventilation.
- After stopping the operation of the system, turn off the power-supply breaker and remove the power plug.
- Discharge the capacitor before commencing work involving the electric parts.

### <Precautions during service>

- Do not perform work involving electric parts with wet hands.
- Do not pour water or liquid into the electric parts.
- Do not touch the refrigerant.
- Do not touch the hot or cold surfaces in the refrigerant cycle.
- When the repair or the inspection of the circuit needs to be carried out without turning off the power, exercise great caution NOT to touch any LIVE parts.



### 4.6.1 Location

#### ■ Transportation and Handling

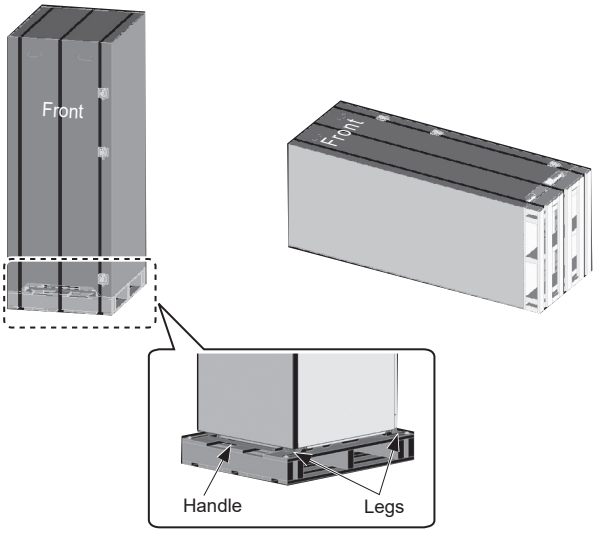


<Figure 4.6.1>

Cylinder unit is delivered on a wooden pallet base with cardboard protection.

Care should be taken when transporting the cylinder unit that the casing is not damaged by impact. Do not remove the protective packaging until cylinder unit has reached its final location. This will help protect the structure and control panel.

- The cylinder unit can be transported either vertically or horizontally. If transported horizontally the panel marked 'Front' must be facing **UPWARDS** <Figure 4.6.1>.
- The cylinder unit should ALWAYS be moved by a minimum of 3 people.
- When carrying the cylinder unit use the handles provided.
- Before using the handles, make sure they are securely attached.
- **Please remove front handle, fixing legs, wooden base and any other packaging once the unit is in installation location.**
- **Keep the handles for future transportation.**

#### ■ Suitable Location

Before installation the cylinder unit should be stored in a frost-free weather-proof location. Units must **NOT** be stacked.

- The cylinder unit should be installed indoors in a frost free weather proof location.
- Install the cylinder unit where it is not exposed to water/excessive moisture.
- The cylinder unit should be positioned on a level surface capable of supporting it's **FILLED** weight. (Adjustable feet (accessory parts) can be used to ensure unit is level)
- When using the adjustable feet, ensure that the floor is strong enough.
- Care should be taken that minimum distances around and in front of the unit for service access are observed <Figure 4.6.2>.
- Secure the cylinder unit to prevent it being knocked over.
- Please be careful not to break the insulation attached to the unit.

#### ■ Service access diagrams

| Service access | |
|---|---|
| Parameter | Dimension (mm) |
| a | 300* |
| b | 150 |
| c (distance behind unit not visible in Figure 4.6.2) | 10 |
| d | 500 |

<Table 4.6.1>

Sufficient space MUST be left for the provision of discharge pipework as detailed in National and Local Building Regulations.

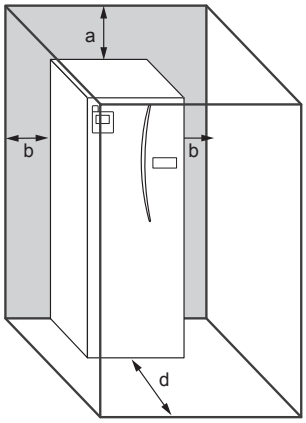


* An additional 300 mm of space (total 600 mm) is required , when installing the optional 2-zone kit (PAC-TZ02-E) on top of the cylinder unit.

<Figure 4.6.2>
Service access

The cylinder unit must be located indoors and in a frost-free environment, for example in a utility room, to minimise heat loss from stored water.

#### ■ Repositioning

If you need to move the cylinder unit to a new position FULLY DRAIN the cylinder unit before moving to avoid damage to the unit.

## 4.6.2 Water Quality and System Preparation

### ■ General

- The water in primary and sanitary circuit should be clean and with pH value of following condition.
  Primary circuit: pH6.5-10.0
  Sanitary circuit: pH6.5-8.0
- The followings are the maximum values;
  Calcium: 100 mg/L, Ca hardness: 250 mg/L
  Chloride: 100 mg/L, Copper: 0.3 mg/L
- Other constituents should be to European Directive 98/83 EC standards.
- In known hard water areas, to prevent/minimise scaling, it is beneficial to restrict the routine stored water temperature (DHW max. temp.) to 55°C.

### ■ Anti-Freeze

Anti-freeze solutions should use propylene glycol with a toxicity rating of Class 1 as listed in Clinical Toxicology of Commercial Products, 5th Edition.

**Notes:**

**1. Ethylene glycol is toxic and should NOT be used in the primary water circuit in case of any cross-contamination of the potable circuit.**

**2. For 2-zone valve ON/OFF control, propylene glycol should be used.**

### ■ New Installation (primary water circuit)

- Before connecting outdoor unit, thoroughly cleanse pipework of building debris, solder etc using a suitable chemical cleansing agent.
- Flush the system to remove chemical cleanser.
- For all packaged model systems add a combined inhibitor and anti-freeze solution to prevent damage to the pipework and system components.
- For split model systems the responsible installer should decide if anti-freeze solution is necessary for each site's conditions. Corrosion inhibitor however should ALWAYS be used.

### ■ Existing Installation (primary water circuit)

- Before connecting outdoor unit the existing heating circuit MUST be chemically cleansed to remove existing debris from the heating circuit.
- Flush the system to remove chemical cleanser.
- For all packaged model systems, and the split model or PUMY system without booster heater, add a combined inhibitor and anti-freeze solution to prevent damage to the pipework and system components.
- For split model systems the responsible installer should decide if anti-freeze solution is necessary for each site's conditions. Corrosion inhibitor however should ALWAYS be used.

When using chemical cleansers and inhibitors always follow manufacturer's instructions and ensure the product is appropriate for the materials used in the water circuit

### ■ Minimum amount of water required in the space heating/cooling circuit

| Outdoor heat pump unit | | Indoor unit containing water amount [L] | *Additional required water amount [L] | |
|---|---|---|---|---|
| | | | Average / Warmer climate** | Colder climate** |
| Packaged model | PUZ-WM50 | 5 | 2 | 24 |
| | PUZ-WM60 | | 4 | 29 |
| | PUZ-WM85 | | 7 | 32 |
| | PUZ-WM112 | | 11 | 43 |
| | PUZ-HWM140 | | 15 | 55 |
| Split model SUZ series | SUZ-SWM40VA | 5 | 1 | 12 |
| | SUZ-SWM60VA | | 2 | 21 |
| | SUZ-SWM80VA | | 4 | 29 |
| | SUZ-SWM30VA | | 5 *** | 12 *** |
| | SUZ-SWM40VA2(-SC) | | 5 *** | 12 *** |
| | SUZ-SWM60VA2(-SC) | | 9 *** | 21 *** |
| | SUZ-SWM80VA(H)2 | | 12 *** | 29 *** |
| | SUZ-SWM100VA(H) | | 12 *** | 38 *** |
| | SUZ-SHWM30VAH | | 9 *** | 21 *** |
| | SUZ-SHWM40VAH(-SC) | | 9 *** | 21 *** |
| | SUZ-SHWM60VAH(-SC) | | 12 *** | 29 *** |
| Split model PUD series | PUD-S(H)WM60 | 5 | 4 | 21 |
| | PUD-S(H)WM80 | | 6 | 29 |
| | PUD-S(H)WM100 | | 10 | 38 |
| | PUD-S(H)WM120 | | 12 | 47 |
| | PUD-SHWM140 | | 15 | 55 |
| Split model PUZ series | PUZ-S(H)WM60 | 5 | 4 | 21 |
| | PUZ-S(H)WM80 | | 6 | 29 |
| | PUZ-S(H)WM100 | | 9 | 38 |
| | PUZ-S(H)WM120 | | 12 | 47 |
| | PUZ-S(H)WM140 | | 15 | 55 |
| Split model PUHZ series | PUHZ-SW75 | 5 | 6 | 37 |
| | PUHZ-SW100 | | 9 | 38 |
| | PUHZ-SW120 | | 12 | 47 |
| | PUHZ-SHW80 | | 6 | 29 |
| | PUHZ-SHW112 | | 11 | 43 |
| | PUHZ-SHW140 | | 15 | 55 |
| Split model Multi series | PUHZ-FRP71 | 5 | 6 | 27 |
| | PUMY-P112 | | 22 | 75 |
| | PUMY-P125 | | 22 | 75 |
| | PUMY-P140 | | 22 | 75 |
| | PXZ-4F75VG | | 6 | 27 |
| | PXZ-5F85VG | | 6 | 29 |

<Table 4.6.2>

* Water amount: If there is a bypass circuit, above table means minimum water amount in case of bypass.

** Climate: Please refer to 2009/125/EC: Energy-related Products Directive and Regulation (EU) No 813/2013 to confirm your climate zone.

*** SUZ series: Flow temperature MUST always be NO lower than 32 °C when outdoor temperature drops below -15 °C.
Potential risks of plate HEX get frozen and damaged, and also outdoor HEX would be frosted due to insufficient defrosting.

Case 1. No division between primary and secondary circuit

- Please ensure the required water amount according to the table 4.6.2 by water pipe and radiator or underfloor heating.

Case 2. Separate primary and secondary circuit

- If the interlock operation of primary and secondary pump is not available, please ensure required additional water in only primary circuit according to the table 4.6.2.
- If the interlock operation of primary and secondary pump is available, please ensure total water amount of primary and secondary circuit according to the table 4.6.2.

In case of the shortage of required water amount, please install buffer tank.

### 4.6.3 Water Pipe Work

## ■ Hot Water Pipework

**The cylinder unit is UNVENTED.** When installing unvented hot water systems building regulations part G3 (England and Wales), P3 (Scotland) and P5 (Northern Ireland) should be adhered to. If outside of the UK please adhere to your own country's regulations for unvented hot water systems.

Connect the flow for the DHW to pipe A (Figure 4.5.1).
The function of the following safety components of the cylinder unit should be checked on installation for any abnormalities;
• Pressure relief valve (Primary circuit and Tank)
• Expansion vessel pre-charge (gas charge pressure)

The instruction on the following pages regarding safe discharge of hot water from Safety devices should be followed carefully.
• The pipework will become very hot, so should be insulated to prevent burns.
• When connecting pipework, ensure that no foreign objects such as debris or the like enter the pipe.

## ■ Cold Water Pipework

Cold water to the suitable standard (see section 4.6.2) should be introduced to the system by connecting pipe B (Figure 4.5.1) using appropriate fittings.

## ■ Negative pressure prevention

To prevent negative pressure effecting DHW tank, installer should install appropriate pipework or use appropriate devices.

## ■ Hydraulic filter work (ONLY E*PT series)

Install a hydraulic filter or strainer (local supply) at the water intake ("Pipe E" in Figure 4.5.1)

## ■ Pipework Connections

Connections to the cylinder unit should be made using the 22 mm or 28 mm compression as appropriate.
When connecting DHW pipes using compression fittings, insert **copper liner for DHW pipe** (accessory parts) into the pipes and tighten them from 0.75 to 1.25 turns.
Do not over-tighten compression fittings as this will lead to deformation of the olive ring and potential leaks.
**Note: Before brazing pipes in the field, protect pipes on the cylinder unit using wet towels etc as "heat shield".**

## ■ Insulation of Pipework

• All exposed water pipework should be insulated to prevent unnecessary heat loss and condensation. To prevent condensate entering the cylinder unit, the pipework and connections at the top of the cylinder unit should be carefully insulated.
• Cold and hot water pipework should not be run close together where possible, to avoid unwanted heat transfer.
• Pipework between outdoor heat pump unit and cylinder unit should be insulated with suitable pipe insulation material with a thermal conductivity of ≤ 0.04 W/m.K.

## ■ Drain Pipework (ONLY ER series)

The optional part 'Drain pan stand' does not need to be set because the drain pan is installed.The drain should be set from the drain socket at left rear of the unit.
The drain pipe should be installed to drain condensed water during cooling mode.
• To prevent dirty water from draining directly onto the floor next to cylinder unit, please connect appropriate discharge pipework from the cylinder drain pan.
• Securely install the drain pipe to prevent leakage from the connection.
• Securely insulate the drain pipe to prevent water dripping from the locally supplied drain pipe.
• Install the drain pipe at a down slope of 1/100 or more.
• Do not place the drain pipe in drain channel where sulphuric gas exists.
• After installation, check that the drain pipe drains water properly from the outlet of the pipe to suitable discharge location.
• The drain hose should be connected to the drainage hole that is in the room.

<Installation>
1. The drain socket (inside diameter 26mm) is left rear of the cylinder unit. (Figure 4.6.3)
2. Fix the drain pipe (VP-20) which fits the drain socket with the polyvinyl chloride type adhesive.
3. Set the drain pipework up to the outlet with the down grade of more than one hundredth.

Note: Securely support the locally supplied drain pipe to avoid the drain pipe falling from the drain socket.

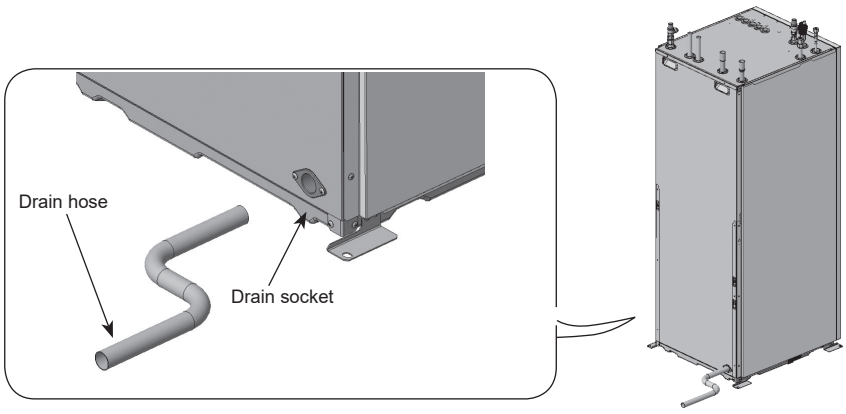


<Figure 4.6.3>

## ■ Sizing Expansion Vessels

Expansion vessel volume must fit the local system water volume.
To size an expansion vessel for the heating circuit the following formula and graph can be used.
When the necessary expansion vessel volume exceeds the volume of an built-in expansion vessel, install an additional expansion vessel so that the sum of the volumes of the expansion vessels exceeds the necessary expansion vessel volume.

* For installation of an E**T***-*M*ED* model, provide and install a suitable primary-side expansion vessel and additional 3 bar rated pressure relief valve in the field as the model **DOES NOT** come fitted with a primary-side expansion vessel.

$$V = \frac{\varepsilon \times G}{1 - \frac{P_1 + 0.098}{P_2 + 0.098}}$$

Where;
- V : Necessary expansion vessel volume [L]
- ε : Water expansion coefficient
- G : Total volume of water in the system [L]
- $P_1$ : Expansion vessel setting pressure [MPa]
- $P_2$ : Max. pressure during operation [MPa]

Graph to the right is for the following values

- ε : at 70°C = 0.0229
- $P_1$ : 0.1 MPa
- $P_2$ : 0.3 MPa

*A 30% safety margin has been added.

**Expansion vessel sizing**

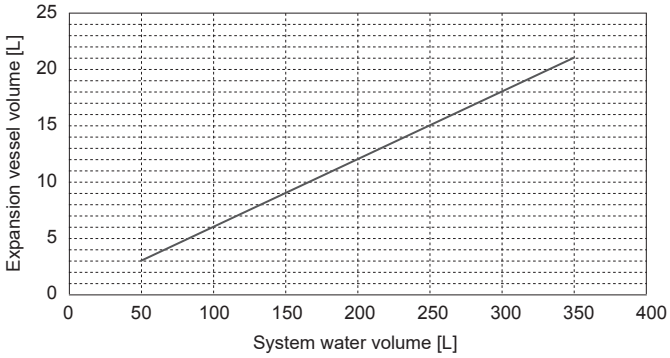


<Figure 4.6.4>

## ■ Drain hose connection from left side

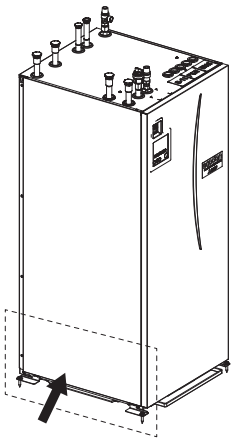

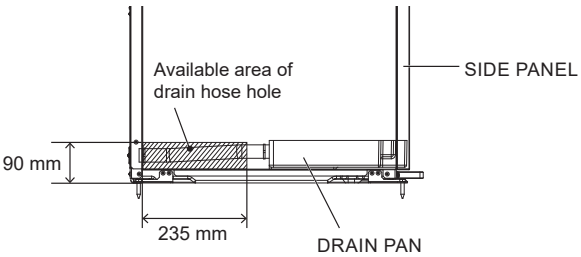


<Note>
Please make a hole to come out drain hose (φ32) within this area.
* Please note that bigger hole will deteriorate insulation and sound level.

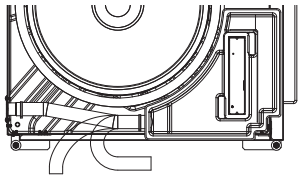

<Note>
Please secure at least R70 (inside R54) when bending a hose.

## 4.6.4 Water Circulation Pump Characteristics

### (1) Primary circuit

Pump speed can be selected by main remote controller setting (see <Figure 4.6.5> ).

Adjust the pump speed setting so that the flow rate in the primary circuit is appropriate for the outdoor unit installed (see Table 4.6.3). It may be necessary to add an additional pump to the system depending on the length and lift of the primary circuit.

For outdoor unit model not listed in the <Table 4.6.3>, refer to Water flow rate range in the specification table of outdoor unit Data Book.

<Second pump >

If a second pump is required for the installation please read the following carefully. If a second pump is used in the system it can be positioned in 2 ways.

The position of the pump influences which terminal of the FTC the signal cable should be wired to. If the additional pump(s) have current greater than 1A please use appropriate relay. Pump signal cable can either be wired to TBO.1 1-2 or CNP1 but NOT both.

Option 1 (Space heating/cooling only)

If the second pump is being used for the heating circuit only then the signal cable should be wired to TBO.1 terminals 3 and 4 (OUT2). In this position the pump can be run at a different speed to the cylinder unit's in-built pump.

Option 2 (Primary circuit DHW and space heating/cooling)

If the second pump is being used in the primary circuit between the cylinder unit and the outdoor unit (Package system ONLY) then the signal cable should be wired to TBO.1 terminals 1 and 2 (OUT1). In this position the pump speed **MUST** match the speed of the cylinder unit's in-built pump.

**Note: Refer to 4.4.2 Connecting inputs/outputs.**

***For installation of E*PT series, set its pump speed with a pressure drop between the cylinder unit and the outdoor unit factored into the external static pressure.**

| Outdoor heat pump unit | | Water flow rate range [L/min] |
|---|---|---|
| Packaged model | PUZ-WM50 | 6.5 - 14.3 |
| | PUZ-WM60 | 8.6 - 17.2 |
| | PUZ-WM85 | 10.8 - 24.4 |
| | PUZ-WM112 | 14.4 - 32.1 |
| | PUZ-HWM140 | 17.9 - 36.9 |
| Split model SUZ series | SUZ-SWM40VA | 6.5 - 11.4 |
| | SUZ-SWM60VA | 7.2 - 17.2 |
| | SUZ-SWM80VA | 7.8 - 21.5 |
| | SUZ-SWM30VA | 6.5 - 11.4 |
| | SUZ-SWM40VA2(-SC) | 6.5 - 11.4 |
| | SUZ-SWM60VA2(-SC) | 7.2 - 17.2 |
| | SUZ-SWM80VA(H)2 | 10.9 - 21.5 |
| | SUZ-SWM100VA(H) | 10.9 - 27.2 |
| | SUZ-SHWM30VAH | 6.5 - 11.4 |
| | SUZ-SHWM40VAH(-SC) | 7.2 - 17.2 |
| | SUZ-SHWM60VAH(-SC) | 10.9 - 21.5 |
| Split model PUD series | PUD-S(H)WM60 | 9.0 - 22.9 |
| | PUD-S(H)WM80 | 9.0 - 22.9 |
| | PUD-S(H)WM100 | 14.3 - 34.4 |
| | PUD-S(H)WM120 | 14.3 - 34.4 |
| | PUD-SHWM140 | 14.3 - 34.4 |
| Split model PUZ series | PUZ-S(H)WM60 | 7.2 - 22.9 |
| | PUZ-S(H)WM80 | 7.2 - 22.9 |
| | PUZ-S(H)WM100 | 7.2 - 28.7 |
| | PUZ-S(H)WM120 | 9.0 - 34.4 |
| | PUZ-S(H)WM140 | 9.0 - 34.4 |
| Split model PUHZ series | PUHZ-SW75 | 10.2 - 22.9 |
| | PUHZ-SW100 | 14.4 - 32.1 |
| | PUHZ-SW120 | 20.1 - 36.9 |
| | PUHZ-SHW80 | 10.2 - 22.9 |
| | PUHZ-SHW112 | 14.4 - 32.1 |
| | PUHZ-SHW140 | 17.9 - 36.9 |
| Split model Multi series | PUHZ-FRP71 | 11.5 - 22.9 |
| | PUMY-P112 | 17.9 - 35.8 |
| | PUMY-P125 | 17.9 - 35.8 |
| | PUMY-P140 | 17.9 - 35.8 |
| | PXZ-4F75VG | 11.5 - 21.7 |
| | PXZ-5F85VG | 11.5 - 24.6 |

<Table 4.6.3>

* If the water flow rate is less than the minimum flow rate setting of the flow sensor(default 5.0 L/min), the flow rate error will be activated.
If the water flow rate exceeds 36.9 L/min (E**T20/30 series) or 25.8 L/min (E**T17 series), the flow speed will be greater than 2.0 m/s, which could erode the pipes.

### (2) Sanitary circuit

Default setting: Speed 2

DHW circulation pump MUST be set to speed 2.

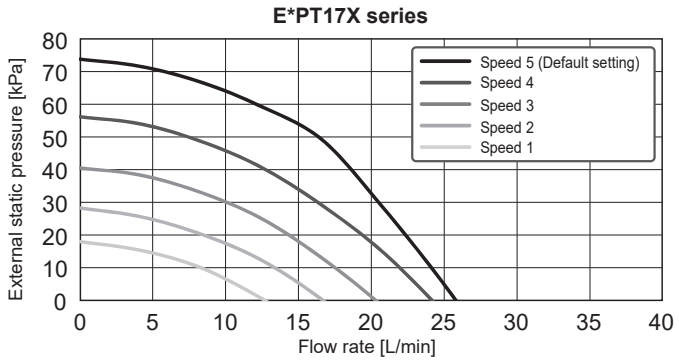
E*PT17X series
External static pressure [kPa]
Flow rate [L/min]
Speed 5 (Default setting)
Speed 4
Speed 3
Speed 2
Speed 1

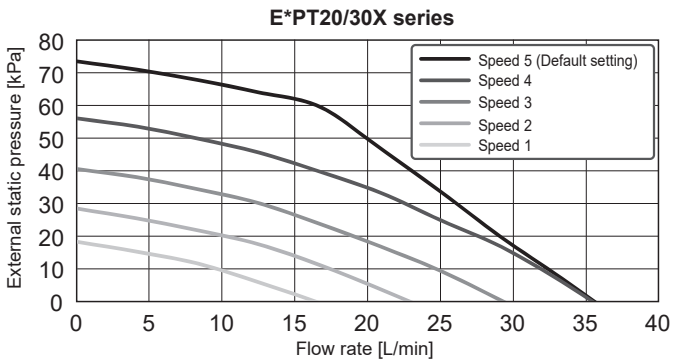
E*PT20/30X series
External static pressure [kPa]
Flow rate [L/min]
Speed 5 (Default setting)
Speed 4
Speed 3
Speed 2
Speed 1

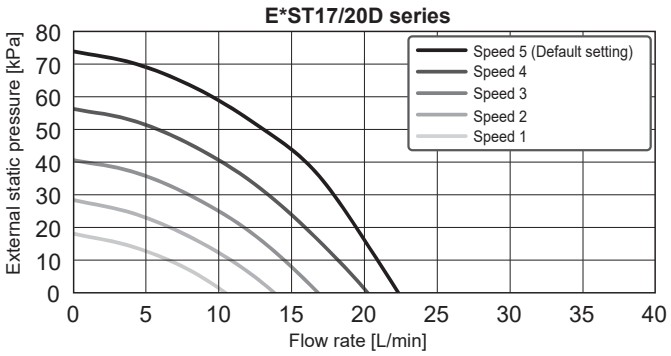
E*ST17/20D series
External static pressure [kPa]
Flow rate [L/min]
Speed 5 (Default setting)
Speed 4
Speed 3
Speed 2
Speed 1

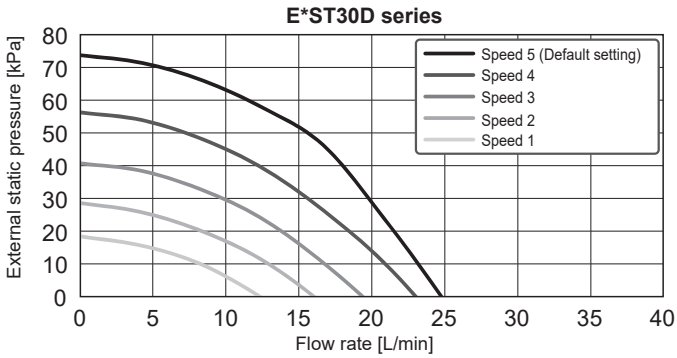
E*ST30D series
External static pressure [kPa]
Flow rate [L/min]
Speed 5 (Default setting)
Speed 4
Speed 3
Speed 2
Speed 1

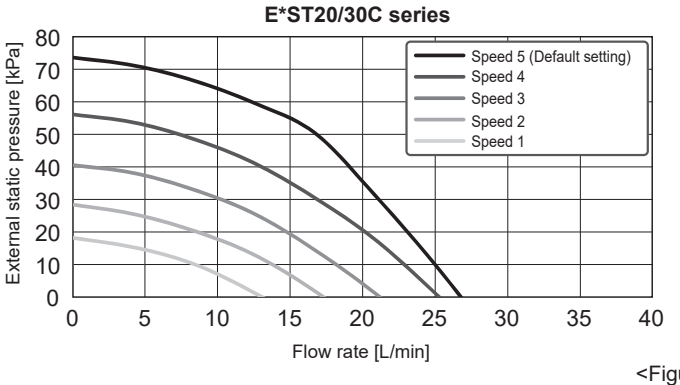
E*ST20/30C series
External static pressure [kPa]
Flow rate [L/min]
Speed 5 (Default setting)
Speed 4
Speed 3
Speed 2
Speed 1

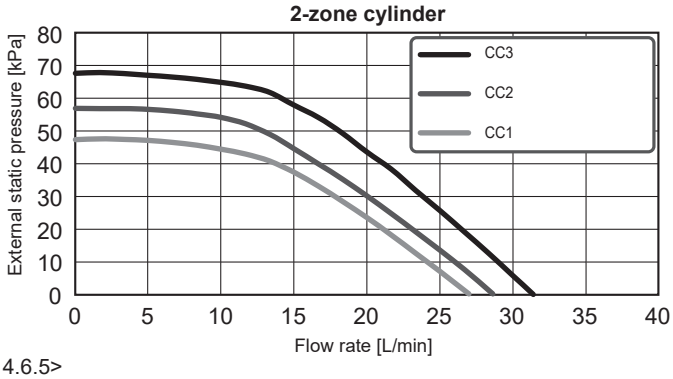
2-zone cylinder
External static pressure [kPa]
Flow rate [L/min]
CC3
CC2
CC1

<Figure 4.6.5>

## ■ Immersion heater

When an immersion heater is fitted, do NOT energise the heater until the DHW tank is full of water. Also do NOT energise any immersion heater if any sterilisation chemicals remain in the DHW tank as this will cause premature failure of the heater.

## ■ Safety Device Connections

The expansion relief valve on the secondary hot water side, and the temperature and pressure (T&P) relief valve (*A), both need appropriate discharge pipework. There must be no valve fitted between the expansion relief valve and the tank.

*A EHPT20X-MHEDW is equipped with T & P relief valve on the tank (2). Any other models are equipped with Pressure relief valve, fitted to the DHW pipework (3).

**Note : 1. Do not secure the screws excessively when connecting the Discharge pipe, otherwise it may result in damage to the cylinder unit.**

**<For UK>**

The right side panel has a plate (*B) so that connection can be made to the factory fitted temperature and pressure relief valve. If you wish to make the connection in a different position you will have to cut a hole in the side panel yourself. However it remains necessary that the drainage parameters outlined in the appropriate Building Regulations are complied with.

*B Unscrew the plate on the right-side panel, connect the Pressure relief valve to the discharge pipework, and refit the plate. Always replace the plate so that no gaps exist between the plate and side panel and the plate and drain pipe to avoid heat loss.
In accordance with Building Regulations a tundish must be fitted into the pipework within 500 mm of the safety device (also see Figure 4.6.7). Due to the distance between the two safety devices it may be necessary to fit each safety device with its own tundish before you run the pipework together to a safe discharge (see Figure 4.6.6).

**Note : 2. Alternatively the discharges from the expansion relief valve and T&P relief valve may commonly discharge to a singular tundish, so long as this tundish is located within 500 mm of the T&P relief valve in UK. When connecting discharge pipes to the safety devices, beware not to strain the inlet connections.**

| Diagram part No. | Description | Connection size | Connection type |
|---|---|---|---|
| 1 | Expansion relief valve (part of inlet control group) | 15 mm | Compression |
| 2 | T&P relief valve | 15 mm /G 1/2 | Compression/ Female |
| 3 | Pressure relief valve | G 1/2 | Female |

<Table 4.6.4>

Always refer to local regulations when installing discharge pipework.
Install discharge pipework in a frost-free environment.
It is necessary to provide appropriate drainage from the pressure relief valve situated on top of the cylinder unit to prevent damage to the unit and the surrounding area from any steam or hot water released. Relief valves MUST NOT be used for any other purpose.

For UK use WK02UK-E kit, for other countries please see below;

- Any discharge pipework should be capable of withstanding discharge of hot water. Discharge pipework should be installed in a continuously downward direction. Discharge pipework must be left open to the environment.

**<UK model>**
**EHPT20X-MHEDW**

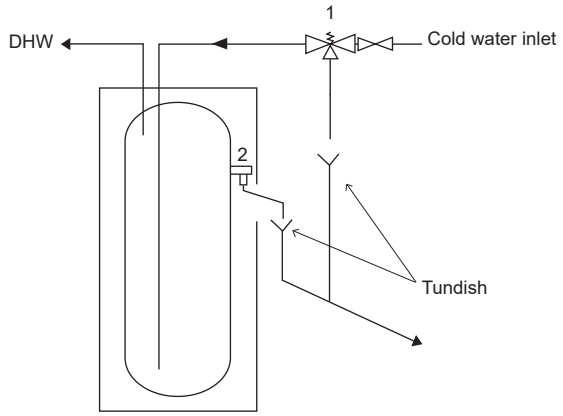


**<Other models>** The expansion vessel on the sanitary water side shall be installed as necessary in accordance with your local regulations.

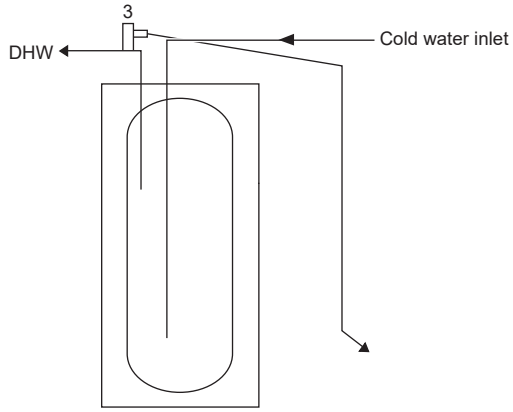


<Figure 4.6.6>

## ■ Piping diagram for 2-zone temperature control

Connect the pipe work and locally supplied parts according to the relevant circuit diagram shown in Section 3. Technical Information, of this manual.
For more details on wiring, refer to “4.4.3 Wiring for 2-zone temperature controls”.

**Note: Do not install the thermistors on the mixing tank. This could affect correct monitoring of flow and return temperatures through each zone. Install the Zone2 flow temp. thermistor (THW8) near the mixing valve.**

## 4.6.5 Safety Device Discharge Arrangements (G3)

**The following instructions are a requirement of UK Building Regulations and must be adhered to. For other countries please refer to local legislation. If you are in any doubt please seek advice from local building planning office.**

1. Position the inlet control group so that discharge from both safety valves can be joined together via a 15 mm end feed Tee.
2. Connect the tundish and route the discharge pipe as shown in Figure 4.6.7.
3. The tundish should be fitted vertically and as close to the safety device as possible and within 500 mm of the device.
4. The tundish should be visible to occupants and positioned away from electrical devices.
5. The discharge pipe (D2) from the tundish should terminate in a safe place where there is no risk to persons in the vicinity of the discharge, be of metal construction and:

A) Be at least one pipe size larger than the nominal outlet size of the safety device unless its total equivalent hydraulic resistance exceeds that of a straight pipe 9 m long i.e. discharge pipes between 9 m and 18 m equivalent resistance length should be at least two sizes larger than the nominal outlet size of the safety device, between 18 and 27 m at least 3 sizes larger, and so on. Bends must be taken into account in calculating the flow resistance. Refer to Figure 4.6.7, Table 4.6.5 and the worked example. An alternative approach for sizing discharge pipes would be to follow BS 6700: 1987 specification for design installation, testing and maintenance of services supplying water for domestic use within buildings and their cartilages.

B) Have a vertical section of pipe at least 300 mm long, below the tundish before any elbows or bends in the pipework.

C) Be installed with a continuous fall.

D) Have discharges visible at both the tundish and the final point of discharge but where this is not possible or is practically difficult there should be clear visibility at one or other of these locations. Examples of acceptable discharge arrangements are:

***i***. Ideally below a fixed grating and above the water seal in a trapped gully.

***ii***. Downward discharges at low level; i.e. up to 100 mm above external surfaces such as car parks, hard standings, grassed areas etc. are acceptable providing that where children may play or otherwise come into contact with discharges a wire cage or similar guard is positioned to prevent contact, whilst maintaining visibility.

***iii***. Discharges at high level; e.g. into a metal hopper and metal down pipe with the end of the discharge pipe clearly visible (tundish visible or not) or onto a roof capable of withstanding high temperature discharges of water and 3 m from any plastic guttering system that would collect such discharges (tundish visible).

***iv***. Where a single pipe serves a number of discharges, such as in blocks of flats, the number served should be limited to not more than 6 systems so that any installation discharging can be traced reasonably easily. The single common discharge pipe should be at least one pipe size larger than the largest individual discharge pipe (D2) to be connected. If unvented hot water storage systems are installed where discharges from safety devices may not be apparent i.e. in dwellings occupied by blind, infirm or disabled people, consideration should be given to the installation of an electronically operated device to warn when discharge takes place.

**Note: The discharge will consist of scalding water and steam. Asphalt, roofing felt and nonmetallic rainwater goods may be damaged by such discharges.**

**Worked example:** The example below is for a G½ temperature relief valve with a discharge pipe (D2) having 4 No. elbows and length of 7 m from the tundish to the point of discharge.

From Table 4.6.5: Maximum resistance allowed for a straight length of 22 mm copper discharge pipe (D2) from a G½ temperature relief valve is: 9.0 m subtract the resistance for 4 No. 22 mm elbows at 0.8 m each = 3.2 m. Therefore the maximum permitted length equates to: 5.8 m. 5.8 m is less than the actual length of 7 m, therefore calculate the next largest size. Maximum resistance allowed for a straight length of 28 mm pipe (D2) from a G½ temperature relief valve equates to: 18 m
Subtract the resistance for 4 No. 28 mm elbows at 1.0 m each = 4 m. Therefore the maximum permitted length equates to: 14 m. As the actual length is 7 m, a 28 mm (D2) copper pipe will be satisfactory.

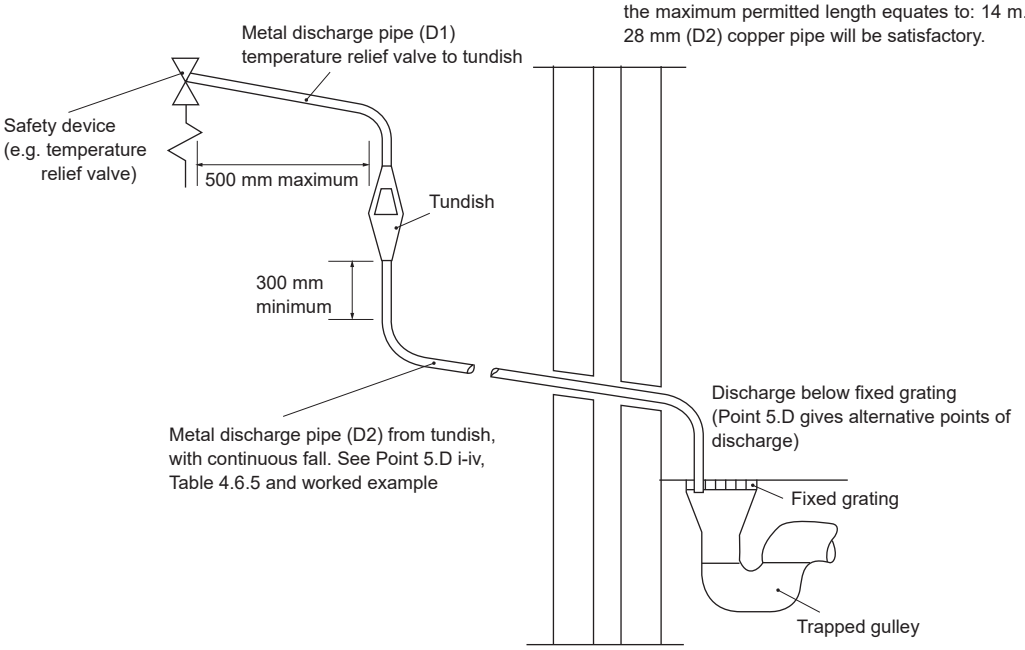


<Figure 4.6.7>

| Valve outlet size | Minimum size of discharge pipe D1 | Minimum size of discharge pipe D2 from tundish | Maximum resistance allowed, expressed as a length of straight pipe (no elbows or bends) | Resistance created by each elbow or bend |
|---|---|---|---|---|
| G 1/2 | 15 mm | 22 mm | Up to 9 m | 0.8 m |
| | | 28 mm | Up to 18 m | 1.0 m |
| | | 35 mm | Up to 27 m | 1.4 m |
| G 3/4 | 22 mm | 28 mm | Up to 9 m | 1.0 m |
| | | 35 mm | Up to 18 m | 1.4 m |
| | | 42 mm | Up to 27 m | 1.7 m |
| G1 | 28 mm | 35 mm | Up to 9 m | 1.4 m |
| | | 42 mm | Up to 18 m | 1.7 m |
| | | 54 mm | Up to 27 m | 2.3 m |

<Table 4.6.5>

## 4.7. System Set Up

### 4.7.1 Remote Controller Options

The indoor unit comes factory fitted with a main remote controller. This incorporates a thermistor for temperature monitoring and a graphical user interface to enable set-up, view current status and input scheduling functions. The main remote controller is also used for servicing purposes. This facility is accessed via password protected service menus.

To provide the best efficiency Mitsubishi Electric recommends using automatic adaptation function based on room temperature. To use this function a room thermistor needs to be present in a main living area. This can be done in a number of ways the most convenient are detailed below.
**Refer to heating section of this manual for instructions on how to set compensation curve, Flow temp. or Room temp. (Auto adaptation).**
**For instructions on how to set the thermistor input for the FTC please refer to Initial settings section.**

The factory setting for space heating mode is set to Room temp. (auto adaptation). If there is no room sensor present in the system, this setting must be changed to either Compensation curve mode or Flow temp. mode.

**Note: Auto-adaptation is not available in Cooling mode.**

Factory supplied standard

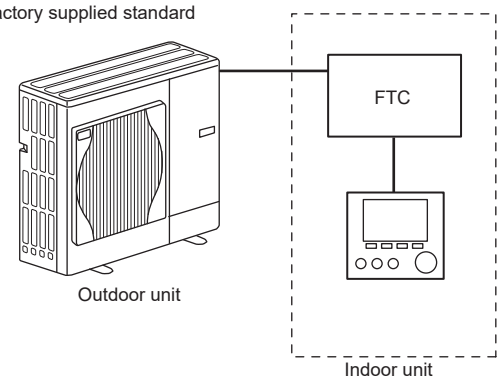


### ■ 1-zone temperature control

**Control option A**

This option features the main remote controller and the Mitsubishi Electric wireless remote controller. The wireless remote controller is used to monitor room temperature and can be used to make changes to the space heating settings, boost DHW (*1) and switch to holiday mode without having to directly use the main remote controller.

If more than one wireless remote controller is used, the most recently requested temperature setting will commonly be applied to all rooms by the central control system regardless of which wireless remote controller was used. No hierarchy exists across these remote controllers.

Wire the wireless receiver to FTC referring to the wireless remote controller instruction manual. **Turn DIP SW1-8 to ON.** Before operation configure the wireless remote controller to transmit and receive data referring to the wireless remote controller installation manual.

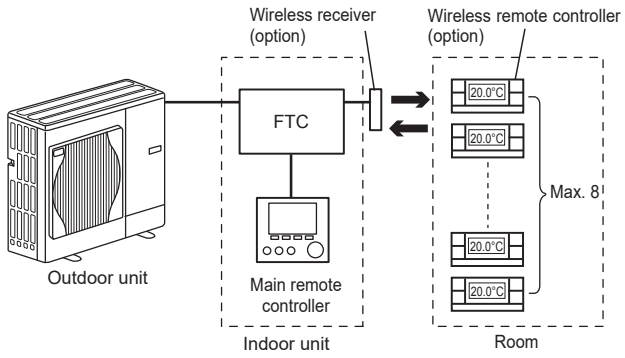


**Control option B**

This option features the main remote controller and the Mitsubishi Electric thermistor wired to FTC. The thermistor is used to monitor room temperature but can not make any changes in control operation. Any changes to DHW (*1) must be made using the main remote controller mounted on the indoor unit.

Wire the thermistor to the TH1 connector on FTC.
The number of room temperature thermistors that can be connected to FTC is always one.

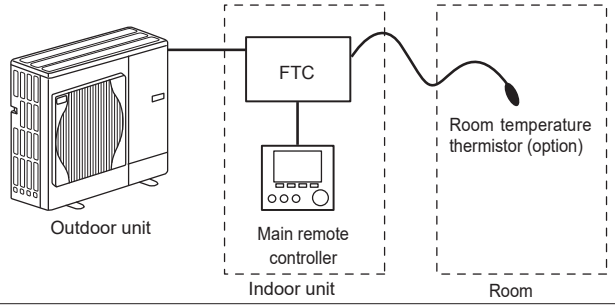


**Control option C**

This option features the main remote controller being removed from the indoor unit and situated in a different room. A thermistor built in the main remote controller can be used for monitoring the room temperature for Auto Adaptation function whilst keeping all its features of the main remote controller available.

The main remote controller and FTC are connected by a 2-core, 0.3 mm², non-polar cable (local supply) with a maximum length of 500 m.

To use the sensor in the main remote controller the main remote controller should come off from the indoor unit. Otherwise it will detect the temperature of the indoor unit instead of room temperature. This will affect the output of the space heating.

Note: Wiring for main remote controller cable shall be (5 cm or more) apart from power source wiring so that it is not influenced by electrical noise from power source wiring. (Do NOT insert main remote controller cable and power source wiring in the same conduit.)

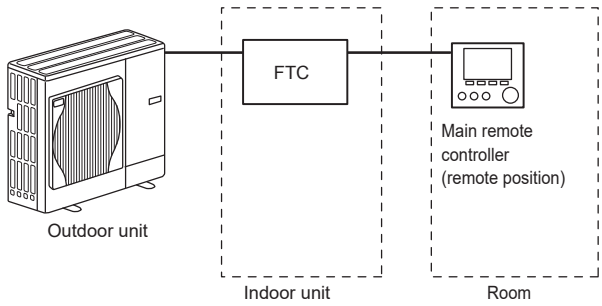


**Control option D (Flow temp. or compensation curve only)**

This option features the main remote controller and a locally supplied thermostat wired to FTC. The thermostat is used to set the maximum temperature for heating room. Any changes to DHW (*1) must be made using main remote controller mounted on the indoor unit.

The thermostat is wired to IN1 in TBI.1 on FTC. The number of thermostats that can be connected to FTC is always one.

★ **The wireless remote controller can be also used as a thermostat.**

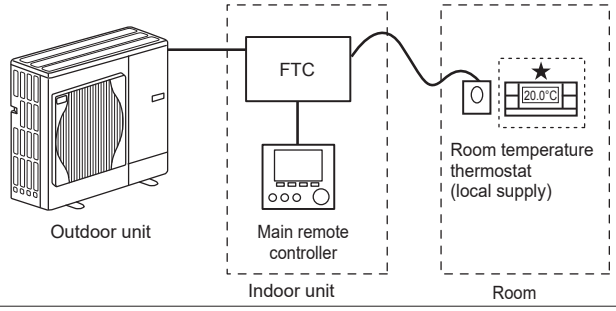


*1 If applicable

## ■ 2-zone temperature control

**Control option A**

This option features the main remote controller, the Mitsubishi Electric wireless remote controller and a locally supplied thermostat.
The wireless remote controller is used to monitor the Zone1 room temperature and the thermostat is used to monitor the Zone2 room temperature.
The thermostat can be also allocated to Zone1 and the wireless remote controller to Zone2.

The wireless remote controller can be also used to make changes to the space heating settings, boost DHW (*1) and switch to holiday mode without having to use the main remote controller.

If more than one wireless remote controller is used, the last temperature setting adjustment/demand will be applied to ALL rooms in same zone.

Wire the wireless receiver to FTC referring to the wireless remote controller instruction manual. Turn DIP SW1-8 to ON. Before operation configure the wireless remote controller to transmit and receive data referring to the wireless remote controller installation manual.
The thermostat is used to set the maximum temperature for heating Zone2 room.
The thermostat is wired to IN6 on FTC. (If the thermostat is allocated to Zone1, it is wired to IN1 on TBI.1.) (Refer to 4.4.2.)

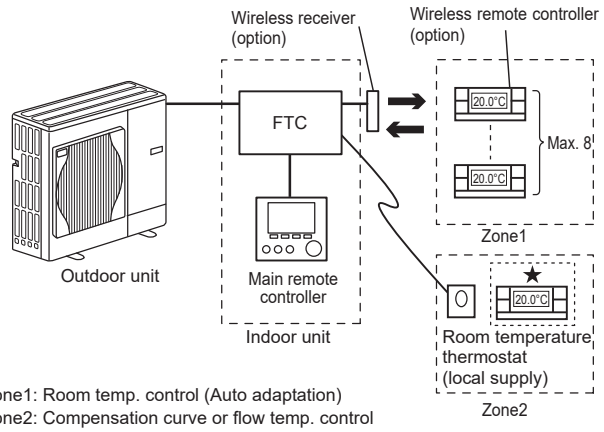


Zone1: Room temp. control (Auto adaptation)
Zone2: Compensation curve or flow temp. control

**Control option B**

This option features the main remote controller, the Mitsubishi Electric thermistor and a locally supplied thermostat that are wired to FTC.
The thermistor is used to monitor the Zone1 room temperature and the thermostat is used to control the Zone2 room temperature.

The thermostat can be also allocated to Zone1 and the thermistor to Zone2.
The thermistor can not make any changes in control operation. Any changes to DHW (*1) must be made using the main remote controller mounted on the indoor unit.
Wire the thermistor to the TH1 connector on FTC.
The number of room temperature thermistors that can be connected to FTC is always one.
The thermostat is used to set the maximum temperature for heating Zone2 room.
The thermostat is wired to IN6 on FTC. (If the thermostat is allocated to Zone1, wire it to IN1 on TBI.1.) (Refer to 4.4.2.)

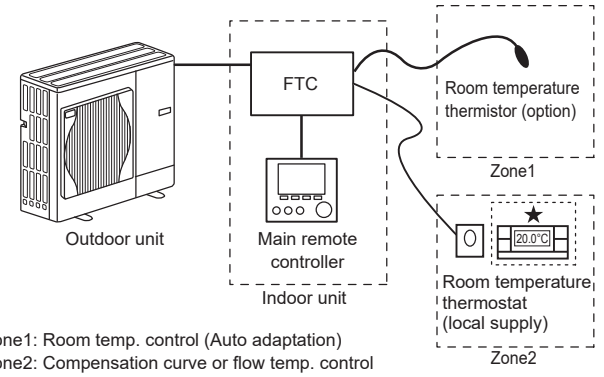


Zone1: Room temp. control (Auto adaptation)
Zone2: Compensation curve or flow temp. control

**Control option C**

This option features the main remote controller (with in-built thermistor) that is removed from the indoor unit to monitor the Zone1 room temperature and a locally supplied thermostat to monitor the Zone2 room temperature.
The thermostat can be also allocated to Zone1 and the thermistor to Zone2.

A thermistor built into the main remote controller can be used for monitoring the room temperature for Auto Adaptation function whilst keeping all its features of the main remote controller available.
The main remote controller and FTC are connected by a 2-core, 0.3 mm², non-polar cable (local supply) with a maximum length of 500 m.
To use the sensor in the main remote controller the main remote controller should be detached from the indoor unit. Otherwise it will detect the temperature of the indoor unit instead of room temperature. This will affect the output of the space heating.

The thermostat is used to set the maximum temperature for heating Zone2 room.
The thermostat is wired to IN6 on FTC. (If the thermostat is allocated to Zone1, wire it to IN1 on TBI.1.) (Refer to 4.4.2.)

Note: Wiring for main remote controller cable shall be (5 cm or more) apart from power source wiring so that it is not influenced by electrical noise from power source wiring. (Do NOT insert main remote controller cable and power source wiring in the same conduit.)

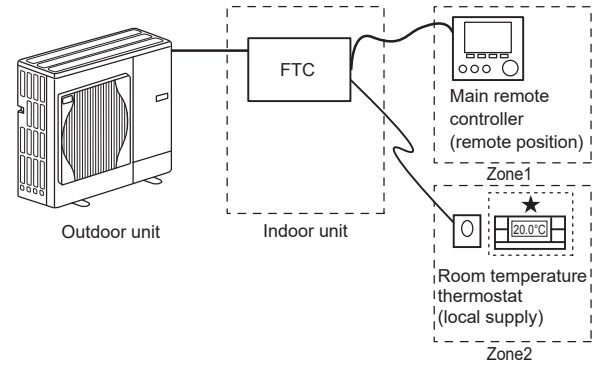


Zone1: Room temp. control (Auto adaptation)
Zone2: Compensation curve or flow temp. control

**Control option D**

This option features the locally supplied thermostats wired to FTC. The thermostats are individually allocated to Zone1 and Zone2. The thermostats are used to set each maximum temperature for heating Zone1 and Zone2 rooms. Any changes to DHW (*1) must be made using the main remote controller mounted on the indoor unit.

The thermostat for Zone1 is wired to IN1 in TBI.1 on FTC.
The thermostat for Zone2 is wired to IN6 in TBI.1 on FTC.

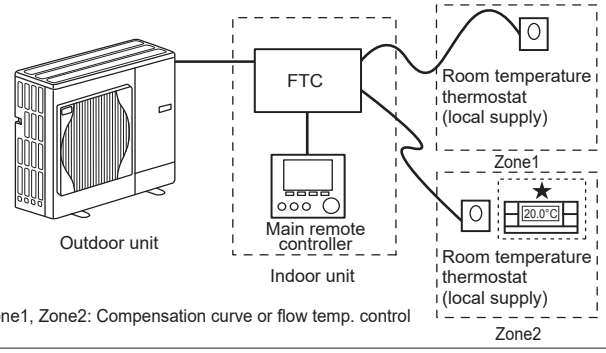


Zone1, Zone2: Compensation curve or flow temp. control

*1 If applicable
*2 For the options above, the sensor types can be exchanged between Zone1 and Zone2. (e.g. Wireless remote controller in Zone1 and Room temp. thermostat in Zone2 can be changed to Room temp. thermostat and wireless remote controller, respectively).
★ **The wireless remote controller can be also used as a thermostat.**

## 4.7.2 Main remote controller

To change the settings of your heating/cooling system please use the main remote controller located on the front panel of the cylinder unit or hydrobox. The following is a guide to viewing the main settings. Should you require more information please contact your installer or local Mitsubishi Electric dealer.
Cooling mode is available for ERS series only. However, Cooling mode is not available when the indoor unit is connected to PUHZ-FRP.

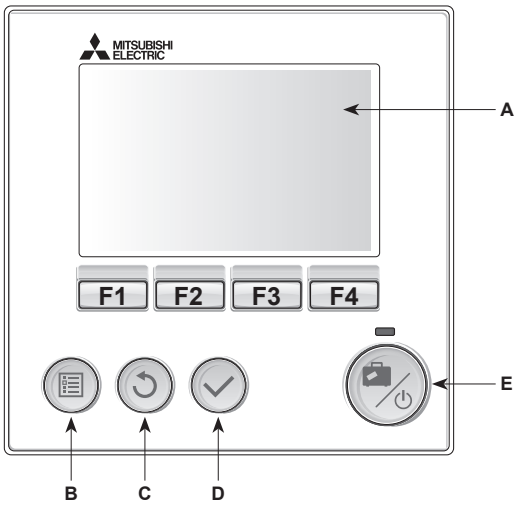


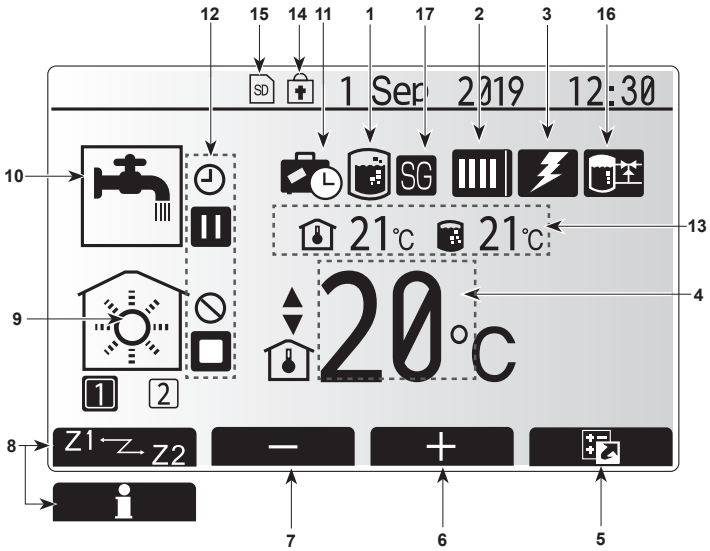


Main screen

**<Main remote controller parts>**

| Letter | Name | Function |
|---|---|---|
| A | Screen | Screen in which all information is displayed |
| B | Menu | Access to system settings for initial set up and modifications. |
| C | Back | Return to previous menu. |
| D | Confirm | Used to select or save. (Enter key) |
| E | Power/Holiday | If system is switched off pressing once will turn system ON. Pressing again when system is switched on will enable Holiday Mode. Holding the button down for 3 seconds will turn the system off. (***1**) |
| F1-4 | Function keys | Used to scroll through menu and adjust settings. Function is determined by the menu screen visible on screen A. |

***1**
**When the system is switched off or the power supply is disconnected, the indoor unit protection functions (e.g. freeze stat. function) will NOT operate. Please beware that without these safety functions enabled the indoor unit may potentially become exposed to damage.**

**<Main screen icons>**

| | Icon | Description |
|---|---|---|
| 1 | Legionella prevention | When this icon is displayed 'Legionella prevention mode' is active. |
| 2 | Heat pump | 'Heat pump' is running. |
| | | Defrosting |
| | | Emergency heating |
| | | 'Quiet mode' is activated. |
| 3 | Electric heater | When this icon is displayed the 'Electric heaters' (booster or immersion heater) are in use. |
| 4 | Target temperature | Target flow temperature |
| | | Target room temperature |
| | | Compensation curve |
| 5 | OPTION | Pressing the function button below this icon will display the option screen. |
| 6 | + | Increase desired temperature. |
| 7 | - | Decrease desired temperature. |
| 8 | Z1 Z2 | Pressing the function button below this icon switches between Zone1 and Zone2. |
| | Information | Pressing the function button below this icon displays the information screen. |
| 9 | Space heating/ cooling mode | Heating mode Zone1 or Zone2 |
| | | Cooling mode Zone1 or Zone2 |
| 10 | DHW mode | Normal or ECO mode |
| 11 | Holiday mode | When this icon is displayed 'Holiday mode' activated. |
| 12 | | Timer |
| | | Prohibited |
| | | Server control |
| | | Stand-by |
| | | Stand-by (***2**) |
| | | Stop |
| | | Operating |
| 13 | Current temperature | Current room temperature |
| | | Current water temperature of DHW tank |
| 14 | | The Menu button is locked or the switching of the operation modes between DHW and Heating operations are disabled in the Option screen.(***3**) |
| 15 | | SD memory card is inserted. Normal operation. |
| | | SD memory card is inserted. Abnormal operation. |
| 16 | Buffer tank control | When this icon is displayed 'Buffer tank control' is active. |
| 17 | Smart grid ready | When this icon is displayed, 'Smart grid ready' is active. |

***2 This unit is in Stand-by whilst other indoor unit(s) is in operation by priority.**
***3 To lock or unlock the Menu, press the BACK and CONFIRM keys simultaneously for 3 seconds.**

## ■ Initial settings wizard

When the main remote controller is switched on for the first time, the screen automatically goes to Language setting screen , Date/Time setting screen and Main settings menu screen in order. Enter the desired number using the function keys and press CONFIRM.

**Note:**
<HEATER CAPACITY RESTRICTION>
This setting restricts the booster heater capacity. It is NOT possible to change the setting after starting up.
If you do not have any special requirements (such as building regulations) in your country, skip this setting (select "No").

- Hot water (DHW/Legionella)
- Heating/Cooling
- Operation (ON/Prohibited/Timer)
- Pump speed
- Heat pump flow rate range
- Mixing valve control
- HEATER CAPACITY RESTRICTION

*1 The screen goes to the next setting screen. Changes have not been saved.

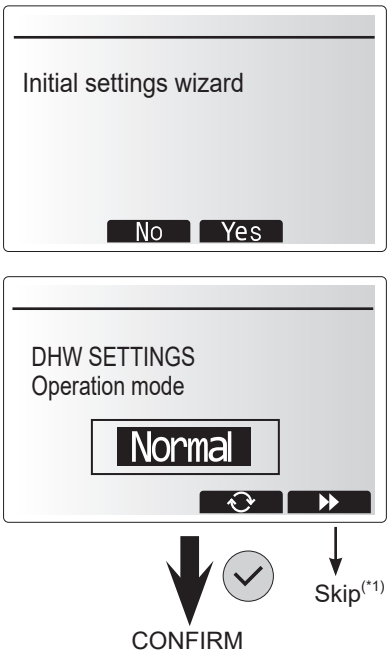


## ■ Main Settings Menu

The main settings menu can be accessed by pressing the MENU button. To reduce the risk of untrained end users altering the settings accidentally there are two access levels to the main settings; and the service section menu is password protected.

**User Level – Short press**
If the MENU button is pressed once for a short time the main settings will be displayed but without the edit function. This will enable the user to view current settings but **NOT** change the parameters.

**Installer Level – Long press**
If the MENU button is pressed down for 3 seconds the main settings will be displayed with all functionality available.
The colour of ◄ ► buttons is inverted, as per figure on right. <Fig. 4.7.1>

The following items can be viewed and/or edited (dependent on access level).
- Domestic Hot water (DHW)
- Heating/Cooling
- Schedule timer
- Holiday mode
- Initial settings
- Service (Password protected)

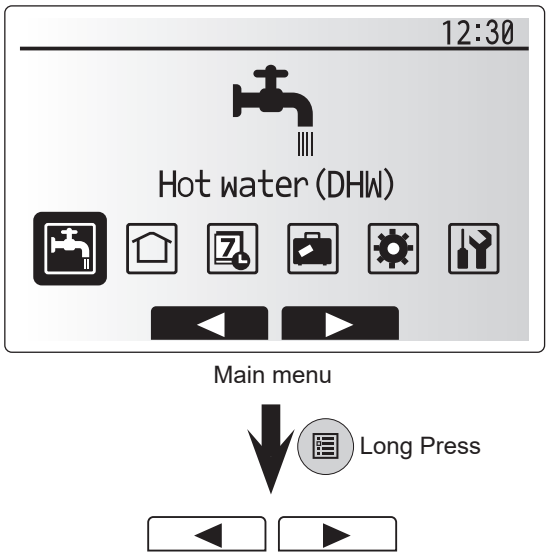


<Fig 4.7.1>

**<Main Controller Menu Tree>**

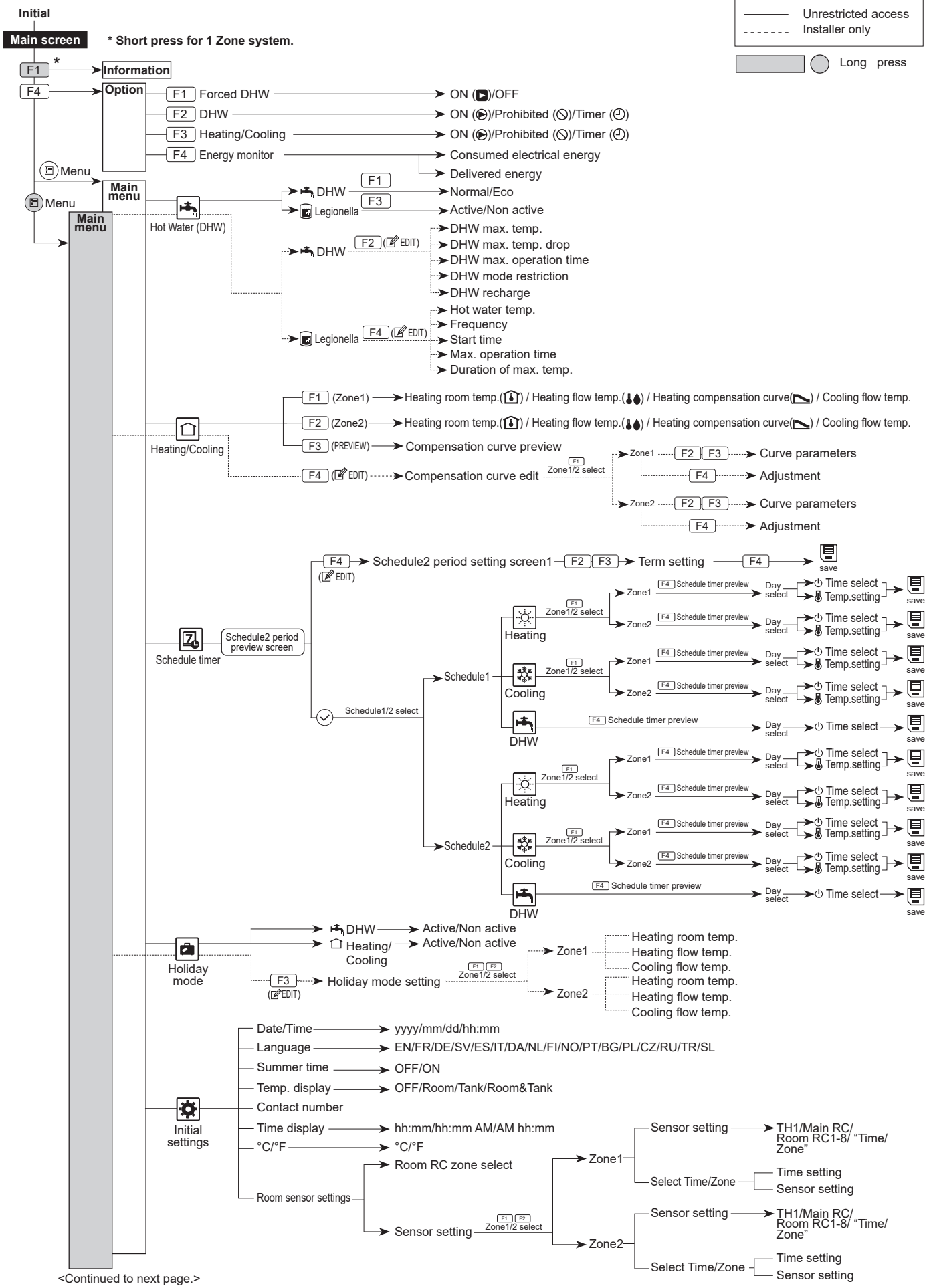


<Continued to next page.>

<Continued from the previous page.>

**<Main Controller Menu Tree>**

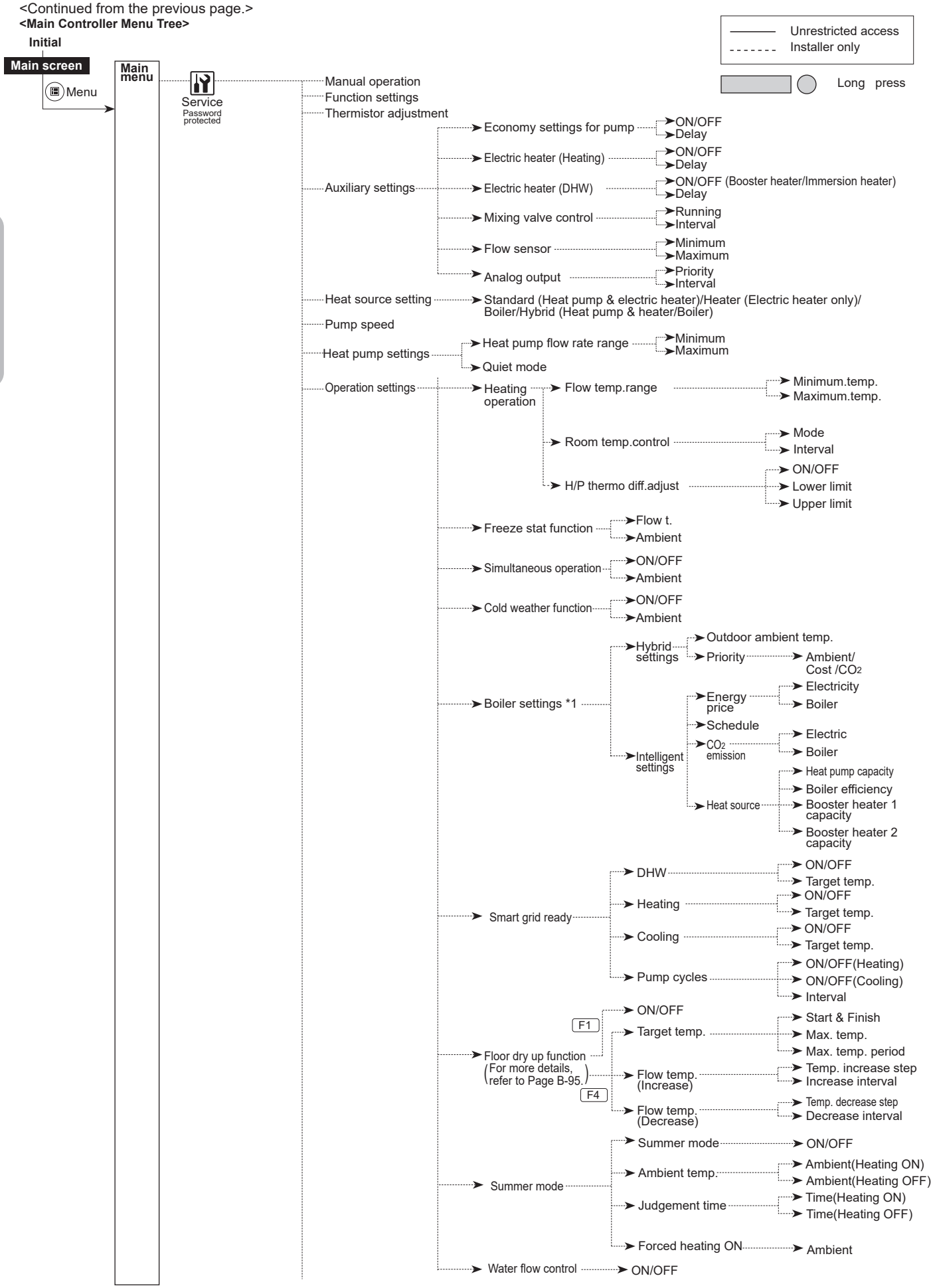


*1 For more details, refer to the installation manual of PAC-TH012HT-(L)E.

<Continued from the previous page.>

**<Main Controller Menu Tree>**

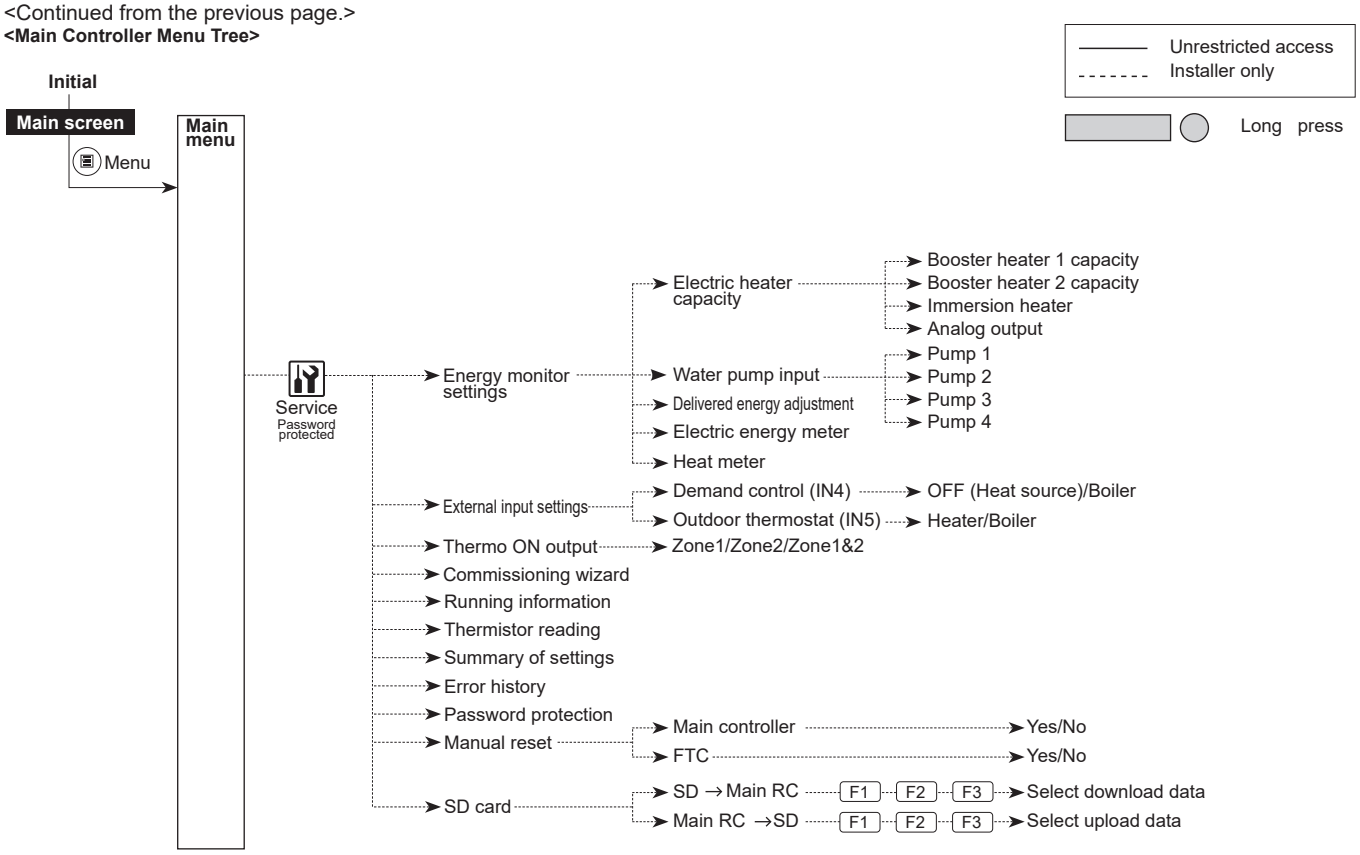


## Domestic Hot Water (DHW)/Legionella Prevention

The domestic hot water and legionella prevention menus control the operation of DHW tank heat ups.

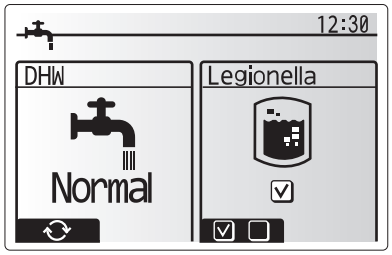


**<DHW mode settings>**

1. Highlight the hot water icon and press CONFIRM.
2. Use button F1 to switch between Normal and ECO heating modes.
3. To edit the mode, press down the MENU button for 3 seconds, then select “hot water”.
4. Press F2 key to display the Hot Water (DHW) SETTING menu.
5. Use F2 and F3 keys to scroll through the menu selecting each component in turn by pressing CONFIRM. See the table below for description of each setting.
6. Enter the desired number using the function keys and press CONFIRM.

| Menu subtitle | Function | Range | Unit | Default value |
|---|---|---|---|---|
| DHW max. temp. | Desired temperature of stored hot water | 40 - 60 | °C | 50 |
| DHW max. temp. drop | Difference in temperature between DHW max. temp. and the temperature at which DHW mode restarts | 5 - 30 * | °C | 10 |
| DHW max. operation time | Max. time allowed for stored water heating DHW mode | 30 - 120 | min | 60 |
| DHW mode restriction | The time period after DHW mode when space heating has priority over DHW mode temporarily preventing further stored water heating (Only when DHW max. operation time has passed.) | 30 - 120 | min | 30 |

* When the DHW max. temp is set over 55°C, the temperature at which DHW mode restarts must be less than 50°C to protect the device.

**<Eco mode>**

DHW mode can run in either ‘Normal’ or ‘Eco’ mode. Normal mode will heat the water in the DHW tank more quickly using the full power of the heat pump. Eco mode takes a little longer to heat the water in the DHW tank but the energy used is reduced. This is because heat pump operation is restricted using signals from the FTC based on measured DHW tank temperature.

**Note: The actual energy saved in Eco mode will vary according to outdoor ambient temperature.**

**<DHW recharge>**

Select the amount of DHW. If you need much hot water, select LARGE, but increase operating costs.

Return to the DHW/legionella prevention menu.

### Legionella Prevention Mode settings (LP mode)

1. Use button F3 to choose legionella mode active YES/NO.
2. To edit the legionella function, press down the MENU button for 3 seconds and select “hot water”, then press F4 key.
3. Use F1 and F2 keys to scroll through the menu selecting each subtitle in turn by pressing CONFIRM. See the table below for description of each setting.
4. Enter the desired number using the function keys and press CONFIRM.

During Legionella Prevention Mode the temperature of the stored water is increased above 60°C to inhibit legionella bacteria growth. It is strongly recommended that this is done at regular intervals. Please check local regulations for the recommended frequency of heat ups.

Please note that LP mode uses the assistance of electric heaters to supplement the energy input of the heat pump. Heating water for long periods of time is not efficient and will increase running costs. The installer should give careful consideration to the necessity of legionella prevention treatment whilst not wasting energy by heating the stored water for excessive time periods. The end user should understand the importance of this feature.
**ALWAYS COMPLY WITH LOCAL AND NATIONAL GUIDANCE FOR YOUR COUNTRY REGARDING LEGIONELLA PREVENTION.**

**Note: When failures occur on the indoor unit, the LP mode may not function normally.**

| Menu subtitle | Function | Range | Unit | Default value |
|---|---|---|---|---|
| Hot water temp. | Desired temp. of stored hot water | 60 – 70 | °C | 65 |
| Frequency | Time between LP mode DHW tank heat up | 1 – 30 | day | 15 |
| Start time | Time when LP mode will begin | 0:00 – 23:00 | - | 03:00 |
| Max. operation time | Maximum time allowed for LP mode DHW tank heat | 1 – 5 | hour | 3 |
| Duration of max. temp. | The time period after LP mode desired water temp. has been reached | 1 – 120 | min | 30 |

## Heating/Cooling

The heating/cooling menus deal with space heating/cooling using normally either a radiator, fan-coil, or underfloor heating/cooling system depending on the installation.

There are 3 heating modes

- Heating room temp. (Auto adaptation) ( )
- Heating flow temp. ( )
- Heating compensation curve ( )
- Cooling flow temp. ( )

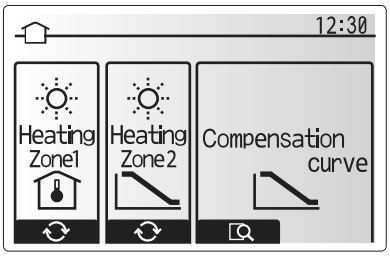


### <Room temp. (Auto adaptation) mode>

In room temp. (Auto adaptation) mode the controller uses temperature sensors around the heating system to monitor space and flow temperatures. This data is regularly updated and compared to previous data by the controller to predict changes in room temperature and adjust the temperature of water flowing to the space heating circuit accordingly.
By monitoring not only the outdoor ambient, but the room and heating circuit water temperatures, the heating is more consistent and sudden spikes in required heat output are reduced. This results in a lower overall flow temperature being required.

### <Flow temp. mode>

The temperature of the water flowing to the heating circuit is set by the installer to best suit the space heating/cooling system design, and user’s desired requirements.

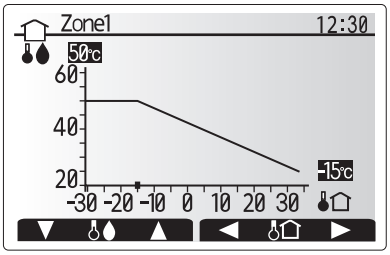


: Flow temp.
: Outdoor ambient temp.

**Explanation of compensation curve**

During late spring and summer usually the demand for space heating is reduced. To prevent the heat pump from producing excessive flow temperatures for the primary circuit the compensation curve mode can be used to maximise efficiency and reduce running costs.

The compensation curve is used to restrict the flow temperature of the primary space heating circuit dependent on the outdoor temperature. The FTC uses information from both an outdoor temperature sensor and a temperature sensor on the primary circuit supply to ensure the heat pump is not producing excessive flow temperatures if the weather conditions do not require it.

Your installer will set the parameters of the graph depending on local conditions and type of space heating used in your home. It should not be necessary for you to alter these settings. If however you find that over a reasonable operating period the space heating is not heating or is overheating your home, please contact your installer so they can check your system for any problems and update these settings if necessary.

## Schedule timer

Scheduled timer can be set in two ways, for example; one for summer and the other for winter. (Refer to as “Schedule 1” and “Schedule 2” respectively.) Once the term (months) for the Schedule 2 is specified, rest of the term will be specified as Schedule 1. In each Schedule, an operational pattern of modes (Heating/Cooling/DHW) can be set. If no operational pattern is set for Schedule 2, only the pattern for Schedule 1 will be valid. If Schedule 2 is set to full-year (i.e. March to Feb.), only the operational pattern for Schedule 2 will be valid.

**The schedule timer is activated or deactivated in the option screen. (See ‘General Operation’ section)**

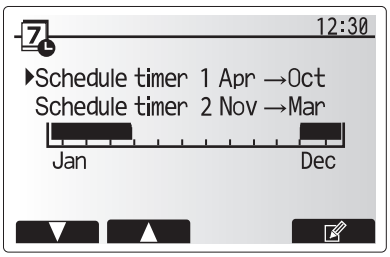

Schedule 2 period preview screen

### <Setting the Schedule period>

1. From the main settings menu use F2 and F3 to highlight the schedule icon then press CONFIRM.
2. The Schedule period preview screen is displayed.
3. To change the Schedule period, press F4. button.
4. The time bar edit screen is displayed.
5. Use F2/F3 button to point at a starting month of the Schedule 2, then press CONFIRM.
6. Use F2/F3 button to point at an ending month of the Schedule 2, then press CONFIRM.
7. Press F4 to save settings.

### <Setting the Schedule timer>

1. From the main settings menu use F2 and F3 to highlight the schedule icon then press CONFIRM.
2. From the Schedule 2 period preview screen use F1 and F2 to scroll through the selecting each subtitle in turn by pressing CONFIRM.
3. The schedule timer sub menu will be displayed. The icons show the following modes;
   - Heating
   - Cooling
   - DHW
4. Use F2 and F3 buttons to move between mode icons press CONFIRM to be shown the PREVIEW screen for each mode.

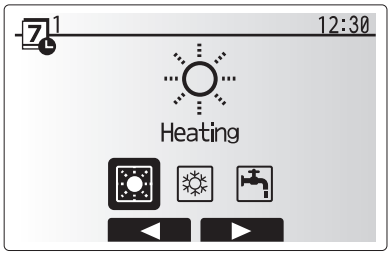

Schedule 1 mode select screen

The preview screen allows you to view the current settings. In 2-zone heating/cooling operation, press F1 to switch between Zone1 and Zone2. Days of the week are displayed across the top of the screen. Where day appears underlined the settings are the same for all those days underlined.
Hours of the day and night are represented as a bar across the main part of the screen. Where the bar is solid black, space heating/cooling and DHW (whichever is selected) is allowed.

5. In the preview menu screen press F4 button.

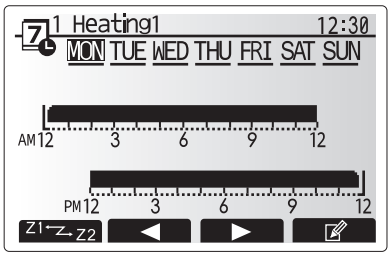

Preview screen

6. First select the days of the week you wish to schedule.
7. Press F2/F3 buttons to move between days and F1 to check or uncheck the box.
8. When you have selected the days press CONFIRM.

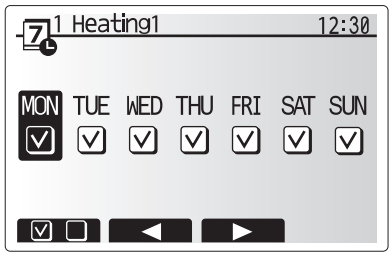

Day of week select screen

9. The time bar edit screen will be displayed.
10. Use buttons F2/F3 to move to the point at which you do not want the selected mode to be active press CONFIRM to start.
11. Use F3 button to set the required time of inactivity then press CONFIRM.
12. You can add up to 4 periods of inactivity within a 24 hour interval.

13. Press F4 to save settings.

When scheduling heating, button F1 changes the scheduled variable between time and temperature. This enables a lower temperature to be set for a number of hours e.g. a lower temperature may be required at night when the occupants are sleeping.

**Notes:**
- **The schedule timer for space heating/cooling and DHW are set in the same way. However for DHW only time can be used as scheduling variable.**
- **A small rubbish bin character is also displayed choosing this icon will delete the last unsaved action.**
- **It is necessary to use the SAVE function F4 button to save settings. CONFIRM does NOT act as SAVE for this menu.**

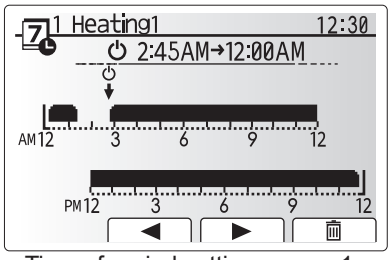

Time of period setting screen 1

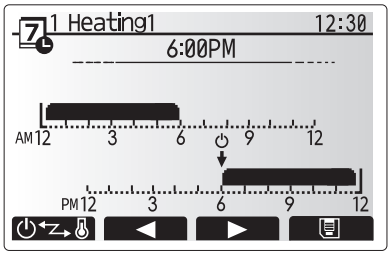

Time of period setting screen 2

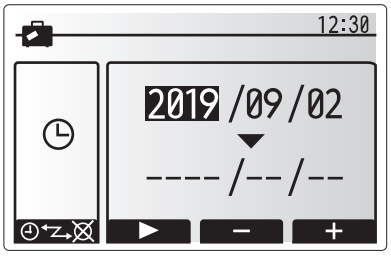


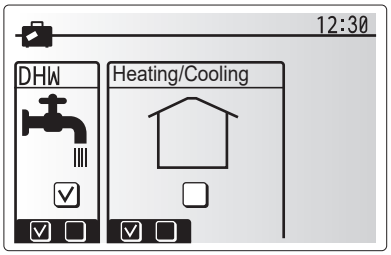


## Holiday mode

Holiday mode can be used to keep the system running at lower flow temperatures and thus reduced power usage whilst the property is unoccupied. Holiday mode can run either flow temp., room temp., heating, compensation curve heating and DHW all at reduced flow temperatures to save energy if the occupier is absent.

From the main menu screen press button E should be pressed. Be careful not to hold down button E for too long as this will turn off the controller and system.

Once the holiday mode activation screen is displayed you can activate/deactivate and select the duration that you would like holiday mode to run for.
- Press button F1 to activate or deactivate holiday mode.
- Use buttons F2, F3 and F4 to input the date which you would like holiday mode to activate or deactivate holiday mode for space heating.

**<Editing holiday mode>**
Refer to the menu tree in “Main remote controller” of Installation Manual.
Should you require the Holiday mode settings e.g. the flow temp., room temp. to be altered you should contact your installer.

## Initial Settings

From the Initial settings menu the installer can set the following.
- Date/Time *Be sure to set it to the local standard time.
- Language
- Summer time
- Temp. display
- Contact number
- Time display
- ºC/ºF
- Room sensor settings

Follow the procedure described in General Operation for the set up operation.

**<Room sensor settings>**
For room sensor settings it is important to choose the correct room sensor depending on the heating mode the system will operate in.

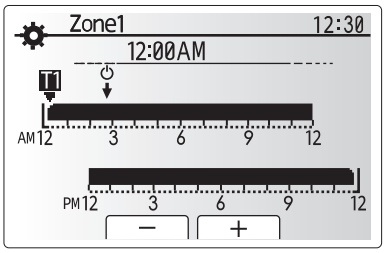

Time/Zone schedule setting screen

| Menu subtitle | Description |
|---|---|
| Room RC zone select | When 2-zone temperature control is active and wireless remote controllers are available, from Room RC zone select screen, select zone no. to assign to each main remote controller. |
| Sensor setting | From sensor setting screen, select a room sensor to be used for monitoring the room temperature from Zone1 and Zone2 separately. |

| Control option (Section 4.7.1) | Corresponding initial settings room sensor | |
|---|---|---|
| | Zone1 | Zone2 |
| A | Room RC 1-8 (one each for Zone1 and Zone2) | *1 |
| B | TH1 | *1 |
| C | Main remote controller | *1 |
| D | *1 | *1 |
| When different room sensors are used according to the time schedule | Time/ Zone*2 | *1 |

*1. Not specified (if a locally-supplied room thermostat is used) Room RC 1-8 (one each for Zone1 and Zone2) (if a wireless remote controller is used as a room thermostat)
*2. From sensor setting screen, select Time/Zone to make it possible to use different room sensors according to the time schedule set in the Select Time/ Zone menu. The room sensors can be switched up to 4 times within 24 hours.

## Service Menu

The service menu provides functions for use by installer or service engineer. It is NOT intended the home owner alters settings within this menu. It is for this reason password protection is required to prevent unauthorised access to the service settings.
The factory default password is "0000".
Follow the procedure described in General Operation for the set up operation.

Many functions can not be set whilst the indoor unit is running. The installer should turn off the unit before trying to set these functions. If the installer attempts to change the settings whilst the unit is running the main remote controller will display a reminder message prompting the installer to stop operation before continuing. By selecting “Yes” the unit will cease operation.

### <Manual operation>

During the filling of the system the primary circuit circulation pump and 3-way valve can be manually overridden using manual operation mode.
When manual operation is selected a small timer icon appears in the screen. When selected, this function will only remain in manual operation for a maximum of 2 hours. This is to prevent accidental permanent override of the FTC.

►Example
Pressing F3 button will switch manual operation mode ON for the main 3-way valve. When filling of the DHW tank is complete the installer should access this menu again and press F3 to deactivate manual operation of the part. Alternatively after 2 hours manual operation mode will no longer be active and FTC can resume control of the indoor unit.

Manual operation and heat source setting can not be selected if the system is running. A screen will be displayed asking the installer to stop the system before these modes can be activated.
The system automatically stops 2 hours after last operation.

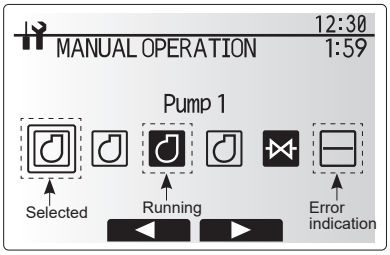

Manual operation menu screen

### <Function settings>

Function Setting allows the setting of auto recovery after power failure.
1. From the service menu use F1 and F2 to highlight Function Setting.
2. Press CONFIRM.
3. Ensure the Ref address and unit number are displayed to the right.
4. Press CONFIRM.
5. Use F3 and F4 to highlight either 1/2/3 (see below).
6. Press CONFIRM.

| Setting | Unit | Mode | Number |
|---|---|---|---|
| Auto recovery after power failure | Grp | Mode1 | 1 - Inactive<br>2 - Active *1<br>3 - NO FUNCTION |

*1 Approx. 4-minute delay after power is restored.

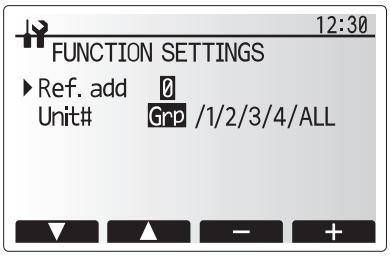


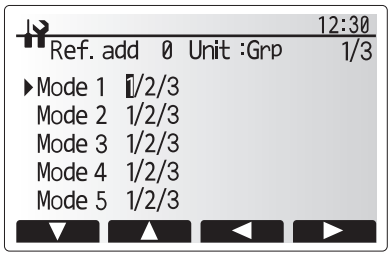


### <Thermistor adjustment>

This function allows adjustments to be made to the thermistor readings from −10 to 10°C in 0.5°C intervals.

THW1: Thermistor (Flow water temp.)
THW2: Thermistor (Return water temp.)
THW5: Thermistor (DHW tank water temp.)
THW6: Thermistor (Zone1 flow temp.)(Option)
THW7: Thermistor (Zone1 return temp.)(Option)
THW8: Thermistor (Zone2 flow temp.)(Option)
THW9: Thermistor (Zone2 return temp.)(Option)
THW10: Thermistor (Boiler flow temp.)(Option)
THWB1: Thermistor (Boiler return temp.)(Option)

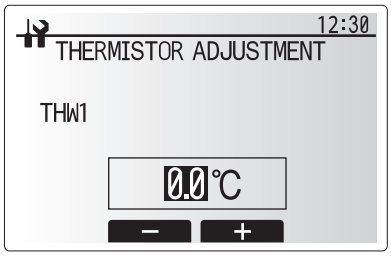

**<Auxiliary settings>**

This function is used to set the parameters for any auxiliary parts used in the system

| Menu subtitle | | Function/ Description |
|---|---|---|
| Economy settings for pump | | Water pump stops automatically in certain period of time from when operation is finished. |
| | Delay | Time before pump switched off *1 |
| Electric heater (Heating) | | To select “WITH booster heater (ON)” or “WITHOUT booster heater (OFF)” in Heating mode. |
| | Delay | The minimum time required for the booster heater to turn ON from after Heating mode has started. |
| Electric heater (DHW) | | To select "WITH (ON)" or "WITHOUT (OFF)" booster heater or immersion heater individually in DHW mode. |
| | Delay | The minimum time required for the booster heater or immersion heater to turn ON from after DHW mode has started. (This setting is applied for both booster and immersion heater.) |
| Mixing valve control *2 | Running | Period from valve fully open (at a hot water mixing ratio of 100%) to valve fully closed (at a cold water mixing ratio of 100%) |
| | Interval | Interval (min.) to control the Mixing valve. |
| Flow sensor *3 | Minimum | The minimum flow rate to be detected at Flow sensor. |
| | Maximum | The maximum flow rate to be detected at Flow sensor. |

*1 Decreasing "time before pump switched off" may increase the duration of stand-by in Heating/Cooling mode.

*2 Set the Running time according to the specifications of the actuator of each mixing valve. It is recommended to set the interval to 2 minutes that is a default value. With the interval set longer, it could take longer to warm up a room.

*3 Do not change the setting since it is set according to the specification of Flow sensor attached to the cylinder unit.

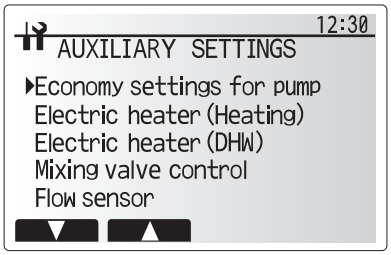


Auxiliary settings menu screen

**Economy settings for pump**

1. From the Auxiliary settings menu highlight Economy Settings for water circulation pump.
2. Press CONFIRM.
3. The economy settings for water circulation pump screen is displayed.
4. Use button F1 to switch the economy settings ON/OFF.
5. Use buttons F3 and F4 to adjust the time the water circulation pump will run. (3–60 minutes)

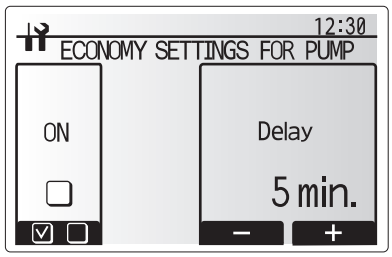


Economy settings for pump screen

**Electric heater (Heating)**

1. From the Auxiliary settings menu highlight Electric heater (Heating).
2. Press CONFIRM.
3. The Electric heater (Heating) screen is displayed.
4. Press F1 button to switch the function ON/OFF.
5. Use F3 and F4 buttons to adjust the time period of heat pump only operation before the booster heater will assist in space heating. (5–180 minutes)

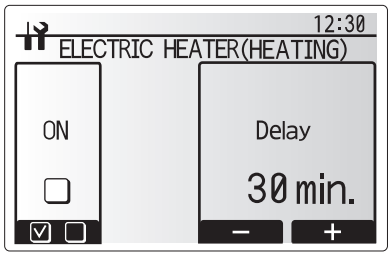


Electric heater (Heating) screen

**Electric heater (DHW)**

1. From the Auxiliary settings menu highlight Electric heater (DHW).
2. Press CONFIRM.
3. The Electric heater (DHW) screen is displayed.
4. Press F1 and F2 buttons to switch the function ON/OFF. (F1: booster heater, F2: immersion heater)
5. Use F3 and F4 buttons to adjust the time period of heat pump only operation before the booster heater and the immersion heater (if present) will assist in DHW heating. (15–30 minutes)

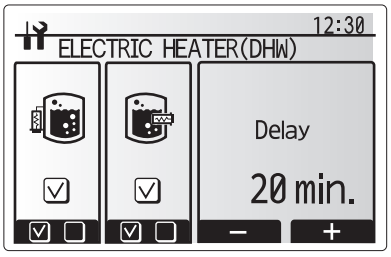


Electric heater (DHW) screen

**Mixing valve control**

1. From the Auxiliary settings menu highlight Mixing valve control.
2. Press CONFIRM.
3. The Mixing valve control screen is displayed.
4. Use F1 and F2 buttons to set Running time between 10 to 240 seconds. The Running time equals to a period from full open of the valve (at a hot water mixing ratio of 100%) to full close (at a cold water mixing ratio of 100%).

**Note: Set the Running time according to the specifications of the actuator of each mixing valve.**

1. From the Auxiliary settings menu highlight Mixing valve control.
2. Press CONFIRM.
3. The Mixing valve control screen is displayed.
4. Press F3 and F4 buttons to set the interval between 2-zone temperature controls of the mixing valve between 1 to 30 minutes.

**Note: It is recommended to set the interval to 2 minutes that is a default value. With the interval set longer, it could take longer to warm up a room.**

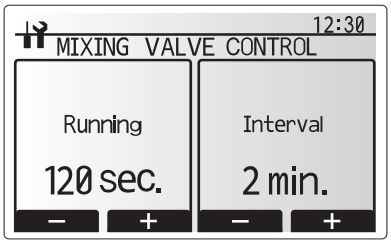

Mixing valve control setting screen

**Flow sensor**

1. From the Auxiliary settings menu highlight Flow sensor.
2. Press CONFIRM.
3. Press F3 or F4 buttons to select a refrigerant address of which you wish to configure or check the settings, and press CONFIRM. *1
4. The Flow sensor screen is displayed.
5. Use F1 and F2 buttons to set the minimum flow rate of flow sensor between 0 to maximum L/min.
6. Use F3 and F4 buttons to set the maximum flow rate of flow sensor between minimum to 100L/min.

*1 For multiple outdoor units control system only.

**Note: Do not change the setting since it is set according to the specification of Flow sensor attached to the cylinder unit.**

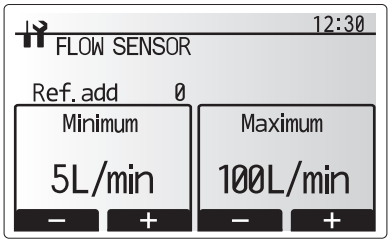

Flow sensor setting screen

**<Heat source setting>**

The default heat source setting is heat pump and all electric heaters present in the system to be operational. This is referred to as Standard operation on the menu.

Heat source setting screen

**<Pump speed>**

1. From the Service menu highlight Pump speed.
2. Press CONFIRM.
3. Press F3 and F4 buttons to select a refrigerant address of which you wish to configure or check the settings, and press CONFIRM. *1
4. The Pump speed screen is displayed.
5. Use F1 and F2 buttons to set the pump speed (1 to 5) of DHW operation.
6. Use F3 and F4 buttons to set the pump speed (1 to 5) of space heating(cooling) operation.

*1 For multiple outdoor units control system only.

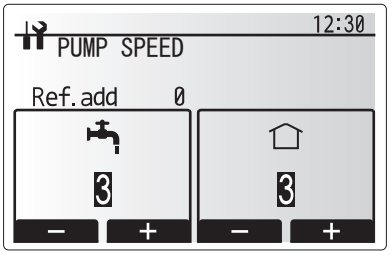

Pump speed setting screen

### <Operation settings>

**Heating operation**

This function allows operational setting of flow temperature range from the Ecodan and also the time interval at which the FTC collects and processes data for the auto adaptation mode.

| Menu subtitle | | Function | Range | Unit | Default |
|---|---|---|---|---|---|
| Flow temp. range | Minimum temp. | To minimize the loss by frequent ON and OFF in mild outdoor ambient temperature seasons. | 20 to 45 | ºC | 30 |
| | Maximum temp. | To set max. possible flow temperature according to the type of heat emitters. | 35 to 60 | ºC | 50 |
| Room temp. control | Mode | Setting for Room temp. control<br>At Fast mode, target outlet water temperature is set higher than the one set at normal mode. This reduces the time to reach the target room temperature when the room temperature is relatively low.* | Normal/ Fast | — | Normal |
| | Interval | Selectable according to the heat emitter type and the materials of floor (i.e. radiators, floor heating-thick, -thin concrete, wood, etc.) | 10 to 60 | min | 10 |
| Heat pump thermo diff.adjust | ON/OFF | To minimize the loss by frequent ON and OFF in mild outdoor ambient temperature seasons. | ON/OFF | — | ON |
| | Lower limit | Prohibits heat pump operation until the flow temperature drops below the target flow temperature plus lower limit value. | −9 to −1 | ºC | −5 |
| | Upper limit | Allows heat pump operation until the flow temperature rises above the target flow temperature plus upper limit value. | +3 to +5 | ºC | +5 |

< Heating operation (Room temp. control) >

**Notes:**

1. The minimum flow temperature that prohibits heat pump operation is 20ºC.
2. The maximum flow temperature that allows heat pump operation equals to the maximum temperature set in the Flow temp. range menu.

* Fast mode is not efficient and will increase running cost compared to normal mode.

**Freeze stat function**

| Menu subtitle | | Function/ Description |
|---|---|---|
| Freeze stat function *1 | | An operational function to prevent the water circuit from freezing when outdoor ambient temperature drops. |
| | Flow t. | The target outlet water temperature at water circuit when operating in Freeze stat function. *2 |
| | Outdoor ambient temp. | Minimum outdoor ambient temperature which freeze stat function will begin to operate,<br>(3–20ºC) or choose**. If asterisk (**) is chosen freeze stat function is deactivated. (i.e. primary water freeze risk)" |

*1. When the system is turned off, freeze stat function is not enabled.
*2. Flow t. is fixed to 20°C and unchangeable.

**Simultaneous Operation**

For periods of very low outdoor ambient temperature this mode can be used. Simultaneous operation allows both DHW and space heating to run together by using the heat pump and/or booster heater to provide space heating whilst only the immersion heater provides heating for DHW. This operation is only available if BOTH a DHW tank AND immersion heater are present on the system.

- Range of outdoor ambient temperature at which simultaneous operation starts is −30 to 10°C (default −15°C).
- System shall automatically return to routine operation. This will happen when the outdoor ambient temperature rises above the selected temperature for this specific mode of operation.

**Cold weather function**

For extremely low outdoor ambient temperature conditions when the heat pump's capacity is restricted, the heating or DHW is provided only by the electric booster heater (and immersion if present). This function is intended for use during extreme cold periods only. Extensive use of direct electrical heaters ONLY will result in higher power consumption and may reduce working life of heaters and related parts.

- Range of outdoor ambient temperature at which cold weather function starts is −30 to −10°C (default −15°C).
- System shall automatically return to routine operation. This will happen when the outdoor ambient temperature rises above the selected temperature for this specific mode of operation.

## Smart grid ready

In DHW or heating operation, the commands in the table below can be used.

| IN11 | IN12 | Meaning |
|---|---|---|
| OFF (open) | OFF (open) | Normal operation |
| ON (short) | OFF (open) | Switch-on recommendation*1 |
| OFF (open) | ON (short) | Switch-off command |
| ON (short) | ON (short) | Switch-on command*2 |

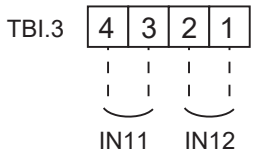


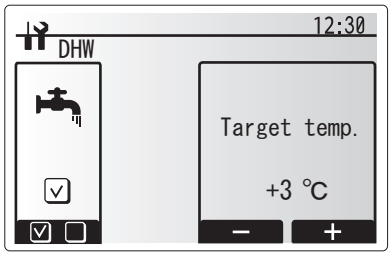


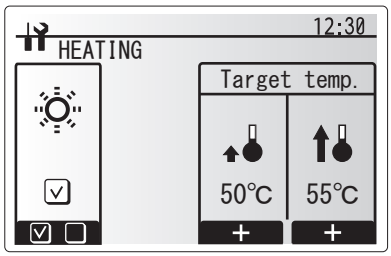


## Floor dry up function

The Floor dry up function automatically changes the target hot water temperature in stages to gradually dry concrete when this particular type of underfloor heating system is installed.

Upon completion of the operation the system stops all the operations except the Freeze stat. operation.
For Floor dry up function, the target flow temp. of Zone1 is the same as that of Zone2.

- This function is not available when a PUHZ-FRP outdoor unit is connected.
- Disconnect wiring to external inputs of room thermostat, demand control, and outdoor thermostat, or the target flow temperature may not be maintained.

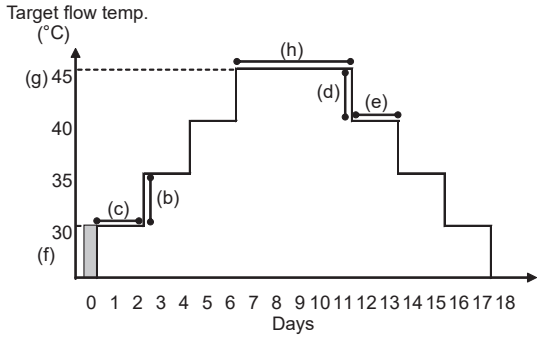


| Functions | | Symbol | Description | Option/Range | Unit | Default |
|---|---|---|---|---|---|---|
| Floor dry up function | | a | Set the function to ON and power on the system using the main remote controller, and the dry up heating operation will start. | ON/OFF | — | OFF |
| Flow temp. (increase) | Flow temp. increase step | b | Sets the increase step of the target flow temperature. | +1 to +10 | °C | +5 |
| | Increase interval | c | Sets the period for which the same target flow temperature is maintained. | 1 to 7 | day | 2 |
| Flow temp. (decrease) | Flow temp. decrease step | d | Sets the decrease step of the target flow temperature. | −1 to −10 | °C | −5 |
| | Decrease interval | e | Sets the period for which the same target flow temperature is maintained. | 1 to 7 | day | 2 |
| Target temperature | Start & Finish | f | Sets the target flow temperature at the start and the finish of the operation. | 20 to 60 | °C | 30 |
| | Max. target temp. | g | Sets the maximum target flow temperature. | 20 to 60 | °C | 45 |
| | Max. temp. period | h | Sets the period for which the maximum target flow temperature is maintained. | 1 to 20 | day | 5 |

### <Password protection>

Password protection is available to prevent unauthorised access to the service menu by untrained persons.

#### Resetting the password

If you forget the password you entered, or have to service a unit somebody else installed, you can reset the password to the factory default of **0000**.

1. From the main settings menu scroll down the functions until Service Menu is highlighted.
2. Press CONFIRM.
3. You will be prompted to enter a password.
4. Hold down buttons F3 and F4 together for 3 seconds
5. You will be asked if you wish to continue and reset the password to default setting.
6. To reset press button F3.
7. The password is now reset to **0000**.

### <Manual reset>

Should you wish to restore the factory settings at any time you should use the manual reset function. Please note this will reset ALL functions to the factory default settings.

Password input screen

Password verify screen

## ■ Energy monitor

End user can monitor accumulated*1 'Consumed electrical energy' and 'Delivered heat energy' in each operation mode*2 on the main remote controller.
*1 Monthly and Year to date
*2 - DHW operation
- Space heating
- Space cooling

Refer to "4.7.2 Main remote controller" for how to check the energy, and "4.3 DIP switch functions" for the details on DIP-SW setting.
Either one of the following two method is used for monitoring.
**Note: Method 1 should be used as a guide. If a certain accuracy is required, method 2 should be used.**

1. Calculation internally [method 1]
Electricity consumption is calculated internally based on the energy consumption of outdoor unit, electric heater, water pump(s) and other auxiliaries. (*3)
Delivered heat is calculated internally by multiplying delta T (Flow and Return temp.) and flow rate measured by the factory fitted sensors.
Set the electric heater capacity and water pump(s) input according to indoor unit model and specs of additional pump(s) supplied locally. (Refer to the menu tree in "4.7.2 Main remote controller")

| | Booster heater1 | Booster heater2 | Immersion heater *1 | Pump1 *2 |
|---|---|---|---|---|
| Default | 2 kW | 4 kW | 0 kW | *** (factory fitted pump) |
| EHST17D-VM2D | 2 kW | 0 kW | 0 kW | *** |
| EHST17D-YM9D | 3 kW | 6 kW | 0 kW | *** |
| ERST17D-VM2D | 2 kW | 0 kW | 0 kW | *** |
| ERST17D-VM2BD | 2 kW | 0 kW | 0 kW | *** |
| ERST17D-VM6D | 2 kW | 4 kW | 0 kW | *** |
| ERST17D-VM6BD | 2 kW | 4 kW | 0 kW | *** |
| ERST17D-YM9BD | 3 kW | 6 kW | 0 kW | *** |
| EHST20D-MED | 0 kW | 0 kW | 0 kW | *** |
| EHST20D-VM2D | 2 kW | 0 kW | 0 kW | *** |
| EHST20D-VM6D | 2 kW | 4 kW | 0 kW | *** |
| EHST20D-YM9D | 3 kW | 6 kW | 0 kW | *** |
| EHST20D-YM9ED | 3 kW | 6 kW | 0 kW | *** |
| EHST20D-TM9D | 3 kW | 6 kW | 0 kW | *** |
| ERST20D-VM2D | 2 kW | 0 kW | 0 kW | *** |
| ERST20D-VM6D | 2 kW | 4 kW | 0 kW | *** |
| ERST20D-YM9D | 3 kW | 6 kW | 0 kW | *** |
| EHST30D-MED | 0 kW | 0 kW | 0 kW | *** |
| EHST30D-VM6ED | 2 kW | 4 kW | 0 kW | *** |
| EHST30D-YM9ED | 3 kW | 6 kW | 0 kW | *** |
| EHST30D-TM9ED | 3 kW | 6 kW | 0 kW | *** |
| ERST30D-VM2ED | 2 kW | 0 kW | 0 kW | *** |
| ERST30D-VM6ED | 2 kW | 4 kW | 0 kW | *** |
| ERST30D-YM9ED | 3 kW | 6 kW | 0 kW | *** |
| EHST20C-MED | 0 kW | 0 kW | 0 kW | *** |
| EHST20C-VM2D | 2 kW | 0 kW | 0 kW | *** |
| EHST20C-VM6D | 2 kW | 4 kW | 0 kW | *** |
| EHST20C-YM9D | 3 kW | 6 kW | 0 kW | *** |
| EHST20C-YM9ED | 3 kW | 6 kW | 0 kW | *** |
| EHST20C-TM9D | 3 kW | 6 kW | 0 kW | *** |

<Table 4.7.1>

| | Booster heater1 | Booster heater2 | Immersion heater *1 | Pump1 *2 |
|---|---|---|---|---|
| ERST20C-VM2D | 2 kW | 0 kW | 0 kW | *** |
| ERST20C-VM6D | 2 kW | 4 kW | 0 kW | *** |
| ERST20C-YM9D | 3 kW | 6 kW | 0 kW | *** |
| EHST30C-MED | 0 kW | 0 kW | 0 kW | *** |
| EHST30C-VM6ED | 2 kW | 4 kW | 0 kW | *** |
| EHST30C-YM9ED | 3 kW | 6 kW | 0 kW | *** |
| EHST30C-TM9ED | 3 kW | 6 kW | 0 kW | *** |
| ERST30C-VM2ED | 2 kW | 0 kW | 0 kW | *** |
| ERST30C-VM6ED | 2 kW | 4 kW | 0 kW | *** |
| ERST30C-YM9ED | 3 kW | 6 kW | 0 kW | *** |
| EHPT17X-VM2D | 2 kW | 0 kW | 0 kW | *** |
| EHPT17X-VM6D | 2 kW | 4 kW | 0 kW | *** |
| EHPT17X-YM9D | 3 kW | 6 kW | 0 kW | *** |
| ERPT17X-VM2D | 2 kW | 0 kW | 0 kW | *** |
| EHPT20X-MED | 0 kW | 0 kW | 0 kW | *** |
| EHPT20X-VM6D | 2 kW | 4 kW | 0 kW | *** |
| EHPT20X-YM9D | 3 kW | 6 kW | 0 kW | *** |
| EHPT20X-YM9ED | 3 kW | 6 kW | 0 kW | *** |
| EHPT20X-TM9D | 3 kW | 6 kW | 0 kW | *** |
| EHPT20X-MHEDW | 0 kW | 0 kW | 3 kW | *** |
| ERPT20X-MD | 0 kW | 0 kW | 0 kW | *** |
| ERPT20X-VM2D | 2 kW | 0 kW | 0 kW | *** |
| ERPT20X-VM6D | 2 kW | 4 kW | 0 kW | *** |
| EHPT30X-MED | 0 kW | 0 kW | 0 kW | *** |
| EHPT30X-YM9ED | 3 kW | 6 kW | 0 kW | *** |
| ERPT30X-VM2ED | 2 kW | 0 kW | 0 kW | *** |
| ERPT30X-VM6ED | 2 kW | 4 kW | 0 kW | *** |

<Table 4.7.2>

*1 Change setting to 3kW when connecting optional immersion heater "PAC-IH03V2-E".
*2 "***" displayed in the energy monitor setting mode means the factory fitted pump is connected as Pump 1 so that the input is automatically calculated.
*3 When the cylinder unit is connected with a PUHZ-FRP or PUMY models, electricity consumption is not calculated internally. To display the electricity consumption, conduct the 2nd method.

When additional pumps supplied locally are connected as Pump2/3, change setting according to specs of the pumps.
When anti-freeze solution (propylene glycol) is used for primary water circuit, set the delivered energy adjustment if necessary.
For further detail of above, refer to "5.7 Main remote controller".

2. Actual measurement by external meter [method 2] (locally supplied)
FTC has external input terminals for 2 'Electric energy meters' and a 'Heat meter'.
If two 'Electric energy meters' are connected, the 2 recorded values will be combined at the FTC and shown on the main remote controller.
(e.g. Meter 1 for H/P power line, Meter 2 for heater power line)
Refer to the [Signal inputs] section in "4.4.2 Connecting inputs/outputs" for more information on connectable electric energy meter and heat meter.

## 4.8. Service and Maintenance

The cylinder unit must be serviced **once a year** by a qualified individual. Servicing and maintenance of the outdoor unit should only be done by a Mitsubishi Electric trained technician with relevant qualifications and experience. Any electrical work should be done by a trades person with the appropriate electrical qualifications. Any maintenance or 'DIY' fixes done by a non-accredited person could invalidate the Warranty and/or result in damage to the cylinder unit and injury to the person.

### ■ Basic Troubleshooting

| No. | Fault symptom | Possible cause | Explanation - Solution |
|---|---|---|---|
| 1 | Main remote controller display is blank. | 1. There is no power supply to main remote controller.<br><br>2. Power is supplied to main remote controller, however, the display on the main remote controller does not appear. | 1. Check LED2 on FTC. (See "4.2 Wiring diagrams".)<br>(i) When LED2 is lit.<br>Check for damage or contact failure of the main remote controller wiring.<br>(ii) When LED2 is blinking.<br>Refer to No. 5 below.<br>(iii) When LED2 is not lit.<br>Refer to No. 4 below.<br>2. Check the following:<br>• Disconnection between the main remote controller cable and the FTC control board<br>• Failure of the main remote controller if "Please Wait" is not displayed.<br>• Refer to No. 2 below if "Please Wait" is displayed. |
| 2 | "Please Wait" remains displayed on the main remote controller. | 1. "Please Wait" is displayed for up to 6 minutes.<br>2. Communication failure between the main remote controller and FTC<br>3. Communication failure between FTC and outdoor unit | 1. Normal operation<br>2, Main remote controller start up checks/procedure.<br>3. (i) If "0%" or "50–99%" is displayed below "Please Wait" there is a communication error between the main remote controller and the FTC control board.<br>• Check wiring connections on the main remote controller.<br>• Replace the main remote controller or the FTC control board.<br>(ii) If "1–49%" is displayed there is a communication error between the outdoor unit's and FTC's control boards.<br>• Check the wiring connections on the outdoor unit control board and the FTC control board.<br>(Ensure S1 and S2 are not cross-wired and S3 is securely wired with no damage. (See "4.4 Field wiring".)<br>• Replace the outdoor unit's and/or the FTC's control boards. |
| 3 | The main screen appears with a press of the "ON" button, but disappears in a second. | The main remote controller operations do not work for a while after the settings are changed in the service menu. This is because the system takes time to apply the changes. | Normal operation<br>The indoor unit is applying updated settings made in the service menu. Normal operation will start shortly. |
| 4 | LED2 on FTC is off. (See "4.2 Wiring diagrams".) | When LED1 on FTC is also off. (See "4.2 Wiring diagrams".)<br><FTC powered via outdoor unit.><br>1. The outdoor unit is not supplied at the rated voltage.<br><br>2. Defective outdoor controller circuit board<br><br>3. FTC is not supplied with 220 to 240 V AC.<br><br>4. FTC failure<br><br>5. Faulty connector wiring | 1. Check the voltage across the terminals L and N or L3 and N on the outdoor power board. (See "4.4 Field wiring".)<br>• When the voltage is not 220 to 240 V AC, check wiring of the outdoor unit and of the breaker.<br>• When the voltage is at 220 to 240 V AC, go to "2." below.<br>2. Check the voltage across the outdoor unit terminals S1 and S2. (See "4.4 Field wiring".)<br>• When the voltage is not 220 to 240 V AC, check the fuse on the outdoor control board and check for faulty wiring.<br>• When the voltage is 220 to 240 V AC, go to "3." below.<br>3. Check the voltage across the indoor unit terminals S1 and S2. (See "4.4 Field wiring".)<br>• When the voltage is not 220 to 240 V AC, check FTC-outdoor unit wiring for faults.<br>• When the voltage is 220 to 240 V AC, go to "4." below.<br>4. Check the FTC control board.<br>• Check the fuse on FTC control board.<br>• Check for faulty wiring.<br>• If no problem found with the wiring, the FTC control board is faulty.<br>5. Check the connector wiring.<br>• When the connectors are wired incorrectly, re-wire the connectors referring to below. (See "4.4 Field wiring".)<br> 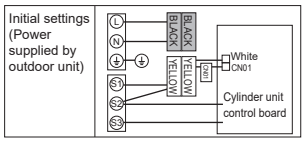 |

| No. | Fault symptom | Possible cause | Explanation - Solution |
|---|---|---|---|
| 4 | LED2 on FTC is off.<br>(See "4.2 Wiring diagrams".) | <FTC powered on independent source><br>1. FTC is not supplied with 220 to 240 V AC.<br><br>2. There are problems in the method of connecting the connectors.<br><br>3. FTC failure | 1. Check the voltage across the L and N terminals on the indoor power supply terminal block. (See "4.4 Field wiring".)<br>• When the voltage is not 220 to 240 V AC, check for faulty wiring to power supply.<br>• When the voltage is 220 to 240 V AC, go to 2. below.<br>2. Check for faulty wiring between the connectors.<br>• When the connectors are wired incorrectly re-wire them correctly referring to below. (See "4.4 Field wiring" and a wiring diagram on the control and electrical box cover.)<br> 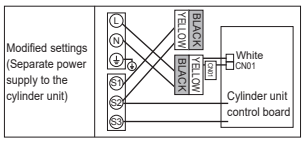 <br><br>• If no problem found with the wiring, go to 3. below.<br>3. Check the FTC control board.<br>• Check the fuse on FTC control board.<br>• Check for faulty wiring.<br>• If no problem found with the wiring, the FTC control board is faulty. |
| | | When LED1 on FTC is lit.<br>Incorrect setting of refrigerant address for outdoor unit<br>(None of the refrigerant address is set to "0".) | Recheck the refrigerant address setting on the outdoor unit.<br>Set the refrigerant address to “0”.<br>(Set refrigerant address using SW1(3-6) on outdoor controller circuit board.) |
| 5 | LED2 on FTC is blinking.<br>(See "4.2 Wiring diagrams".) | When LED1 is also blinking on FTC .<br>Faulty wiring between FTC and outdoor unit | Check for faulty wiring between FTC and outdoor unit. |
| | | When LED1 on FTC is lit.<br>1. Faulty wiring in main remote controller<br>Multiple indoor units have been wired to a single outdoor unit.<br>2. Short-circuited wiring in main remote controller<br><br>3. Main remote controller failure | 1. Check for faulty wiring in main remote controller.<br>The number of indoor units that can be wired to a single outdoor unit is one. Additional indoor units must be wired individually to a single outdoor unit.<br>2.,3. Remove main remote controller wires and check LED2 on FTC. (See "4.2 Wiring diagrams".)<br>• If LED2 is blinking check for short circuits in the main remote controller wiring.<br>• If LED2 is lit, wire the main remote controller again and:<br>- if LED2 is blinking, the main remote controller is faulty;<br>- if LED2 is lit, faulty wiring of the main remote controller has been corrected. |
| 6 | LED4 on FTC is off.<br>(See "4.2 Wiring diagrams".) | 1. SD memory card is NOT inserted into the memory card slot with correct orientation.<br>2. Not an SD standards compliant memory card. | 1. Correctly insert SD memory card in place until a click is heard.<br>2. Use an SD standards compliant memory card. (Refer to installation manual, "4.4.5 Using SD memory card".) |
| | LED4 on FTC is blinking.<br>(See "4.2 Wiring diagrams".) | 1. Full of data.<br>2. Write-protected.<br>3. NOT formatted.<br>4. Formatted in NTFS file system. | 1. Move or delete data, or replace SD memory card with a new one.<br>2. Release the write-protect switch.<br>3. Refer to installation manual, "4.4.5 Using SD memory card".<br>4. FTC is Not compatible with NTFS file system. Use an SD memory card formatted in FAT file system. |
| 7 | No water at hot tap. | 1. Cold main off<br>2. Strainer (local supply) blocked. | 1. Check and open stop cock.<br>2. Isolate water supply and clean strainer. |
| 8 | Cold water at tap. | 1. Hot water run out.<br>2. Prohibit, schedule timer or holiday mode selected or demand control input (IN4) or smart grid ready (switch-off command).<br>3. Heat pump not working.<br>4. Booster heater cut-out tripped.<br><br>5. The earth leakage circuit breaker for booster heater breaker (ECB1) tripped.<br>6. The booster heater thermal cut-out has tripped and cannot be reset using the manual reset button.<br>7. Immersion heater cut-out tripped.<br><br>8. Immersion heater breaker (ECB2) tripped.<br>9. 3-way valve fault | 1. Ensure DHW mode is operating and wait for DHW tank to re-heat.<br>2. Check settings and change as appropriate.<br>3. Check heat pump – consult outdoor unit service manual.<br>4. Check booster heater thermostat and press reset button if safe.<br>Reset button is located on the side of booster heater, covered with white rubber cap. See "4.5.1 Component parts" to find out its position.<br>5. Check the cause and reset if safe.<br>6. Check resistance across the thermal cut-out, if open then the connection is broken and the booster heater will have to be replaced.<br>Contact your Mitsubishi Electric dealer.<br>7. Check immersion heater thermostat and press reset button, located on immersion heater boss, if safe. If the heater has been operated with no water inside it may have failed, so please replace it with a new one.<br>8. Check the cause and reset if safe.<br>9. Check plumbing/wiring to 3-way valve.<br>(i) Manually override 3-way valve using the main remote controller. (Refer to <Manual operation> in "4.7 System setup") If the valve does not still function, go to (ii) below.<br>(ii) Replace 3-way valve coil. If the valve does not still function, go to (iii) below.<br>(iii) Replace 3-way valve. (Refer to Service manual.) |

| No. | Fault symptom | Possible cause | Explanation - Solution |
|---|---|---|---|
| 9 | Water heating takes longer. | 1. Heat pump not working.<br>2. Booster heater cut-out tripped.<br>3. Booster heater breaker (ECB1) tripped.<br>4. The booster heater thermal cut-out has tripped and cannot be reset using the manual reset button.<br>5. Immersion heater cut-out has been triggered.<br>6. Immersion heater breaker (ECB2) tripped.<br>7. Flow rate of the sanitary circuit may be reduced. | 1. Check heat pump – consult outdoor unit service manual.<br>2. Check booster heater thermostat and press reset button if safe. Reset button is located on the side of booster heater, covered with white rubber cap. See "4.5.1 Component parts" to find out its position.<br>3. Check the cause and reset if safe.<br>4. Check resistance across the thermal cut-out, if open then connection is broken and the booster heater will have to be replaced. Contact your Mitsubishi Electric dealer.<br>5. Check immersion heater thermostat and press reset button located on immersion heater boss, if safe. If the heater kept running with no water inside, this may have resulted in failure, so replace it with a new one.<br>6. Check the cause and reset if safe.<br>7. Check the following items<br>• Check for trapped air in water pump (sanitary circuit).<br>• Check if the speed of water pump (sanitary circuit) is set to 2.<br>• Check water pump (sanitary circuit) for malfunction. (Refer to Service manual.)<br>• Replace plate heat exchanger (water - water) or scale trap, if there are a blockage which blocks the sanitary circuit. |
| 10 | Temperature of DHW tank water dropped. | When DHW operation is not running, the DHW tank emits heat and the water temperature decreases to a certain level. If water in the DHW tank is reheated frequently because of a significant drop in water temperature, check for the following.<br>1. Water leakage in the pipes that connect to the DHW tank<br>2. Insulation material coming loose or off.<br>3. 3-way valve failure<br>4. Water pump (sanitary circuit) speed setting failure | 1. Take the following measures.<br>• Retighten the nuts holding the pipes onto the DHW tank.<br>• Replace seal materials.<br>• Replace the pipes.<br>2. Fix insulation.<br>3. Check plumbing/wiring to 3-way valve.<br>(i) Manually override 3-way valve using the main remote controller. (Refer to <Manual operation> in "4.7 System setup".) If the valve does not still function, go to (ii) below.<br>(ii) Replace 3-way valve motor. If the valve does not still function, go to (iii) below.<br>(iii) Replace 3-way valve. (Refer to Sevice manual.)<br>4. Water pump (sanitary circuit) MUST be set to speed 2. When it set to speed 1, hot water would be mixed with cold water due to circulation. |
| 11 | Hot or warm water from cold tap. | Heat of hot water pipe is transferred to cold water pipe. | Insulate/re-route pipework. |
| 12 | Water leakage | 1. Poorly sealed connections of water circuit components<br>2. Water circuit components reaching the end of life | 1. Tighten connections as required.<br>2. Refer to PARTS CATALOG for expected part lifetimes and replace them as necessary. |
| 13 | Heating system does not reach the set temperature. | 1. Prohibit, schedule timer or holiday mode selected or demand control input (IN4) or smart grid ready (switch-off command).<br>2. Check settings and change as appropriate.<br>3. The temperature sensor is located in a room that has a different temperature relative to that of the rest of the house.<br>4. Heat pump not working.<br>5. Booster heater cut-out tripped.<br>6. Booster heater breaker (ECB1) tripped.<br>7. The booster heater thermal cut-out tripped and cannot be reset using the manual reset button.<br>8. Incorrectly sized heat emitter<br>9. 3-way valve failure<br>10. Battery problem (wireless control only)<br>11. If a mixing tank is installed, the flow rate between the mixing tank and the cylinder unit is less than that between the mixing tank and the local system.<br>12. Malfunction of pump or mixing valve<br>13. Valves on heating system are closed. | 1. Check settings and change as appropriate.<br>2. Check the battery power and replace if flat.<br>3. Relocate the temperature sensor to a more suitable room.<br>4. Check heat pump – consult outdoor unit service manual.<br>5. Check booster heater thermostat and press reset button if safe. Reset button is located on the side of booster heater, covered with white rubber cap. (See "4.5.1 Componant parts" for position.)<br>6. Check the cause of the trip and reset if safe.<br>7. Check resistance across the thermal cut-out, if open then the connection is broken and the booster heater will have to be replaced. Contact your Mitsubishi Electric dealer.<br>8. Check the heat emitter surface area is adequate Increase size if necessary.<br>9. Check plumbing/wiring to 3-way valve.<br>(i) Manually override 3-way valve using the main remote controller. (Refer to <Manual operation> in "4.7 System setup".) If the 3-way valve does not function, go to (ii) below.<br>(ii) Replace 3-way valve motor. If the 3-way valve coil is replaced but the 3-way valve does not function go to (iii) below.<br>(iii) Replace 3-way valve. (Refer to Service manual.)<br>10. Check the battery power and replace if flat.<br>11. Increase the flow rate between the mixing tank and the cylinder unit decrease that between the mixing tank and the local system.<br>12. Contact installer.<br>13. Open the valves. |

| No. | Fault symptom | Possible cause | Explanation - Solution |
|---|---|---|---|
| 14 | Heating system does not reach the set lower temperature. | Heating system operates depending on the heating load to prevent low-load heating system from the frequent switching (ON/OFF) of the compressor. | Normal operation, no action necessary. |
| 15 | In 2-zone temperature control, only Zone2 does not reach the set temperature. | 1. When Zone1 and Zone2 are both in heating mode, the hot water temperature in Zone2 does not exceed that in Zone1.<br>2. Faulty wiring of motorized mixing valve<br>3. Faulty installation of motorized mixing valve<br>4. Incorrect setting of Running time<br>5. Motorized mixing valve failure | 1. Normal action no action necessary.<br>2. Refer to installation manual, "4.4.3 Wiring for 2-zone temperature control".<br>3. Check for correct installation. (Refer to the manual included with each motorized mixing valve.)<br>4. Check for correct setting of Running time.<br>5. Inspect the mixing valve. (Refer to the manual included with each motorized mixing valve.) |
| 16 | When a PUHZ-FRP outdoor unit is connected, DHW or Heating operation cannot run. | The outdoor unit is set to have operation of the indoor unit of air conditioner take precedence over that of the cylinder unit, and in the main remote controller settings "Electric heater (Heating)" or "Electric heater (DHW)" is turned off. | Turn ON Electric heater (Heating) or Electric heater (DHW) using the main remote controller. |
| 17 | When a PUHZ-FRP outdoor unit is connected and is in heat recovery operation, the set temperature is not reached. | When the outdoor unit is set to have cooling operation of the indoor unit of air conditioner take precedence over that of the cylinder unit, the outdoor unit controls the frequency of the compressor according to the load of air conditioner. The DHW and heating run according to that frequency. | Normal operation no action necessary.<br>If Air-to-Water system is given priority in operation, comp Hz can be regulated depending on the load of DHW or Heating. For more details, refer to the PUHZ-FRP installation manual. |
| 18 | After DHW operation room temperature rises slightly. | At the end of the DHW mode operation the 3-way valve diverts hot water away from the DHW circuit into space heating circuit.<br>This is done to prevent the cylinder unit components from overheating.<br>The amount of hot water directed into the space heating circuit varies according to the type of the system and of the pipe run between the plate heat exchanger and the cylinder unit. | Normal operation no action necessary. |
| 19 | The room temperature rises during DHW operation. | 3-way valve failure | Check the 3-way valve.<br>(i) Manually override 3-way valve using the main remote controller. (Refer to <Manual operation> in "4.7 System setup".) If the 3-way valve does not function, go to (ii) below.<br>(ii) Replace 3-way valve coil. If the 3-way valve coil is replaced but the 3-way valve does not function go to (iii) below.<br>(iii) Replace 3-way valve. (Refer to Service manual.) |
| 20 | Water discharges from pressure relief valve.<br>(Primary circuit) | 1. If continual – pressure relief valve could bite foreign objects and the valve seat may be damaged.<br>2. If intermittent – expansion vessel charge may have reduced/bladder perished. | 1. Turn the handle on the pressure relief valve several turns. If leakage persists, replace the pressure relief valve with a new one.<br>2. Check pressure in expansion vessel.<br>Recharge to 1 bar if necessary.<br>If bladder perished replace expansion vessel with a new one. |
| 21 | Water discharges from pressure relief valve.<br>(Sanitary circuit) | 1. If continual – field supplied pressure reducing valve not working.<br>2. If continual – pressure relief valve could bite foreign objects and the valve seat may be damaged.<br>3. If intermittent – expansion vessel charge may have reduced/bladder perished.<br>4. DHW tank may have subjected to backflow. | 1. Check function of pressure reducing valve and replace if necessary.<br>2. Turn the handle on the pressure relief valve several turns. If leakage persists, replace the pressure relief valve with a new one.<br>3. Check gas-side pressure in expansion vessel.<br>Recharge to correct precharge pressure if necessary.<br>If bladder perished replace expansion vessel with a new one with appropriate pre-charge.<br>4. Check the pressure in DHW tank. If pressure in DHW tank is similar to that in the incoming mains, cold water supply that merges with incoming mains water supply could flow back to DHW tank. Investigate source of back-feed and rectify error in pipework/fitting configuration. Adjust pressure in cold supply. |
| 22 | Water discharges from temperature and pressure relief valve<br>(EHPT20X-MHEDW only)<br>(Sanitary circuit) | 1. If continual – field supplied pressure reducing valve not working.<br>2. If continual – temperature and pressure relief valve could bite foreign objects and the valve seat may be damaged.<br>3. If intermittent – expansion vessel charge may have reduced/bladder perished.<br>4. DHW tank may have subjected to backflow.<br>5. Unit has overheated – thermal controls have failed. | 1. Check function of pressure reducing valve and replace if necessary.<br>2. Turn the handle on the temperature and pressure relief valve several turns. If leakage persists, replace the temperature and pressure relief valve with a new one.<br>3. Check gas-side pressure in expansion vessel.<br>Recharge to correct precharge pressure if necessary.<br>If bladder perished replace expansion vessel with a new one with appropriate pre-charge.<br>4. Check pressure in DHW tank. If pressure in DHW tank is similar to that in the incoming mains, cold water supply that merges with incoming mains water supply could flow back to DHW tank. Investigate source of back-feed and rectify error in pipework/fitting configuration. Adjust pressure in cold supply.<br>5. Switch off power to the heat pump and immersion heaters.<br>Leave water running.<br>Wait until discharge stops. Isolate water supply and replace if faulty. |

| No. | Fault symptom | Possible cause | Explanation - Solution |
|---|---|---|---|
| 23 | Water discharges from expansion relief valve - part of Inlet Control Group (EHPT20X-MHEDW only) (sanitary circuit) | 1. If continual – field supplied pressure reducing valve not working.<br>2. If continual – expansion relief valve may be damaged.<br>3. If intermittent – expansion vessel charge may have reduced/bladder perished.<br>4. DHW tank may have subjected to backflow.<br>5. Unit has overheated – thermal controls have failed. | 1. Check function of pressure reducing valve and replace if necessary.<br>2. Turn the handle on the expansion relief valve to check for foreign objects inside. If the problem is not still solved, replace the expansion relief valve with a new one.<br>3. Check gas-side pressure in expansion vessel. Recharge to correct precharge pressure if necessary. If bladder perished replace expansion vessel with a new one with appropriate precharge.<br>4. Check pressure in DHW tank. If pressure in DHW tank is similar to that in the incoming mains, cold water supply that merges with incoming mains water supply could flow back to DHW tank. Investigate source of back-feed and rectify error in pipework/fitting configuration. Adjust pressure in cold supply.<br>5. Switch off power to the heat pump and immersion heaters. Leave water running. Wait until discharge stops. Isolate water supply and replace if faulty. |
| 24 | Noisy water circulation pump | Air in water circulation pump | Use manual and automatic air vents to remove air from system.<br>Top up water if necessary to achieve 1 bar on primary circuit. |
| 25 | Noise during hot water draw off typically worse in the morning. | 1. Loose airing cupboard pipework<br>2. Heaters switching on/off | 1. Install extra pipe fastening clips.<br>2. Normal operation no action necessary. |
| 26 | Mechanical noise heard coming from the cylinder unit. | 1. Heaters switching on/off<br>2. 3-way valve changing position between DHW and heating mode | Normal operation no action necessary. |
| 27 | Water circulation pump runs for a short time unexpectedly. | Water circulation pump jam prevention mechanism (routine) to inhibit the build-up of scale | Normal operation no action necessary. |
| 28 | Milky/Cloudy water (Sanitary circuit) | Oxygenated water | Water from any pressurised system will release oxygen bubbles when water is running. The bubbles will settle out. |
| 29 | Heating mode has been on standby for a long time (does not start operation smoothly.) | The time of “Delay” set in “Economy settings for pump” is too short. (Go to “Service menu” → “Auxiliary settings” → “Economy settings for pump”). | Increase the time of “Delay” in “Economy settings for pump” . |
| 30 | The cylinder unit that was running in the heating mode before power failure is running in the DHW mode after power recovery. | The cylinder unit is designed to run in an operation mode with a higher priority (i.e. DHW mode in this case) at power recovery. | • Normal operation.<br>• After the DHW max. operation time has elapsed or the DHW max. temperature has been reached, the DHW mode switches to the other mode (ex. Heating mode). |
| 31 | Cooling mode is NOT available. | DIP SW2-4 is OFF. | Turn DIP SW2-4 to ON. (Refer to “4.3 DIP switch functions”.) |
| 32 | The cooling system does not cool down to the set temperature. | 1. When the water in the circulation circuit is unduly hot, Cooling mode starts with a delay for the protection of the outdoor unit.<br>2. When the outdoor ambient temperature is lower than the preset temperature that activates the freeze stat function, Cooling mode does not start running. | 1. Normal operation<br>2. To run Cooling mode overriding the freeze stat function, adjust the preset temperature that activates the freeze stat function. (Refer to <Freeze stat function> in “4.7 System setup”.) |
| 33 | The electric heaters are activated shortly after DHW or LP mode starts running after Cooling mode. | The setting time period of Heat-pump-only operation is short. | Adjust the setting time period of Heat-pump only operation. (Refer to <Electric heater (DHW)> in “4.7 System setup”.) |
| 34 | During DHW or LP mode following the cooling mode, error L6 (circulation water freeze protection error ) occurs and the system stops all the operations. | The unit runs in Cooling mode when the outdoor ambient temperature is lower than 10ºC (outside of the guaranteed operating range).<br>(When defrosting operation is running at such a low outdoor ambient temperature after Cooling mode is switched to DHW or LP mode, the water temperature in the cooling circuit drops too low, which could result in L6 error to stop all the operations. | Do not run Cooling operation when the outdoor ambient temperature is lower than 10ºC.<br>To automatically stop or recover only Cooling operation and keep other operations running, the freeze stat function can be used. Set the preset temperature that activates the freeze stat function to adjust the outdoor ambient temperature as follows. (Refer to <Freeze stat function> in “4.7 System setup”.)<br><br>**Outdoor ambient temperature** / **Cooling operation**<br>3ºC higher than the preset temperature / Stop<br>5ºC higher than the preset temperature / Recover |

<table>
<tr><th>No.</th><th>Fault symptom</th><th>Possible cause</th><th>Explanation - Solution</th></tr>
<tr><td>35</td><td>The energy monitor value seems not correct.<br><br>Note:<br>There could be some discrepancies between the actual and the calculated values.<br>If you seek for accuracy, please make sure to connect power meter(s) and heat meter to FTC board. Both should be locally supplied.</td><td>1. Incorrect setting of the energy monitor<br><br>2. Non-connectable type of external meter (local supply) is connected.<br>3. External meter (local supply) failure<br><br>4. FTC board failure</td><td>1. Check the setting by following the procedure below.<br>(1) Check if the DIP switch is set as the table below.<br>Consumed electric energy<br><table><tr><th>SW3-4</th><th>Electric energy meter (Local supply)</th></tr><tr><td>OFF</td><td>Without</td></tr><tr><td>ON</td><td>With</td></tr></table>Delivered heat energy<br><table><tr><th>SW3-8</th><th>Heat meter (Local supply)</th></tr><tr><td>OFF</td><td>Without</td></tr><tr><td>ON</td><td>With</td></tr></table>(2) In the case external electric energy meter and/or heat meter is not used, check if the setting for electric heater and water pump(s) input is correct by referring to “Energy monitor” in “4.7 System setup”.<br>(3) In the case external electric energy meter and/or heat meter is used, check if the unit of output pulse on external meter matches with the one set at the main remote controller by referring to “Energy monitor” in “4.7 System set-up”.<br>2. Check if the external meter (local supply) is connectable type by referring to “Energy monitor” in “4.7 System setup”.<br>3. Check if signal is sent to IN8 to IN10 properly. (Refer to section 4.2 Wiring diagram)<br>Replace the external heat meter if defective.<br>4. Check the FTC control board.<br>• Check for faulty wiring.<br>• If no problem found with the wiring, the FTC control board is faulty. Replace the board.</td></tr>
<tr><td>36</td><td>Heat pump is forced to turn ON and OFF.</td><td>Smart grid ready input (IN11 and IN12) is used, and switch-on and off commands are input.</td><td>Normal operation no action necessary.</td></tr>
</table>

## Annual Maintenance

It is essential that the cylinder unit is serviced at least once a year by a qualified individual. Any spare parts required should be purchased from Mitsubishi Electric. NEVER bypass safety devices or operate the unit without them being fully operational.

**<Annual maintenance points>**

Use the Annual Maintenance Log Book as a guide to carrying out the necessary checks on the cylinder unit and outdoor unit.

## ■ Annual Maintenance

It is essential that the cylinder unit is serviced at least once a year by a qualified individual. Any required parts should be purchased from Mitsubishi Electric. NEVER bypass safety devices or operate the unit without them being fully operational. For more details, refer to service handbook.

**Notes**
- **Within the first couple of months of installation, remove and clean the cylinder unit's strainer plus any additional filter items that are fitted external to the cylinder unit. This is especially important when installing on an old/existing pipe work system.**
- **The PRV valve and T&P valve (No. 8, 20 and 21 on Figure 4.5.1) should be checked annually by turning the knob manually so that the medium is discharged,**
  **thus cleaning the seal seat.**



In addition to annual servicing it is necessary to replace or inspect some parts after a certain period of system operation. Please see tables below for detailed instructions. Replacement and inspection of parts should always be done by a competent person with relevant training and qualifications.

**Parts which require regular replacement**

| Parts | Replace every | Possible failures |
|---|---|---|
| Pressure relief valve (PRV)<br>Manometer<br>Inlet control group (ICG)*<br>Mud trap | 6 years | Water leakage |

***** OPTIONAL PARTS for UK

**Parts which require regular inspection**

| Parts | Check every | Possible failures |
|---|---|---|
| Pressure relief valve (3bar)<br>Temperature and pressure relief valve | 1 year (turning the knob manually) | PRV would be fixed and expansion vessel would burst |
| Immersion heater | 2 years | Earth leakage causing circuit breaker to activate (Heater is always OFF) |
| Water circulation pump (Primary circuit) | 20,000 hrs (3 years) | Water circulation pump failure |
| Magnetic filter | 3 years | Flow rate decrease due to clogging |
| Mud trap | 1 year | Flow rate decrease due to clogging |

**Parts which must NOT be re-used when servicing**
* O-ring
* Gasket

**Note:**
- **Always replace the gasket for pump with a new one at each regular maintenance (every 20,000 hours of use or every 3 years).**

**<Draining partcles from the magnetic filter>**
**WARNING: DRAINED WATER MAY BE VERY HOT**
1. Turn OFF the unit via the user interface.
2. Turn OFF the circuit breaker.
3. Check if body of the magnet filter is still screwed tight (a).
4. Close the isolating valves.
5. Hold the motor of mixing valve and pull hard to remove it from the valve.
6. Put a suitable bottle below the magnetic filter.
7. Open the cap of the filter with 2 spanners (b).
8. Collect the water and particles in the bottle.
9. Wash the inside mesh and magnet and remove particles from them.
10. Put the inside mesh and magnet back into the filter.
11. Screw the cap with 2 spanners.
12. Reattach the motor on the mixing valve.
13. Open the isolating valves.
14. Check the pressure of the water circuit.

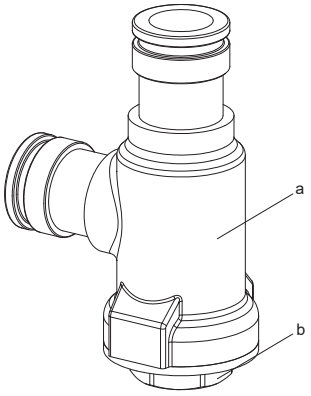


a body
b cap

**<Draining dirt from the mud trap>**
**WARNING: DRAINED WATER MAY BE VERY HOT**
1. Turn OFF the unit via the user interface.
2. Turn OFF the circuit breaker.
3. Check if upper and lower parts of the mud trap are still screwed tight (a, c).
4. Take off the magnetic sleeve (b).
5. Unscrew the drain cap (e).
6. Connect a drain hose to the bottom of the mud trap so that the water and dirt can be collected in a suitable bottle.
7. Open the drain valve for a couple of seconds (d).
8. After dirt drained, close the drain valve.
9. Screw the drain cap back on.
10. Reattach the magnetic sleeve.
11. Check the pressure of the water circuit.

Notes:
- When checking the mud trap for tightness, hold it firmly, so as NOT to apply stress to the water piping.
- To prevent dirt from remaining in the mud trap, take off the magnetic sleeve.
- Always first unscrew the drain cap, and connect a drain hose to the bottom of the water filter, then open the drain valve.

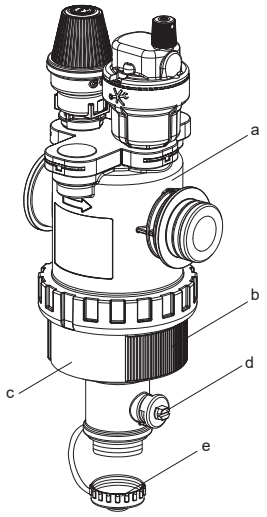


a upper part
b magnetic sleeve
c lower part
d drain valve
e drain cap

**<Draining the cylinder unit and its sanitary heating circuit (local)>**
**WARNING: DRAINED WATER MAY BE VERY HOT**

1. Before attempting to drain the cylinder unit isolate from the electrical supply to prevent the immersion and booster heaters burning out.
2. Isolate cold water feed to DHW tank.
3. Open a hot water tap to allow draining without creating a vacuum.
4. Attach a hose to the DHW tank drain cocks (No. 22 and 23 on Figure 4.7.2). The hose should be able to withstand heat as the draining water could be very hot. The hose should drain to a place lower than the DHW tank bottom to encourage siphoning. Begin draining by opening drain cock.
5. When the DHW tank is drained close drain cock and hot tap.
6. For primary circuit, attach hose to water circuit drain cocks (No. 6 on Figure 4.5.1). The hose should be able to withstand heat as the draining water could be very hot. The hose should drain to a place lower than the drain cock to encourage siphoning. Open the pump valves and the strainer valves.
7. Water remains in the strainer still after the cylinder unit was drained.
   Drain the strainer by removing the strainer cover.

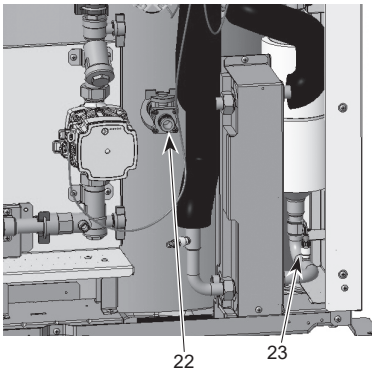


<Figure 4.7.2>

## ■ Error Codes

| Code | Error | Action |
|---|---|---|
| L3 | Circulation water temperature overheat protection | Flow rate may be reduced. Check for;<br>• Water leakage<br>• Strainer blockage<br>• Water circulation pump function (Error code may display during filling of primary circuit, complete filling and reset error code.) |
| L4 | DHW tank water temperature overheat protection | Check the immersion heater and it's contactor. |
| L5 | Indoor unit temperature thermistor (THW1, THW2, THW5A, THW5B, THW6, THW7, THW8, THW9) failure | Check resistance across the thermistor. |
| L6 | Circulation water freeze protection | See Action for L3. |
| L8 | Heating operation error | Check and re-attach any thermistors that may have become dislodged. |
| L9 | Low primary circuit flow rate detected by flow sensor or flow switch (flow switches 1, 2, 3) | See Action for L3. If the flow sensor or flow switch itself does not work, replace it.<br>**Caution: The pump valves may be hot, please take care.** |
| LA | Pressure sensor failure | Check pressure sensor cable for damage or loose connections. |
| LB | High pressure protection | • Flow rate of the heating circuit may be reduced. Check water circuit.<br>• Plate heat exchanger may be clogged. Check the plate heat exchanger.<br>• Outdoor unit failure. Check refrigerant volume, valve, LEV coil and pipe crushing of outdoor unit. |
| LC | Boiler circulation water temperature overheat protection | Check if the setting temperature of the Boiler for heating exceeds the restriction. (See the manual of the thermistors "PAC-TH012HT-E")<br>Flow rate of the heating circuit from the boiler may be reduced. Check for<br>• water leakage,<br>• strainer blockage<br>• water circulation pump function. |
| LD | Boiler temperature thermistor (THWB1) failure | Check resistance across the thermistor. |
| LE | Boiler operation error | See Action for L8. Check the status of the boiler. |
| LF | Flow sensor failure | Check flow sensor cable for damage or loose connections. |
| LH | Boiler circulation water freeze protection | Flow rate of the heating circuit from the boiler may be reduced. Check for<br>• water leakage<br>• strainer blockage<br>• water circulation pump function. |
| LJ | DHW operation error (type of external plate HEX) | • Check for disconnection of DHW tank water lower temp. thermistor (THW5B).<br>• Flow rate of the sanitary circuit may be reduced.<br>• Check for water circulation pump function. (primary / sanitary) |
| LL | Setting errors of DIP switches on FTC control board | For boiler operation, check that DIP SW1-1 is set to ON (With Boiler) and DIP SW2-6 is set to ON (With Mixing Tank).<br>For 2-zone temperature control, check DIP SW2-7 is set to ON (2-zone) and DIP SW2-6 is set to ON (With Mixing Tank). |
| LP | Out of water flow rate range for outdoor heat pump unit | Check the installation Table 4.6.3.<br>Check remote controller settings (Service menu / heat pump flow rate range)<br>See Action for L3. |
| P1 | Thermistor (Room temp.) (TH1) failure | Check resistance across the thermistor. |
| P2 | Thermistor (Ref. liquid temp.) (TH2) failure | Check resistance across the thermistor. |
| P6 | Anti-freeze protection of plate heat exchanger | See Action for L3.<br>Check for correct amount of refrigerant. |
| J0 | Communication failure between FTC and wireless receiver | Check connection cable for damage or loose connections. |
| J1 - J8 | Communication failure between wireless receiver and wireless remote controller | Check wireless remote controller's battery is not flat.<br>Check the pairing between wireless receiver to wireless remote controller.<br>Test the wireless communication. (See the manual of wireless system) |
| E0 - E5 | Communication failure between main remote controller and FTC | Check connection cable for damage or loose connections. |
| E6 - EF | Communication failure between FTC and outdoor unit | Check that the outdoor unit has not been turned off.<br>Check connection cable for damage or loose connections.<br>Refer to outdoor unit service manual. |
| E9 | Outdoor unit receives no signal from indoor unit. | Check both units are switched on. Check connection cable for damage or loose connections. Refer to outdoor unit service manual. |
| EE | Combination error between FTC and outdoor unit | Check combination of FTC and outdoor unit. |
| U*, F*, PL | Outdoor unit failure | Refer to outdoor unit service manual. |
| A* | M-NET communication error | Refer to outdoor unit service manual. |

**Note: To cancel error codes please switch system off (Press button F4(RESET) on main remote controller).**

## ■ Engineers Forms

Should settings be changed from default, please enter and record new setting in 'Field Setting' column. This will ease resetting in the future should the system use change or the circuit board need to be replaced.

**Commissioning/Field settings record sheet**

| Main remote controller screen | | | | | Parameters | Default setting | Field setting | Notes |
|---|---|---|---|---|---|---|---|---|
| Main | | | Zone1 heating room temp. | | 10°C to 30°C | 20°C | | |
| | | | Zone2 heating room temp. *1 | | 10°C to 30°C | 20°C | | |
| | | | Zone1 heating flow temp. | | 20°C to 60°C | 45°C | | |
| | | | Zone2 heating flow temp. *2 | | 20°C to 60°C | 35°C | | |
| | | | Zone1 cooling flow temp. *3 | | 5°C to 25°C | 15°C | | |
| | | | Zone2 cooling flow temp. *3 | | 5°C to 25°C | 20°C | | |
| | | | Zone1 heating compensation curve | | −9°C to + 9°C | 0°C | | |
| | | | Zone2 heating compensation curve *2 | | −9°C to + 9°C | 0°C | | |
| | | | Holiday mode | | Active/Non active/Set time | — | | |
| Option | | | Forced DHW operation | | On/Off | — | | |
| | | | DHW | | On/Off/Timer | On | | |
| | | | Heating/Cooling *3 | | On/Off/Timer | On | | |
| | | | Energy monitor | | Consumed electrical energy/Delivered energy | — | | |
| Setting | DHW | | Operation mode | | Normal/Eco *4 | Normal | | |
| | | | DHW max. temp. | | 40°C to 60°C *5 | 50°C | | |
| | | | DHW temp. drop | | 5°C to 30°C | 10°C | | |
| | | | DHW max. operation time | | 30 to 120 min | 60 min | | |
| | | | DHW mode restriction | | 30 to 120 min | 30 min | | |
| | | | DHW recharge | | Large/Standard | Standard | | |
| | Legionella prevention | | Active | | Yes/No | Yes | | |
| | | | Hot water temp. | | 60°C to 70°C *5 | 65°C | | |
| | | | Frequency | | 1 to 30 days | 15 days | | |
| | | | Start time | | 00.00 to 23.00 | 03.00 | | |
| | | | Max. operation time | | 1 to 5 hours | 3 hours | | |
| | | | Duration of maximum temp. | | 1 to 120 min | 30 min | | |
| | Heating/Cooling *3 | | Zone1 operation mode | | Heating room temp./ Heating flow temp./ Heating compensation curve/ Cooling flow temp. | Room temp. | | |
| | | | Zone2 operation mode *2 | | Heating room temp./ Heating flow temp./ Heating compensation curve/ Cooling flow temp. | Compensation curve | | |
| | Compensation curve | Hi flow temp. set point | Zone1 outdoor ambient temp. | | −30°C to +33°C *6 | −15°C | | |
| | | | Zone1 flow temp. | | 20°C to 60°C | 50°C | | |
| | | | Zone2 outdoor ambient temp. *2 | | −30°C to +33°C *6 | −15°C | | |
| | | | Zone2 flow temp. *2 | | 20°C to 60°C | 40°C | | |
| | | Lo flow temp. set point | Zone1 outdoor ambient temp. | | −28°C to +35°C *7 | 35°C | | |
| | | | Zone1 flow temp. | | 20°C to 60°C | 25°C | | |
| | | | Zone2 outdoor ambient temp. *2 | | −28°C to +35°C *7 | 35°C | | |
| | | | Zone2 flow temp.*2 | | 20°C - 60°C | 25°C | | |
| | | Adjust | Zone1 outdoor ambient temp. | | −29°C to +34°C *8 | — | | |
| | | | Zone1 flow temp. | | 20°C to 60°C | — | | |
| | | | Zone2 outdoor ambient temp. *2 | | −29°C to +34°C *8 | — | | |
| | | | Zone2 flow temp. *2 | | 20°C to 60°C | — | | |
| | Holiday | | DHW | | Active/Non active | Non active | | |
| | | | Heating/Cooling *3 | | Active/Non active | Active | | |
| | | | Zone1 heating room temp. | | 10°C to 30°C | 15°C | | |
| | | | Zone2 heating room temp. *1 | | 10°C to 30°C | 15°C | | |
| | | | Zone1 heating flow temp. | | 20°C to 60°C | 35°C | | |
| | | | Zone2 heating flow temp. *2 | | 20°C to 60°C | 25°C | | |
| | | | Zone1 cooling flow temp. *3 | | 5°C to 25°C | 25°C | | |
| | | | Zone2 cooling flow temp. *3 | | 5°C to 25°C | 25°C | | |
| | Initial settings | | Language | | EN/FR/DE/SV/ES/IT/DA/NL/FI/NO/PT/BG/PL/CZ/RU/TR/SL | EN | | |
| | | | °C/°F | | °C/°F | °C | | |
| | | | Summer time | | On/Off | Off | | |
| | | | Temp. display | | Room/DHW tank/Room&DHW tank /Off | Off | | |
| | | | Time display | | hh:mm/hh:mm AM/AM hh:mm | hh:mm | | |
| | | | Room sensor settings for Zone1 | | TH1/Main RC/Room RC1 to 8/"Time/Zone" | TH1 | | |
| | | | Room sensor settings for Zone2 *2 | | TH1/Main RC/Room RC1 to 8/"Time/Zone" | TH1 | | |
| | | | Room RC zone select *2 | | Zone1/Zone2 | Zone1 | | |
| | Service menu | | Thermistor adjustment | THW1 | −10°C to +10°C | 0°C | | |
| | | | | THW2 | −10°C to +10°C | 0°C | | |
| | | | | THW5A | −10°C to +10°C | 0°C | | |
| | | | | THW5B | −10°C to +10°C | 0°C | | |
| | | | | THW6 | −10°C to +10°C | 0°C | | |
| | | | | THW7 | −10°C to +10°C | 0°C | | |
| | | | | THW8 | −10°C to +10°C | 0°C | | |
| | | | | THW9 | −10°C to +10°C | 0°C | | |
| | | | | THW10 | −10°C to +10°C | 0°C | | |
| | | | | THWB1 | −10°C to +10°C | 0°C | | |
| | | | Auxiliary settings | Economy settings for pump. | On/Off *9 | On | | |
| | | | | | Delay (3 to 60 min) | 10 min | | |
| | | | | Electric heater (Heating) | Space heating: On (used)/Off (not used) | On | | |
| | | | | | Electric heater delay timer (5 to 180 min) | 30 min | | |
| | | | | Electric heater (DHW) | Booster heater DHW: On (used)/Off (not used) | On | | |
| | | | | | Immersion heater DHW: On (used)/Off (not used) | On | | |
| | | | | | Electric heater delay timer (15 to 30 min) | 15 min | | |
| | | | | Mixing valve control | Running (10 to 240 sec) | 120 sec | | |
| | | | | | Interval (1 to 30 min) | 2 min | | |
| | | | | Flow sensor *10 | Minimum (0 to 100L/min) | 5 L/min | | |
| | | | | | Maximum (0 to 100L/min) | 100 L/min | | |
| | | | | Analog output | Interval (1 to 30 min) | 5 min | | |
| | | | | | Priority (Normal/High) | Normal | | |

## ■ Engineers Forms

**Commissioning/Field settings record sheet (continued from the previous page)**

| Main remote controller screen | | | | | Parameters | | | Default setting | Field setting | Notes |
|---|---|---|---|---|---|---|---|---|---|---|
| Setting | Service menu | Pump speed | DHW | | Pump speed (1 to 5) | | | 5 | | |
| | | | Heating/Cooling | | Pump speed (1 to 5) | | | 5 | | |
| | | Heat source setting | | | Standard/Heater/Boiler/Hybrid *11 | | | Standard | | |
| | | Heat pump setting | Heat pump flow rate range | | Minimum(0 to 100L/min) | | | 5 L/min | | |
| | | | | | Maximum(0 to 100L/min) | | | 100 L/min | | |
| | | | Quiet mode | | Day (Mon to Sun) | | | — | | |
| | | | | | Time | | | 0:00 - 23:45 | | |
| | | | | | Quiet level (Normal/ Level1/ Level2) | | | Normal | | |
| | | Operation settings | Heating operation | Flow temp.range *13 | Minimum.temp.(20 to 45°C) | | | 30°C | | |
| | | | | | Maximum.temp.(35 to 60°C) | | | 50°C | | |
| | | | | Room temp.control *14 | Mode (Normal/Fast) | | | Normal | | |
| | | | | | Interval (10 to 60min) | | | 10min | | |
| | | | | Heat pump thermo diff.adjust | On/Off *9 | | | On | | |
| | | | | | Lower limit (−9 to −1°C) | | | -5°C | | |
| | | | | | Upper limit (+3 to +5°C) | | | 5°C | | |
| | | | Freeze stat function *15 | | Outdoor ambient temp. (3 to 20°C) / ** | | | 5°C | | |
| | | | Simultaneous operation (DHW/Heating) | | On/Off *9 | | | Off | | |
| | | | | | Outdoor ambient temp. (−30 to +10°C) *6 | | | −15°C | | |
| | | | Cold weather function | | On/Off *9 | | | Off | | |
| | | | | | Outdoor ambient temp. (−30 to −10°C) *6 | | | −15°C | | |
| | | | Boiler operation | | Hybrid settings | Outdoor ambient temp. (−30 to +10°C) *6 | | −15°C | | |
| | | | | | | Priority mode (Ambient/Cost/$CO_2$) *16 | | Ambient | | |
| | | | | | | Outdoor ambient temp. rise (+1 to +5 °C) | | +3 °C | | |
| | | | | | Intelligent settings | Energy price *17 | Electricity (0.001 to 999 */kWh) | 0.5 */kWh | | |
| | | | | | | | Boiler (0.001 to 999 */kWh) | 0.5 */kWh | | |
| | | | | | | $CO_2$ emission | Electricity (0.001 to 999 kg -$CO_2$/kWh) | 0.5 kg -$CO_2$/kWh | | |
| | | | | | | | Boiler (0.001 to 999 kg -$CO_2$/kWh) | 0.5 kg -$CO_2$/kWh | | |
| | | | | | | Heat source | Heat pump capacity (1 to 40 kW) | 11.2 kW | | |
| | | | | | | | Boiler efficiency (25 to 150%) | 80% | | |
| | | | | | | | Booster heater 1 capacity (0 to 30 kW) | 2 kW | | |
| | | | | | | | Booster heater 2 capacity (0 to 30 kW) | 4 kW | | |
| | | | Smart grid ready | DHW | On/Off | | | Off | | |
| | | | | | Target temp (+1 to +20°C) / -- (Non active) | | | -- | | |
| | | | | Heating | On/Off | | | Off | | |
| | | | | | Target temp. | Switch-on recommendation(20 to 60°C) | | 50°C | | |
| | | | | | | Switch-on command(20 to 60°C) | | 55°C | | |
| | | | | Cooling | On/Off | | | Off | | |
| | | | | | Target temp. | Switch-on recommendation(5 to 25°C) | | 15°C | | |
| | | | | | | Switch-on command(5 to 25°C) | | 10°C | | |
| | | | | Pump cycles | Heating (On/Off) | | | On | | |
| | | | | | Cooling (On/Off) | | | On | | |
| | | | | | Interval(10 to 120 min) | | | 10 min | | |
| | | | Floor dry up function | | On/Off *9 | | | Off | | |
| | | | | | Target temp. | Start&Finish (20 to 60°C) | | 30°C | | |
| | | | | | | Max. temp. (20 to 60°C) | | 45°C | | |
| | | | | | | Max. temp. period (1 to 20 days) | | 5 days | | |
| | | | | | Flow temp. (Increase) | Temp. increase step (+1 to +10°C) | | +5°C | | |
| | | | | | | Increase interval (1 to 7 days) | | 2 days | | |
| | | | | | Flow temp. (Decrease) | Temp. decrease step (−1 to −10°C) | | −5°C | | |
| | | | | | | Decrease interval (1 to 7 days) | | 2 days | | |
| | | | Summer mode | | On/Off | | | Off | | |
| | | | | | Outdoor ambient temp. | Heating ON (4 to 19°C) | | 10°C | | |
| | | | | | | Heating OFF (5 to 20°C) | | 15°C | | |
| | | | | | Judgement time | Heating ON (1 to 48 hours) | | 6 hours | | |
| | | | | | | Heating OFF (1 to 48 hours) | | 6 hours | | |
| | | | | | Forced heating ON (-30 to 10°C) | | | 5 °C | | |
| | | | Water flow control | | On/Off | | | Off | | |

## ■ Engineers Forms

**Commissioning/Field settings record sheet (continued from the previous page)**

| Main remote controller screen | | | | | Parameters | Default setting | Field setting | Notes |
|---|---|---|---|---|---|---|---|---|
| | Service menu | Energy monitor settings | Electric heater capacity | Booster heater 1 capacity | 0 to 30kW | 2kW | | |
| | | | | Booster heater 2 capacity | 0 to 30kW | 4kW | | |
| | | | | Immersion heater capacity | 0 to 30kW | 0kW | | |
| | | | | Analog output | 0 to 30kW | 0kW | | |
| | | | Delivered energy adjustment | | −50 to +50% | 0% | | |
| | | | Water pump input | Pump 1 | 0 to 200W or ***(factory fitted pump) | *** | | |
| | | | | Pump 2 | 0 to 200W | 0W | | |
| | | | | Pump 3 | 0 to 200W | 0W | | |
| | | | | Pump 4 | 0 to 200W | 72W | | |
| | | | Electric energy meter *12 | | 0.1/1/10/100/1000 pulse/kWh | 1000 pulse/kWh | | |
| | | | Heat meter *12 | | 0.1/1/10/100/1000 pulse/kWh | 1000 pulse/kWh | | |
| | | External input settings | Demand control (IN4) | | Heat source OFF/Boiler operation | Boiler operation | | |
| | | | Outdoor thermostat (IN5) | | Heater operation/Boiler operation | Boiler operation | | |
| | | Thermo ON output | | | Zone1/Zone2/Zone1&2 | Zone1&2 | | |

*1 The settings related to Zone2 can be switched only when 2-zone temperature control or 2-Zone valve ON/OFF control is active.
*2 The settings related to Zone2 can be switched only when 2 zone temperature control is enabled (when DIP SW2-6 and SW 2-7 are ON).
*3 Cooling mode settings are available for ER model only.
*4 When the cylinder unit is connected with a PUMY-P outdoor unit, the mode is fixed to "Normal".
*5 For the model without both booster and immersion heater, it may not reach the set temperature depending on the outside ambient temperature.
*6 The lower limit is -15°C depending on the connected outdoor unit.
*7 The lower limit is -13°C depending on the connected outdoor unit.
*8 The lower limit is -14°C depending on the connected outdoor unit.
*9 On: the function is active; Off: the function is inactive.
*10 Do not change the setting since it is set according to the specification of flow sensor attached to the cylinder unit.
*11 When DIP SW1-1 is set to OFF “WITHOUT Boiler” or SW2-6 is set to OFF “WITHOUT Mixing tank”, neither Boiler nor Hybrid can be selected.
*12 The default setting is 1 pulse/kWh depending on the connected indoor unit.
*13 Valid only when operating in Heating room temperature.
*14 When DIP SW5-2 is set to OFF, the function is active.
*15 If asterisk (**) is chosen freeze stat function is deactivated. (i.e. primary water freeze risk)
*16 When the cylinder unit is connected with a PUMY-P outdoor unit, the mode is fixed to "Ambient".
*17 “*” of “*/kWh” represents currency unit (e.g. € or £ or the like)

## ■ Refrigerant collecting (pumpdown) for split model systems only

Refer to “Refrigerant collection” in the outdoor unit installation manual or service manual.

## ■ Back-up operation of boiler

Heating operation is backed up by boiler.
For more details, refer to the installation manual of PAC-TH012HT-E.

**<Installation & System set up>**
1. Set DIP-SW 1-1 to ON "With boiler" and SW2-6 to ON “With Mixing tank”.
2. Install the thermistors THWB1 (Flow temp.) *1 on the boiler circuit.
3. Connect the output wire (OUT10: Boiler operation) to the signal input (room thermostat input) on the boiler. *2
4. Install one of the following room temp. thermostats. *3

- Wireless remote controller (option)
- Room temp. thermostat (local supply)
- Main remote controller (remote position)

*1 The boiler temperature thermistor is an optional part.
*2 OUT10 has no voltage across it.
*3 Boiler heating is controlled on/off by the room temp. thermostat.

**<Main remote controller settings>**
1. Go to Service menu > Heat source setting and choose “Boiler” or “Hybrid”. *4
2. Go to Service menu > Operation settings > Boiler settings to make detailed settings for “Hybrid” above .

*4 The “Hybrid” automatically switches heat sources between Heat pump (and Electric heater) and boiler.

## ■ Product fiche of temperature control

(a) Supplier’s name: MITSUBISHI ELECTRIC CORPORATION
(b) Supplier’s model identifier: PAR-WT50R-E and PAR-WR51R-E
(c) The class of the temperature control: Ⅵ
(d) The contribution of the temperature control to seasonal space heating energy efficiency: 4%

## 5.1. Outlines and dimensions

### ■ Technical Drawings

<Unit: mm>

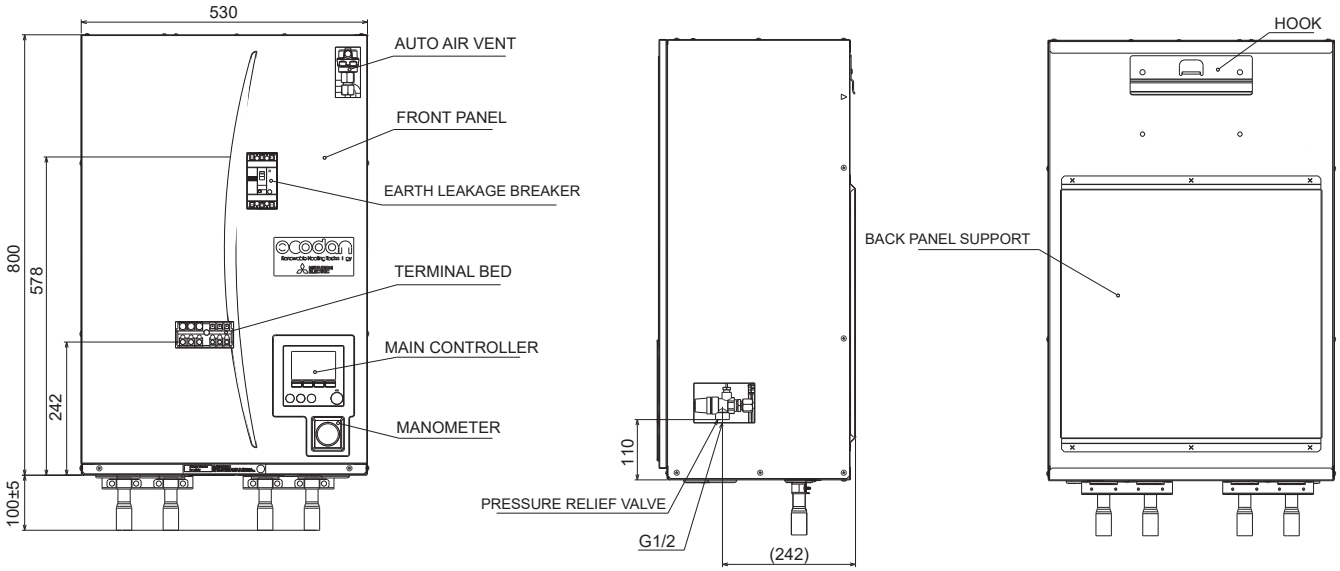


<Front> <Side> <Rear>

### <EHPX> (Packaged model system for heating)

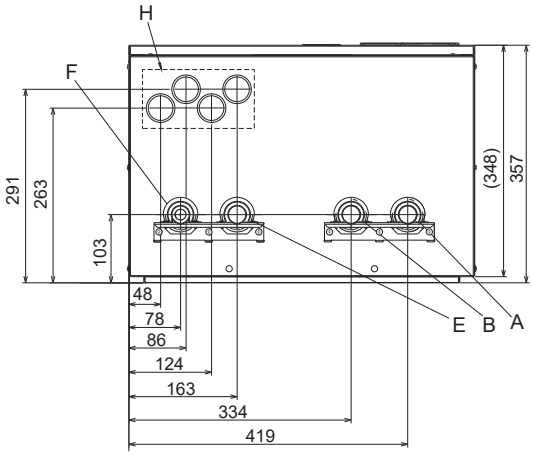


<View from below>

### <ERPX> (Packaged model system for heating and cooling)

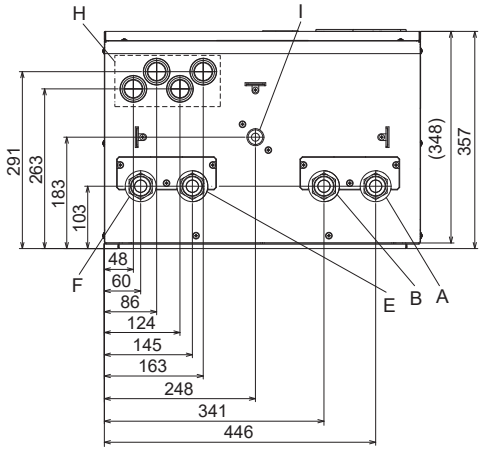


<View from below>

| Letter | Pipe description | Connection size/type | |
|---|---|---|---|
| A | Space heating/Indirect DHW tank (primary) RETURN connection | 28mm/Compression (EHSD/EHSC/EHPX-*)<br>G1 nut (ERSD/ERSC/ERPX-*)<br>G1-1/2 nut (E*SE-*) | |
| B | Space heating/Indirect DHW tank (primary) FLOW connection | 28mm/Compression (EHSD/EHSC/EHPX-*)<br>G1 nut (ERSD/ERSC/ERPX-*)<br>G1-1/2 nut (E*SE-*) | |
| C | Refrigerant (Liquid) | 6.35 mm/Flare (E*SD-*)<br>9.52 mm/Flare (E*SC-*)<br>9.52 mm/Flare (E*SE-*) | ⚠ **Warning**<br>• Refrigerant pipes connection shall be accessible for maintenance purposes.<br>• In the case of reconnecting the refrigerant pipes after detaching, make the flared part of pipe re-fabricated. |
| D | Refrigerant (Gas) | 12.7 mm/Flare (E*SD-*)<br>15.88 mm/Flare (E*SC-*)<br>Brazing connection I.D. ø25.4 (E*SE-*) | |
| E | Flow connection FROM heat pump | 28 mm/Compression (EHPX-*)<br>G1 nut (ERPX-*) | |
| F | Return connection TO heat pump | 28 mm/Compression (EHPX-*)<br>G1 nut (ERPX-*) | |
| G | Discharge pipe (by installer) from pressure relief valve | G1/2” female (valve port within hydrobox casing) | |
| H | Electrical cable inlets<br>① ② ③ ④ | For inlets ① and ②, run high-voltage wires including power cable, indoor-outdoor cable, and external output wires.<br>For inlets ③ and ④, run low-voltage wires including external input wires and thermistor wires.<br>For a wireless receiver (option) cable, use inlet ④. | |
| I | Drain socket | O.D. ø20 | |

<Table 5.1>

<Unit: mm>

## <EHS*> (Split model system for heating)

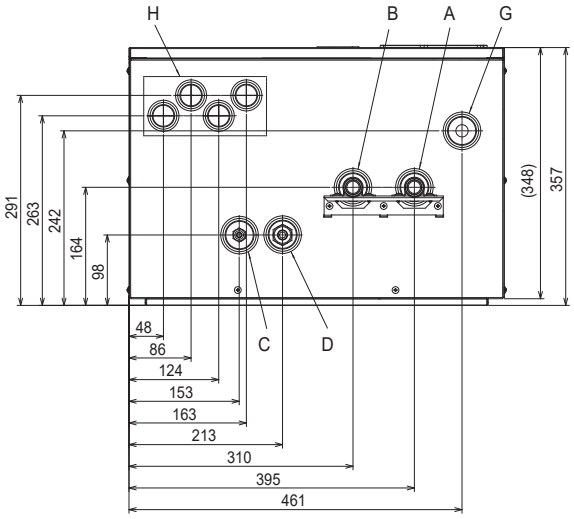


<View from below>

## <ERS*> (Split model system for heating and cooling)

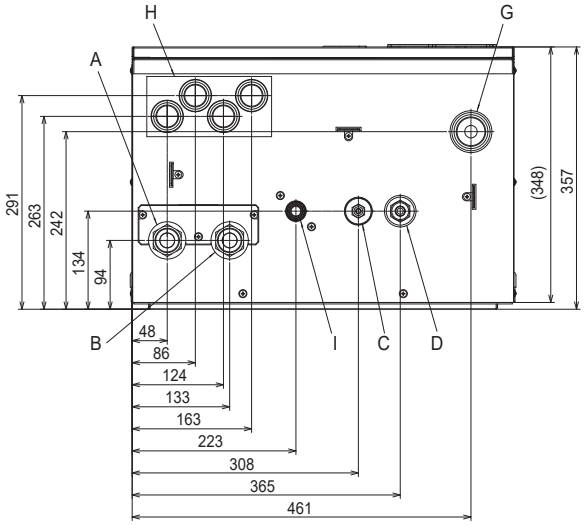


<View from below>

## <E*SE> (Split model system for heating/ heating and cooling)

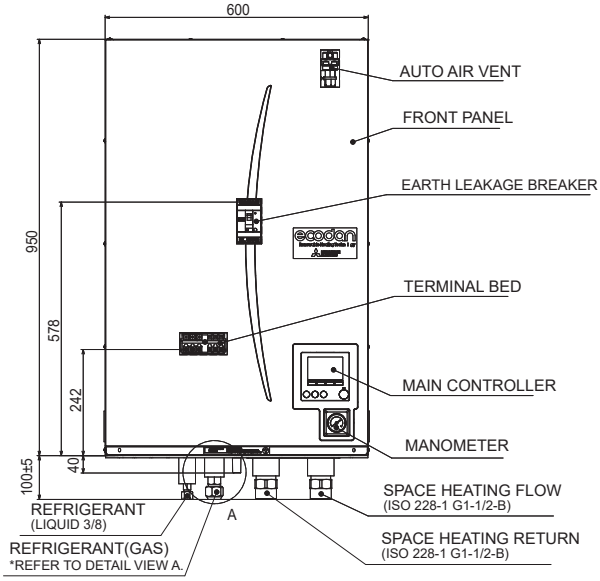


<Front>

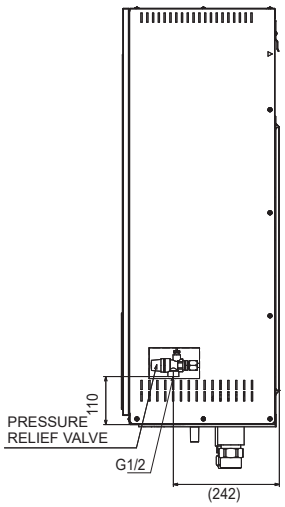


<Side>

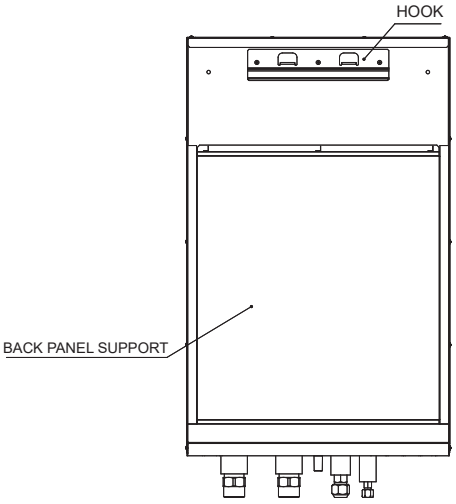


<Rear>

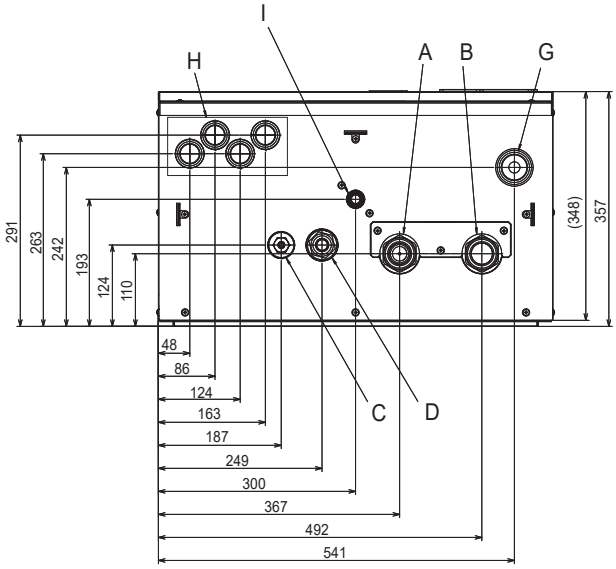


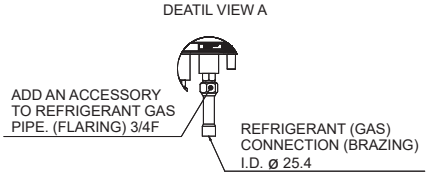

## System configuration

| | Packaged model system | Split model system |
|---|---|---|
| Model name | EHPT20X- | EHST20*-, ERST20*- |
| Model name | EHPX- | EHS*-, ERS*- |
| Hydrobox | 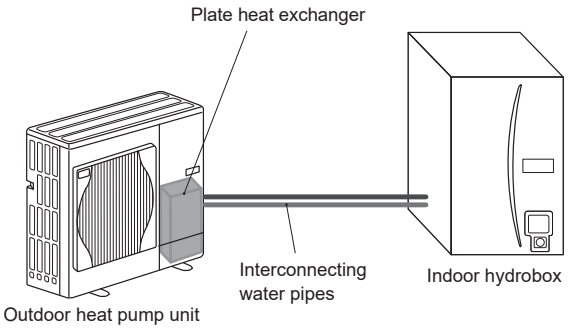 | 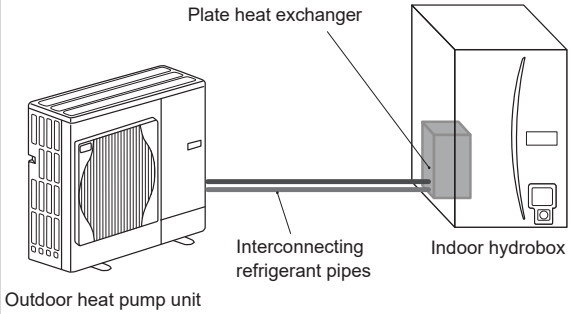 |

## Service access diagrams

| Service access | |
|---|---|
| Parameter | Dimension (mm) |
| a | 200 |
| b | 150 |
| c | 500 |
| d | 500 |

Sufficient space MUST be left for the provision of discharge pipework as detailed in National and Local building regulations.

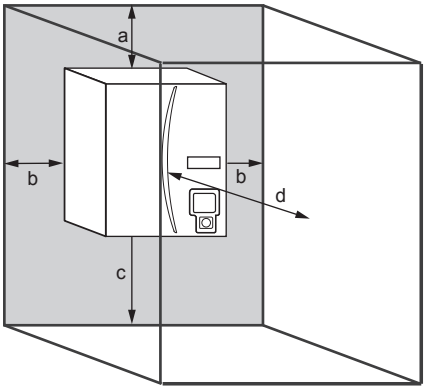


<Figure 5.1.1>
Service access

The hydrobox must be located indoors and in a frost-free environment, for example in a utility room.

## ■ Indoor unit installation requirements for R32 refrigerant

- If the total refrigerant charge in the system is < 1.84 kg, no additional minimum floor area is required.
- If the total refrigerant charge in the system is ≥ 1.84 kg, minimum floor area requirements are complied according to the below flow chart.
- Charges above 2.4 kg are not allowed in the unit.

Flow chart for indoor unit installation

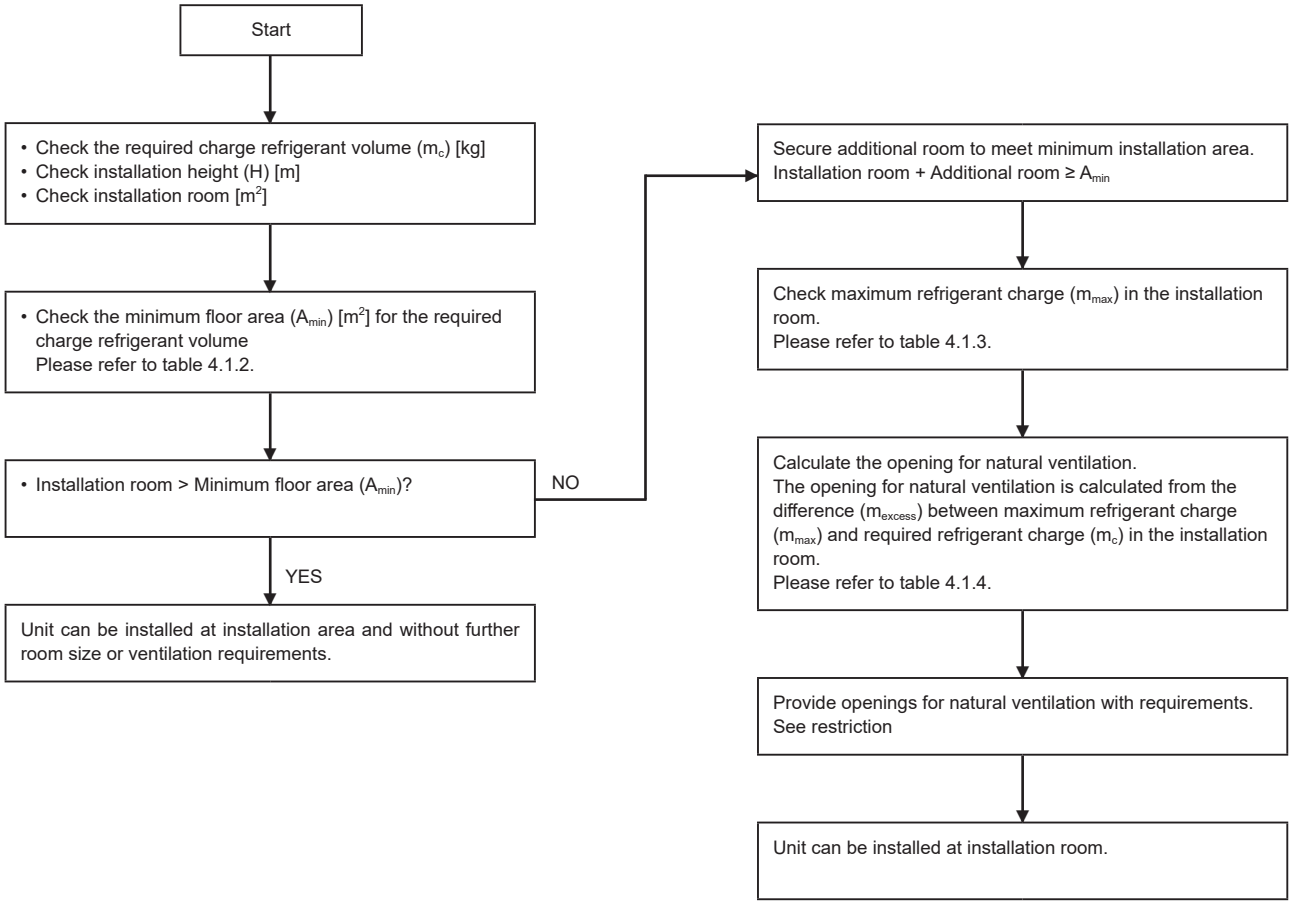


Hydrobox:

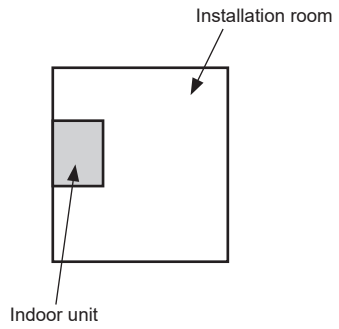


Hydrobox:
In case of natural ventilation

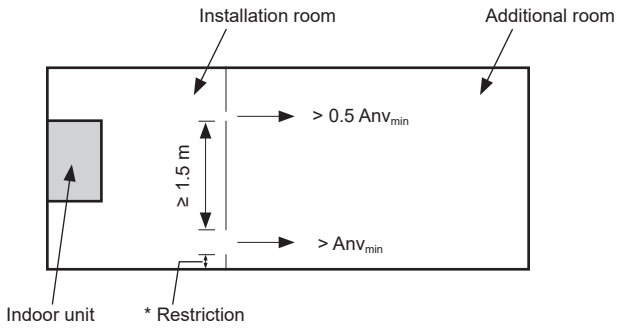


* Restriction for ventilation
When the openings for connected rooms and natural ventilation are required, the following conditions shall be applied.

- The area of any openings above 300 mm from the floor shall not be considered in determining compliance with minimum opening for natural ventilation ($Anv_{min}$).
- At least 50% of the required opening area $Anv_{min}$ shall be below 200 mm from the floor.
- The bottom of the lowest openings shall not be higher than the point of release when the unit is installed and not more than 100 mm from the floor.
- Openings are permanent openings which cannot be closed.
- The height of the openings between the wall and floor which connect the rooms are not less than 20 mm.
- A second higher opening shall be provided. The total size of second opening shall not be less than 50% of minimum opening area for $Anv_{min}$ and shall be at least 1.5 m above the floor.

## ■ Indoor unit installation requirements for R32 refrigerant

Minimum floor area: indoor unit-Hydrobox

| $m_c$ [kg] | Minimum floor area ($A_{min}$) [$m^2$] | | | | | | | | |
|---|---|---|---|---|---|---|---|---|---|
| | H = 1000 mm | H = 1050 mm | H = 1100 mm | H = 1150 mm | H = 1200 mm | H = 1250 mm | H = 1300 mm | H = 1350 mm | H = 1400 mm |
| < 1.84 | - | - | - | - | - | - | - | - | - |
| 1.84 | 10.4 | 9.5 | 8.6 | 7.9 | 7.3 | 6.7 | 6.2 | 6.0 | 5.8 |
| 1.9 | 11.1 | 10.1 | 9.2 | 8.4 | 7.7 | 7.1 | 6.6 | 6.2 | 5.9 |
| 2.0 | 12.3 | 11.2 | 10.2 | 9.3 | 8.5 | 7.9 | 7.3 | 6.8 | 6.3 |
| 2.1 | 13.6 | 12.3 | 11.2 | 10.3 | 9.4 | 8.7 | 8.0 | 7.5 | 6.9 |
| 2.2 | 14.9 | 13.5 | 12.3 | 11.3 | 10.3 | 9.5 | 8.8 | 8.2 | 7.6 |
| 2.3 | 16.3 | 14.8 | 13.4 | 12.3 | 11.3 | 10.4 | 9.6 | 8.9 | 8.3 |
| 2.4 | 17.7 | 16.0 | 14.6 | 13.4 | 12.3 | 11.3 | 10.5 | 9.7 | 9.0 |

<Table 4.1.2>

- **H = Height measured from the bottom of the casing to the floor.**
- **If the total refrigerant charge in the system is < 1.84 kg, no additional minimum floor area is required.**
- **Charges above 2.4 kg are not allowed in the unit.**
- **For intermediate refrigerant charges, use the row with the higher value.**
  **Example: If the refrigerant charge is 2.04 kg, use the row of 2.1 kg.**
- **The value of installation height (H) is considered above value to comply to IEC60335-2-40: 2018**

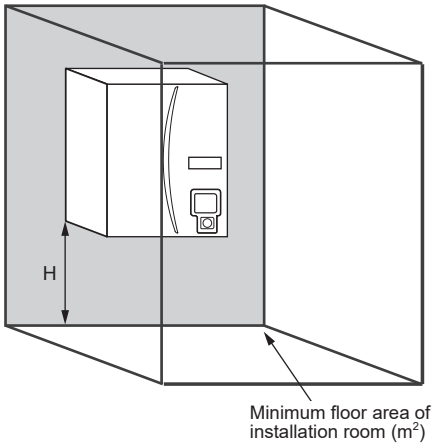


Maximum refrigerant charge allowed in the room: Hydrobox

| Installation room [$m^2$] | Maximum refrigerant charge in a room ($m_{max}$) [kg] | | | | | | | | |
|---|---|---|---|---|---|---|---|---|---|
| | H = 1000 mm | H = 1050 mm | H = 1100 mm | H = 1150 mm | H = 1200 mm | H = 1250 mm | H = 1300 mm | H = 1350 mm | H = 1400 mm |
| 1 | 1.83 | 1.83 | 1.83 | 1.83 | 1.83 | 1.83 | 1.83 | 1.83 | 1.83 |
| 2 | 1.83 | 1.83 | 1.83 | 1.83 | 1.83 | 1.83 | 1.83 | 1.83 | 1.83 |
| 3 | 1.83 | 1.83 | 1.83 | 1.83 | 1.83 | 1.83 | 1.83 | 1.83 | 1.83 |
| 4 | 1.83 | 1.83 | 1.83 | 1.83 | 1.83 | 1.83 | 1.83 | 1.83 | 1.83 |
| 5 | 1.83 | 1.83 | 1.83 | 1.83 | 1.83 | 1.83 | 1.83 | 1.83 | 1.83 |
| 6 | 1.83 | 1.83 | 1.83 | 1.83 | 1.83 | 1.83 | 1.83 | 1.86 | 1.93 |
| 7 | 1.83 | 1.83 | 1.83 | 1.83 | 1.83 | 1.88 | 1.96 | 2.04 | 2.11 |
| 8 | 1.83 | 1.83 | 1.83 | 1.85 | 1.93 | 2.01 | 2.1 | 2.18 | 2.26 |
| 9 | 1.83 | 1.83 | 1.88 | 1.97 | 2.05 | 2.14 | 2.22 | 2.31 | 2.39 |
| 10 | 1.83 | 1.89 | 1.98 | 2.07 | 2.16 | 2.25 | 2.34 | 2.4 | 2.4 |
| 11 | 1.89 | 1.98 | 2.08 | 2.17 | 2.27 | 2.36 | 2.4 | 2.4 | 2.4 |
| 12 | 1.97 | 2.07 | 2.17 | 2.27 | 2.37 | 2.4 | 2.4 | 2.4 | 2.4 |
| 13 | 2.05 | 2.16 | 2.26 | 2.36 | 2.4 | 2.4 | 2.4 | 2.4 | 2.4 |
| 14 | 2.13 | 2.24 | 2.35 | 2.4 | 2.4 | 2.4 | 2.4 | 2.4 | 2.4 |
| 15 | 2.21 | 2.32 | 2.4 | 2.4 | 2.4 | 2.4 | 2.4 | 2.4 | 2.4 |
| 16 | 2.28 | 2.39 | 2.4 | 2.4 | 2.4 | 2.4 | 2.4 | 2.4 | 2.4 |
| 17 | 2.35 | 2.4 | 2.4 | 2.4 | 2.4 | 2.4 | 2.4 | 2.4 | 2.4 |
| 18 | 2.4 | 2.4 | 2.4 | 2.4 | 2.4 | 2.4 | 2.4 | 2.4 | 2.4 |

<Table 4.1.3>

- **For intermediate floor areas, use the row with the lower value. Example: If the floor area is 5.4 $m^2$, use the row of 5 $m^2$.**
- **The value of installation height (H) is considered above value to comply to IEC60335-2-40: 2018**

Minimum venting opening area for natural ventilation: Hydrobox

| $m_c$ [kg] | $m_{max}$ [kg] | $m_{excess}$ [kg] = $m_c$ - $m_{max}$ | Minimum opening for natural ventilation ($Anv_{min}$) [$cm^2$] | | | | | | | | |
|---|---|---|---|---|---|---|---|---|---|---|---|
| | | | H = 1000 mm | H = 1050 mm | H = 1100 mm | H = 1150 mm | H = 1200 mm | H = 1250 mm | H = 1300 mm | H = 1350 mm | H = 1400 mm |
| 2.4 | 1.84 | 0.56 | 200 | 191 | 182 | 174 | 167 | 160 | 154 | 152 | 149 |
| 2.4 | 1.9 | 0.5 | 182 | 173 | 165 | 158 | 152 | 146 | 140 | 135 | 133 |
| 2.4 | 2.0 | 0.4 | 149 | 142 | 136 | 130 | 125 | 120 | 115 | 111 | 107 |
| 2.4 | 2.1 | 0.3 | 115 | 109 | 105 | 100 | 96 | 92 | 89 | 85 | 82 |
| 2.4 | 2.2 | 0.2 | 79 | 75 | 71 | 68 | 66 | 63 | 61 | 58 | 56 |
| 2.4 | 2.3 | 0.1 | 40 | 39 | 37 | 35 | 34 | 32 | 31 | 30 | 29 |

<Table 4.1.4>

- **For intermediate $m_{excess}$ values, the value that corresponds to the higher $m_{excess}$ value from the table is considered.**
  **Example:**
  **$m_{excess}$ = 0.44 kg, the value that corresponds to $m_{excess}$ = 0.5 kg is considered.**
- **The value of installation height (H) is considered above value to comply to IEC60335-2-40: 2018**

## ■ Repositioning hydrobox

If you need to move the hydrobox to a new position FULLY DRAIN it before moving to avoid damage to the unit.
**Note: Do NOT hold piping when moving or lifting the hydrobox.**

## 5.2. Wiring diagrams

### ■ EHSD-MED, ERSD-MED, EHSC-MED, ERSC-MED, EHSE-MED, ERSE-MED, EHPX-MED

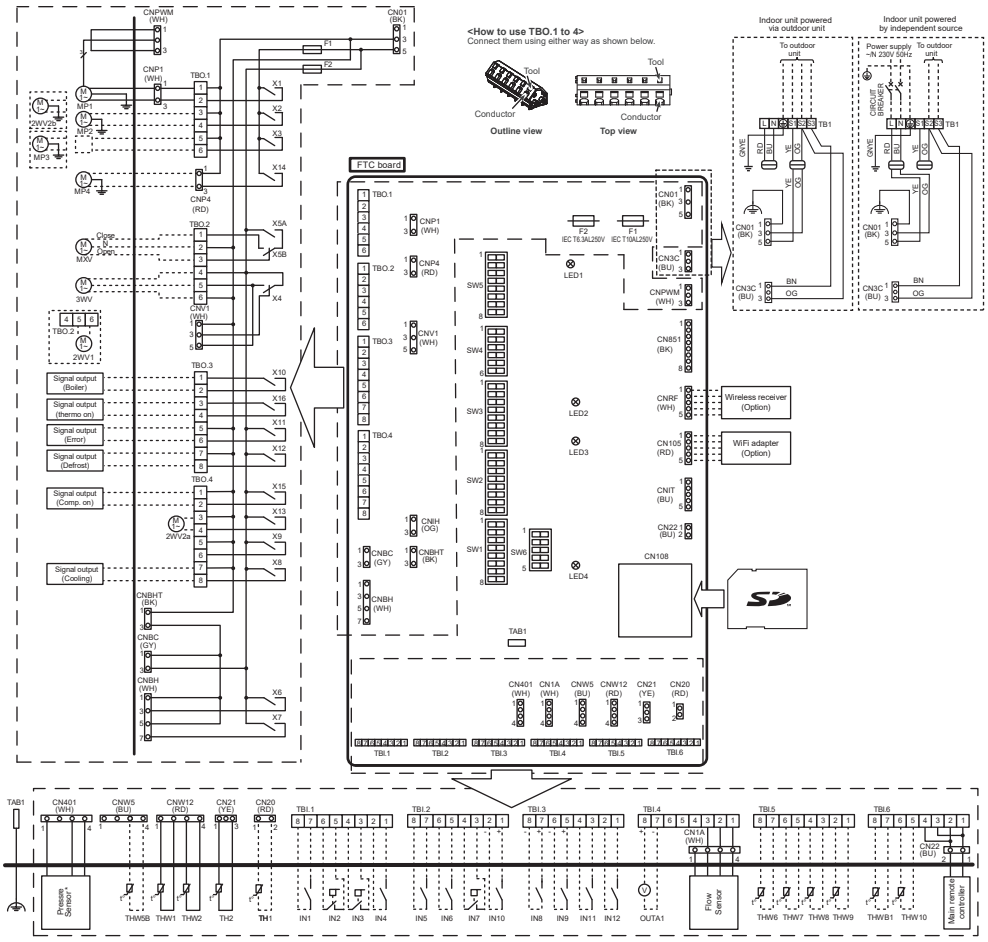


**Table 1 Signal Inputs**

| Name | Terminal block | Connector | Item | OFF (Open) | ON (Short) |
|---|---|---|---|---|---|
| IN1 | TBI.1 7-8 | — | Room thermostat 1 input *1 | Refer to SW2-1 in <Table 5.3.1 DIP Switch Functions>. | |
| IN2 | TBI.1 5-6 | — | Flow switch 1 input | Refer to SW2-2 in <Table 5.3.1 DIP Switch Functions>. | |
| IN3 | TBI.1 3-4 | — | Flow switch 2 input (Zone1) | Refer to SW3-2 in <Table 5.3.1 DIP Switch Functions>. | |
| IN4 | TBI.1 1-2 | — | Demand control input | Normal | Heat source OFF/ Boiler operation *3 |
| IN5 | TBI.2 7-8 | — | Outdoor thermostat input *2 | Standard operation | Heater operation/ Boiler operation *3 |
| IN6 | TBI.2 5-6 | — | Room thermostat 2 input *1 | Refer to SW3-1 in <Table 5.3.1 DIP Switch Functions>. | |
| IN7 | TBI.2 3-4 | — | Flow switch 3 input (Zone2) | Refer to SW3-2 in <Table 5.3.1 DIP Switch Functions>. | |
| IN8 | TBI.3 7-8 | — | Electric energy meter 1 | Refer to installation manual. | |
| IN9 | TBI.3 5-6 | — | Electric energy meter 2 | | |
| IN10 | TBI.2 1-2 | — | Heat meter | | |
| IN11 | TBI.3 3-4 | — | Smart grid ready input | | |
| IN12 | TBI.3 1-2 | — | | | |
| INA1 | TBI.4 1-3 | CN1A | Flow sensor | | |

*1. Set the ON/OFF cycle time of the room thermostat for 10 minutes or more; otherwise the compressor may be damaged.
*2. If using outdoor thermostat for controlling operation of heaters, the lifetime of the heaters and related parts may be reduced.
*3. To turn on the boiler operation, use the main remote controller to select "Boiler" in "External input setting" screen in the service menu.

**Table 2 Outputs**

| Name | Terminal block | Connector | Item | OFF | ON |
|---|---|---|---|---|---|
| OUT1 | TBO.1 1-2 | CNP1 | Water circulation pump 1 output (Space heating/cooling & DHW) | OFF | ON |
| OUT2 | TBO.1 3-4 | — | Water circulation pump 2 output (Space heating/cooling for Zone1) | OFF | ON |
| OUT3 | TBO.1 5-6 | — | Water circulation pump 3 output (Space heating/cooling for Zone2) *1<br>2-way valve 2b output *2 | OFF | ON |
| OUT4 | TBO.2 4-6 | CNV1 | 3-way valve (2-way valve) output | Heating | DHW |
| | — | CN851 | 3-way valve output | | |
| OUT5 | TBO.2 1-2 | — | Mixing valve output *1 | Stop | Close |
| | TBO.2 2-3 | | | | Open |
| OUT6 | — | CNBH 1-3 | Booster heater 1 output | OFF | ON |
| OUT7 | — | CNBH 5-7 | Booster heater 2 output | OFF | ON |
| OUT8 | TBO.4 7-8 | — | Cooling signal output | OFF | ON |
| OUT9 | TBO.4 5-6 | CNIH | Immersion heater output | OFF | ON |
| OUT10 | TBO.3 1-2 | — | Boiler output | OFF | ON |
| OUT11 | TBO.3 5-6 | — | Error output | Normal | Error |
| OUT12 | TBO.3 7-8 | — | Defrost output | Normal | Defrost |
| OUT13 | TBO.4 3-4 | — | 2-way valve 2a output *2 | OFF | ON |
| OUT14 | — | CNP4 | Water circulation pump 4 output (DHW) | OFF | ON |
| OUT15 | TBO.4 1-2 | — | Comp. ON signal | OFF | ON |
| OUT16 | TBO.3 3-4 | — | Thermo ON signal | OFF | ON |
| OUTA1 | TBI.4 7-8 | — | Analog output | 0V-10V | |

Do not connect to the terminals that are indicated as "—" in the "Terminal block" field.
*1. For 2-zone temperature control.
*2. For 2-zone valve ON/OFF control.

| Symbol | Name |
|---|---|
| TB1 | Terminal block <Power supply, Outdoor unit> |
| ECB1 | Earth leakage circuit breaker for booster heater |
| MP1 | Water circulation pump 1(Space heating and DHW) |
| MP2 | Water circulation pump 2 (Space heating for Zone1)(Local supply) |
| MP3 | Water circulation pump 3 (Space heating for Zone2)(Local supply) |
| MP4 | Water circulation pump 4 (DHW)(Local supply) |
| 3WV(2WV1) | 3-way valve (2-way valve 1)(Local supply) |
| 2WV2a | 2-way valve (For Zone 1)(Local supply) |
| 2WV2b | 2-way valve (For Zone 2)(Local supply) |
| MXV | Mixing valve (Local supply) |
| BHT | Thermostat for booster heater |
| BHF | Thermal fuse for booster heater |
| BH1 | Booster heater 1 |
| BH2 | Booster heater 2 |
| BHC1 | Contactor for booster heater 1 |
| BHC2 | Contactor for booster heater 2 |
| BHCP | Contactor for booster heater protection |
| TH1 | Thermistor (Room temp.)(Option) |
| TH2 | Thermistor (Ref. liquid temp.) |
| THW1 | Thermistor (Flow water temp.) |
| THW2 | Thermistor (Return water temp.) |
| THW5B | Thermistor (DHW tank water temp.)(Option) |
| THW6 | Thermistor (Zone1 flow temp.)(Option) |
| THW7 | Thermistor (Zone1 return temp.)(Option) |
| THW8 | Thermistor (Zone2 flow temp.)(Option) |
| THW9 | Thermistor (Zone2 return temp.)(Option) |
| THW10 | Thermistor (Mixing tank temp.)(Option) |
| THWB1 | Thermistor (Boiler flow temp.)(Option) |
| IN1 | Room thermostat 1 (Local supply) |
| IN2 | Flow switch 1 (Local supply) |
| IN3 | Flow switch 2 (Local supply) |
| IN4 | Demand control (Local supply) |
| IN5 | Outdoor thermostat (Local supply) |
| IN6 | Room thermostat 2 (Local supply) |
| IN7 | Flow switch 3 (Local supply) |
| IN8 | Electric energy meter 1 (Local supply) |
| IN9 | Electric energy meter 2 (Local supply) |
| IN10 | Heat meter (Local supply) |
| IN11 | Smart grid ready input (Local supply) |
| IN12 | |
| INA1 | Flow sensor |
| FLOW TEMP. CONTROLLER (FTC) | |
| TBO.1~4 | Terminal block <Outputs> |
| TBI.1~6 | Terminal block <Signal Inputs, Thermistor> |
| F1 | Fuse (IEC T10AL250V) |
| F2 | Fuse (IEC T6.3AL250V) |
| SW1~6 | DIP switch *See Table 6.6.1 |
| X1~16 | Relay |
| LED1 | Power supply (FTC) |
| LED2 | Power supply (Main remote controller) |
| LED3 | Communication (FTC-Outdoor unit) |
| LED4 | Reading or writing data to SD card |
| CNPWM | Pump speed control signal for MP1 |
| CN108 | SD card connector |

## ■ EHSD-VM2D, ERSD-VM2D, EHSC-VM2D, ERSC-VM2D, EHPX-VM2D

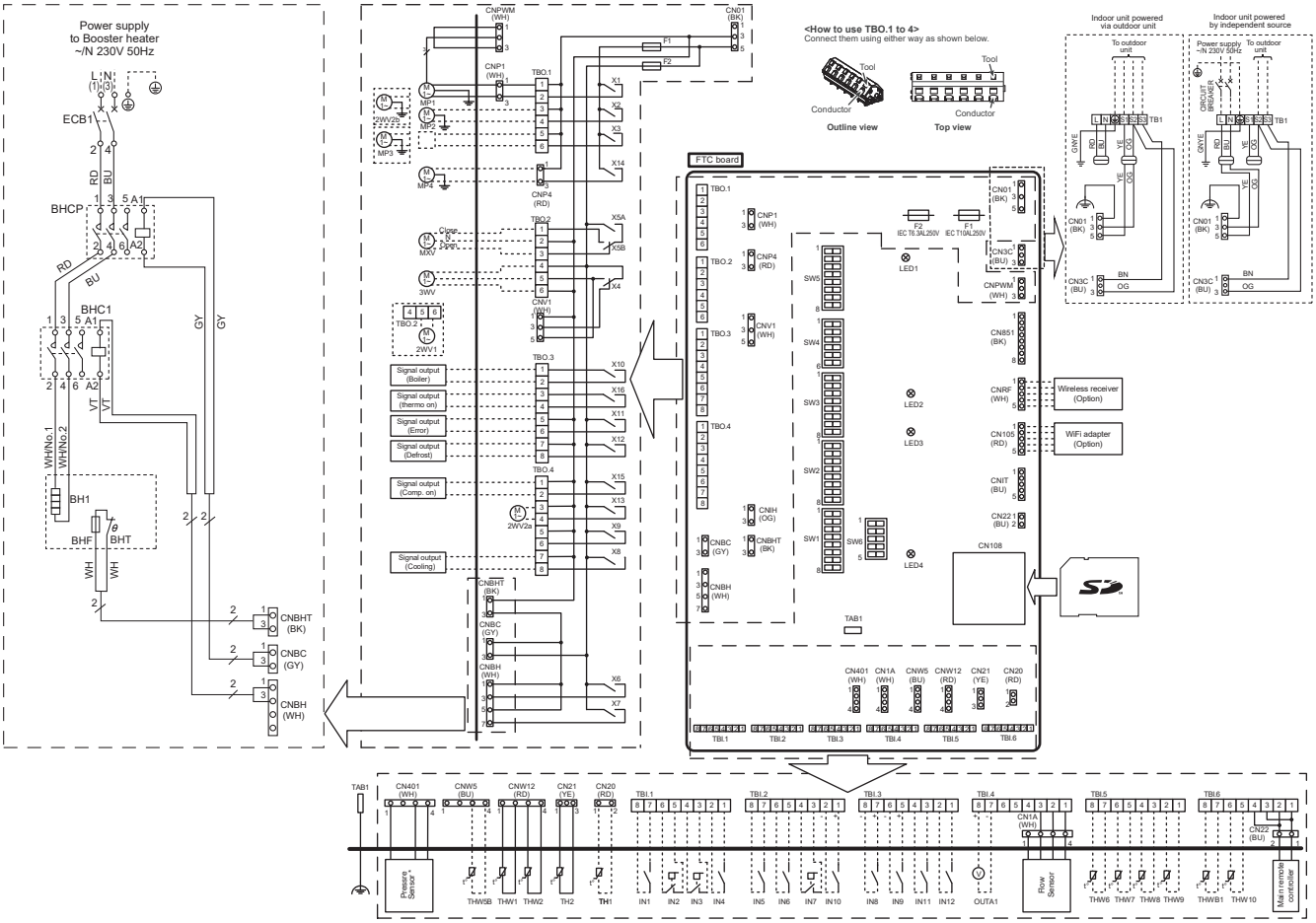


**Table 1 Signal Inputs**

| Name | Terminal block | Connector | Item | OFF (Open) | ON (Short) |
|---|---|---|---|---|---|
| IN1 | TBI.1 7-8 | — | Room thermostat 1 input *1 | Refer to SW2-1 in <Table 5.3.1 DIP Switch Functions>. | |
| IN2 | TBI.1 5-6 | — | Flow switch 1 input | Refer to SW2-2 in <Table 5.3.1 DIP Switch Functions>. | |
| IN3 | TBI.1 3-4 | — | Flow switch 2 input (Zone1) | Refer to SW3-2 in <Table 5.3.1 DIP Switch Functions>. | |
| IN4 | TBI.1 1-2 | — | Demand control input | Normal | Heat source OFF/ Boiler operation *3 |
| IN5 | TBI.2 7-8 | — | Outdoor thermostat input *2 | Standard operation | Heater operation/ Boiler operation *3 |
| IN6 | TBI.2 5-6 | — | Room thermostat 2 input *1 | Refer to SW3-1 in <Table 5.3.1 DIP Switch Functions>. | |
| IN7 | TBI.2 3-4 | — | Flow switch 3 input (Zone2) | Refer to SW3-2 in <Table 5.3.1 DIP Switch Functions>. | |
| IN8 | TBI.3 7-8 | — | Electric energy meter 1 | Refer to installation manual. | |
| IN9 | TBI.3 5-6 | — | Electric energy meter 2 | | |
| IN10 | TBI.2 1-2 | — | Heat meter | | |
| IN11 | TBI.3 3-4 | — | Smart grid ready input | | |
| IN12 | TBI.3 1-2 | — | | | |
| INA1 | TBI.4 1-3 | CN1A | Flow sensor | | |

*1. Set the ON/OFF cycle time of the room thermostat for 10 minutes or more; otherwise the compressor may be damaged.
*2. If using outdoor thermostat for controlling operation of heaters, the lifetime of the heaters and related parts may be reduced.
*3. To turn on the boiler operation, use the main remote controller to select "Boiler" in "External input setting" screen in the service menu.

**Table 2 Outputs**

| Name | Terminal block | Connector | Item | OFF | ON |
|---|---|---|---|---|---|
| OUT1 | TBO.1 1-2 | CNP1 | Water circulation pump 1 output (Space heating/cooling & DHW) | OFF | ON |
| OUT2 | TBO.1 3-4 | — | Water circulation pump 2 output (Space heating/cooling for Zone1) | OFF | ON |
| OUT3 | TBO.1 5-6 | — | Water circulation pump 3 output (Space heating/cooling for Zone2) *1<br>2-way valve 2b output *2 | OFF | ON |
| OUT4 | TBO.2 4-6 | CNV1 | 3-way valve (2-way valve) output | Heating | DHW |
| | — | CN851 | 3-way valve output | | |
| OUT5 | TBO.2 1-2 | — | Mixing valve output *1 | Stop | Close |
| | TBO.2 2-3 | | | | Open |
| OUT6 | — | CNBH 1-3 | Booster heater 1 output | OFF | ON |
| OUT7 | — | CNBH 5-7 | Booster heater 2 output | OFF | ON |
| OUT8 | TBO.4 7-8 | — | Cooling signal output | OFF | ON |
| OUT9 | TBO.4 5-6 | CNIH | Immersion heater output | OFF | ON |
| OUT10 | TBO.3 1-2 | — | Boiler output | OFF | ON |
| OUT11 | TBO.3 5-6 | — | Error output | Normal | Error |
| OUT12 | TBO.3 7-8 | — | Defrost output | Normal | Defrost |
| OUT13 | TBO.4 3-4 | — | 2-way valve 2a output *2 | OFF | ON |
| OUT14 | — | CNP4 | Water circulation pump 4 output (DHW) | OFF | ON |
| OUT15 | TBO.4 1-2 | — | Comp. ON signal | OFF | ON |
| OUT16 | TBO.3 3-4 | — | Thermo ON signal | OFF | ON |
| OUTA1 | TBI.4 7-8 | — | Analog output | 0V-10V | |

Do not connect to the terminals that are indicated as "—" in the "Terminal block" field.
*1. For 2-zone temperature control.
*2. For 2-zone valve ON/OFF control.

| Symbol | Name |
|---|---|
| TB1 | Terminal block <Power supply, Outdoor unit> |
| ECB1 | Earth leakage circuit breaker for booster heater |
| MP1 | Water circulation pump 1(Space heating and DHW) |
| MP2 | Water circulation pump 2 (Space heating for Zone1)(Local supply) |
| MP3 | Water circulation pump 3 (Space heating for Zone2)(Local supply) |
| MP4 | Water circulation pump 4 (DHW)(Local supply) |
| 3WV(2WV1) | 3-way valve (2-way valve 1)(Local supply) |
| 2WV2a | 2-way valve (For Zone 1)(Local supply) |
| 2WV2b | 2-way valve (For Zone 2)(Local supply) |
| MXV | Mixing valve (Local supply) |
| BHT | Thermostat for booster heater |
| BHF | Thermal fuse for booster heater |
| BH1 | Booster heater 1 |
| BHC1 | Contactor for booster heater 1 |
| BHCP | Contactor for booster heater protection |
| TH1 | Thermistor (Room temp.)(Option) |
| TH2 | Thermistor (Ref. liquid temp.) |
| THW1 | Thermistor (Flow water temp.) |
| THW2 | Thermistor (Return water temp.) |
| THW5B | Thermistor (DHW tank water temp.)(Option) |
| THW6 | Thermistor (Zone1 flow temp.)(Option) |
| THW7 | Thermistor (Zone1 return temp.)(Option) |
| THW8 | Thermistor (Zone2 flow temp.)(Option) |
| THW9 | Thermistor (Zone2 return temp.)(Option) |
| THW10 | Thermistor (Mixing tank temp.)(Option) |
| THWB1 | Thermistor (Boiler flow temp.)(Option) |
| IN1 | Room thermostat 1 (Local supply) |
| IN2 | Flow switch 1 (Local supply) |
| IN3 | Flow switch 2 (Local supply) |
| IN4 | Demand control (Local supply) |
| IN5 | Outdoor thermostat (Local supply) |
| IN6 | Room thermostat 2 (Local supply) |
| IN7 | Flow switch 3 (Local supply) |
| IN8 | Electric energy meter 1 (Local supply) |
| IN9 | Electric energy meter 2 (Local supply) |
| IN10 | Heat meter (Local supply) |
| IN11 | Smart grid ready input (Local supply) |
| IN12 | |
| INA1 | Flow sensor |
| FLOW TEMP. CONTROLLER (FTC) | |
| TBO.1~4 | Terminal block <Outputs> |
| TBI.1~6 | Terminal block <Signal Inputs, Thermistor> |
| F1 | Fuse (IEC T10AL250V) |
| F2 | Fuse (IEC T6.3AL250V) |
| SW1~6 | DIP switch *See Table 6.6.1 |
| X1~16 | Relay |
| LED1 | Power supply (FTC) |
| LED2 | Power supply (Main remote controller) |
| LED3 | Communication (FTC-Outdoor unit) |
| LED4 | Reading or writing data to SD card |
| CNPWM | Pump speed control signal for MP1 |
| CN108 | SD card connector |

## ■ EHSD-VM6D, EHSC-VM6D, EHPX-VM6D

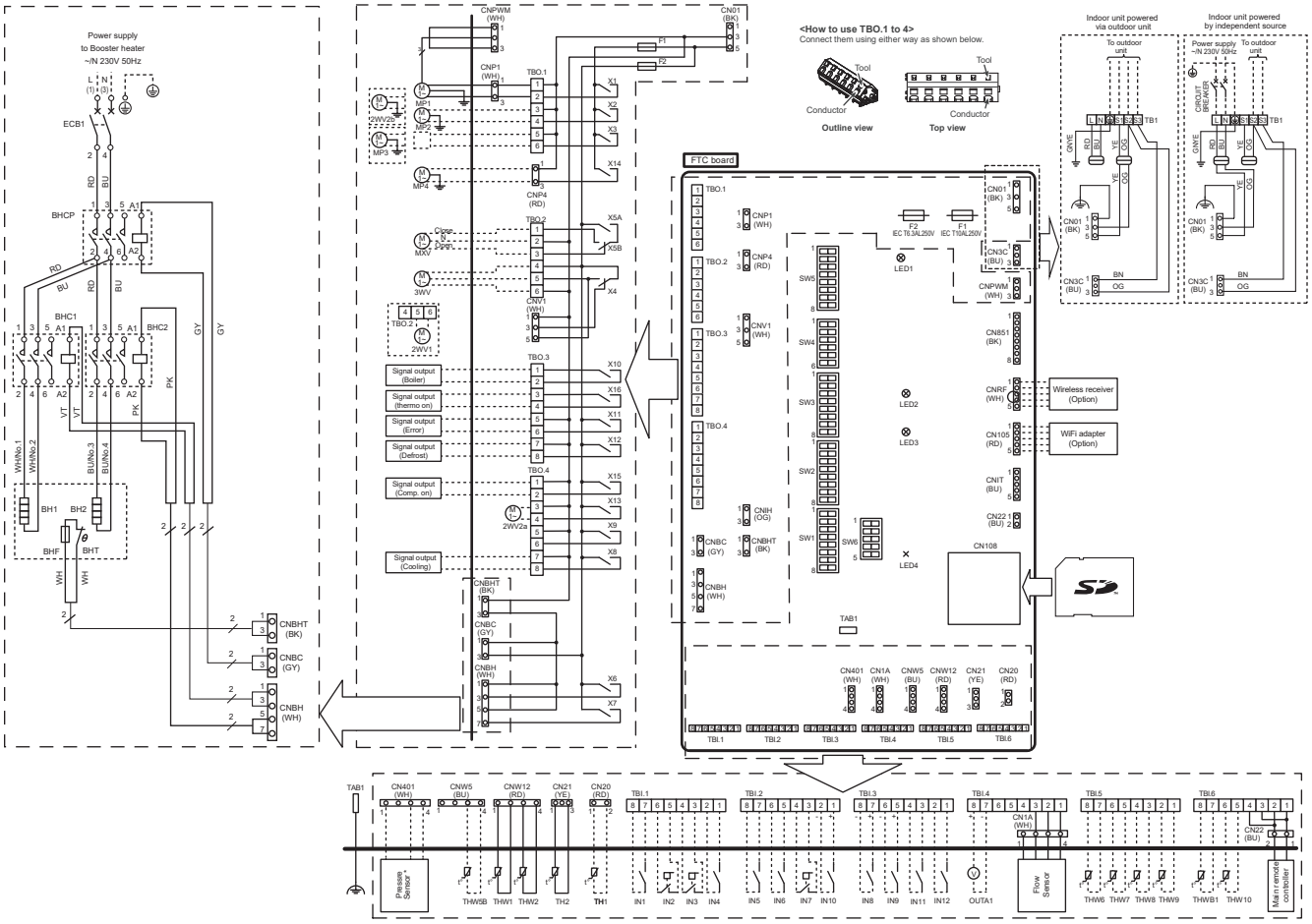


**Table 1 Signal Inputs**

| Name | Terminal block | Connector | Item | OFF (Open) | ON (Short) |
|---|---|---|---|---|---|
| IN1 | TBI.1 7-8 | — | Room thermostat 1 input *1 | Refer to SW2-1 in <Table 5.3.1 DIP Switch Functions>. | |
| IN2 | TBI.1 5-6 | — | Flow switch 1 input | Refer to SW2-2 in <Table 5.3.1 DIP Switch Functions>. | |
| IN3 | TBI.1 3-4 | — | Flow switch 2 input (Zone1) | Refer to SW3-2 in <Table 5.3.1 DIP Switch Functions>. | |
| IN4 | TBI.1 1-2 | — | Demand control input | Normal | Heat source OFF/ Boiler operation *3 |
| IN5 | TBI.2 7-8 | — | Outdoor thermostat input *2 | Standard operation | Heater operation/ Boiler operation *3 |
| IN6 | TBI.2 5-6 | — | Room thermostat 2 input *1 | Refer to SW3-1 in <Table 5.3.1 DIP Switch Functions>. | |
| IN7 | TBI.2 3-4 | — | Flow switch 3 input (Zone2) | Refer to SW3-2 in <Table 5.3.1 DIP Switch Functions>. | |
| IN8 | TBI.3 7-8 | — | Electric energy meter 1 | Refer to installation manual. | |
| IN9 | TBI.3 5-6 | — | Electric energy meter 2 | | |
| IN10 | TBI.2 1-2 | — | Heat meter | | |
| IN11 | TBI.3 3-4 | — | Smart grid ready input | | |
| IN12 | TBI.3 1-2 | — | | | |
| INA1 | TBI.4 1-3 | CN1A | Flow sensor | | |

*1. Set the ON/OFF cycle time of the room thermostat for 10 minutes or more; otherwise the compressor may be damaged.
*2. If using outdoor thermostat for controlling operation of heaters, the lifetime of the heaters and related parts may be reduced.
*3. To turn on the boiler operation, use the main remote controller to select “Boiler” in “External input setting” screen in the service menu.

**Table 2 Outputs**

| Name | Terminal block | Connector | Item | OFF | ON |
|---|---|---|---|---|---|
| OUT1 | TBO.1 1-2 | CNP1 | Water circulation pump 1 output (Space heating/cooling & DHW) | OFF | ON |
| OUT2 | TBO.1 3-4 | — | Water circulation pump 2 output (Space heating/cooling for Zone1) | OFF | ON |
| OUT3 | TBO.1 5-6 | — | Water circulation pump 3 output (Space heating/cooling for Zone2) *1 | OFF | ON |
| OUT4 | TBO.2 4-6 | CNV1 | 2-way valve 2b output *2 | | |
| | — | CN851 | 3-way valve (2-way valve) output | Heating | DHW |
| | | | 3-way valve output | | |
| OUT5 | TBO.2 1-2 | — | Mixing valve output *1 | Stop | Close |
| | TBO.2 2-3 | | | | Open |
| OUT6 | — | CNBH 1-3 | Booster heater 1 output | OFF | ON |
| OUT7 | — | CNBH 5-7 | Booster heater 2 output | OFF | ON |
| OUT8 | TBO.4 7-8 | — | Cooling signal output | OFF | ON |
| OUT9 | TBO.4 5-6 | CNIH | Immersion heater output | OFF | ON |
| OUT10 | TBO.3 1-2 | — | Boiler output | OFF | ON |
| OUT11 | TBO.3 5-6 | — | Error output | Normal | Error |
| OUT12 | TBO.3 7-8 | — | Defrost output | Normal | Defrost |
| OUT13 | TBO.4 3-4 | — | 2-way valve 2a output *2 | OFF | ON |
| OUT14 | — | CNP4 | Water circulation pump 4 output (DHW) | OFF | ON |
| OUT15 | TBO.4 1-2 | — | Comp. ON signal | OFF | ON |
| OUT16 | TBO.3 3-4 | — | Thermo ON signal | OFF | ON |
| OUTA1 | TBI.4 7-8 | — | Analog output | 0V-10V | |

Do not connect to the terminals that are indicated as “—” in the “Terminal block” field.
*1. For 2-zone temperature control.
*2. For 2-zone valve ON/OFF control.

| Symbol | Name |
|---|---|
| TB1 | Terminal block <Power supply, Outdoor unit> |
| ECB1 | Earth leakage circuit breaker for booster heater |
| MP1 | Water circulation pump 1(Space heating and DHW) |
| MP2 | Water circulation pump 2 (Space heating for Zone1)(Local supply) |
| MP3 | Water circulation pump 3 (Space heating for Zone2)(Local supply) |
| MP4 | Water circulation pump 4 (DHW)(Local supply) |
| 3WV(2WV1) | 3-way valve (2-way valve 1)(Local supply) |
| 2WV2a | 2-way valve (For Zone 1)(Local supply) |
| 2WV2b | 2-way valve (For Zone 2)(Local supply) |
| MXV | Mixing valve (Local supply) |
| BHT | Thermostat for booster heater |
| BHF | Thermal fuse for booster heater |
| BH1 | Booster heater 1 |
| BH2 | Booster heater 2 |
| BHC1 | Contactor for booster heater 1 |
| BHC2 | Contactor for booster heater 2 |
| BHCP | Contactor for booster heater protection |
| TH1 | Thermistor (Room temp.)(Option) |
| TH2 | Thermistor (Ref. liquid temp.) |
| THW1 | Thermistor (Flow water temp.) |
| THW2 | Thermistor (Return water temp.) |
| THW5B | Thermistor (DHW tank water temp.)(Option) |
| THW6 | Thermistor (Zone1 flow temp.)(Option) |
| THW7 | Thermistor (Zone1 return temp.)(Option) |
| THW8 | Thermistor (Zone2 flow temp.)(Option) |
| THW9 | Thermistor (Zone2 return temp.)(Option) |
| THW10 | Thermistor (Mixing tank temp.)(Option) |
| THWB1 | Thermistor (Boiler flow temp.)(Option) |
| IN1 | Room thermostat 1 (Local supply) |
| IN2 | Flow switch 1 (Local supply) |
| IN3 | Flow switch 2 (Local supply) |
| IN4 | Demand control (Local supply) |
| IN5 | Outdoor thermostat (Local supply) |
| IN6 | Room thermostat 2 (Local supply) |
| IN7 | Flow switch 3 (Local supply) |
| IN8 | Electric energy meter 1 (Local supply) |
| IN9 | Electric energy meter 2 (Local supply) |
| IN10 | Heat meter (Local supply) |
| IN11 | Smart grid ready input (Local supply) |
| IN12 | |
| INA1 | Flow sensor |
| FLOW TEMP. CONTROLLER (FTC) | |
| TBO.1~4 | Terminal block <Outputs> |
| TBI.1~6 | Terminal block <Signal Inputs, Thermistor> |
| F1 | Fuse (IEC T10AL250V) |
| F2 | Fuse (IEC T6.3AL250V) |
| SW1~6 | DIP switch *See Table 6.6.1 |
| X1~16 | Relay |
| LED1 | Power supply (FTC) |
| LED2 | Power supply (Main remote controller) |
| LED3 | Communication (FTC-Outdoor unit) |
| LED4 | Reading or writing data to SD card |
| CNPWM | Pump speed control signal for MP1 |
| CN108 | SD card connector |

## ■ EHSD-YM9D, EHSD-YM9ED, EHSC-YM9D, EHSC-YM9ED, EHSE-YM9ED, ERSE-YM9ED, EHPX-YM9ED

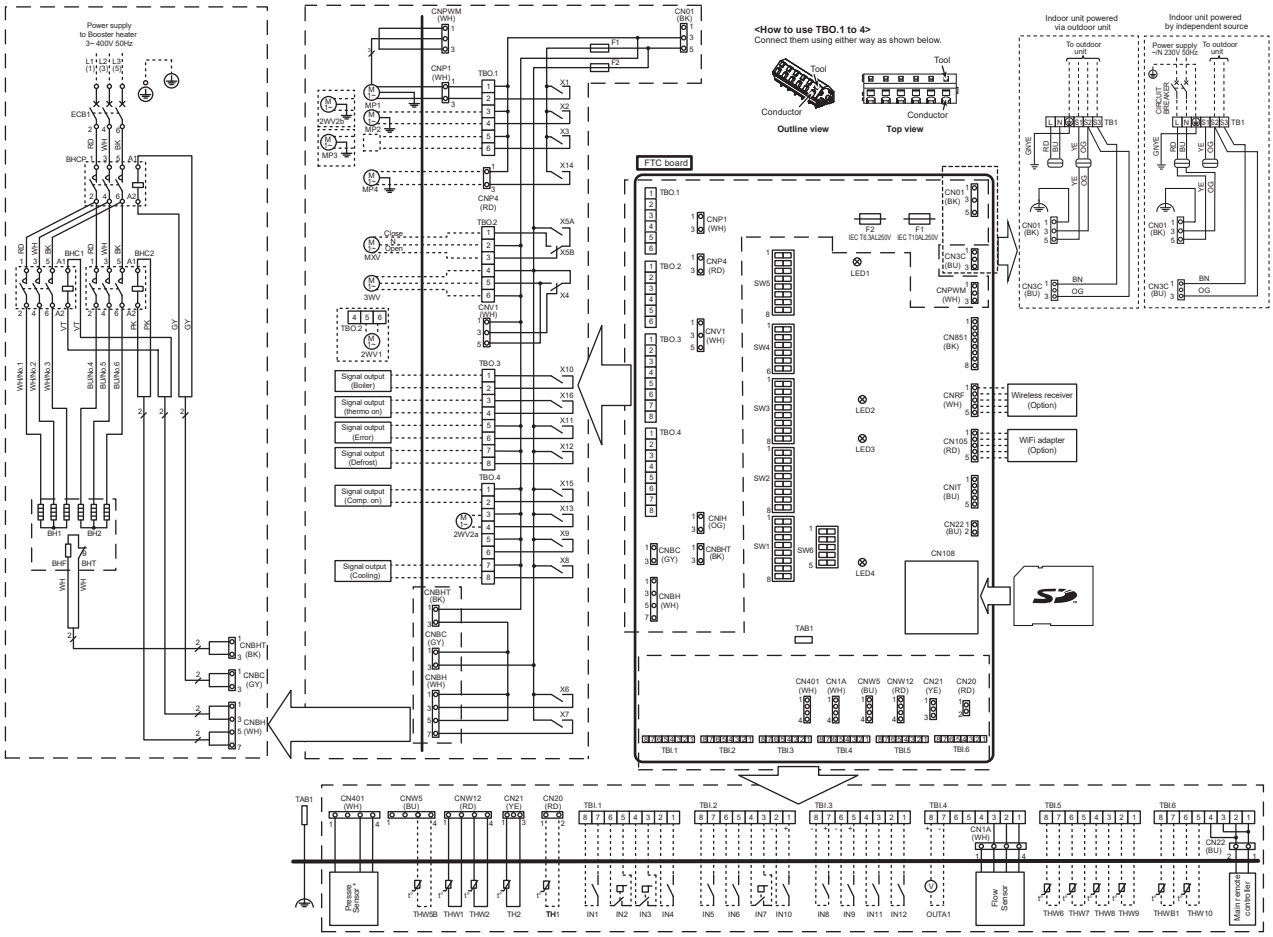


**Table 1 Signal Inputs**

| Name | Terminal block | Connector | Item | OFF (Open) | ON (Short) |
|---|---|---|---|---|---|
| IN1 | TBI.1 7-8 | — | Room thermostat 1 input *1 | Refer to SW2-1 in <Table 5.3.1 DIP Switch Functions>. | |
| IN2 | TBI.1 5-6 | — | Flow switch 1 input | Refer to SW2-2 in <Table 5.3.1 DIP Switch Functions>. | |
| IN3 | TBI.1 3-4 | — | Flow switch 2 input (Zone1) | Refer to SW3-2 in <Table 5.3.1 DIP Switch Functions>. | |
| IN4 | TBI.1 1-2 | — | Demand control input | Normal | Heat source OFF/ Boiler operation *3 |
| IN5 | TBI.2 7-8 | — | Outdoor thermostat input *2 | Standard operation | Heater operation/ Boiler operation *3 |
| IN6 | TBI.2 5-6 | — | Room thermostat 2 input *1 | Refer to SW3-1 in <Table 5.3.1 DIP Switch Functions>. | |
| IN7 | TBI.2 3-4 | — | Flow switch 3 input (Zone2) | Refer to SW3-2 in <Table 5.3.1 DIP Switch Functions>. | |
| IN8 | TBI.3 7-8 | — | Electric energy meter 1 | Refer to installation manual. | |
| IN9 | TBI.3 5-6 | — | Electric energy meter 2 | | |
| IN10 | TBI.2 1-2 | — | Heat meter | | |
| IN11 | TBI.3 3-4 | — | Smart grid ready input | | |
| IN12 | TBI.3 1-2 | — | | | |
| INA1 | TBI.4 1-3 | CN1A | Flow sensor | | |

*1. Set the ON/OFF cycle time of the room thermostat for 10 minutes or more; otherwise the compressor may be damaged.
*2. If using outdoor thermostat for controlling operation of heaters, the lifetime of the heaters and related parts may be reduced.
*3. To turn on the boiler operation, use the main remote controller to select "Boiler" in "External input setting" screen in the service menu.

**Table 2 Outputs**

| Name | Terminal block | Connector | Item | OFF | ON |
|---|---|---|---|---|---|
| OUT1 | TBO.1 1-2 | CNP1 | Water circulation pump 1 output (Space heating/cooling & DHW) | OFF | ON |
| OUT2 | TBO.1 3-4 | — | Water circulation pump 2 output (Space heating/cooling for Zone1) | OFF | ON |
| OUT3 | TBO.1 5-6 | — | Water circulation pump 3 output (Space heating/cooling for Zone2) *1 | OFF | ON |
| | | | 2-way valve 2b output *2 | | |
| OUT4 | TBO.2 4-6 | CNV1 | 3-way valve (2-way valve) output | Heating | DHW |
| | — | CN851 | 3-way valve output | | |
| OUT5 | TBO.2 1-2 | — | Mixing valve output *1 | Stop | Close |
| | TBO.2 2-3 | | | | Open |
| OUT6 | — | CNBH 1-3 | Booster heater 1 output | OFF | ON |
| OUT7 | — | CNBH 5-7 | Booster heater 2 output | OFF | ON |
| OUT8 | TBO.4 7-8 | — | Cooling signal output | OFF | ON |
| OUT9 | TBO.4 5-6 | CNIH | Immersion heater output | OFF | ON |
| OUT10 | TBO.3 1-2 | — | Boiler output | OFF | ON |
| OUT11 | TBO.3 5-6 | — | Error output | Normal | Error |
| OUT12 | TBO.3 7-8 | — | Defrost output | Normal | Defrost |
| OUT13 | TBO.4 3-4 | — | 2-way valve 2a output *2 | OFF | ON |
| OUT14 | — | CNP4 | Water circulation pump 4 output (DHW) | OFF | ON |
| OUT15 | TBO.4 1-2 | — | Comp. ON signal | OFF | ON |
| OUT16 | TBO.3 3-4 | — | Thermo ON signal | OFF | ON |
| OUTA1 | TBI.4 7-8 | — | Analog output | 0V-10V | |

Do not connect to the terminals that are indicated as "—" in the "Terminal block" field.
*1. For 2-zone temperature control.
*2. For 2-zone valve ON/OFF control.

| Symbol | Name |
|---|---|
| TB1 | Terminal block <Power supply, Outdoor unit> |
| ECB1 | Earth leakage circuit breaker for booster heater |
| MP1 | Water circulation pump 1(Space heating and DHW) |
| MP2 | Water circulation pump 2 (Space heating for Zone1)(Local supply) |
| MP3 | Water circulation pump 3 (Space heating for Zone2)(Local supply) |
| MP4 | Water circulation pump 4 (DHW)(Local supply) |
| 3WV(2WV1) | 3-way valve (2-way valve 1)(Local supply) |
| 2WV2a | 2-way valve (For Zone 1)(Local supply) |
| 2WV2b | 2-way valve (For Zone 2)(Local supply) |
| MXV | Mixing valve (Local supply) |
| BHT | Thermostat for booster heater |
| BHF | Thermal fuse for booster heater |
| BH1 | Booster heater 1 |
| BH2 | Booster heater 2 |
| BHC1 | Contactor for booster heater 1 |
| BHC2 | Contactor for booster heater 2 |
| BHCP | Contactor for booster heater protection |
| TH1 | Thermistor (Room temp.)(Option) |
| TH2 | Thermistor (Ref. liquid temp.) |
| THW1 | Thermistor (Flow water temp.) |
| THW2 | Thermistor (Return water temp.) |
| THW5B | Thermistor (DHW tank water temp.)(Option) |
| THW6 | Thermistor (Zone1 flow temp.)(Option) |
| THW7 | Thermistor (Zone1 return temp.)(Option) |
| THW8 | Thermistor (Zone2 flow temp.)(Option) |
| THW9 | Thermistor (Zone2 return temp.)(Option) |
| THW10 | Thermistor (Mixing tank temp.)(Option) |
| THWB1 | Thermistor (Boiler flow temp.)(Option) |
| IN1 | Room thermostat 1 (Local supply) |
| IN2 | Flow switch 1 (Local supply) |
| IN3 | Flow switch 2 (Local supply) |
| IN4 | Demand control (Local supply) |
| IN5 | Outdoor thermostat (Local supply) |
| IN6 | Room thermostat 2 (Local supply) |
| IN7 | Flow switch 3 (Local supply) |
| IN8 | Electric energy meter 1 (Local supply) |
| IN9 | Electric energy meter 2 (Local supply) |
| IN10 | Heat meter (Local supply) |
| IN11 | Smart grid ready input (Local supply) |
| IN12 | |
| INA1 | Flow sensor |
| FLOW TEMP. CONTROLLER (FTC) | |
| TBO.1~4 | Terminal block <Outputs> |
| TBI.1~6 | Terminal block <Signal Inputs, Thermistor> |
| F1 | Fuse (IEC T10AL250V) |
| F2 | Fuse (IEC T6.3AL250V) |
| SW1~6 | DIP switch *See Table 6.6.1 |
| X1~16 | Relay |
| LED1 | Power supply (FTC) |
| LED2 | Power supply (Main remote controller) |
| LED3 | Communication (FTC-Outdoor unit) |
| LED4 | Reading or writing data to SD card |
| CNPWM | Pump speed control signal for MP1 |
| CN108 | SD card connector |

## ■ EHSD-TM9D, EHSC-TM9D

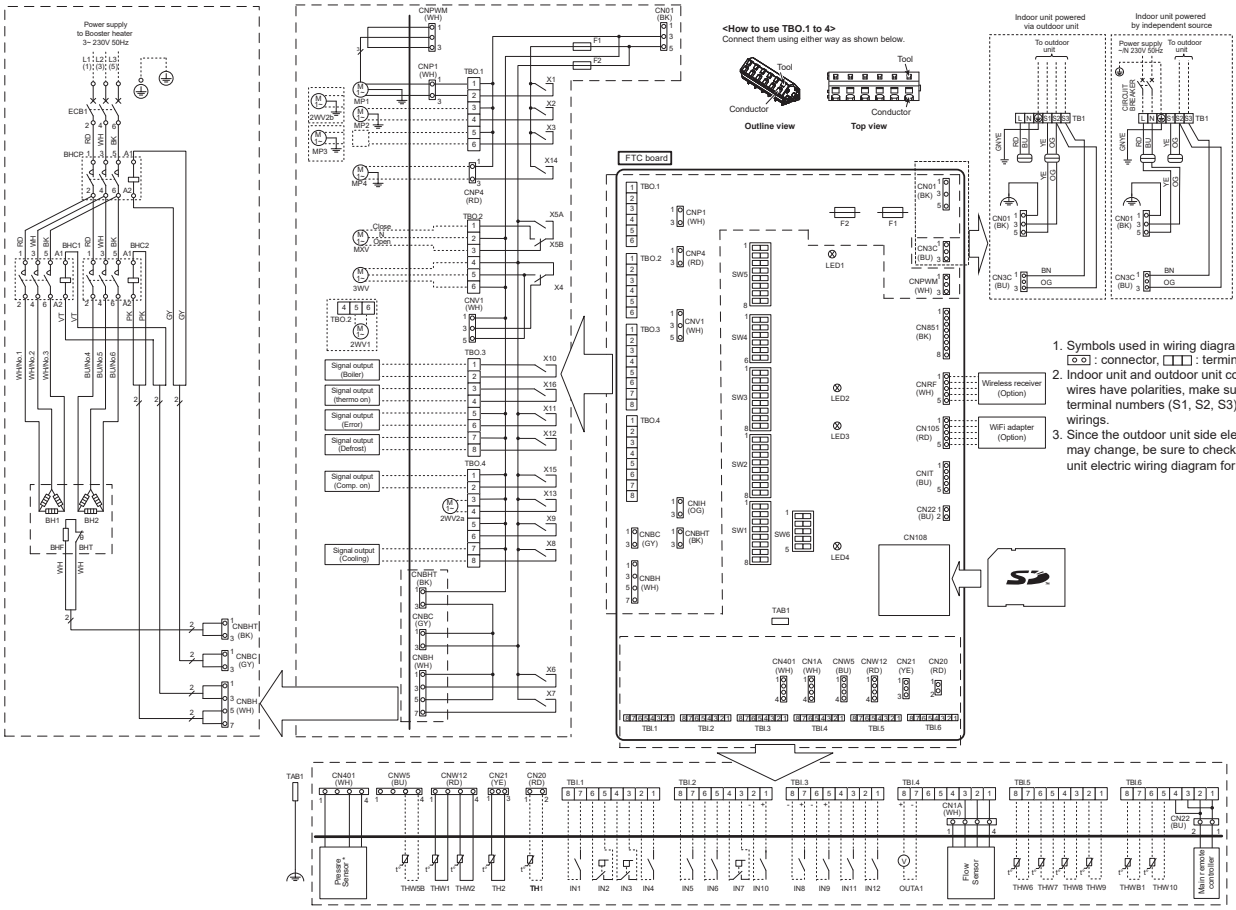


1. Symbols used in wiring diagram are, ○○ : connector, ▭▭ : terminal block.
2. Indoor unit and outdoor unit connecting wires have polarities, make sure to match terminal numbers (S1, S2, S3) for correct wirings.
3. Since the outdoor unit side electric wiring may change, be sure to check the outdoor unit electric wiring diagram for service.

**Table 1 Signal Inputs**

| Name | Terminal block | Connector | Item | OFF (Open) | ON (Short) |
|---|---|---|---|---|---|
| IN1 | TBI.1 7-8 | — | Room thermostat 1 input *1 | Refer to SW2-1 in <Table 5.3.1 DIP Switch Functions>. | |
| IN2 | TBI.1 5-6 | — | Flow switch 1 input | Refer to SW2-2 in <Table 5.3.1 DIP Switch Functions>. | |
| IN3 | TBI.1 3-4 | — | Flow switch 2 input (Zone1) | Refer to SW3-2 in <Table 5.3.1 DIP Switch Functions>. | |
| IN4 | TBI.1 1-2 | — | Demand control input | Normal | Heat source OFF/ Boiler operation *3 |
| IN5 | TBI.2 7-8 | — | Outdoor thermo-stat input *2 | Standard opera-tion | Heater operation/ Boiler operation *3 |
| IN6 | TBI.2 5-6 | — | Room thermostat 2 input *1 | Refer to SW3-1 in <Table 5.3.1 DIP Switch Functions>. | |
| IN7 | TBI.2 3-4 | — | Flow switch 3 input (Zone2) | Refer to SW3-2 in <Table 5.3.1 DIP Switch Functions>. | |
| IN8 | TBI.3 7-8 | — | Electric energy meter 1 | Refer to installation manual. | |
| IN9 | TBI.3 5-6 | — | Electric energy meter 2 | | |
| IN10 | TBI.2 1-2 | — | Heat meter | | |
| IN11 | TBI.3 3-4 | — | Smart grid ready input | | |
| IN12 | TBI.3 1-2 | — | | | |
| INA1 | TBI.4 1-3 | CN1A | Flow sensor | | |

*1. Set the ON/OFF cycle time of the room thermostat for 10 minutes or more; otherwise the compressor may be damaged.
*2. If using outdoor thermostat for controlling operation of heaters, the lifetime of the heaters and related parts may be reduced.
*3. To turn on the boiler operation, use the main remote controller to select "Boiler" in "External input setting" screen in the service menu.

**Table 2 Outputs**

| Name | Terminal block | Connector | Item | OFF | ON |
|---|---|---|---|---|---|
| OUT1 | TBO.1 1-2 | CNP1 | Water circulation pump 1 output (Space heating/cooling & DHW) | OFF | ON |
| OUT2 | TBO.1 3-4 | — | Water circulation pump 2 output (Space heating/cooling for Zone1) | OFF | ON |
| OUT3 | TBO.1 5-6 | — | Water circulation pump 3 output (Space heating/cooling for Zone2) *1<br>2-way valve 2b output *2 | OFF | ON |
| OUT4 | TBO.2 4-6 | CNV1 | 3-way valve (2-way valve) output | Heating | DHW |
| | — | CN851 | 3-way valve output | | |
| OUT5 | TBO.2 1-2 | — | Mixing valve output *1 | Stop | Close |
| | TBO.2 2-3 | | | | Open |
| OUT6 | — | CNBH 1-3 | Booster heater 1 output | OFF | ON |
| OUT7 | — | CNBH 5-7 | Booster heater 2 output | OFF | ON |
| OUT8 | TBO.4 7-8 | — | Cooling signal output | OFF | ON |
| OUT9 | TBO.4 5-6 | CNIH | Immersion heater output | OFF | ON |
| OUT10 | TBO.3 1-2 | — | Boiler output | OFF | ON |
| OUT11 | TBO.3 5-6 | — | Error output | Normal | Error |
| OUT12 | TBO.3 7-8 | — | Defrost output | Normal | Defrost |
| OUT13 | TBO.4 3-4 | — | 2-way valve 2a output *2 | OFF | ON |
| OUT14 | — | CNP4 | Water circulation pump 4 output (DHW) | OFF | ON |
| OUT15 | TBO.4 1-2 | — | Comp. ON signal | OFF | ON |
| OUT16 | TBO.3 3-4 | — | Thermo ON signal | OFF | ON |
| OUTA1 | TBI.4 7-8 | — | Analog output | 0V-10V | |

Do not connect to the terminals that are indicated as "—" in the "Terminal block" field.
*1. For 2-zone temperature control.
*2. For 2-zone valve ON/OFF control.

| Symbol | Name |
|---|---|
| TB1 | Terminal block <Power supply, Outdoor unit> |
| ECB1 | Earth leakage circuit breaker for booster heater |
| MP1 | Water circulation pump 1(Space heating & DHW) |
| MP2 | Water circulation pump 2 (Space heating for Zone1)(Local supply) |
| MP3 | Water circulation pump 3 (Space heating for Zone2)(Local supply) |
| MP4 | Water circulation pump 4 (DHW)(Local supply) |
| 3WV(2WV1) | 3-way valve (2-way valve 1)(Local supply) |
| 2WV2a | 2-way valve (For Zone 1)(Local supply) |
| 2WV2b | 2-way valve (For Zone 2)(Local supply) |
| MXV | Mixing valve (Local supply) |
| BHT | Thermostat for booster heater |
| BHF | Thermal fuse for booster heater |
| BH1 | Booster heater 1 |
| BH2 | Booster heater 2 |
| BHC1 | Contactor for booster heater 1 |
| BHC2 | Contactor for booster heater 2 |
| BHCP | Contactor for booster heater protection |
| TH1 | Thermistor (Room temp.)(Option) |
| TH2 | Thermistor (Ref. liquid temp.) |
| THW1 | Thermistor (Flow water temp.) |
| THW2 | Thermistor (Return water temp.) |
| THW5B | Thermistor (DHW tank water temp.)(Option) |
| THW6 | Thermistor (Zone1 flow temp.)(Option) |
| THW7 | Thermistor (Zone1 return temp.)(Option) |
| THW8 | Thermistor (Zone2 flow temp.)(Option) |
| THW9 | Thermistor (Zone2 return temp.)(Option) |
| THW10 | Thermistor (Mixing tank temp.)(Option) |
| THWB1 | Thermistor (Boiler flow temp.)(Option) |
| IN1 | Room thermostat 1 (Local supply) |
| IN2 | Flow switch 1 (Local supply) |
| IN3 | Flow switch 2 (Local supply) |
| IN4 | Demand control (Local supply) |
| IN5 | Outdoor thermostat (Local supply) |
| IN6 | Room thermostat 2 (Local supply) |
| IN7 | Flow switch 3 (Local supply) |
| IN8 | Electric energy meter 1 (Local supply) |
| IN9 | Electric energy meter 2 (Local supply) |
| IN10 | Heat meter (Local supply) |
| IN11 | Smart grid ready input (Local supply) |
| IN12 | |
| INA1 | Flow sensor |
| FLOW TEMP. CONTROLLER (FTC) | |
| TBO.1~4 | Terminal block <Outputs> |
| TBI.1~6 | Terminal block <Signal Inputs, Thermistor> |
| F1 | Fuse (IEC T10AL250V) |
| F2 | Fuse (IEC T6.3AL250V) |
| SW1~6 | DIP switch *See Table 3 |
| X1~16 | Relay |
| LED1 | Power supply (FTC) |
| LED2 | Power supply (Main remote controller) |
| LED3 | Communication (FTC-Outdoor unit) |
| LED4 | Reading or writing data to SD card |
| CNPWM | Pump speed control signal for MP1 |
| CN108 | SD card connector |

## 5.3. DIP Switch Functions

The DIP switch number is printed on the circuit board next to the relevant switches. The word ON is printed on the circuit board and on the DIP switch block itself. To move the switch you need to use a pin or the corner of a thin metal ruler or similar.

DIP switch settings are listed below in Table 5.3.1.
Only an authorised installer can change DIP switch setting under one's own responsibility according to the installation condition.
Make sure to turn off both indoor unit and outdoor unit power supplies before changing the switch settings.

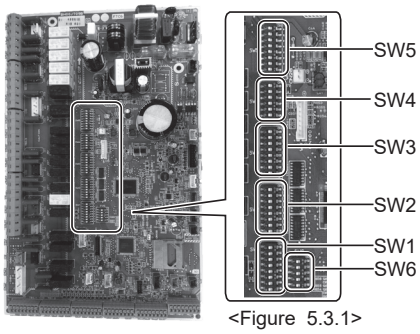

<Figure 5.3.1>

<Table 5.3.1>

| DIP switch | | Function | OFF | ON | Default settings: Indoor model name |
|---|---|---|---|---|---|
| SW1 | SW1-1 | Boiler | WITHOUT Boiler | WITH Boiler | OFF |
| | SW1-2 | Heat pump maximum outlet water temperature | 55ºC | 60ºC | ON *1 |
| | SW1-3 | DHW tank | WITHOUT DHW tank | WITH DHW tank | OFF |
| | SW1-4 | Immersion heater | WITHOUT Immersion heater | WITH Immersion heater | OFF |
| | SW1-5 | Booster heater | WITHOUT Booster heater | WITH Booster heater | OFF: E***-M*D<br>ON : E***-*M2/6/9*D |
| | SW1-6 | Booster heater function | For heating only | For heating and DHW | OFF: E***-M*D<br>ON : E***-*M2/6/9*D |
| | SW1-7 | Outdoor unit type | Split type | Packaged type | OFF: Except E*PX-*M**D<br>ON : E*PX-*M**D |
| | SW1-8 | Wireless remote controller | WITHOUT Wireless remote controller | WITH Wireless remote controller | OFF |
| SW2 | SW2-1 | Room thermostat1 input (IN1) logic change | Zone1 operation stop at thermostat short | Zone1 operation stop at thermostat open | OFF |
| | SW2-2 | Flow switch1 input (IN2) logic change | Failure detection at short | Failure detection at open | OFF |
| | SW2-3 | Booster heater capacity restriction | Inactive | Active | OFF: Except E***-VM2*D<br>ON : E***-VM2*D |
| | SW2-4 | Cooling mode function | Inactive | Active | OFF: Except ER**-*M**D<br>ON : ER**-*M**D |
| | SW2-5 | Automatic switch to backup heat source operation (When outdoor unit stops by error) | Inactive | Active *2 | OFF |
| | SW2-6 | Mixing tank | WITHOUT Mixing tank | WITH Mixing tank | OFF |
| | SW2-7 | 2-zone temperature control | Inactive | Active *3 | OFF |
| | SW2-8 | Flow sensor | WITHOUT Flow sensor | WITH Flow sensor | ON |
| SW3 | SW3-1 | Room thermostat 2 input logic change | Zone2 operation stop at thermostat short | Zone2 operation stop at thermostat open | OFF |
| | SW3-2 | Flow switch 2 and 3 input logic change | Failure detection at short | Failure detection at open | OFF |
| | SW3-3 | — | — | — | OFF |
| | SW3-4 | Electric energy meter | WITHOUT Electric energy meter | WITH Electric energy meter | OFF |
| | SW3-5 | Heating mode function *4 | Inactive | Active | ON |
| | SW3-6 | 2-zone valve ON/OFF control | Inactive | Active | OFF |
| | SW3-7 | — | — | — | OFF |
| | SW3-8 | Heat meter | WITHOUT Heat meter | WITH Heat meter | OFF |
| SW4 | SW4-1 | Multiple outdoor units control | Inactive | Active | OFF |
| | SW4-2 | Position of multiple outdoor units control *5 | Sub | Main | OFF |
| | SW4-3 | — | — | — | OFF |
| | SW4-4 | Indoor unit only operation (during installation work) *6 | Inactive | Active | OFF |
| | SW4-5 | Emergency mode (Heater only operation) | Normal | Emergency mode (Heater only operation) | OFF *7 |
| | SW4-6 | Emergency mode (Boiler operation) | Normal | Emergency mode (Boiler operation) | OFF *7 |
| SW5 | SW5-1 | DHW tank water temperature over heat protection (L4) | Active | Inactive *8 | OFF |
| | SW5-2 | Advanced auto adaptation | Inactive | Active | ON |
| | SW5-3 | Capacity code | | | |
| | SW5-4 | | | | |
| | SW5-5 | | | | |
| | SW5-6 | | | | |
| | SW5-7 | | | | |
| | SW5-8 | — | — | — | OFF |
| SW6 | SW6-1 | — | — | — | OFF |
| | SW6-2 | — | — | — | OFF |
| | SW6-3 | Pressure sensor | Inactive | Active | OFF: Except E*SD-*M**D<br>ON : E*SD-*M**D |
| | SW6-4 | Analog output signal (0 to 10V) | Inactive | Active | OFF |
| | SW6-5 | — | — | — | OFF |

| | SW5-3 | SW5-4 | SW5-5 | SW5-6 | SW5-7 |
|---|---|---|---|---|---|
| E*SC-*M**D | ON | ON | ON | ON | OFF |
| E*SD-*M**D | ON | OFF | OFF | ON | OFF |
| E*SE-*M*ED | OFF | ON | ON | OFF | ON |
| E*PX-*M**D | OFF | OFF | OFF | OFF | OFF |

**Notes:**
***1. When the hydrobox is connected with a PUMY-P and PXZ outdoor unit of which maximum outlet water temperature is 55ºC, DIP SW1-2 must be changed to OFF.**
***2. OUT11 will be available. For safety reasons, this function is not available for certain errors. (In that case, system operation must be stopped and only the water circulation pump keeps running.)**
***3 This switch functions only when the hydrobox is connected with a PUHZ-FRP outdoor unit. When another type of outdoor unit is connected, the heating mode function is active regardless of the fact that this switch is ON or OFF.**
***4. Space heating and DHW can be operated only in indoor unit, like an electric heater. (Refer to "5.4.4 Indoor unit only operation". )**
***5. If emergency mode is no longer required, return the switch to OFF position.**
***6. Active only when SW3-6 is set to OFF.**
***7. Active only when SW4-1 is set to ON.**
***8. Please make sure to have necessary overheat protection on locally supplied solar thermal system side to secure safety, as the tank temperature could be much higher (than current).**

## 5.4. Field wiring

### 5.4.1 Electrical Connection

All electrical work should be carried out by a suitably qualified technician. Failure to comply with this could lead to electrocution, fire, and death. It will also invalidate product warranty. All wiring should be according to national wiring regulations.

| Breaker abbreviation | Meaning |
|---|---|
| ECB1 | Earth leakage circuit breaker for booster heater |
| TB1 | Terminal block 1 |

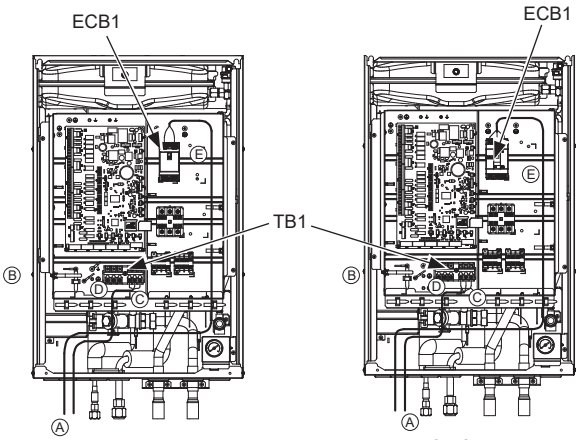


<Figure 5.4.1>

The hydrobox can be powered in two ways.
1. Power cable is run from the outdoor unit to the hydrobox.
2. Hydrobox has independent power source.

Connections should be made to the terminals indicated in the figures to the left below depending on the phase.

Booster heater and immersion heater should be connected independently from one another to dedicated power supplies.

Ⓐ Locally supplied wiring should be inserted through the inlets situated on the base of the hydrobox. (Refer to <Table 5.1.1>.)
Ⓑ Wiring should be fed down the left hand side of the control and electrical box and clamped in place using clips provided.
Ⓒ The wires should be fixed with the cable straps as below.
② Output wires
③ Indoor-Outdoor wire
⑥ Power line (B.H.)
⑦ Signal input wires/ Wireless receiver (option) wire (PAR-WR51R-E)

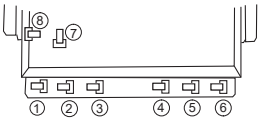


Ⓓ Connect the outdoor unit – hydrobox connecting cable to TB1.
Ⓔ Connect the power cable for the booster heater to ECB1.

• Make sure that ECB1 is ON.

### ■ Option 1: Hydrobox powered via outdoor unit

PXZ model is not available.
The model is Hydrobox powered by independent source ONLY.

#### <1 phase>

Affix label A that is included with the manuals near each wiring diagram for hydrobox and outdoor units.

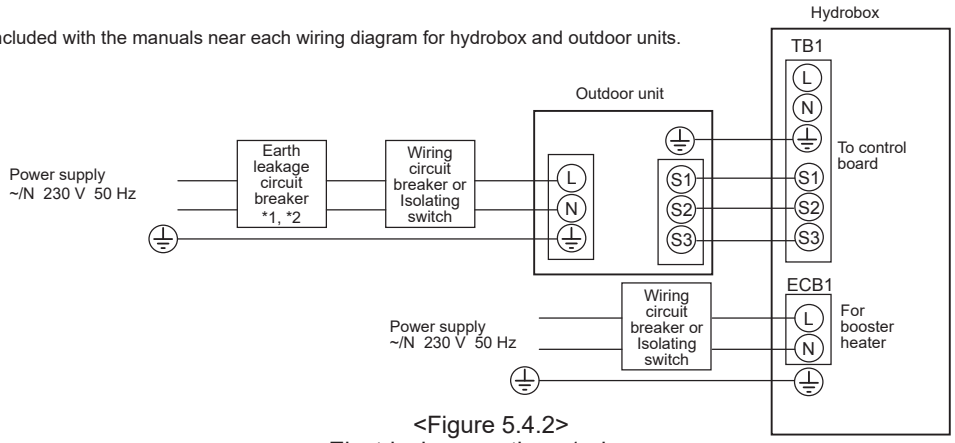


<Figure 5.4.2>
Electrical connections 1 phase

| Description | Power supply | Capacity | Breaker | Wiring |
|---|---|---|---|---|
| Booster heater | ~/N 230 V 50 Hz | 2 kW | 16 A *2 | 2.5 mm² |
| | | 6 kW | 32 A *2 | 6.0 mm² |

| | | <E*SD/E*SC/E*PX series> | <E*SE series> |
|---|---|---|---|
| Wiring No. × size (mm²) | Hydrobox - Outdoor unit | 3 × 1.5 (polar) *3 | 3 × 4 (polar) *4 |
| | Hydrobox - Outdoor unit earth | 1 × Min. 1.5 *3 | 1 × Min. 2.5 *5 |
| Circuit rating | Hydrobox - Outdoor unit S1 - S2 *6 | 230 V AC | 230 V AC |
| | Hydrobox - Outdoor unit S2 - S3 *6 | 24 V DC | 24 V DC |

*1. If the installed earth leakage circuit breaker does not have an over-current protection function, install a breaker with that function along the same power line.
*2. A breaker with at least 3.0 mm contact separation in each pole shall be provided. Use earth leakage breaker (NV).
The breaker shall be provided to ensure disconnection of all active phase conductors of the supply.
*3. Max. 45 m
If 2.5 mm² used, Max. 50 m
If 2.5 mm² used and S3 separated, Max. 80 m
*4. Max. 50 m
If 6 mm² used, Max. 80 m
*5. If S3 separated, Max. 80 m
*6. The values given in the table above are not always measured against the ground value.

**Notes:**
**1. Wiring size must comply with the applicable local and national codes.**
**2. Indoor unit/outdoor unit connecting cords shall not be lighter than polychloroprene sheathed flexible cord. (Design 60245 IEC 57)**
**Indoor unit power supply cords shall not be lighter than polychloroprene sheathed flexible cord. (Design 60227 IEC 53)**
**3. Install an earth longer than other cables.**
**4. Please keep enough output capacity of power supply for each heater. Insufficient power supply capacity might cause chattering.**

### <3 phase>

Affix label A that is included with the manuals near each wiring diagram for hydrobox and outdoor units.

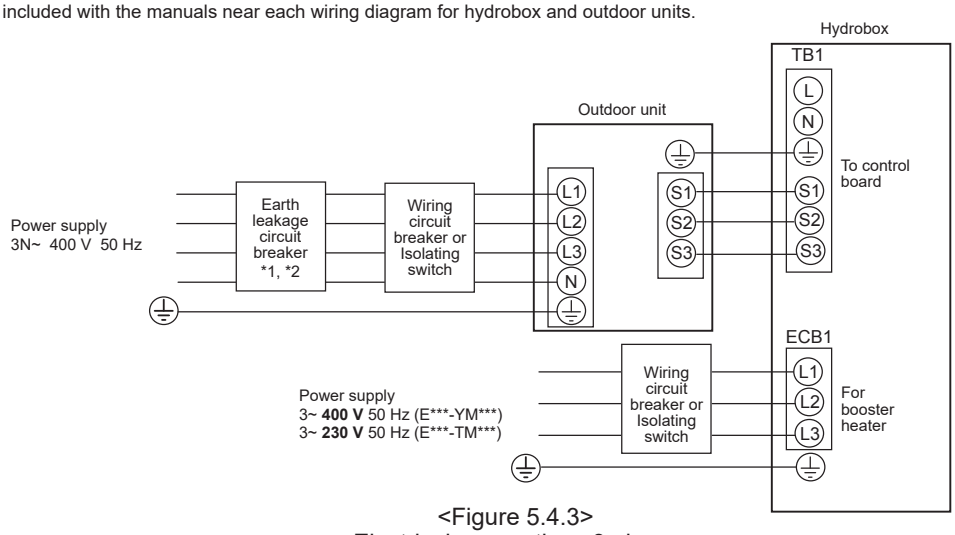


<Figure 5.4.3>
Electrical connections 3 phase

| Description | Power supply | Capacity | Breaker | Wiring |
|---|---|---|---|---|
| Booster heater | 3~ 400 V 50 Hz | 9 kW | 16 A *2 | 2.5 mm² |
| | 3~ 230 V 50 Hz | 9 kW | 32 A *2 | 6.0 mm² |

| | | <E*SD/E*SC/E*PX series> | <E*SE series> |
|---|---|---|---|
| Wiring No. × size (mm²) | Hydrobox - Outdoor unit | 3 × 1.5 (polar) *3 | 3 × 4 (polar) *4 |
| | Hydrobox - Outdoor unit earth | 1 × Min. 1.5 *3 | 1 × Min. 2.5 *5 |
| Circuit rating | Hydrobox - Outdoor unit S1 - S2 *6 | 230 V AC | 230 V AC |
| | Hydrobox - Outdoor unit S2 - S3 *6 | 24 V DC | 24 V DC |

*1. If the installed earth leakage circuit breaker does not have an over-current protection function, install a breaker with that function along the same power line.
*2. A breaker with at least 3.0 mm contact separation in each pole shall be provided. Use earth leakage breaker (NV).
The breaker shall be provided to ensure disconnection of all active phase conductors of the supply.
*3. Max. 45 m
If 2.5 mm² used, Max. 50 m
If 2.5 mm² used and S3 separated, Max. 80 m
*4. Max. 50 m
If 6 mm² used, Max. 80 m
*5. If S3 separated, Max. 80 m
*6. The values given in the table above are not always measured against the ground value.

**Notes:**
**1. Wiring size must comply with the applicable local and national codes.**
**2. Indoor unit/outdoor unit connecting cords shall not be lighter than polychloroprene sheathed flexible cord. (Design 60245 IEC 57)**
**Indoor unit power supply cords shall not be lighter than polychloroprene sheathed flexible cord. (Design 60227 IEC 53)**
**3. Install an earth line longer than power cables.**
**4. Please keep enough output capacity of power supply for each heater. Insufficient power supply capacity might cause chattering.**

## ■ Option 2: Hydrobox powered by independent source

If the hydrobox and outdoor units have separate power supplies, the following requirements MUST be carried out:

- **Change connector connections in hydrobox control and electrical box (see Figure 2.3).**
- **Turn the outdoor unit DIP switch SW8-3 to ON.**
- **Turn on the outdoor unit BEFORE the hydrobox.**
- **Power by independent source is not available for particular models of outdoor unit model.**
  **For more detail, refer to the connecting outdoor unit installation manual.**

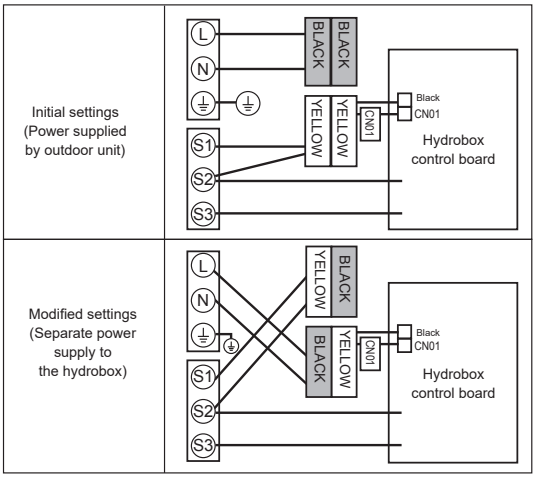


<Figure 5.4.4>

### <1 phase>

Affix label B that is included with the manuals near each wiring diagram for hydrobox and outdoor units.

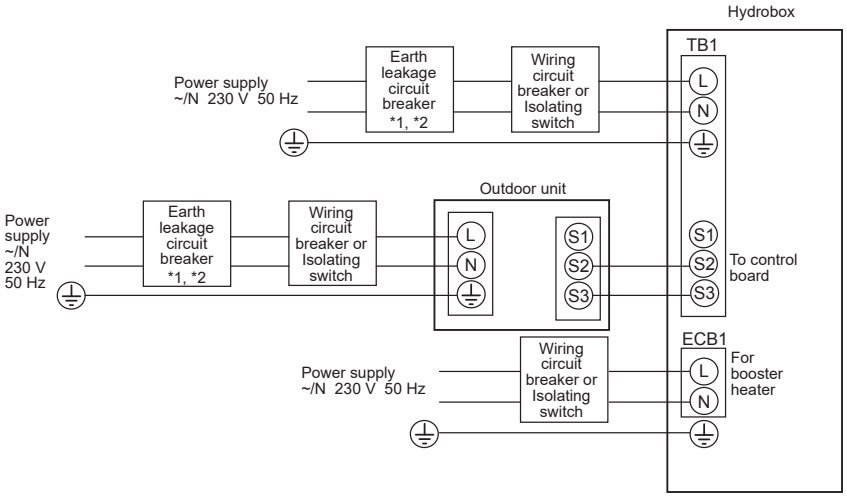


| Description | Power supply | Capacity | Breaker | Wiring |
|---|---|---|---|---|
| Booster heater | ~/N 230 V 50 Hz | 2 kW | 16 A *2 | 2.5 mm² |
| | | 6 kW | 32 A *2 | 6.0 mm² |

<Figure 5.4.5>
Electrical connections 1 phase

### <3 phase>

Affix label B that is included with the manuals near each wiring diagram for hydrobox and outdoor units.

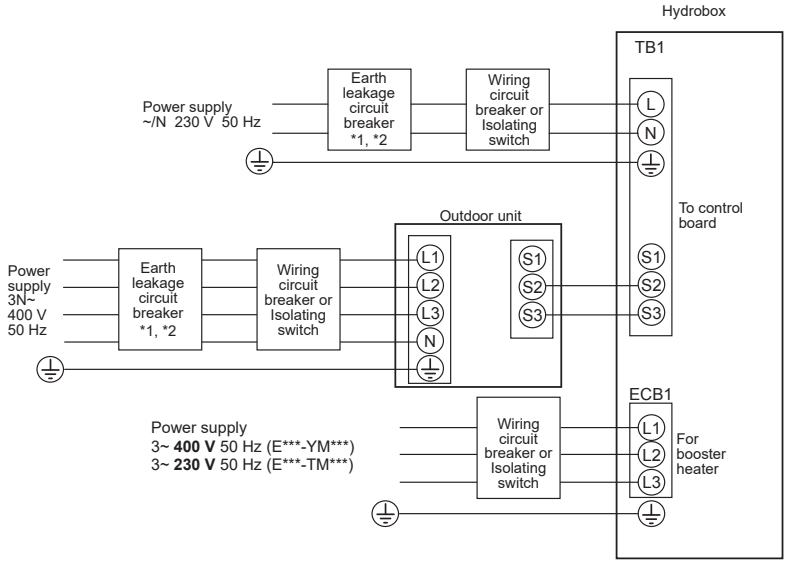


| Description | Power supply | Capacity | Breaker | Wiring |
|---|---|---|---|---|
| Booster heater | 3~ 400 V 50 Hz | 9 kW | 16 A *2 | 2.5 mm² |

<Figure 5.4.6>
Electrical connections 3 phase

| | | | |
|---|---|---|---|
| Hydrobox power supply | | | ~/N 230 V 50 Hz |
| Hydrobox input capacity Main switch (Breaker) | | *2 | 16 A |
| Wiring Wiring No. × size (mm²) | Hydrobox power supply | | 2 × Min. 1.5 |
| | Hydrobox power supply earth | | 1 × Min. 1.5 |
| | Hydrobox - Outdoor unit | *3 | 2 × Min. 0.3 |
| | Hydrobox - Outdoor unit earth | | — |
| Circuit rating | Hydrobox L - N | *4 | 230 V AC |
| | Hydrobox - Outdoor unit S1 - S2 | *4 | — |
| | Hydrobox - Outdoor unit S2 - S3 | *4 | 24 V DC |

*1. If the installed earth leakage circuit breaker does not have an over-current protection function, install a breaker with that function along the same power line.
*2. A breaker with at least 3.0 mm contact separation in each pole shall be provided. Use earth leakage breaker (NV).
The breaker shall be provided to ensure disconnection of all active phase conductors of the supply.
*3. Max. 120 m
*4. The values given in the table above are not always measured against the ground value.

**Notes:**
1. **Wiring size must comply with the applicable local and national codes.**
2. **Indoor unit/outdoor unit connecting cords shall not be lighter than polychloroprene sheathed flexible cord. (Design 60245 IEC 57)**
   **Indoor unit power supply cords shall not be lighter than polychloroprene sheathed flexible cord. (Design 60227 IEC 53)**
3. **Install an earth line longer than power cables.**
4. **Please keep enough output capacity of power supply for each heater. Insufficient power supply capacity might cause chattering.**

### 5.4.2 Connecting inputs/outputs

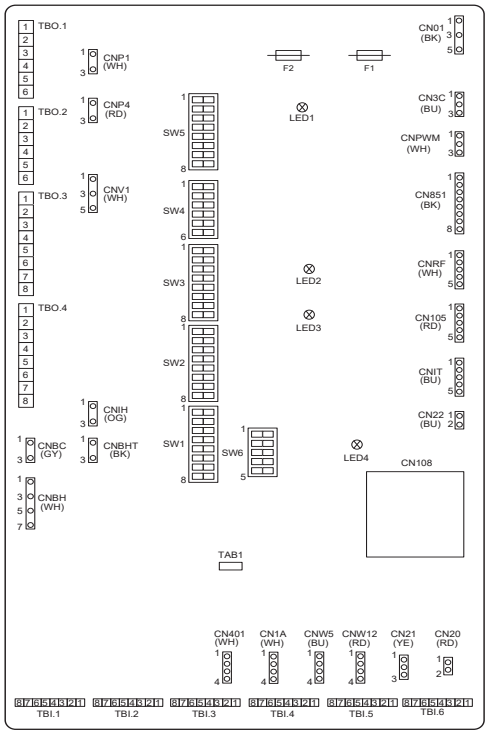


<Figure 5.4.7>

**Wiring specification and local supply parts**

| Item | Name | Model and specifications |
|---|---|---|
| Signal input function | Signal input wire | Use sheathed vinyl coated cord or cable.<br>Max. 30 m<br>Wire type: CV, CVS or equivalent<br>Wire size: Stranded wire 0.13 mm² to 0.52 mm²<br>Solid wire: ø0.4 mm to ø0.8 mm |
| | Switch | Non-voltage “a” contact signals<br>Remote switch: minimum applicable load 12 V DC, 1 mA |

**Note:**
**Stranded wire should be processed with insulation-covered bar terminal (DIN46228-4 standard compatible type).**

## ■ Signal inputs

| Name | Terminal block | Connector | Item | OFF (Open) | ON (Short) |
|---|---|---|---|---|---|
| IN1 | TBI.1 7-8 | — | Room thermostat 1 input *1 | Refer to SW2-1 in <5.3 DIP Switch Functions>. | |
| IN2 | TBI.1 5-6 | — | Flow switch 1 input | Refer to SW2-2 in <5.3 DIP Switch Functions>. | |
| IN3 | TBI.1 3-4 | — | Flow switch 2 input (Zone1) | Refer to SW3-2 in <5.3 DIP Switch Functions>. | |
| IN4 | TBI.1 1-2 | — | Demand control input | Normal | Heat source OFF/ Boiler operation *3 |
| IN5 | TBI.2 7-8 | — | Outdoor thermostat input *2 | Standard operation | Heater operation/ Boiler operation *3 |
| IN6 | TBI.2 5-6 | — | Room thermostat 2 input *1 | Refer to SW3-1 in <5.3 DIP Switch Functions>. | |
| IN7 | TBI.2 3-4 | — | Flow switch 3 input (Zone2) | Refer to SW3-2 in <5.3 DIP Switch Functions>. | |
| IN8 | TBI.3 7-8 | — | Electric energy meter 1 | *4 | |
| IN9 | TBI.3 5-6 | — | Electric energy meter 2 | | |
| IN10 | TBI.2 1-2 | — | Heat meter | | |
| IN11 | TBI.3 3-4 | — | Smart grid ready input | *5 | |
| IN12 | TBI.3 1-2 | — | | | |
| INA1 | TBI.4 1-3 | CN1A | Flow sensor | — | — |

*1. Set the ON/OFF cycle time of the room thermostat for 10 minutes or more; otherwise the compressor may be damaged.
*2. If using outdoor thermostat for controlling operation of heaters, the lifetime of the heaters and related parts may be reduced.
*3. To turn on the boiler operation, use the main remote controller to select “Boiler” in “External input setting“ screen in the service menu.
*4. Connectable electric energy meter and heat meter

- Pulse type: Voltage free contact for 12 V DC detection by FTC (TBI.2 1 pin, TBI.3 5 and 7 pins have a positive voltage.)
- Pulse duration: Minimum ON time: 40 ms
  Minimum OFF time: 100 ms
- Possible unit of pulse: 0.1 pulse/kWh, 1 pulse/kWh, 10 pulse/kWh, 100 pulse/kWh, 1000 pulse/kWh

Those values can be set by the main remote controller. (Refer to the menu tree in "Main remote controller".)
*5. As for the smart grid ready, refer to section 5.7.

## ■ Thermistor inputs

| Name | Terminal block | Connector | Item | Optional part model |
|---|---|---|---|---|
| TH1 | — | CN20 | Thermistor (Room temp.) (Option) | PAC-SE41TS-E |
| TH2 | — | CN21 | Thermistor (Ref. liquid temp.) | — |
| THW1 | — | CNW12 1-2 | Thermistor (Flow water temp.) | — |
| THW2 | — | CNW12 3-4 | Thermistor (Return water temp.) | — |
| THW5B | — | CNW5 3-4 | Thermistor (DHW tank water temp.) (Option) *1 | PAC-TH011TK2-E(5 m)/ PAC-TH011TKL2-E(30 m) |
| THW6 | TBI.5 7-8 | — | Thermistor (Zone1 flow water temp.) (Option) *1 | PAC-TH011-E |
| THW7 | TBI.5 5-6 | — | Thermistor (Zone1 return water temp.) (Option) *1 | |
| THW8 | TBI.5 3-4 | — | Thermistor (Zone2 flow water temp.) (Option) *1 | PAC-TH011-E |
| THW9 | TBI.5 1-2 | — | Thermistor (Zone2 return water temp.) (Option) *1 | |
| THW10 | TBI.6 5-6 | — | Thermistor (Mixing tank water temp.)(Option) *1 | PAC-TH012HT-E(5 m)/ PAC-TH012HTL-E(30 m) |
| THWB1 | TBI.6 7-8 | — | Thermistor (Boiler flow water temp.) (Option) *1 | |

**Ensure to wire thermistor wirings away from the power line and/or OUT1 to 16 wirings.**
***1. The maximum length of the thermistor wiring is 30 m. When the wires are wired to adjacent terminals, use ring terminals and insulate the wires. The length of the optional thermistors are 5 m. If you need to splice and extend the wirings, following points must be carried out.**
**1) Connect the wirings by soldering.**
**2) Insulate each connecting point against dust and water.**

## ■ Outputs

| Name | Terminal block | Connector | Item | OFF | ON | Signal/Max. current | Max. total current |
|---|---|---|---|---|---|---|---|
| OUT1 | TBO.1 1-2 | CNP1 | Water circulation pump 1 output (Space heating/cooling & DHW) | OFF | ON | 230 V AC 1.0 A Max. (Inrush current 40 A Max.) | 4.0 A (a) |
| OUT2 | TBO.1 3-4 | — | Water circulation pump 2 output (Space heating/cooling for Zone1) | OFF | ON | 230 V AC 1.0 A Max. (Inrush current 40 A Max.) | |
| OUT3 | TBO.1 5-6 | — | Water circulation pump 3 output (Space heating/cooling for Zone2) *1 | OFF | ON | 230 V AC 1.0 A Max. (Inrush current 40 A Max.) | |
| | | | 2-way valve 2b output *2 | | | | |
| OUT14 | — | CNP4 | Water circulation pump 4 output (DHW) | OFF | ON | 230 V AC 1.0 A Max. (Inrush current 40 A Max.) | |
| OUT4 | TBO.2 4-6 | CNV1 | 3-way valve (2-way valve 1) output | Heating | DHW | 230 V AC 0.1 A Max. | 3.0 A (b) |
| | — | CN851 | 3-way valve output | | | | |
| OUT5 | TBO.2 1-2 | — | Mixing valve output *1 | Stop | Close | 230 V AC 0.1 A Max. | |
| | TBO.2 2-3 | | | | Open | | |
| OUT6 | — | CNBH 1-3 | Booster heater 1 output | OFF | ON | 230 V AC 0.5 A Max. (Relay) | |
| OUT7 | — | CNBH 5-7 | Booster heater 2 output | OFF | ON | 230 V AC 0.5 A Max. (Relay) | |
| OUT8 | TBO.4 7-8 | — | Cooling signal output | OFF | ON | 230 V AC 0.5 A Max. | |
| OUT9 | TBO.4 5-6 | CNIH | Immersion heater output | OFF | ON | 230 V AC 0.5 A Max. (Relay) | |
| OUT11 | TBO.3 5-6 | — | Error output | Normal | Error | 230 V AC 0.5 A Max. | |
| OUT12 | TBO.3 7-8 | — | Defrost output | Normal | Defrost | 230 V AC 0.5 A Max. | |
| OUT13 | TBO.4 3-4 | — | 2-way valve 2a output *2 | OFF | ON | 230 V AC 0.1 A Max. | |
| OUT15 | TBO.4 1-2 | — | Comp ON signal | OFF | ON | 230 V AC 0.5 A Max. | |
| OUT10 | TBO.3 1-2 | — | Boiler output | OFF | ON | non-voltage contact · 220-240 V AC (30 V DC) 0.5 A or less · 10 mA 5 V DC or more | — |
| OUT16 | TBO.3 3-4 | — | Heating/Cooling thermo ON signal | OFF | ON | | |
| OUTA1 | TBI.4 7-8 | — | Analog output | 0 V-10 V | | 0-10 V DC 5 mA max. | — |

**Do not connect to the terminals that are indicated as "—" in the "Terminal block" field.**
***1 For 2-zone temperature control.**
***2 For 2-zone valve ON/OFF control.**

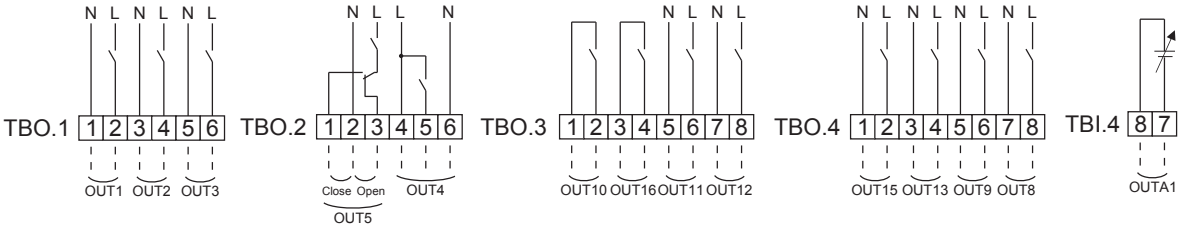


**Wiring specification and local supply parts**

| Item | Name | Model and specifications |
|---|---|---|
| External output function | Outputs wire | Use sheathed vinyl coated cord or cable.<br>Max. 30 m<br>Wire type: CV, CVS or equivalent<br>Wire size: Stranded wire 0.25 mm² to 1.5 mm²<br>Solid wire: 0.25 mm² to 1.5 mm² |

**How to use TBO.1 to 4**

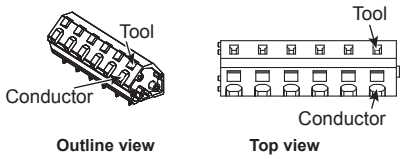


**Connect them using either way as shown above.**

<Figure 5.4.8>

**Note:**
**1. When the hydrobox is powered via outdoor unit, the maximum grand total current of (a)+(b) is 3.0 A.**
**2. Do not connect multiple water circulation pumps directly to each output (OUT1, OUT2, and OUT3). In such a case, connect them via (a) relay(s).**
**3. Do not connect water circulation pumps to both TBO.1 1-2 and CNP1 at the same time.**
**4. Connect an appropriate surge absorber to OUT10 (TBO.3 1-2) depending on the load at site.**
**5. Stranded wire should be processed with insulation-covered bar terminal (DIN46228-4 standard compatible type).**
**6. Use the same thing as the Signal input wire for OUTA1 wiring.**

### 5.4.3 Wiring for 2-zone temperature control

Connect the pipe work and locally supplied parts according to the relevant circuit diagram shown "5.5.3 Local system".

<Mixing valve>
Connect the signal line to open Port A (hot water inlet port) to TBO. 2-3 (Open), the signal line to open Port B (cold water inlet port) to TBO. 2-1 (Close) , and the neutral terminal wire to TBO. 2-2 (N).

<Thermistor>
•Do not install the thermistors on the mixing tank.
•Install the Zone2 flow temp. thermistor (THW8) near the mixing valve.
•The maximum length of the thermistor wiring is 30 m.
•The length of the optional thermistors are 5 m. If you need to splice and extend the wirings, following points must be carried out.
1) Connect the wirings by soldering.
2) Insulate each connecting point against dust and water.

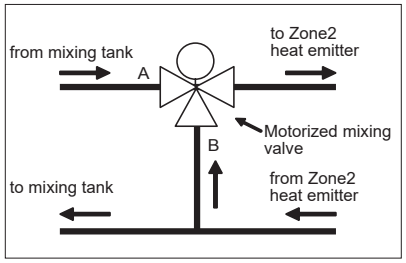


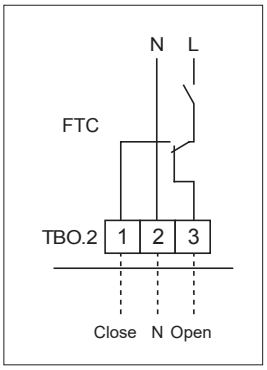

## 5.4.4 Indoor unit only operation (during installation work)

In the case when DHW or heating operation is required prior to connection of the outdoor unit; i.e. during installation work, an electric heater in indoor unit (*1) can be used.
*1 Model with electric heater only.

1. To start operation
● Check if the indoor unit power supply is OFF, and turn DIP switch 4-4 and 4-5 ON.
● Turn ON the indoor unit power supply.

2. To end operation *2
● Turn OFF the indoor unit power supply.
● Turn DIP switch 4-4 and 4-5 OFF.
*2 When the indoor unit only operation is ended, ensure to check over the settings after outdoor unit is connected.

**Note:**
**Prolonged running of the this operation may affect the life of the electric heater.**

## 5.4.5 Using SD memory card

The hydrobox is equipped with an SD memory card interface in FTC.
Using an SD memory card can simplify main remote controller settings and can store operating logs. *1

*1 To edit main remote controller settings or to check operating data, an Ecodan service tool (for use with PC) is required.

**<Handling precautions>**
(1) Use an SD memory card that complies with the SD standards. Check that the SD memory card has a logo on it of those shown to the right.
(2) SD memory cards to the SD standards include SD, SDHC, miniSD, micro SD, and microSDHC memory cards. The capacities are available up to 32 GB. Choose that with a maximum allowable temperature of 55ºC.
(3) When the SD memory card is a miniSD, miniSDHC, microSD, or micro SDHC memory card, use an SD memory card converter adapter.
(4) Before writing to the SD memory card, release the write-protect switch.

(5) Before inserting or ejecting an SD memory card, make sure to power off the system. If an SD memory card is inserted or ejected with the system powered on, the stored data could be corrupted or the SD memory card be damaged. *An SD memory card is live for a short duration after the system is powered off. Before insertion or ejection wait until the LED lamps on the FTC control board are all off.
(6) The read and write operations have been verified using the following SD memory cards, however, these operations are not always guaranteed as the specifications of these SD memory cards could change.

| Manufacturer | Model | Tested in |
|---|---|---|
| Verbatim | #44015 | Mar. 2012 |
| SanDisk | SDSDB-002G-B35 | Oct. 2011 |
| Panasonic | RP-SDP04GE1K | Oct. 2011 |
| Arvato | 2GB PS8032 TSB 24nm MLC | Jun. 2012 |
| Arvato | 2GB PS8035 TSB A19nm MLC | Jul. 2014 |
| SanDisk | SDSDUN-008G-G46 | Oct. 2016 |
| Verbatim | #43961 | Oct. 2016 |
| Verbatim | #44018 | Oct. 2016 |
| VANTASTEK | VSDHC08 | Sep. 2017 |
| RiTEK | RiDATA 8GB SDHC | Aug. 2021 |

Before using a new SD memory card (including the card that comes with the unit), always check that the SD memory card can be safely read and written to by the FTC controller.
<How to check read and write operations>
a) Check for correct wiring of power supply to the system. For more details, refer to section 5.4.1.
(Do not power on the system at this point.)
b) Insert an SD memory card.
c) Power on the system.
d) The LED4 lamp lights if the read and write operations are successfully completed. If the LED4 lamp continues blinking or does not light, the SD memory card cannot be read or written to by the FTC controller.

(7) Make sure to follow the instruction and the requirement of the SD memory card's manufacturer.
(8) Format the SD memory card if determined unreadable in step (6). This could make it readable.
Download an SD card formatter from the following site.
SD Association homepage: https://www.sdcard.org/home/
(9) FTC supports FAT file system but not NTFS file system.
(10) Mitsubishi Electric is not liable for any damages, in whole or in part, including failure of writing to an SD memory card, and corruption and loss of the saved data, or the like. Back up saved data as necessary.
(11) Do not touch any electronic parts on the FTC control board when inserting or ejecting an SD memory card, or else the control board could fail.

| Logos |
|---|
| |
| **Capacities** |
| 2 GB to 32 GB *2 |
| **SD speed classes** |
| All |

• The SD Logo is a trademark of SD-3C, LLC.
The miniSD logo is a trademark of SD-3C, LLC.
The microSD logo is a trademark of SD-3C, LLC.

*2 A 2-GB SD memory card stores up to 30 days of operation logs.

## 5.4.6 DHW tank for Hydrobox

### ■ Installation procedure for DHW tank

**Notes:**

- **Be aware that the respective DHW operations are greatly effected by the selections of the components such as tank, immersion heater, or the like.**
- **Follow your local regulations to perform system configuration.**

1. To enable switching of the water circulation circuit between the DHW mode and the heating mode, install a 3-way valve (local supply).
   The use of two 2-way valves can perform the same function as a 3-way valve.
2. Install the optional thermistor THW5B (optional part PAC-TH011TK2-E/PAC-TH011TKL2-E) on the DHW tank.
   It is recommended to position the thermistor at the mid point of the DHW tank capacity. Insulate thermistor from ambient air. Especially for double (insulated) tank, thermistor should be attached to the inner side (to detect the water temperature).
3. Connect the thermistor lead to the CNW5 connector on the FTC. If the thermistor lead is too long bundle it with a strap to adjust the length.
4. The output terminals for the 3-way valve is TBO.2 5-6 (OUT4).
   Choose the terminals that the 3-way valve is connected to between TBO.2 5-6, or TBO.2 4-6, according to the rated voltage.
   When the rated current of the 3-way valve exceeds 0.1A, be sure to use a relay with maximum voltage and current ratings of 230 V AC / 0.1 A when connecting to the FTC. Do not directly connect the 3-way valve cable to the FTC. Connect the relay cable to the TBO.2 5-6 terminals.
   3-way valve must be of SPST type. SPDT type can NOT be used. For systems using 2-way valves instead of a 3-way valve please read the following;

| | Installation position | Electrical connection terminal block | Output signal | | |
|---|---|---|---|---|---|
| | | | Heating | DHW | System OFF |
| 2-way valve1 | DHW | TBO.2 5-6 | OFF (closed) | ON (open) | OFF (closed) |
| 2-way valve2 | Heating | TBO.4 3-4 | ON (open) | OFF (closed) | OFF (closed) |

Notes:
Should the 2-way valve become blocked the water circulation will stop.
A bypass valve or circuit should be installed between pump and 2-way valve for safety.
The TBO.4 3-4 terminals on the FTC are shown in the wiring diagram.
The 2-way valve (local supply) should be installed according to the instructions supplied with it. Follow 2-way valve's manufacturer's instructions as to whether to connect an earth cable or not.

- For the 2-way valve, choose the one that slowly opens and shuts off to prevent water hammer sound.
- Choose the 2-way valve equipped with manual override, which is necessary for topping up or draining of water.

5. Turn the DIP SW1-3 on the FTC to ON.
6. When using an immersion heater (local supply), connect a contact relay cable for the immersion heater to TBO.4 5-6 (OUT9), and turn the DIP SW1-4 to ON. Do NOT directly connect the power cable to the FTC.

Notes:

- When an immersion heater is installed, select appropriate breaker capacity and a cable with appropriate diameter on the basis of heater output.
- When wiring an immersion heater in the field, always install an earth leakage breaker to prevent accidental electric shock.

**Specification of 2-way valve (local supply)**

- Power supply: 230 V AC
- Current: 0.1 A Max. **(If over 0.1 A you must use a relay)**
- Type: Normally closed

⚠ **WARNING: When connecting DHW tank**

**(1) Attach the optional thermistor THW5B (PAC-TH011TK2-E/PAC-TH011TKL2-E).**
**(2) Always use earth leakage breaker when connecting immersion heater.**
**(3) When installing an immersion heater, be sure that the immersion heater has a built-in direct cut-off thermostat.**
**(4) Connect a pressure relief valve on the sanitary water side.**
**(5) It is essential that no check valve or isolating valve is fitted between the hydrobox and the pressure relief valve.**

**Recommended DHW system**

Where system involves a DHW tank:

| DHW tank | Immersion heater | Booster heater | BH function | System diagram | Thermistor |
|---|---|---|---|---|---|
| Present | Absent | Present | For space heating/ cooling and DHW | 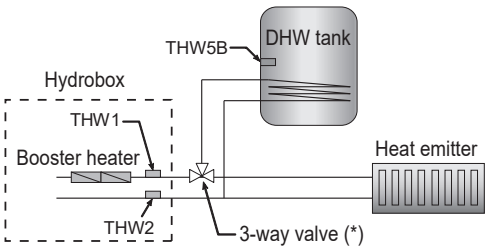 | THW1: Flow water temp.<br>THW2: Return water temp.<br>THW5B: Tank water temp.<br>(optional part PAC-TH011TK2-E/ PAC-TH011TKL2-E) |
| Present | Present | Present | For space heating/ cooling and DHW | 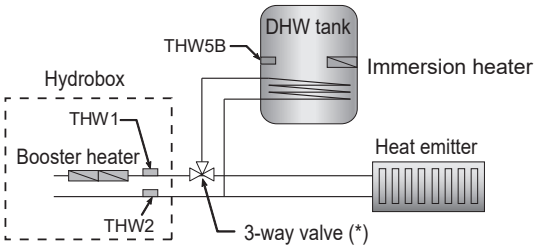 | THW1: Flow water temp.<br>THW2: Return water temp.<br>THW5B: Tank water temp.<br>(optional part PAC-TH011TK2-E/ PAC-TH011TKL2-E) |

*The use of two 2-way valves can perform same function as a 3-way valve.

## 5.5. Water circuit diagrams

### 5.5.1 Component Parts

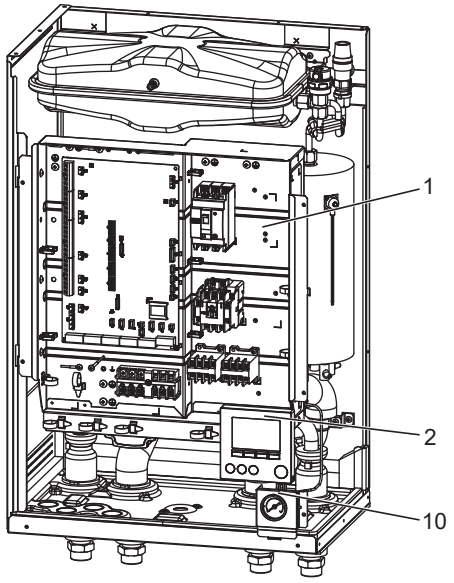


<Figure 5.5.1>

**<E*PX-*M**D> (Packaged model system)**

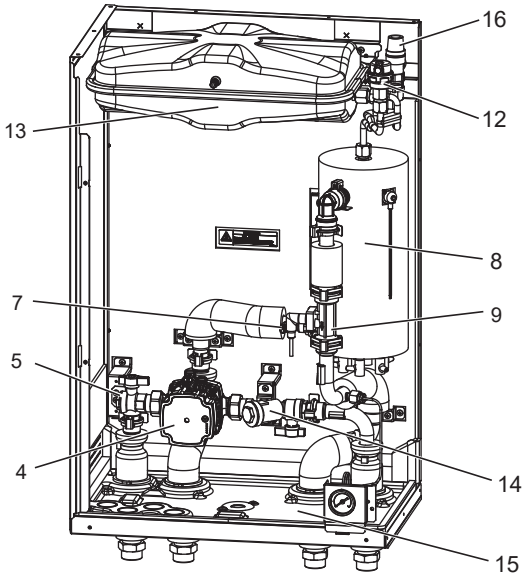


<Figure 5.5.2>

**<E*S*-*M**D> (Split model system)**

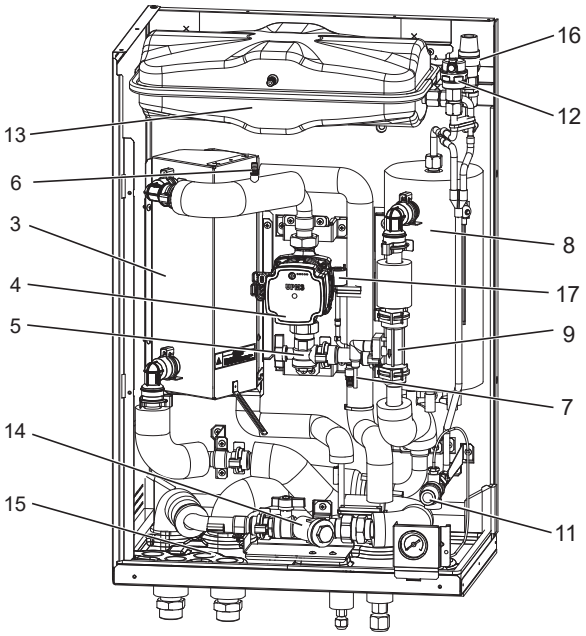


<Figure 5.5.3>

**<E*SE-*M*ED> (Split model system)**

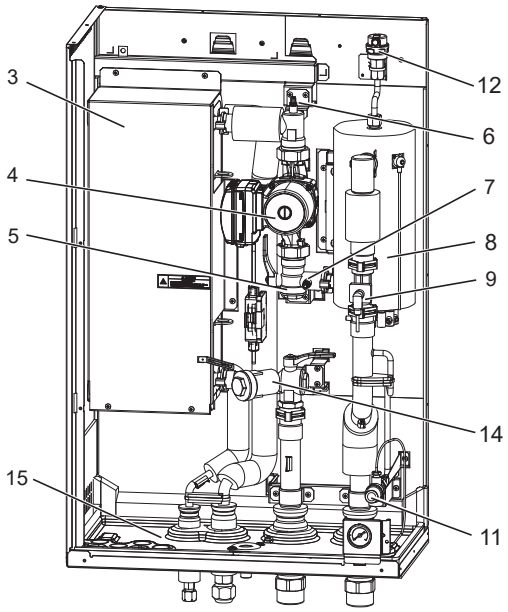


<Figure 5.5.4>

| No. | Part name | EHPX-*M*(E)D | ERPX-MD | ERPX-*M*D | EHS*-MED | EHS*-*M*D | EHS*-YM9ED | ERS*-*M*(E)D | ERS*-MED |
|---|---|---|---|---|---|---|---|---|---|
| 1 | Control and electrical box | ✔ | ✔ | ✔ | ✔ | ✔ | ✔ | ✔ | ✔ |
| 2 | Main remote controller | ✔ | ✔ | ✔ | ✔ | ✔ | ✔ | ✔ | ✔ |
| 3 | Plate heat exchanger (Refrigerant - Water) | – | – | – | ✔ | ✔ | ✔ | ✔ | ✔ |
| 4 | Water circulation pump 1 | ✔ | ✔ | ✔ | ✔ | ✔ | ✔ | ✔ | ✔ |
| 5 | Pump valve | ✔ | ✔ | ✔ | ✔ | ✔ | ✔ | ✔ | ✔ |
| 6 | Air vent (manual) | – | – | – | ✔ | ✔ | ✔ | ✔ | ✔ |
| 7 | Drain cock (Primary circuit) | ✔ | – | ✔ | ✔ | ✔ | ✔ | ✔ | ✔ |
| 8 | Booster heater 1,2 | ✔ | – | ✔ | – | ✔ | ✔ | ✔ | – |
| 9 | Flow sensor | ✔ | ✔ | ✔ | ✔ | ✔ | ✔ | ✔ | ✔ |
| 10 | Manometer | ✔ | ✔ | ✔ | ✔ | ✔ | ✔ | ✔ | ✔ |
| 11 | Pressure relief valve (3 bar) | – | – | – | ✔ | ✔ | ✔ | ✔ | ✔ |
| 12 | Automatic air vent | ✔ | ✔ | ✔ | ✔ | ✔ | ✔ | ✔ | ✔ |
| 13 | Expansion vessel | ✔ *1 | ✔ | ✔ | – | ✔ | – | ✔ *2 | – |
| 14 | Strainer valve | ✔ | ✔ | ✔ | ✔ | ✔ | ✔ | ✔ | ✔ |
| 15 | Drain pan | – | ✔ | ✔ | – | – | – | ✔ | ✔ |
| 16 | Pressure relief valve (5 bar) | ✔ *1 | ✔ | ✔ | – | ✔ | – | ✔ *2 | – |
| 17 | Pressure sensor | – | – | – | ✔ *3 | ✔ *3 | ✔ *3 | ✔ *3 | ✔ *3 |

<Table 5.5.1>

**Note:**
**For installation of all E***-*M*ED models, make sure to install a suitably sized primary-side expansion vessel. (See figure 5.5.1 ~ 5.5.6 and 5.6.17 for further guidance)**

*1 EHPX-YM9ED and EHPX-MED are not included.
*2 ERSE-YM9ED is not included.
*3 Only 2HP (E*SD) model.

## 5.5.2 Circuit diagram

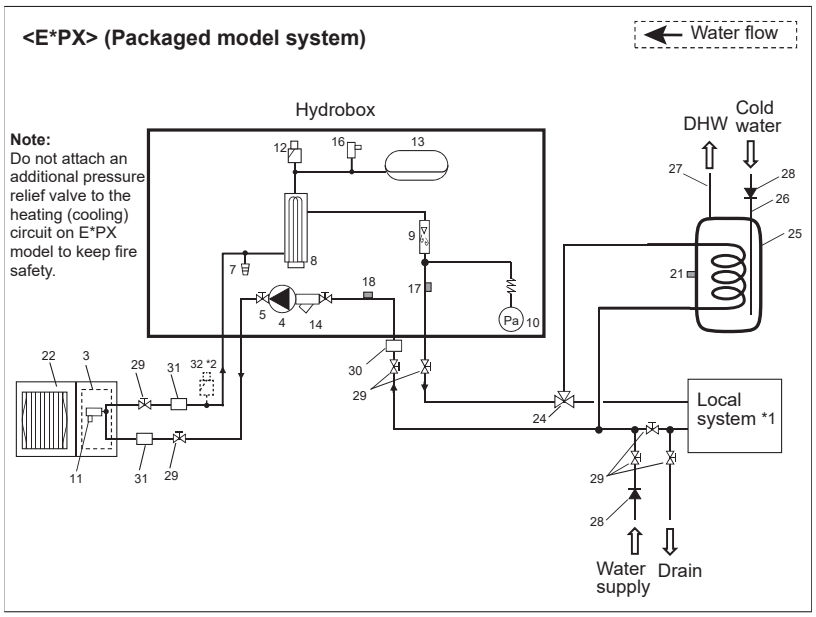


<Figure 5.5.5>

| No. | Part name | EHPX-*M*(E)D | ERPX-MD | ERPX-*M*D | EHS*-MED | EHS*-*M*D | EHS*-YM9ED | ERS*-*M*(E)D | ERS*-MED |
|---|---|---|---|---|---|---|---|---|---|
| 1 | Control and electrical box | ✓ | ✓ | ✓ | ✓ | ✓ | ✓ | ✓ | ✓ |
| 2 | Main remote controller | ✓ | ✓ | ✓ | ✓ | ✓ | ✓ | ✓ | ✓ |
| 3 | Plate heat exchanger (Refrigerant - Water) | – | – | – | ✓ | ✓ | ✓ | ✓ | ✓ |
| 4 | Water circulation pump 1 | ✓ | ✓ | ✓ | ✓ | ✓ | ✓ | ✓ | ✓ |
| 5 | Pump valve | ✓ | ✓ | ✓ | ✓ | ✓ | ✓ | ✓ | ✓ |
| 6 | Air vent (manual) | – | – | – | ✓ | ✓ | ✓ | ✓ | ✓ |
| 7 | Drain cock (Primary circuit) | ✓ | – | ✓ | ✓ | ✓ | ✓ | ✓ | ✓ |
| 8 | Booster heater 1, 2 | ✓ | – | ✓ | – | ✓ | ✓ | ✓ | – |
| 9 | Flow sensor | ✓ | ✓ | ✓ | ✓ | ✓ | ✓ | ✓ | ✓ |
| 10 | Manometer | ✓ | ✓ | ✓ | ✓ | ✓ | ✓ | ✓ | ✓ |
| 11 | Pressure relief valve (3 bar) | – | – | – | ✓ | ✓ | ✓ | ✓ | ✓ |
| 12 | Automatic air vent | ✓ | ✓ | ✓ | ✓ | ✓ | ✓ | ✓ | ✓ |
| 13 | Expansion vessel | ✓ *3 | ✓ | ✓ | – | ✓ | – | ✓ *4 | – |
| 14 | Strainer valve | ✓ | ✓ | ✓ | ✓ | ✓ | ✓ | ✓ | ✓ |
| 15 | Drain pan | – | ✓ | ✓ | – | – | – | ✓ | ✓ |
| 16 | Pressure relief valve (5 bar) | ✓ *3 | ✓ | ✓ | – | ✓ | – | ✓ *4 | – |
| 17 | THW1 | ✓ | ✓ | ✓ | ✓ | ✓ | ✓ | ✓ | ✓ |
| 18 | THW2 | ✓ | ✓ | ✓ | ✓ | ✓ | ✓ | ✓ | ✓ |
| 19 | TH2 | – | – | – | ✓ | ✓ | ✓ | ✓ | ✓ |
| 20 | Pressure sensor | – | – | – | ✓ *5 | ✓ *5 | ✓ *5 | ✓ *5 | ✓ *5 |
| 21 | THW5B (Optional part PAC-TH011TK2-E or PAC-TH011TKL2-E) | – | – | – | – | – | – | – | – |
| 22 | Outdoor unit | – | – | – | – | – | – | – | – |
| 23 | Drain pipe (Local supply) | – | – | – | – | – | – | – | – |
| 24 | 3-way valve (Local supply) | – | – | – | – | – | – | – | – |
| 25 | DHW indirect unvented tank (Local supply) | – | – | – | – | – | – | – | – |
| 26 | Cold water inlet pipe (Local supply) | – | – | – | – | – | – | – | – |
| 27 | DHW outlet pipe (Local supply) | – | – | – | – | – | – | – | – |
| 28 | Back flow prevention device (Local supply) | – | – | – | – | – | – | – | – |
| 29 | Isolating valve (Local supply) | – | – | – | – | – | – | – | – |
| 30 | Magnetic filter (Local supply) (Recommended) | – | – | – | – | – | – | – | – |
| 31 | Strainer (Local supply) | – | – | – | – | – | – | – | – |
| 32 | Air vent (Local supply) | – | – | – | – | – | – | – | – |

<Table 5.5.2>

*1 Refer to the following section [Local system].
*2 If the outdoor unit is higher than the indoor unit, or if there is a location where air gets trapped in the upper part of the water pipe, consider adding this part.
*3 EHPX-YM9ED and EHPX-MED are not included.
*4 ERSE-YM9ED is not included.
*5 Only 2HP(E*SD) model.

Note
- Be sure to follow your local regulations to perform system configuration of the DHW connections.
- DHW connections are not included in the hydrobox package. All required parts are to be sourced locally.
- To enable draining of the hydrobox an isolating valve should be positioned on both the inlet and outlet pipework.
- Be sure to install a strainer on the inlet pipe work to the hydrobox.
- Suitable drain pipework should be attached to the relief valves instructed to be connected to it in Figure 5.5.5 in accordance with your country's regulations.
- A backflow prevention device must be installed on water supply pipework (IEC 61770).
- When using components made from different metals or connecting pipes made of different metals insulate the joints to prevent a corrosive reaction taking place which will damage the pipework.

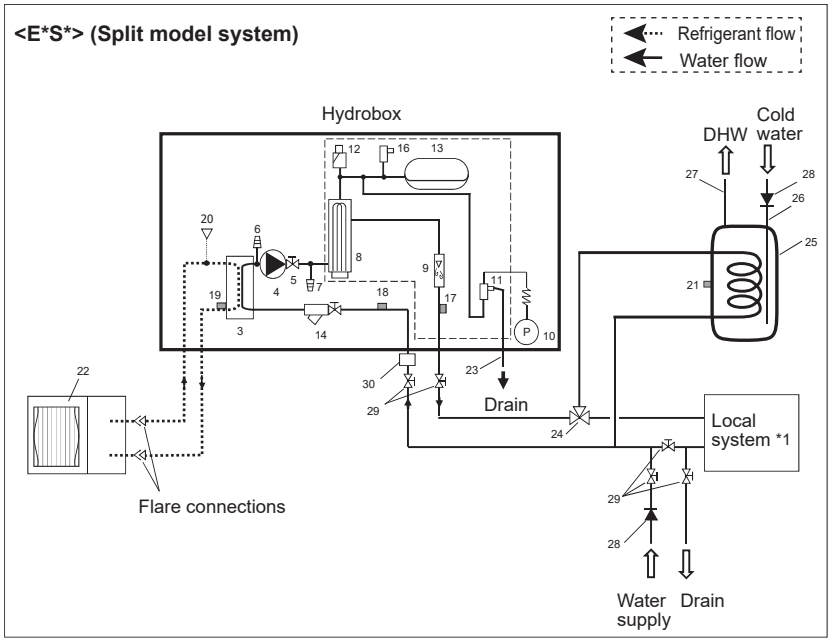


<Figure 5.5.6>

<E*SE only>

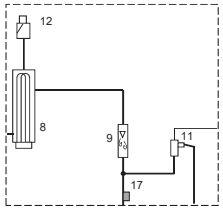

### 5.5.3 Local system

#### 1-zone temperature control

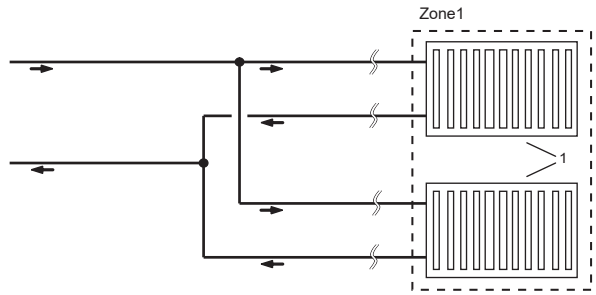


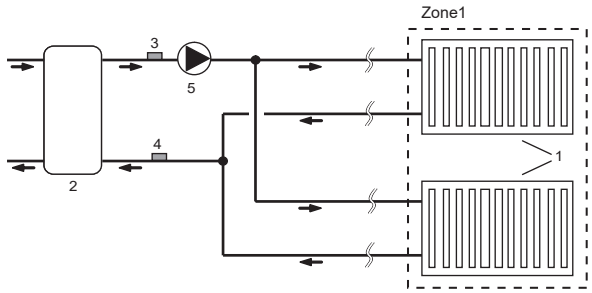


#### 2-zone temperature control

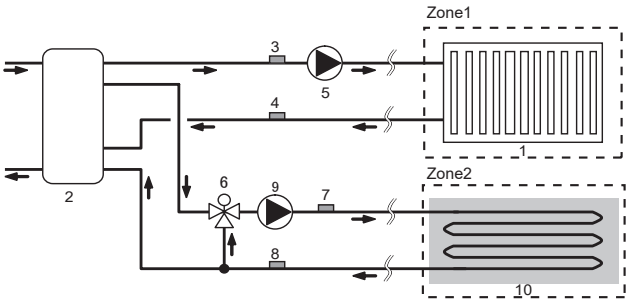


#### 1-zone temperature control with boiler

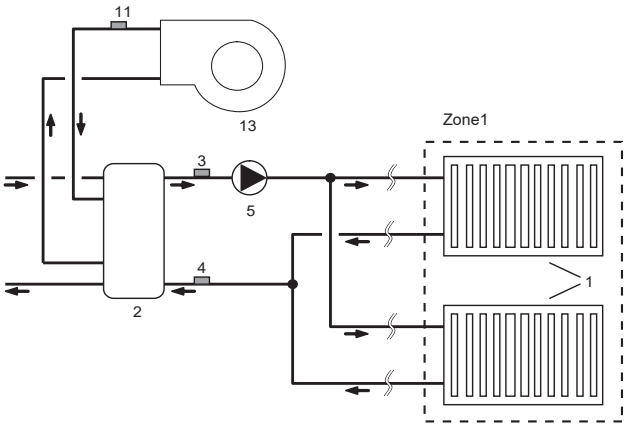


#### 2-zone temperature control & Buffer tank control

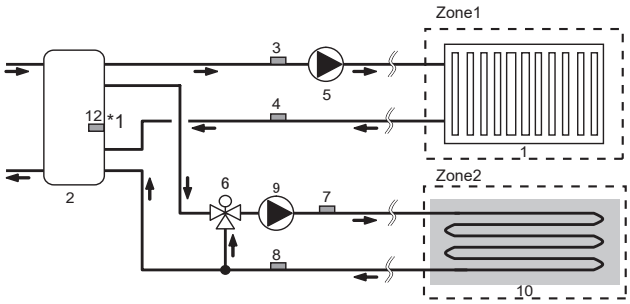


#### 1-zone temperature control (2-zone valve ON/OFF control)

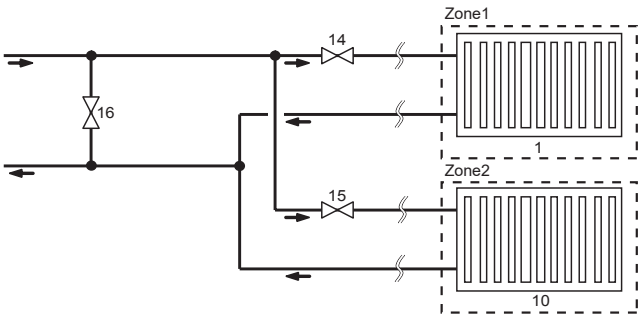


1. Zone1 heat emitters (e.g. radiator, fan coil unit) (local supply)
2. Mixing tank (local supply)
3. Zone1 flow water temp. thermistor (THW6) } Optional part : PAC-TH011-E
4. Zone1 return water temp. thermistor (THW7)
5. Zone1 water circulation pump (local supply)
6. Motorized mixing valve (local supply)
7. Zone2 flow water temp. thermistor (THW8) } Optional part : PAC-TH011-E
8. Zone2 return water temp. thermistor (THW9)
9. Zone2 water circulation pump (local supply)
10. Zone2 heat emitters (e.g. underfloor heating) (local supply)
11. Boiler flow water temp. thermistor (THWB1) } Optional part : PAC-TH012HT(L)-E
12. Mixing tank thermistor (THW10) *1
13. Boiler (local supply)
14. Zone1 2-way valve (local supply)
15. Zone2 2-way valve (local supply)
16. Bypass valve (local supply)

*1 ONLY Buffer tank control (heating/cooling) applies to "Smart grid ready".

## 5.6. Installation

### <Preparation before the installation and service>

- Prepare the proper tools.
- Prepare the proper protection.
- Allow parts to cool before attempting any maintenance.
- Provide adequate ventilation.
- After stopping the operation of the system, turn off the power-supply breaker and remove the power plug.
- Discharge the capacitor before commencing work involving the electric parts.

### <Precautions during service>

- Do not perform work involving electric parts with wet hands.
- Do not pour water or liquid into the electric parts.
- Do not touch the refrigerant.
- Do not touch the hot or cold surfaces in the refrigerant cycle.
- When the repair or the inspection of the circuit needs to be carried out without turning off the power, exercise great caution NOT to touch any LIVE parts.



### 5.6.1 Location

#### ■ Transportation and Handling

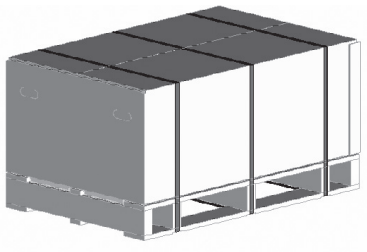

<Figure 5.6.1>

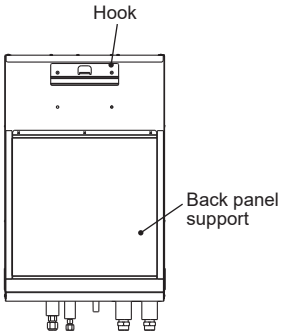


<Figure 5.6.2>

Hydrobox is delivered on a wooden pallet base with cardboard protection.

Care should be taken when transporting the hydrobox so that the casing is not damaged by impact. Do not remove the protective packaging until hydrobox has reached its final location. This will help protect the structure and control panel.

**Notes:**
- **The hydrobox should ALWAYS be moved by a minimum of 2 people.**
- **Do NOT hold piping when moving or lifting the hydrobox.**

#### ■ Suitable Location

Before installation the hydrobox should be stored in a frost-free weather-proof location. Units must **NOT** be stacked.

- The hydrobox should be installed indoors in a frost free weather proof location.
- Install the hydrobox where it is not exposed to water/excessive moisture.
- The hydrobox should be positioned on a level wall capable of supporting it's filled weight.
- To find out the weight, refer to "2. Specifications".
- Care should be taken that minimum distances around and in front of the unit for service access are observed <Figure 5.6.3>.
- Secure the hydrobox to prevent it being knocked over.
- The hook and panel supports should be used to fix the hydrobox to the wall. <Fig. 5.6.2>

#### ■ Service access diagrams

| Service access | |
|---|---|
| Parameter | Dimension (mm) |
| a | 200 |
| b | 150 |
| c | 500 |
| d | 500 |

<Table 5.6.1>

Sufficient space MUST be left for the provision of discharge pipework as detailed in National and Local building regulations.

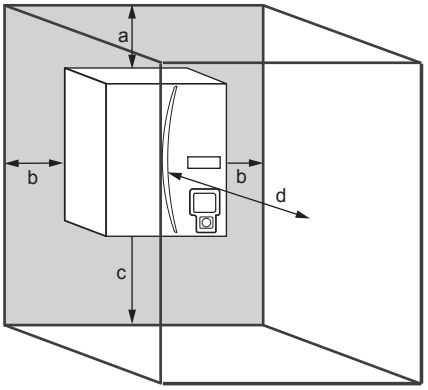


<Figure 5.6.3>
Service access

The hydrobox must be located indoors and in a frost-free environment, for example in a utility room.

#### ■ Repositioning hydrobox

If you need to move the hydrobox to a new position FULLY DRAIN it before moving to avoid damage to the unit.
**Note: Do NOT hold piping when moving or lifting the hydrobox.**

## ■ Mounting procedure

1. Install the included back plate accessory.
   * When installing the back plate, use locally-supplied screws and compatible fixing plugs.

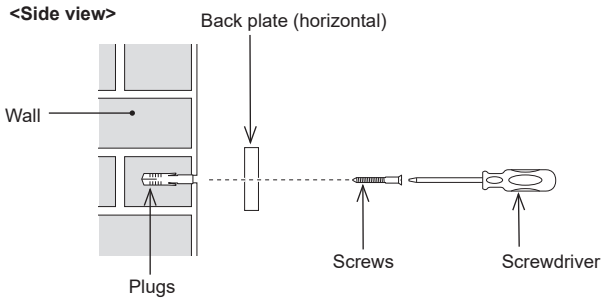


<Figure 5.6.4>

- Fit the back plate correctly with its horizontal notch profile positioned at the TOP.
  The back plate is provided with screw mounting holes that are round or oval.
  To prevent the unit from falling off the wall, choose the appropriate number of holes or hole positions and horizontally secure the back plate to the appropriate wall location.

2. Insert the hook on the back of the hydrobox behind the notch of the back plate.
   *The lifting up of the hydrobox is facilitated by first tilting the unit forward using the included packaging cushioning.

   i) Each of the right and left side panels has a ▷ mark indication.
   Lift up the unit so that the ▷ marks are positioned above the top edge of the back plate as shown below.

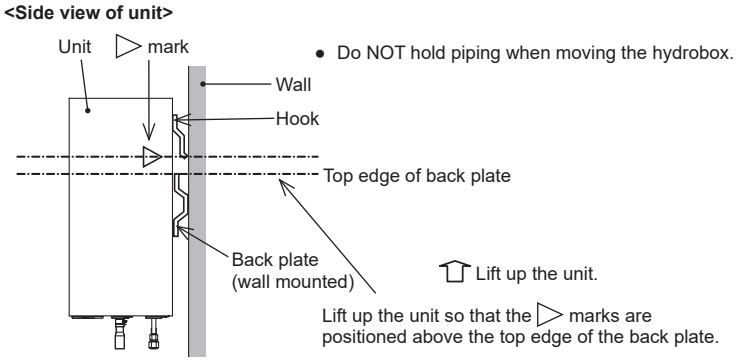


- Do NOT hold piping when moving the hydrobox.

<Figure 5.6.5>

ii) Check and ensure that the ▷ marks are positioned and properly engaged at the bent section level on the back plate as shown below.

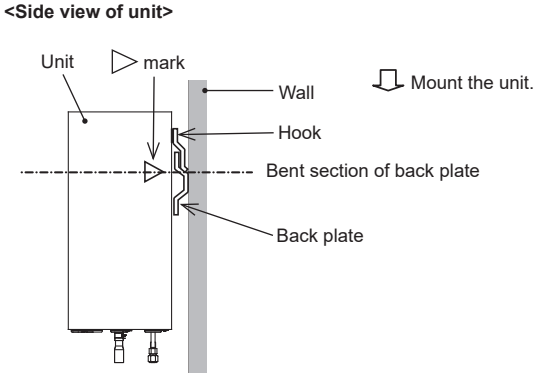


<Figure 5.6.6>

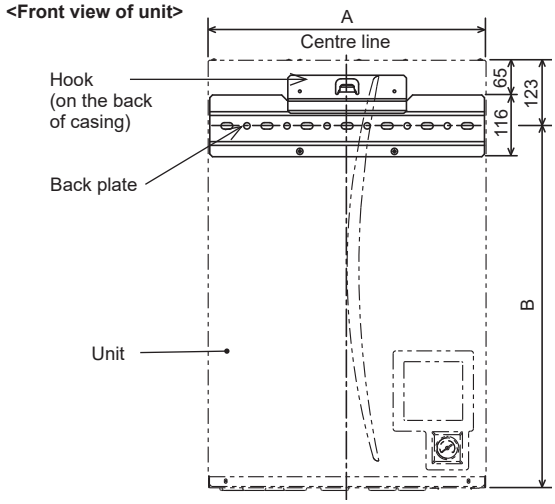


<Figure 5.6.7>

- Figure 5.6.7 shows the relative positions between the unit and the wall secured back plate.
  Referring to the <Figure 5.6.3> Service access, install the back plate.

| Dimensions (mm) / Hydro box | A | B |
|---|---|---|
| E*SC<br>E*SD<br>E*PX | 530 | 677 |
| E*SE | 600 | 827 |

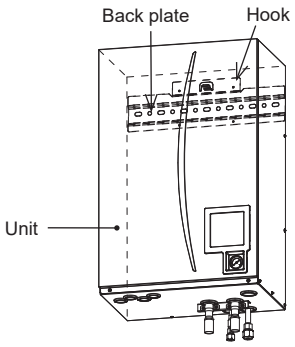


<Figure 5.6.8>

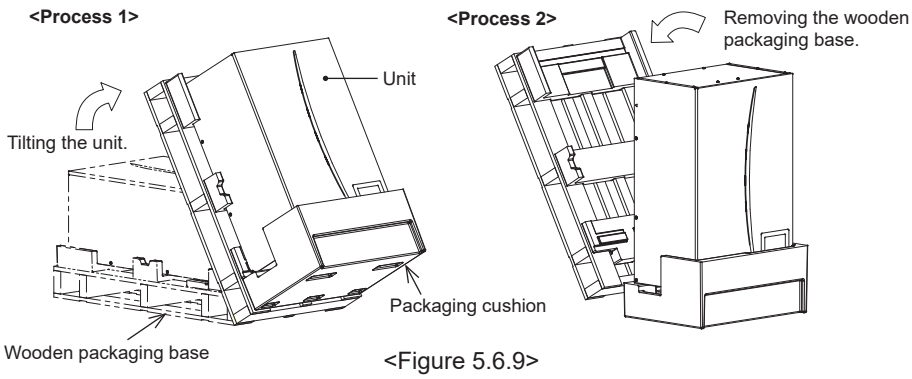


<Figure 5.6.9>

3. Referring to "How to access Internal Components and Control and Electrical Box", fix the unit to the back plate using the included 2 screws (accessory items).

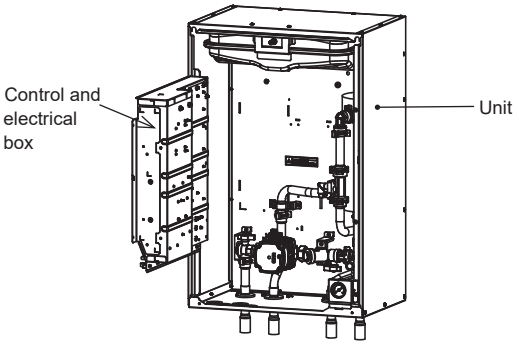


<Figure 5.6.10>

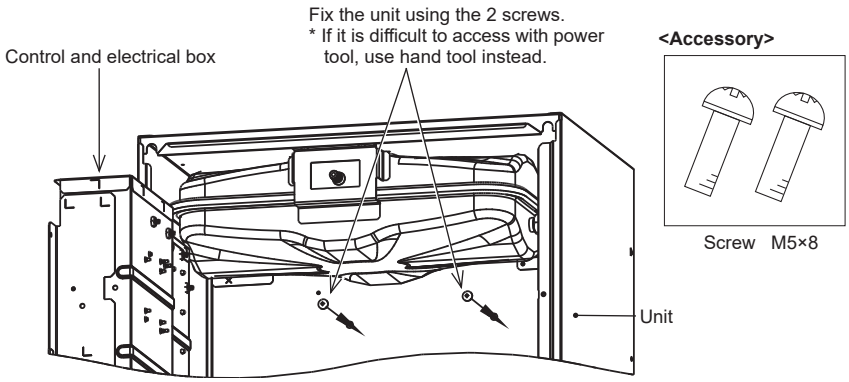


<Figure 5.6.11>

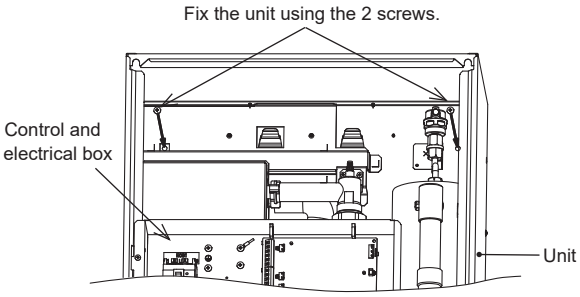


<Figure 5.6.12>

CAUTION: BEFORE performing field piping, be sure to fit and tighten these two screws. Otherwise, the hook could be disengaged, and the unit could fall down.

## 5.6.2 Water Quality and System Preparation

### ■ General

- The water in both primary and sanitary circuit should be clean and with pH value of 6.5-8.0.
- The followings are the maximum values;
  Calcium: 100 mg/L, Ca hardness: 250 mg/L
  Chlorine: 100 mg/L, Copper: 0.3 mg/L
- Other constituents should be to European Directive 98/83 EC standards.l
- In known hard water areas, to prevent/minimise scaling, it is beneficial to restrict the routine stored water temperature (DHW max. temp.) to 55°C.

### ■ Anti-Freeze

Anti-freeze solutions should use propylene glycol with a toxicity rating of Class 1 as listed in Clinical Toxicology of Commercial Products, 5th Edition.

**Notes:**

**1. Ethylene glycol is toxic and should NOT be used in the primary water circuit in case of any cross-contamination of the potable circuit.**

**2. For 2-zone valve ON/OFF control, propylene glycol should be used.**

### ■ New Installation (primary water circuit)

- Before connecting outdoor unit, thoroughly cleanse pipework of building debris, solder etc using a suitable chemical cleansing agent.
- Flush the system to remove chemical cleanser.
- For all packaged model systems, and the split model or PUMY system without booster heater, add a combined inhibitor and anti-freeze solution to prevent damage to the pipework and system components.
- For split model systems the responsible installer should decide if anti-freeze solution is necessary for each site's conditions. Corrosion inhibitor however should ALWAYS be used.

### ■ Existing Installation (primary water circuit)

- Before connecting outdoor unit the existing heating circuit MUST be chemically cleansed to remove existing debris from the heating circuit.
- Flush the system to remove chemical cleanser.
- For all packaged model systems add a combined inhibitor and anti-freeze solution to prevent damage to the pipework and system components.
- For split model systems the responsible installer should decide if anti-freeze solution is necessary for each site's conditions. Corrosion inhibitor however should ALWAYS be used.

When using chemical cleansers and inhibitors always follow manufacturer's instructions and ensure the product is appropriate for the materials used in the water circuit

### ■ Minimum amount of water required in the space heating/cooling circuit

| Outdoor heat pump unit | | Indoor unit containing water amount [L] | *Additional required water amount [L] | |
|---|---|---|---|---|
| | | | Average / Warmer climate** | Colder climate** |
| Packaged model | PUZ-WM50 | 5 | 2 | 24 |
| | PUZ-WM60 | | 4 | 29 |
| | PUZ-WM85 | | 7 | 32 |
| | PUZ-WM112 | | 11 | 43 |
| | PUZ-HWM140 | | 15 | 55 |
| Split model SUZ series | SUZ-SWM40VA | 5 | 1 | 12 |
| | SUZ-SWM60VA | | 2 | 21 |
| | SUZ-SWM80VA | | 4 | 29 |
| | SUZ-SWM30VA | | 5 *** | 12 *** |
| | SUZ-SWM40VA2(-SC) | | 5 *** | 12 *** |
| | SUZ-SWM60VA2(-SC) | | 9 *** | 21 *** |
| | SUZ-SWM80VA(H)2 | | 12 *** | 29 *** |
| | SUZ-SWM100VA(H) | | 12 *** | 38 *** |
| | SUZ-SHWM30VAH | | 9 *** | 21 *** |
| | SUZ-SHWM40VAH(-SC) | | 9 *** | 21 *** |
| | SUZ-SHWM60VAH(-SC) | | 12 *** | 29 *** |
| Split model PUD series | PUD-S(H)WM60 | 5 | 4 | 21 |
| | PUD-S(H)WM80 | | 6 | 29 |
| | PUD-S(H)WM100 | | 10 | 38 |
| | PUD-S(H)WM120 | | 12 | 47 |
| | PUD-SHWM140 | | 15 | 55 |
| Split model PUZ series | PUZ-S(H)WM60 | 5 | 4 | 21 |
| | PUZ-S(H)WM80 | | 6 | 29 |
| | PUZ-S(H)WM100 | | 9 | 38 |
| | PUZ-S(H)WM120 | | 12 | 47 |
| | PUZ-S(H)WM140 | | 15 | 55 |
| Split model PUHZ series | PUHZ-SW75 | 5 | 6 | 37 |
| | PUHZ-SW100 | | 9 | 38 |
| | PUHZ-SW120 | | 12 | 47 |
| | PUHZ-SW160 | | 18 | 64 |
| | PUHZ-SW200 | | 24 | 81 |
| | PUHZ-SHW80 | | 6 | 29 |
| | PUHZ-SHW112 | | 11 | 43 |
| | PUHZ-SHW140 | | 15 | 55 |
| | PUHZ-SHW230 | | 28 | 94 |
| Split model Multi series | PUHZ-FRP71 | 5 | 6 | 27 |
| | PUMY-P112 | | 22 | 75 |
| | PUMY-P125 | | 22 | 75 |
| | PUMY-P140 | | 22 | 75 |
| | PXZ-4F75VG | | 6 | 27 |
| | PXZ-5F85VG | | 6 | 29 |

<Table 5.6.2>

* Water amount: If there is a bypass circuit, above table means minimum water amount in case of bypass.

** Climate: Please refer to 2009/125/EC: Energy-related Products Directive and Regulation (EU) No 813/2013 to confirm your climate zone.

*** SUZ series: Flow temperature MUST always be NO lower than 32 °C when outdoor temperature drops below -15 °C.
Potential risks of plate HEX get frozen and damaged, and also outdoor HEX would be frosted due to insufficient defrosting.

Case 1. No division between primary and secondary circuit

- Please ensure the required water amount according to the table 5.6.2 by water pipe and radiator or underfloor heating.

Case 2. Separate primary and secondary circuit

- If the interlock operation of primary and secondary pump is not available, please ensure required additional water in only primary circuit according to the table 5.6.2.
- If the interlock operation of primary and secondary pump is available, please ensure total water amount of primary and secondary circuit according to the table 5.6.2.
  In case of the shortage of required water amount, please install buffer tank.

### 5.6.3 Water Pipe Work

**Note: Prevent the field piping from straining the piping on the hydrobox by fixing it to a wall or applying other methods.**

## ■ Hot Water Pipework

The function of the following safety components of the hydrobox should be checked on installation for any abnormalities;
- Pressure relief valve
- Expansion vessel pre-charge (gas charge pressure)

The instruction on the following pages regarding safe discharge of hot water from Safety devices should be followed carefully.
- The pipework will become very hot, so should be insulated to prevent burns.
- When connecting pipework, ensure that no foreign objects such as debris or the like enter the pipe.

## ■ Safety Device Connections

The hydrobox contains a pressure relief valve. (see <Figure 5.6.13>) The connection size is G1/2" female. The installer MUST responsibly connect appropriate discharge pipework from this valve in accordance with local and national regulations.
Failure to do so will result in discharge from the pressure relief valve directly into the hydrobox and cause serious damage to the product.

All pipework used should be capable of withstanding discharge of hot water. Relief valves should NOT be used for any other purpose, and their discharges should terminate in a safe and appropriate manner in accordance with local regulation requirements.

**Note: Beware that the manometer and the pressure relief valve are NOT strained on its capillary side and on its inlet side respectively. If a pressure relief valve is added, it is essential that no check valve or isolation valve is fitted between the hydrobox connection and the added pressure relief valve (safety matter).**

## ■ Hydraulic Filter Work (ONLY E*PX series)

Install a hydraulic filter or strainer (local supply) at the water intake ("Pipe E" in Table 5.1.1, also see associated schematic Fig. 5.5.5)

## ■ Pipework Connections

Connections to the hydrobox should be made using the 28mm compression (ERSD/ERSC/ERPX series) or the G1 nut (ERSD/ERSC/ERPX series) the G1-1/2 nut (E*SE series) as appropriate. (The hydrobox has G1 or G1-1/2 (male) thread connections.)
Do not over-tighten compression fittings as this will lead to deformation of the olive ring and potential leaks.

**Note: <u>Before</u> brazing pipes in the field, protect pipes on the hydrobox using wet towels etc as "heat shield".**
**Use two wrenches to tighten piping connection (see <Figure 5.6.14>).**

## ■ Drain Pipework (ONLY ER series)

The drain pipe should be installed to drain condensing water in Cooling mode.
- Securely install the drain pipe to prevent leakage from the connection.
- Securely insulate the drain pipe to prevent water dripping from the locally supplied drain pipe.
- Install the drain pipe at a down slope of 1/100 or more.
- Do not place the drain pipe in drain channel where sulphuric gas exists.
- After installation, check that the drain pipe drains water properly from the outlet of the pipe.

<Installation>
1. Apply polyvinyl chloride type adhesive over the shaded surfaces inside of the drain pipe and on the exterior of the drain socket as shown.
2. Insert the drain socket deeply into the drain pipe <Figure 5.6.15>.

**Note: Securely support the locally supplied drain pipe using pipe support to avoid the drain pipe falling from the drain socket.**
**To prevent dirty water from draining directly onto the floor next to hydrobox, please connect appropriate discharge pipework from the hydrobox.**

## ■ Insulation of Pipework

- All exposed water pipework should be insulated to prevent unnecessary heat loss and condensation. To prevent condensate entering the hydrobox, the pipework and connections at the top of the hydrobox should be carefully insulated.
- Cold and hot water pipework should not be run close together where possible, to avoid unwanted heat transfer.
- Pipework between outdoor heat pump unit and hydrobox should be insulated with suitable pipe insulation material with a thermal conductivity of ≤ 0.04 W/m.K.

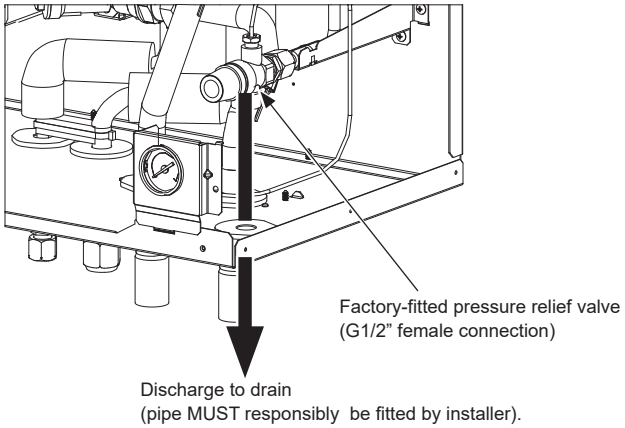


<Figure 5.6.13>

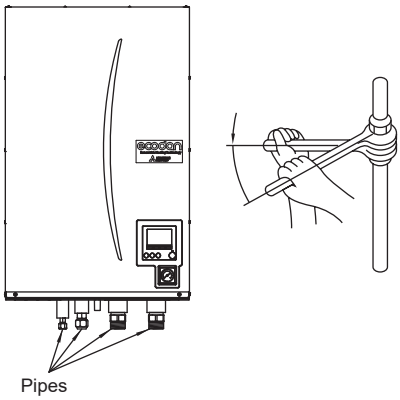


<Figure 5.6.14>

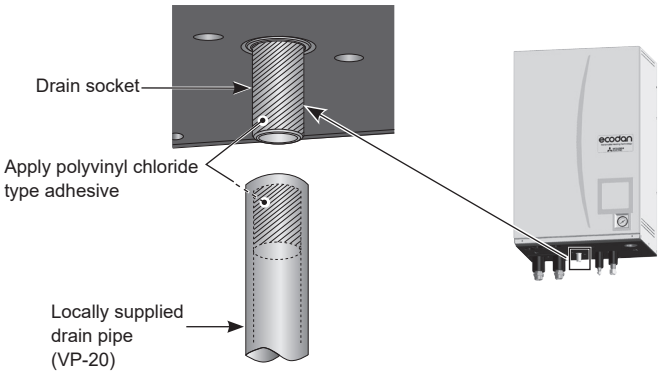


<Figure 5.6.15>

## 5.6.4 Water Circulation Pump Characteristics

Pump speed can be selected by main remote controller setting (see <Figure 5.6.16>).
Adjust the pump speed setting so that the flow rate in the primary circuit is appropriate for the outdoor unit installed (see Table 5.6.3). It may be necessary to add an additional pump to the system depending on the length and lift of the primary circuit.
For outdoor unit model not listed in the <Table 5.6.3>, refer to Water flow rate range in the specification table of outdoor unit Data Book.

<Second pump >
If a second pump is required for the installation please read the following carefully.
If a second pump is used in the system it can be positioned in 2 ways.
The position of the pump influences which terminal of the FTC the signal cable should be wired to. If the additional pump(s) have current greater than 1A please use appropriate relay. Pump signal cable can either be wired to TBO.1 1-2 or CNP1 but NOT both.

Option 1 (Space heating/cooling only)
If the second pump is being used for the heating circuit only then the signal cable should be wired to TBO.1 terminals 3 and 4 (OUT2). In this position the pump can be run at a different speed to the hydrobox's in-built pump.

Option 2 (Primary circuit DHW and space heating/cooling)
If the second pump is being used in the primary circuit between the hydrobox and the outdoor unit (Package system ONLY) then the signal cable should be wired to TBO.1 terminals 1 and 2 (OUT1). In this position the pump speed **MUST** match the speed of the hydrobox's in-built pump.
**Note: Refer to 5.4.2 Connecting inputs/outputs.**

| Outdoor heat pump unit | | Water flow rate range [L/min] |
|---|---|---|
| Packaged model | PUZ-WM50 | 6.5 - 14.3 |
| | PUZ-WM60 | 8.6 - 17.2 |
| | PUZ-WM85 | 10.8 - 24.4 |
| | PUZ-WM112 | 14.4 - 32.1 |
| | PUZ-HWM140 | 17.9 - 36.9 |
| Split model SUZ series | SUZ-SWM40VA | 6.5 - 11.4 |
| | SUZ-SWM60VA | 7.2 - 17.2 |
| | SUZ-SWM80VA | 7.8 - 21.5 |
| | SUZ-SWM30VA | 6.5 - 11.4 |
| | SUZ-SWM40VA2(-SC) | 6.5 - 11.4 |
| | SUZ-SWM60VA2(-SC) | 7.2 - 17.2 |
| | SUZ-SWM80VA(H)2 | 10.9 - 21.5 |
| | SUZ-SWM100VA(H) | 10.9 - 27.2 |
| | SUZ-SHWM30VAH | 6.5 - 11.4 |
| | SUZ-SHWM40VAH(-SC) | 7.2 - 17.2 |
| | SUZ-SHWM60VAH(-SC) | 10.9 - 21.5 |
| Split model PUD series | PUD-S(H)WM60 | 9.0 - 22.9 |
| | PUD-S(H)WM80 | 9.0 - 22.9 |
| | PUD-S(H)WM100 | 14.3 - 34.4 |
| | PUD-S(H)WM120 | 14.3 - 34.4 |
| | PUD-SHWM140 | 14.3 - 34.4 |
| Split model PUZ series | PUZ-S(H)WM60 | 7.2 - 22.9 |
| | PUZ-S(H)WM80 | 7.2 - 22.9 |
| | PUZ-S(H)WM100 | 7.2 - 28.7 |
| | PUZ-S(H)WM120 | 9.0 - 34.4 |
| | PUZ-S(H)WM140 | 9.0 - 34.4 |
| Split model PUHZ series | PUHZ-SW75 | 10.2 - 22.9 |
| | PUHZ-SW100 | 14.4 - 32.1 |
| | PUHZ-SW120 | 20.1 - 36.9 |
| | PUHZ-SHW80 | 10.2 - 22.9 |
| | PUHZ-SW160 | 23.0 - 63.1 |
| | PUHZ-SW200 | 28.7 - 71.7 |
| | PUHZ-SHW112 | 14.4 - 32.1 |
| | PUHZ-SHW140 | 17.9 - 36.9 |
| | PUHZ-SHW230 | 28.7 - 65.9 |
| Split model Multi series | PUHZ-FRP71 | 11.5 - 22.9 |
| | PUMY-P112 | 17.9 - 35.8 |
| | PUMY-P125 | 17.9 - 35.8 |
| | PUMY-P140 | 17.9 - 35.8 |
| | PXZ-4F75VG | 11.5 - 21.7 |
| | PXZ-5F85VG | 11.5 - 24.6 |

<Table 5.6.3>

* If the water flow rate is less than the minimum flow rate setting of the flow sensor(default 5.0 L/min), the flow rate error will be activated.
If the water flow rate exceeds 36.9 L/min, the flow speed will be greater than 2.0 m/s, which could erode the pipes.

### Water Circulation Pump Characteristics

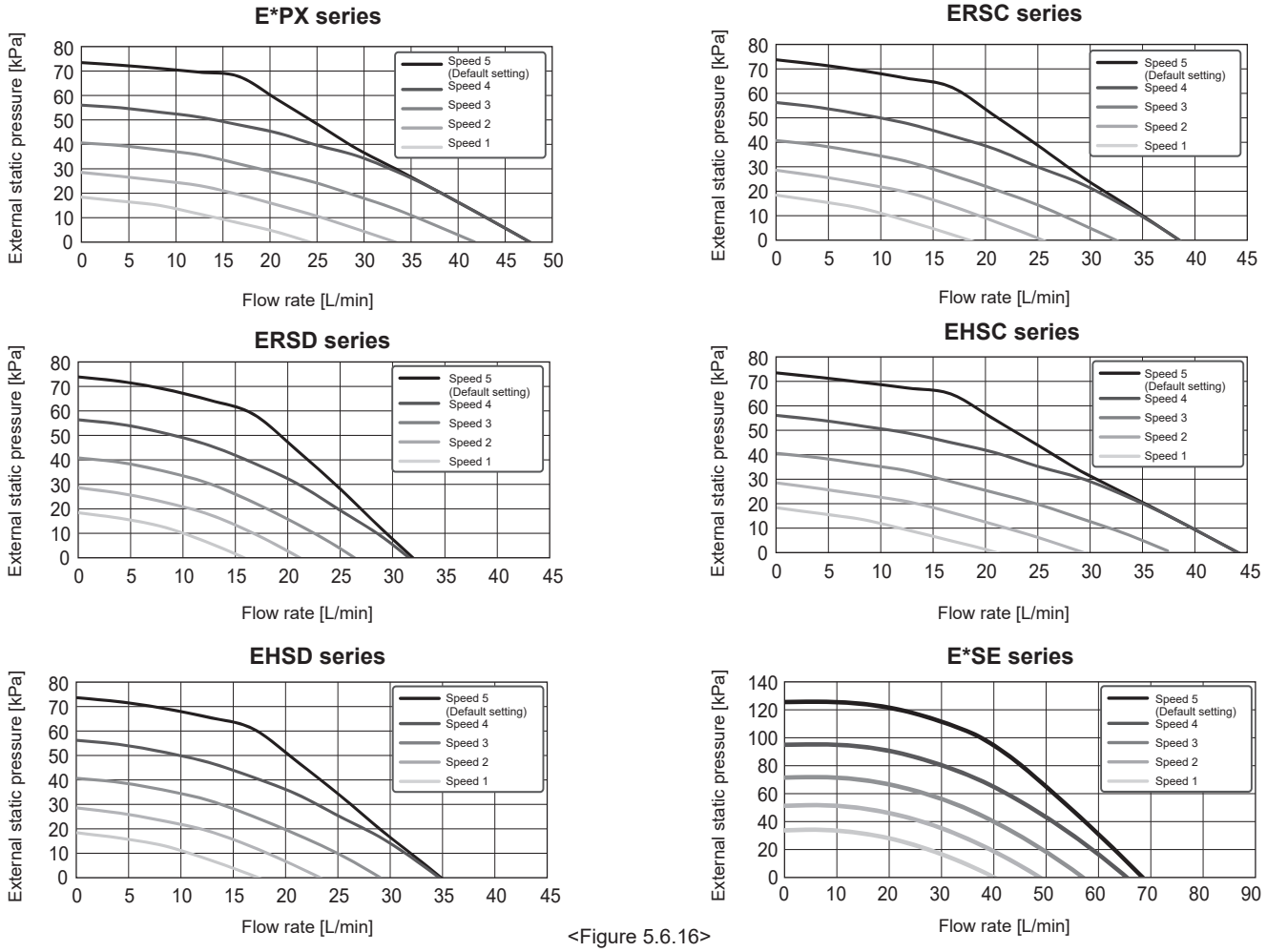


<Figure 5.6.16>

## ■ Sizing Expansion Vessels

Expansion vessel volume must fit the local system water volume.
To size an expansion vessel both for the heating and cooling circuits the following formula and graph can be used.
When the necessary expansion vessel volume exceeds the volume of an built-in expansion vessel, install an additional expansion vessel so that the sum of the volumes of the expansion vessels exceeds the necessary expansion vessel volume.

* For installation of an E***-*M*ED model, provide and install a suitable primary-side expansion vessel and additional 3 bar rated pressure relief valve in the field as the model does not come fitted with a primary-side expansion vessel.

$$V = \frac{\varepsilon \times G}{1 - \frac{P_1 + 0.098}{P_2 + 0.098}}$$

Where;
- V : Necessary expansion vessel volume [L]
- ε : Water expansion coefficient
- G : Total volume of water in the system [L]
- $P_1$ : Expansion vessel setting pressure [MPa]
- $P_2$ : Max. pressure during operation [MPa]

Graph to the right is for the following values
- ε : at 70°C = 0.0229
- $P_1$ : 0.1 MPa
- $P_2$ : 0.3 MPa

*A 30% safety margin has been added.

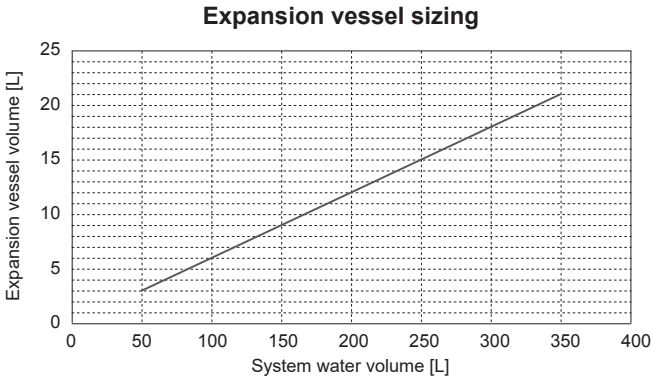


<Figure 5.6.17>

## 5.7. System Set Up

### 5.7.1 Remote Controller Options

The indoor unit comes factory fitted with a main remote controller. This incorporates a thermistor for temperature monitoring and a graphical user interface to enable set-up, view current status and input scheduling functions. The main remote controller is also used for servicing purposes. This facility is accessed via password protected service menus.

To provide the best efficiency Mitsubishi Electric recommends using automatic adaptation function based on room temperature. To use this function a room thermistor needs to be present in a main living area. This can be done in a number of ways the most convenient are detailed below.
**Refer to heating section of this manual for instructions on how to set compensation curve, Flow temp. or Room temp. (Auto adaptation).**
**For instructions on how to set the thermistor input for the FTC please refer to Initial settings section.**

> The factory setting for space heating mode is set to Room temp. (auto adaptation). If there is no room sensor present in the system, this setting must be changed to either Compensation curve mode or Flow temp. mode.

**Note: Auto-adaptation is not available in Cooling mode.**

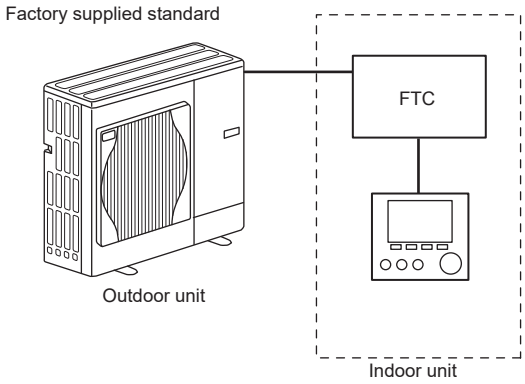


### ■ 1-zone temperature control

**Control option A**

This option features the main remote controller and the Mitsubishi Electric wireless remote controller. The wireless remote controller is used to monitor room temperature and can be used to make changes to the space heating settings, boost DHW (*1) and switch to holiday mode without having to directly use the main remote controller.

If more than one wireless remote controller is used, the most recently requested temperature setting will commonly be applied to all rooms by the central control system regardless of which wireless remote controller was used. No hierarchy exists across these remote controllers.

Wire the wireless receiver to FTC referring to the wireless remote controller instruction manual. **Turn DIP SW1-8 to ON.** Before operation configure the wireless remote controller to transmit and receive data referring to the wireless remote controller installation manual.

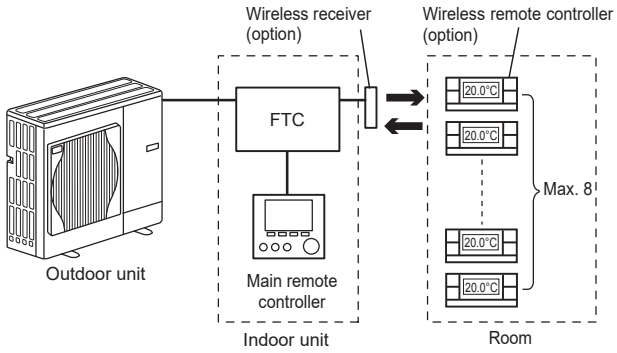


**Control option B**

This option features the main remote controller and the Mitsubishi Electric thermistor wired to FTC. The thermistor is used to monitor room temperature but can not make any changes in control operation. Any changes to DHW (*1) must be made using the main remote controller mounted on the indoor unit.

Wire the thermistor to the TH1 connector on FTC.
The number of room temperature thermistors that can be connected to FTC is always one.

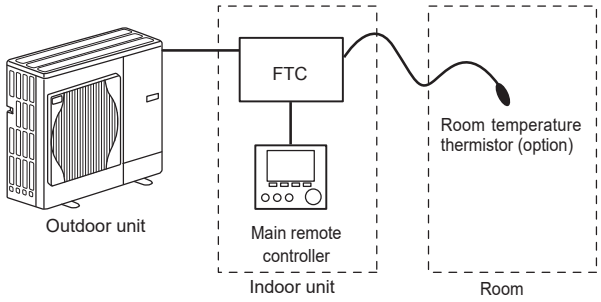


**Control option C**

This option features the main remote controller being removed from the indoor unit and situated in a different room. A thermistor built in the main remote controller can be used for monitoring the room temperature for Auto Adaptation function whilst keeping all its features of the main remote controller available.

The main remote controller and FTC are connected by a 2-core, 0.3 mm², non-polar cable (local supply) with a maximum length of 500 m.

To use the sensor in the main remote controller the main remote controller should come off from the indoor unit. Otherwise it will detect the temperature of the indoor unit instead of room temperature. This will affect the output of the space heating.

Note: Wiring for main remote controller cable shall be (5 cm or more) apart from power source wiring so that it is not influenced by electrical noise from power source wiring. (Do NOT insert main remote controller cable and power source wiring in the same conduit.)

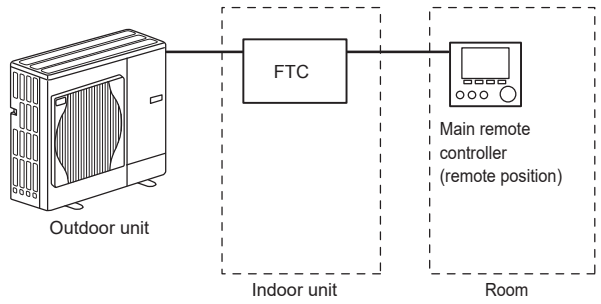


**Control option D (Flow temp. or compensation curve only)**

This option features the main remote controller and a locally supplied thermostat wired to FTC. The thermostat is used to set the maximum temperature for heating room. Any changes to DHW (*1) must be made using main remote controller mounted on the indoor unit.

The thermostat is wired to IN1 in TBI.1 on FTC. The number of thermostats that can be connected to FTC is always one.

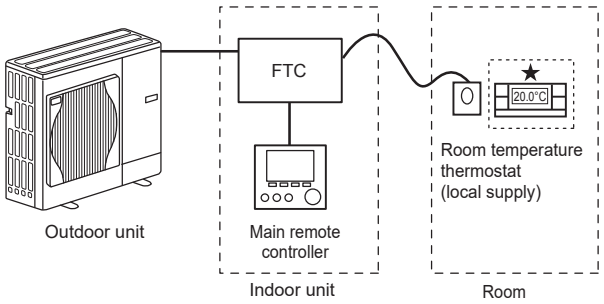


*1 If applicable
★ **The wireless remote controller can be also used as a thermostat.**

## ■ 2-zone temperature control

**Control option A**

This option features the main remote controller, the Mitsubishi Electric wireless remote controller and a locally supplied thermostat.
The wireless remote controller is used to monitor the Zone1 room temperature and the thermostat is used to monitor the Zone2 room temperature.
The thermostat can be also allocated to Zone1 and the wireless remote controller to Zone2.

The wireless remote controller can be also used to make changes to the space heating settings, boost DHW (*1) and switch to holiday mode without having to use the main remote controller.

If more than one wireless remote controller is used, the last temperature setting adjustment/demand will be applied to ALL rooms in same zone.

Wire the wireless receiver to FTC referring to the wireless remote controller instruction manual. Turn DIP SW1-8 to ON. Before operation configure the wireless remote controller to transmit and receive data referring to the wireless remote controller installation manual.
The thermostat is used to set the maximum temperature for heating Zone2 room.
The thermostat is wired to IN6 on FTC. (If the thermostat is allocated to Zone1, it is wired to IN1 on TBI.1.) (Refer to 5.4.2.)

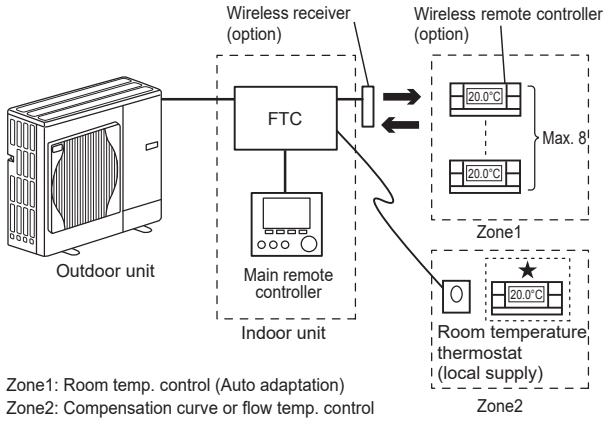


**Control option B**

This option features the main remote controller, the Mitsubishi Electric thermistor and a locally supplied thermostat that are wired to FTC.
The thermistor is used to monitor the Zone1 room temperature and the thermostat is used to control the Zone2 room temperature.

The thermostat can be also allocated to Zone1 and the thermistor to Zone2.
The thermistor can not make any changes in control operation. Any changes to DHW (*1) must be made using the main remote controller mounted on the indoor unit.
Wire the thermistor to the TH1 connector on FTC.
The number of room temperature thermistors that can be connected to FTC is always one.
The thermostat is used to set the maximum temperature for heating Zone2 room.
The thermostat is wired to IN6 on FTC. (If the thermostat is allocated to Zone1, wire it to IN1 on TBI.1.) (Refer to 5.4.2.)

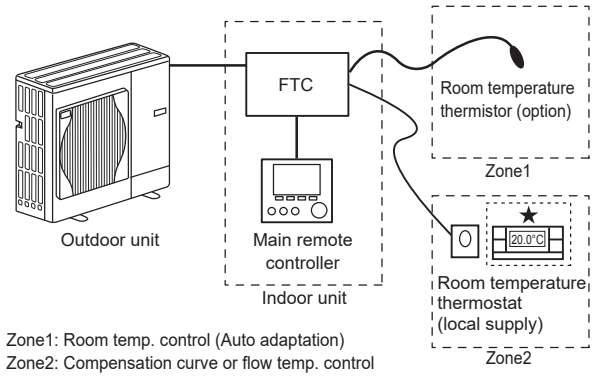


**Control option C**

This option features the main remote controller (with in-built thermistor) that is removed from the indoor unit to monitor the Zone1 room temperature and a locally supplied thermostat to monitor the Zone2 room temperature.
The thermostat can be also allocated to Zone1 and the thermistor to Zone2.

A thermistor built into the main remote controller can be used for monitoring the room temperature for Auto Adaptation function whilst keeping all its features of the main remote controller available.
The main remote controller and FTC are connected by a 2-core, 0.3 mm², non-polar cable (local supply) with a maximum length of 500 m.
To use the sensor in the main remote controller the main remote controller should be detached from the indoor unit. Otherwise it will detect the temperature of the indoor unit instead of room temperature. This will affect the output of the space heating.

The thermostat is used to set the maximum temperature for heating Zone2 room.
The thermostat is wired to IN6 on FTC. (If the thermostat is allocated to Zone1, wire it to IN1 on TBI.1.) (Refer to 5.4.2.)

Note: Wiring for main remote controller cable shall be (5 cm or more) apart from power source wiring so that it is not influenced by electrical noise from power source wiring. (Do NOT insert main remote controller cable and power source wiring in the same conduit.)

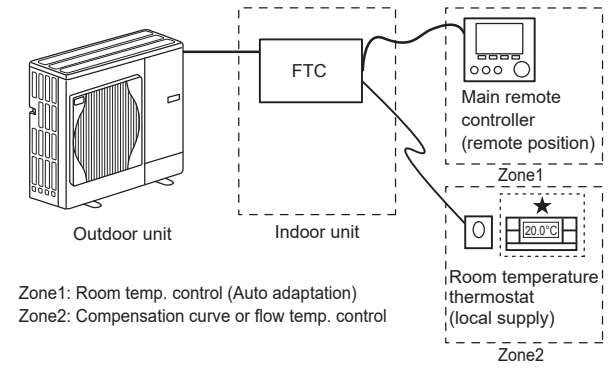


**Control option D**

This option features the locally supplied thermostats wired to FTC. The thermostats are individually allocated to Zone1 and Zone2. The thermostats are used to set each maximum temperature for heating Zone1 and Zone2 rooms. Any changes to DHW (*1) must be made using the main remote controller mounted on the indoor unit.

The thermostat for Zone1 is wired to IN1 in TBI.1 on FTC.
The thermostat for Zone2 is wired to IN6 in TBI.1 on FTC.

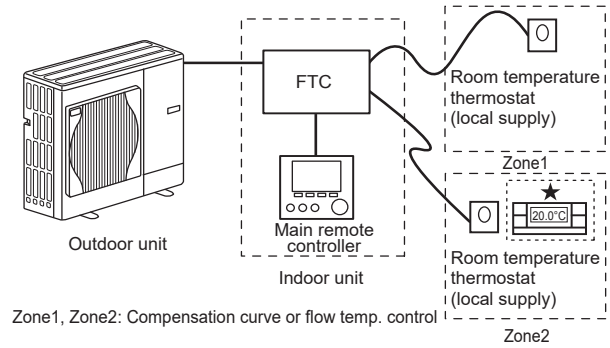


*1 If applicable
*2 For the options above, the sensor types can be exchanged between Zone1 and Zone2. (e.g. Wireless remote controller in Zone1 and Room temp. thermostat in Zone2 can be changed to Room temp. thermostat and wireless remote controller, respectively)

★ **The wireless remote controller can be also used as a thermostat.**

## 5.7.2 Main remote controller

To change the settings of your heating/cooling system please use the main remote controller located on the front panel of the cylinder unit or hydrobox. The following is a guide to viewing the main settings. Should you require more information please contact your installer or local Mitsubishi Electric dealer.
Cooling mode is available for ERS series only. However, Cooling mode is not available when the indoor unit is connected to PUHZ-FRP.

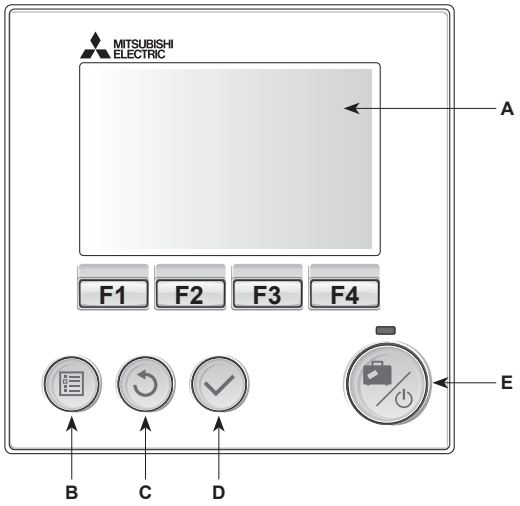


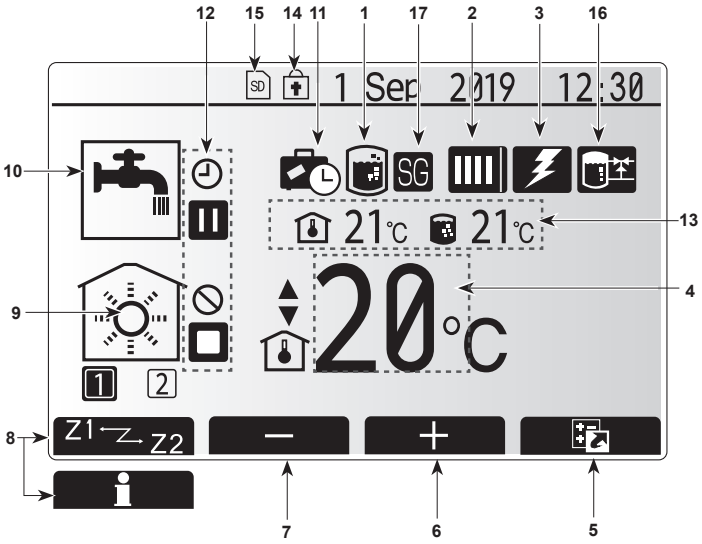


Main screen

**<Main remote controller parts>**

| Letter | Name | Function |
|---|---|---|
| A | Screen | Screen in which all information is displayed. |
| B | Menu | Access to system settings for initial set up and modifications. |
| C | Back | Return to previous menu. |
| D | Confirm | Used to select or save. (Enter key) |
| E | Power/Holiday | If system is switched off pressing once will turn system ON. Pressing again when system is switched on will enable Holiday Mode. Holding the button down for 3 secs will turn the system off. (***1**) |
| F1-4 | Function keys | Used to scroll through menu and adjust settings. Function is determined by the menu screen visible on screen A. |

***1**
**When the system is switched off or the power supply is disconnected, the indoor unit protection functions (e.g. freeze stat. function) will NOT operate. Please beware that without these safety functions enabled the indoor unit may potentially become exposed to damage.**

**<Main screen icons>**

| | Icon | Description |
|---|---|---|
| 1 | Legionella prevention | When this icon is displayed 'Legionella prevention mode' is active. |
| 2 | Heat pump | 'Heat pump' is running. |
| | | Defrosting |
| | | Emergency heating |
| | | 'Quiet mode' is activated. |
| 3 | Electric heater | When this icon is displayed the 'Electric heaters' (booster or immersion heater) are in use. |
| 4 | Target temperature | Target flow temperature |
| | | Target room temperature |
| | | Compensation curve |
| 5 | OPTION | Pressing the function button below this icon will display the option screen. |
| 6 | + | Increase desired temperature. |
| 7 | - | Decrease desired temperature. |
| 8 | Z1 Z2 | Pressing the function button below this icon switches between Zone1 and Zone2. |
| | Information | Pressing the function button below this icon displays the information screen. |
| 9 | Space heating (cooling) mode | Heating mode Zone1 or Zone2 |
| | | Cooling mode Zone1 or Zone2 |
| 10 | DHW mode | Normal or ECO mode |
| 11 | Holiday mode | When this icon is displayed 'Holiday mode' activated. |
| 12 | | Timer |
| | | Prohibited |
| | | Server control |
| | | Stand-by |
| | | Stand-by (***2**) |
| | | Stop |
| | | Operating |
| 13 | Current temperature | Current room temperature |
| | | Current water temperature of DHW tank |
| 14 | | The Menu button is locked or the switching of the operation modes between DHW and Heating operations are disabled in the Option screen. (***3**) |
| 15 | | SD memory card is inserted. Normal operation. |
| | | SD memory card is inserted. Abnormal operation. |
| 16 | Buffer tank control | When this icon is displayed 'Buffer tank control' is active. |
| 17 | Smart grid ready | When this icon is displayed, 'Smart grid ready' is active. |

***2 This unit is in Stand-by whilst other indoor unit(s) is in operation by priority.**
***3 To lock or unlock the Menu, press the BACK and CONFIRM keys simultaneously for 3 seconds.**

## ■ Initial settings wizard

When the main remote controller is switched on for the first time, the screen automatically goes to Language setting screen, Date/Time setting screen and Main settings menu screen in order. Enter the desired number using the function keys and press CONFIRM.

**Note:**
<HEATER CAPACITY RESTRICTION>
This setting restricts the booster heater capacity. It is NOT possible to change the setting after starting up.
If you do not have any special requirements (such as building regulations) in your country, skip this setting (select “No”).

- Hot water (DHW/Legionella)
- Heating/Cooling
- Operation (ON/Prohibited/Timer)
- Pump speed
- Heat pump flow rate range
- Mixing valve control
- HEATER CAPACITY RESTRICTION

*1 The screen goes to the next setting screen. Changes have not been saved.

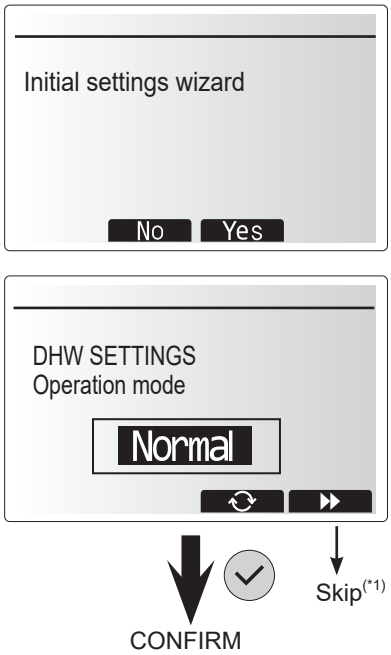


## ■ Main Settings Menu

The main settings menu can be accessed by pressing the MENU button. To reduce the risk of untrained end users altering the settings accidentally there are two access levels to the main settings; and the service section menu is password protected.

**User Level – Short press**
If the MENU button is pressed once for a short time the main settings will be displayed but without the edit function. This will enable the user to view current settings but **NOT** change the parameters.

**Installer Level – Long press**
If the MENU button is pressed down for 3 seconds the main settings will be displayed with all functionality available.
The colour of ◄ ► buttons is inverted, as per figure on right. <Fig. 5.7.1>.

The following items can be viewed and/or edited (dependent on access level).
- Domestic Hot water (DHW)
- Heating/Cooling
- Schedule timer
- Holiday mode
- Initial settings
- Service (Password protected)

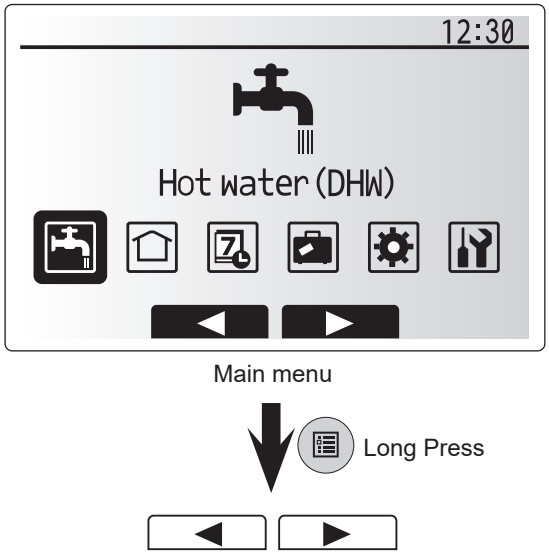


<Fig. 5.7.1>

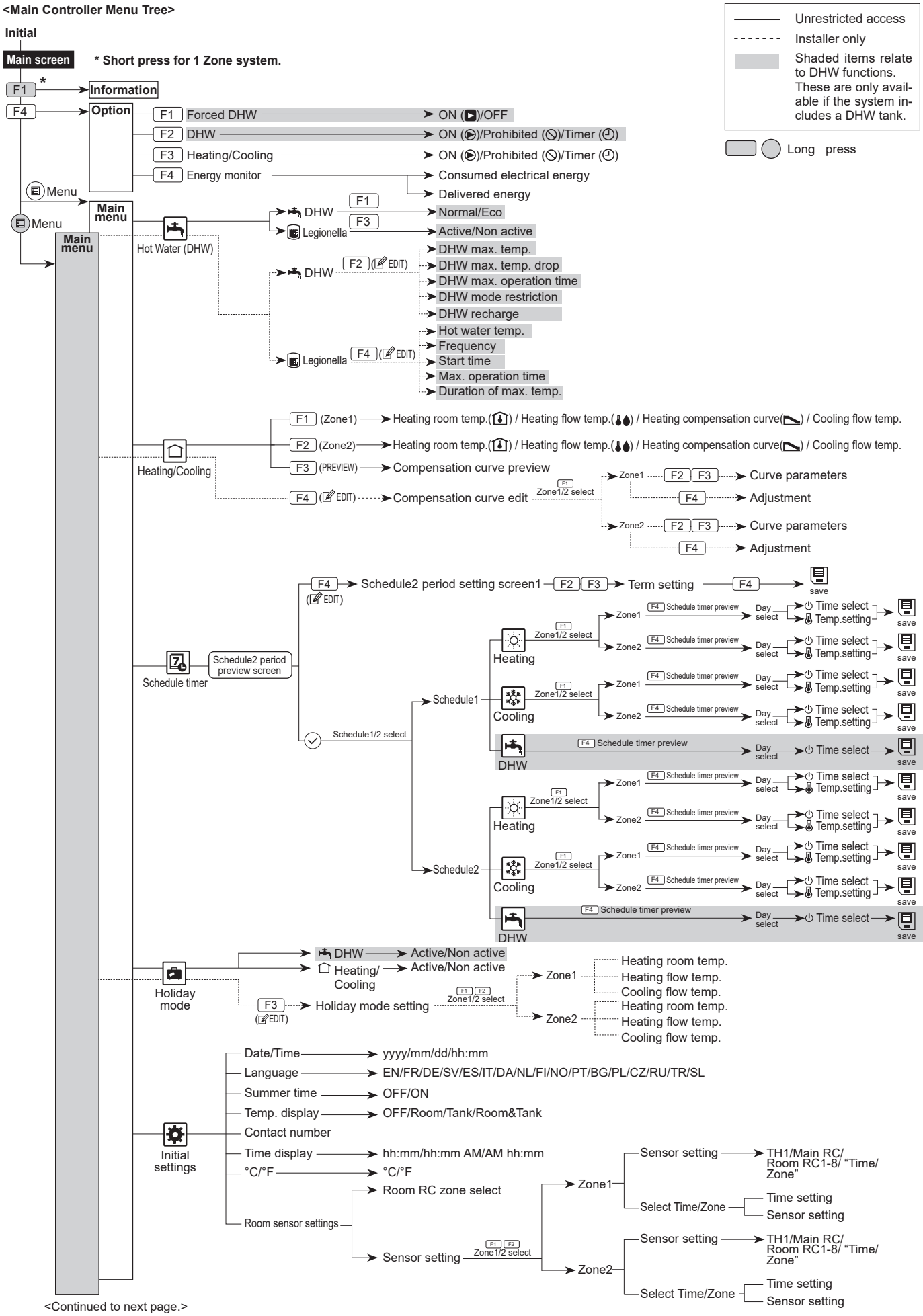


<Continued to next page.>

<Continued from the previous page.>

**<Main Controller Menu Tree>**

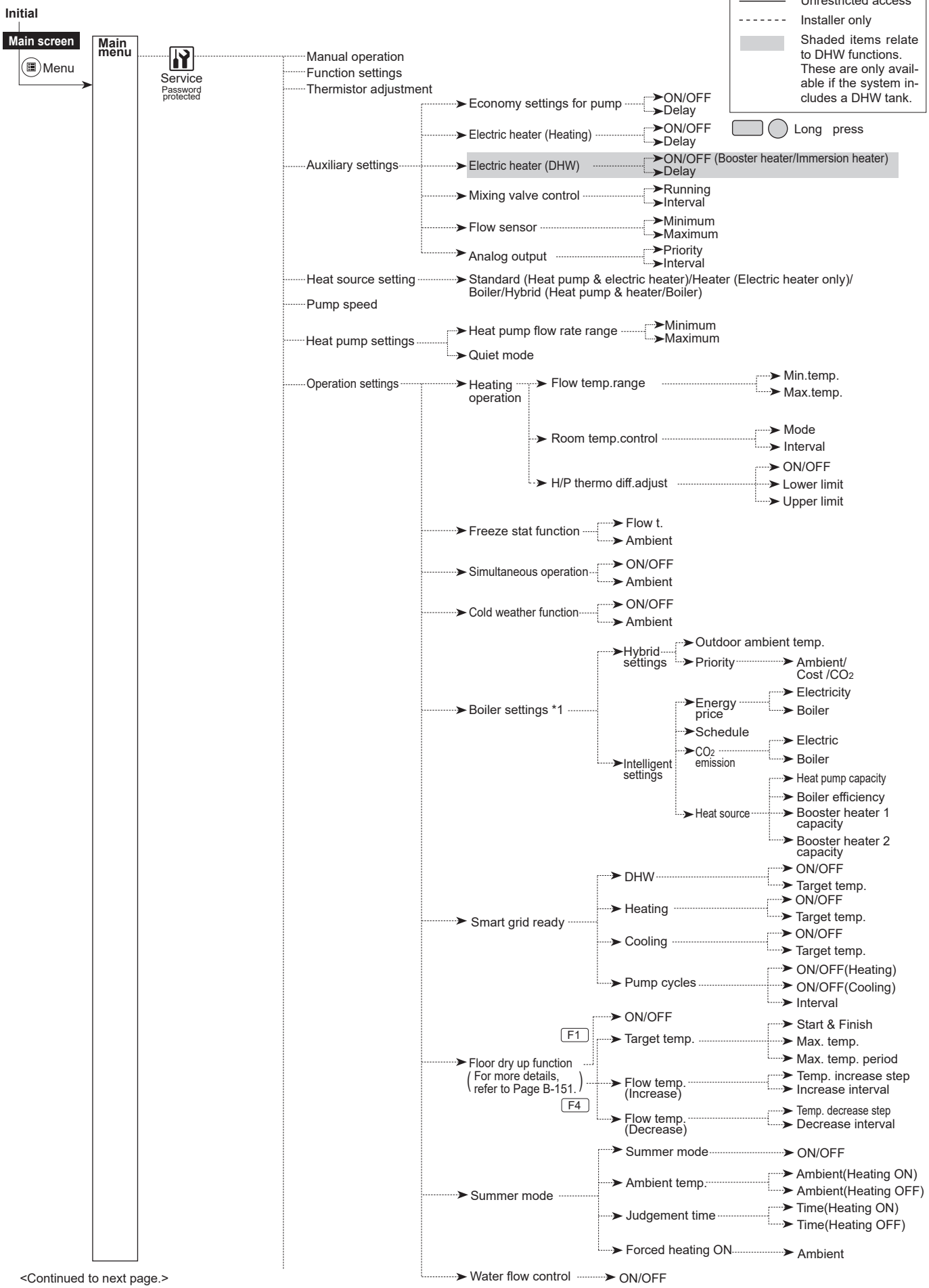


<Continued to next page.>

*1 For more details, refer to the installation manual of PAC-TH012HT(L)-E.

<Continued from the previous page.>

**<Main Controller Menu Tree>**

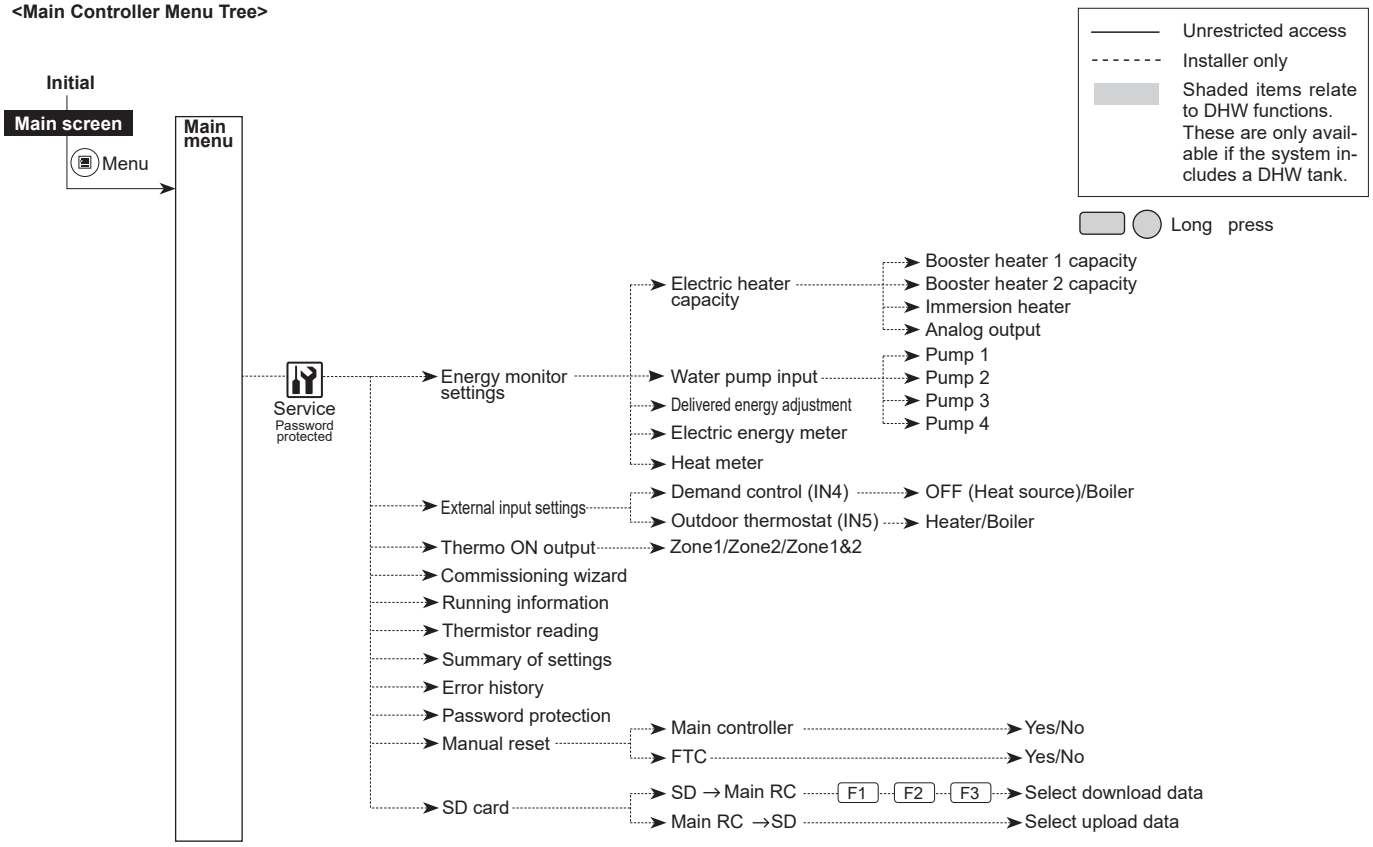


## Domestic Hot Water (DHW)/Legionella Prevention

The domestic hot water and legionella prevention menus control the operation of DHW tank heat ups.

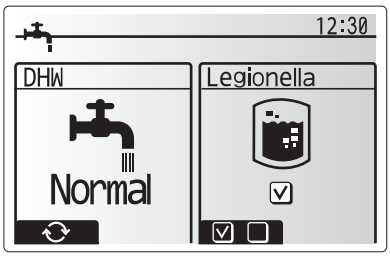


**<DHW mode settings>**

1. Highlight the hot water icon and press CONFIRM.
2. Use button F1 to switch between Normal and ECO heating modes.
3. To edit the mode, press down the MENU button for 3 seconds, then select “hot water”.
4. Press F2 key to display the Hot Water (DHW) SETTING menu.
5. Use F2 and F3 keys to scroll through the menu selecting each component in turn by pressing CONFIRM. See the table below for description of each setting.
6. Enter the desired number using the function keys and press CONFIRM.

| Menu subtitle | Function | Range | Unit | Default value |
|---|---|---|---|---|
| DHW max. temp. | Desired temperature of stored hot water | 40 - 60 | °C | 50 |
| DHW max. temp. drop | Difference in temperature between DHW max. temp. and the temperature at which DHW mode restarts | 5 - 30 * | °C | 10 |
| DHW max. operation time | Max. time allowed for stored water heating DHW mode | 30 - 120 | min | 60 |
| DHW mode restriction | The time period after DHW mode when space heating has priority over DHW mode temporarily preventing further stored water heating (Only when DHW max. operation time has passed.) | 30 - 120 | min | 30 |

* When the DHW max. temp is set over 55°C, the temperature at which DHW mode restarts must be less than 50°C to protect the device.

**<Eco mode>**

DHW mode can run in either ‘Normal’ or ‘Eco’ mode. Normal mode will heat the water in the DHW tank more quickly using the full power of the heat pump. Eco mode takes a little longer to heat the water in the DHW tank but the energy used is reduced. This is because heat pump operation is restricted using signals from the FTC based on measured DHW tank temperature.

**Note: The actual energy saved in Eco mode will vary according to outdoor ambient temperature.**

**<DHW recharge>**

Select the amount of DHW tank. If you need much hot water, select LARGE, but increase operating costs.

Return to the DHW/legionella prevention menu.

## Legionella Prevention Mode settings (LP mode)

1. Use button F3 to choose legionella mode active YES/NO.
2. To edit the legionella function, press down the MENU button for 3 seconds and select “hot water”, then press F4 key.
3. Use F1 and F2 keys to scroll through the menu selecting each subtitle in turn by pressing CONFIRM. See the table below for description of each setting.
4. Enter the desired number using the function keys and press CONFIRM.

During Legionella Prevention Mode the temperature of the stored water is increased above 60°C to inhibit legionella bacteria growth. It is strongly recommended that this is done at regular intervals. Please check local regulations for the recommended frequency of heat ups.

Please note that LP mode uses the assistance of electric heaters to supplement the energy input of the heat pump. Heating water for long periods of time is not efficient and will increase running costs. The installer should give careful consideration to the necessity of legionella prevention treatment whilst not wasting energy by heating the stored water for excessive time periods. The end user should understand the importance of this feature.
**ALWAYS COMPLY WITH LOCAL AND NATIONAL GUIDANCE FOR YOUR COUNTRY REGARDING LEGIONELLA PREVENTION.**

**Note: When failures occur on the indoor unit, the LP mode may not function normally.**

| Menu subtitle | Function | Range | Unit | Default value |
|---|---|---|---|---|
| Hot water temp. | Desired temp. of stored hot water | 60 – 70 | °C | 65 |
| Frequency | Time between LP mode DHW tank heat up | 1 – 30 | day | 15 |
| Start time | Time when LP mode will begin | 0:00 – 23:00 | - | 03:00 |
| Max. operation time | Maximum time allowed for LP mode DHW tank heat | 1 – 5 | hour | 3 |
| Duration of max. temp. | The time period after LP mode desired water temp. has been reached | 1 – 120 | min | 30 |



## Heating/Cooling

The heating/cooling menus deal with space heating/cooling using normally either a radiator, fan-coil, or underfloor heating/cooling system depending on the installation.

There are 3 heating modes

- Heating room temp. (Auto adaptation) ( )
- Heating flow temp. ( )
- Heating compensation curve ( )
- Cooling flow temp. ( )

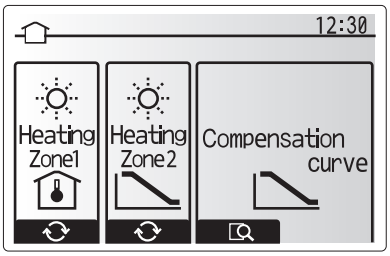


**<Room temp. (Auto adaptation) mode>**
In room temp. (Auto adaptation) mode the controller uses temperature sensors around the heating system to monitor space and flow temperatures. This data is regularly updated and compared to previous data by the controller to predict changes in room temperature and adjust the temperature of water flowing to the space heating circuit accordingly.
By monitoring not only the outdoor ambient, but the room and heating circuit water temperatures, the heating is more consistent and sudden spikes in required heat output are reduced. This results in a lower overall flow temperature being required.

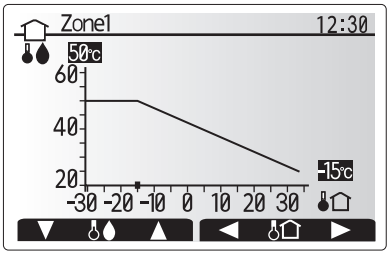


: Flow temp.
: Outdoor ambient temp.

**<Flow temp. mode>**
The temperature of the water flowing to the heating circuit is set by the installer to best suit the space heating/cooling system design, and user’s desired requirements.

**Explanation of compensation curve**
During late spring and summer usually the demand for space heating is reduced. To prevent the heat pump from producing excessive flow temperatures for the primary circuit the compensation curve mode can be used to maximise efficiency and reduce running costs.

The compensation curve is used to restrict the flow temperature of the primary space heating circuit dependent on the outdoor temperature. The FTC uses information from both an outdoor temperature sensor and a temperature sensor on the primary circuit supply to ensure the heat pump is not producing excessive flow temperatures if the weather conditions do not require it.

Your installer will set the parameters of the graph depending on local conditions and type of space heating used in your home. It should not be necessary for you to alter these settings. If however you find that over a reasonable operating period the space heating is not heating or is overheating your home, please contact your installer so they can check your system for any problems and update these settings if necessary.

## Schedule timer

Scheduled timer can be set in two ways, for example; one for summer and the other for winter. (Refer to as “Schedule 1” and “Schedule 2” respectively.) Once the term (months) for the Schedule 2 is specified, rest of the term will be specified as Schedule 1. In each Schedule, an operational pattern of modes (Heating/Cooling/DHW) can be set. If no operational pattern is set for Schedule 2, only the pattern for Schedule 1 will be valid. If Schedule 2 is set to full-year (i.e. March to Feb.), only the operational pattern for Schedule 2 will be valid.

**The schedule timer is activated or deactivated in the option screen. (See ‘General Operation’ section)**

**<Setting the Schedule period>**

1. From the main settings menu use F2 and F3 to highlight the schedule icon then press CONFIRM.
2. The Schedule period preview screen is displayed.
3. To change the Schedule period, press F4. button.
4. The time bar edit screen is displayed.
5. Use F2/F3 button to point at a starting month of the Schedule 2, then press CONFIRM.
6. Use F2/F3 button to point at an ending month of the Schedule 2, then press CONFIRM.
7. Press F4 to save settings.

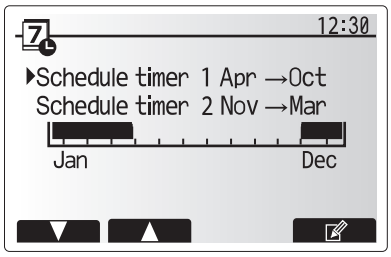


Schedule 2 period preview screen

**<Setting the Schedule timer>**

1. From the main settings menu use F2 and F3 to highlight the schedule icon then press CONFIRM.
2. From the Schedule 2 period preview screen use F1 and F2 to scroll through the selecting each subtitle in turn by pressing CONFIRM.
3. The schedule timer sub menu will be displayed. The icons show the following modes;
   - Heating
   - Cooling
   - DHW
4. Use F2 and F3 buttons to move between mode icons press CONFIRM to be shown the PREVIEW screen for each mode.

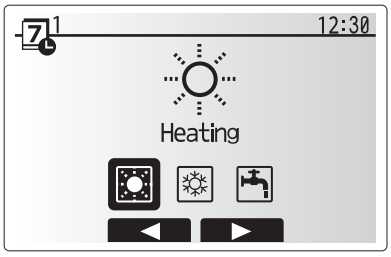


Schedule 1 mode select screen

The preview screen allows you to view the current settings. In 2-zone heating/cooling operation, press F1 to switch between Zone1 and Zone2. Days of the week are displayed across the top of the screen. Where day appears underlined the settings are the same for all those days underlined.
Hours of the day and night are represented as a bar across the main part of the screen. Where the bar is solid black, space heating/cooling and DHW (whichever is selected) is allowed.

5. In the preview menu screen press F4 button.

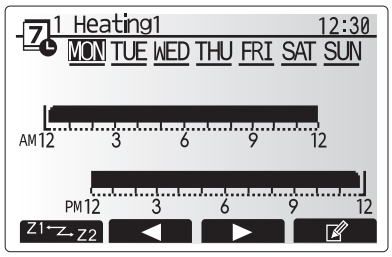


Preview screen

6. First select the days of the week you wish to schedule.
7. Press F2/F3 buttons to move between days and F1 to check or uncheck the box.
8. When you have selected the days press CONFIRM.

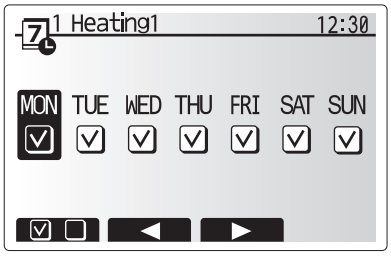


Day of week select screen

9. The time bar edit screen will be displayed.
10. Use buttons F2/F3 to move to the point at which you do not want the selected mode to be active press CONFIRM to start.
11. Use F3 button to set the required time of inactivity then press CONFIRM.
12. You can add up to 4 periods of inactivity within a 24 hour interval.

13. Press F4 to save settings.

When scheduling heating, button F1 changes the scheduled variable between time and temperature. This enables a lower temperature to be set for a number of hours e.g. a lower temperature may be required at night when the occupants are sleeping.

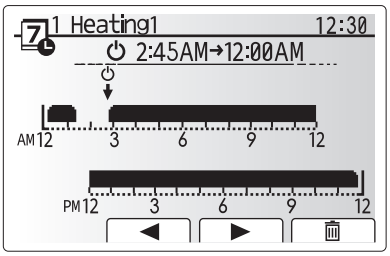

Time of period setting screen 1

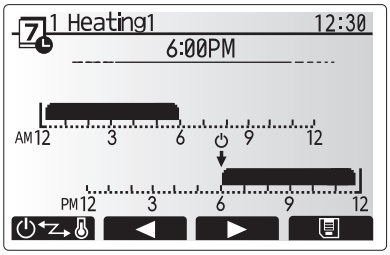

Time of period setting screen 2



**Notes:**
- **The schedule timer for space heating/cooling and DHW are set in the same way. However for DHW only time can be used as scheduling variable.**
- **A small rubbish bin character is also displayed choosing this icon will delete the last unsaved action.**
- **It is necessary to use the SAVE function F4 button to save settings. CONFIRM does NOT act as SAVE for this menu.**

## Holiday mode

Holiday mode can be used to keep the system running at lower flow temperatures and thus reduced power usage whilst the property is unoccupied. Holiday mode can run either flow temp., room temp., heating, compensation curve heating and DHW all at reduced flow temperatures to save energy if the occupier is absent.

From the main menu screen press button E should be pressed. Be careful not to hold down button E for too long as this will turn off the controller and system.

Once the holiday mode activation screen is displayed you can activate/deactivate and select the duration that you would like holiday mode to run for.
- Press button F1 to activate or deactivate holiday mode.
- Use buttons F2, F3 and F4 to input the date which you would like holiday mode to activate or deactivate holiday mode for space heating.

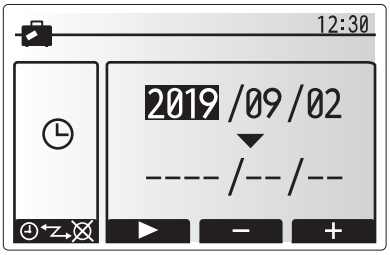


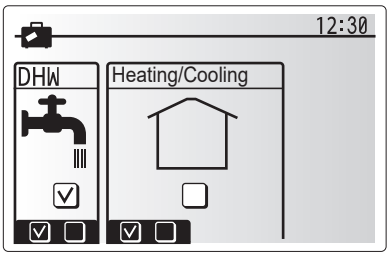


**<Editing holiday mode>**
Refer to the menu tree in “Main remote controller” of Installation Manual.
Should you require the Holiday mode settings e.g. the flow temp., room temp. to be altered you should contact your installer.

## Initial Settings

From the Initial settings menu the installer can set the following.
- Date/Time *Be sure to set it to the local standard time.
- Language
- Summer time
- Temp. display
- Contact number
- Time display
- ºC/ºF
- Room sensor settings

Follow the procedure described in General Operation for the set up operation.

**<Room sensor settings>**
For room sensor settings it is important to choose the correct room sensor depending on the heating mode the system will operate in.

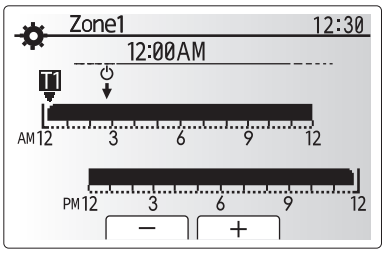

Time/Zone schedule setting screen

| Menu subtitle | Description |
|---|---|
| Room RC zone select | When 2-zone temperature control is active and wireless remote controllers are available, from Room RC zone select screen, select zone no. to assign to each main remote controller. |
| Sensor setting | From sensor setting screen, select a room sensor to be used for monitoring the room temperature from Zone1 and Zone2 separately. |

| Control option (Section 5.7.1) | Corresponding initial settings room sensor | |
|---|---|---|
| | Zone1 | Zone2 |
| A | Room RC 1-8 (one each for Zone1 and Zone2) | *1 |
| B | TH1 | *1 |
| C | Main remote controller | *1 |
| D | *1 | *1 |
| When different room sensors are used according to the time schedule | Time/ Zone*2 | *1 |

*1. Not specified (if a locally-supplied room thermostat is used) Room RC 1-8 (one each for Zone1 and Zone2) (if a wireless remote controller is used as a room thermostat)
*2. From sensor setting screen, select Time/Zone to make it possible to use different room sensors according to the time schedule set in the Select Time/ Zone menu. The room sensors can be switched up to 4 times within 24 hours.

## Service Menu

The service menu provides functions for use by installer or service engineer. It is NOT intended the home owner alters settings within this menu. It is for this reason password protection is required to prevent unauthorised access to the service settings.

The factory default password is "0000".
Follow the procedure described in General Operation for the set up operation.

Many functions can not be set whilst the indoor unit is running. The installer should turn off the unit before trying to set these functions. If the installer attempts to change the settings whilst the unit is running the main remote controller will display a reminder message prompting the installer to stop operation before continuing. By selecting “Yes” the unit will cease operation.

### <Manual operation>

During the filling of the system the primary circuit circulation pump and 3-way valve can be manually overridden using manual operation mode.
When manual operation is selected a small timer icon appears in the screen.
When selected, this function will only remain in manual operation for a maximum of 2 hours. This is to prevent accidental permanent override of the FTC.

►Example
Pressing F3 button will switch manual operation mode ON for the main 3-way valve. When filling of the DHW tank is complete the installer should access this menu again and press F3 to deactivate manual operation of the part.
Alternatively after 2 hours manual operation mode will no longer be active and FTC can resume control of the indoor unit.

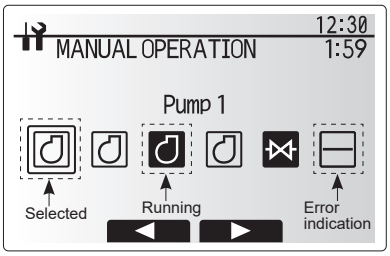


Manual operation menu screen

Manual operation and heat source setting can not be selected if the system is running. A screen will be displayed asking the installer to stop the system before these modes can be activated.
The system automatically stops 2 hours after last operation.

### <Function settings>

Function Setting allows the setting of auto recovery after power failure and of smart grid ready.

1. From the service menu use F1 and F2 to highlight Function Setting.
2. Press CONFIRM.
3. Ensure the Ref address and unit number are displayed to the right.
4. Press CONFIRM.
5. Use F3 and F4 to highlight either 1/2/3 (see below).
6. Press CONFIRM.

| Setting | Unit | Mode | Number |
|---|---|---|---|
| Auto recovery after power failure | Grp | Mode1 | 1 - Inactive<br>2 - Active *1<br>3 - NO FUNCTION |

*1 Approx. 4-minute delay after power is restored.

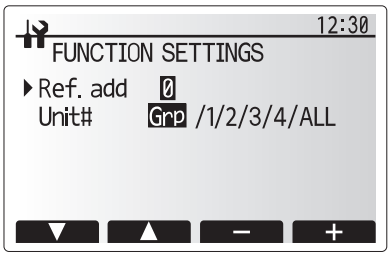


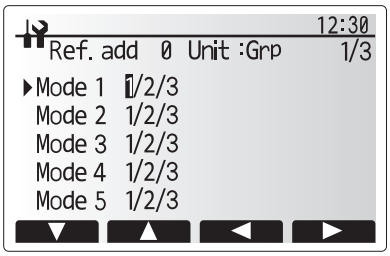


### <Thermistor adjustment>

This function allows adjustments to be made to the thermistor readings from −10 to 10°C in 0.5°C intervals.

THW1: Thermistor (Flow water temp.)
THW2: Thermistor (Return water temp.)
THW5B: Thermistor (DHW tank water temp.)(Option)
THW6: Thermistor (Zone1 flow temp.)(Option)
THW7: Thermistor (Zone1 return temp.)(Option)
THW8: Thermistor (Zone2 flow temp.)(Option)
THW9: Thermistor (Zone2 return temp.)(Option)
THW10: Thermistor (Mixing tank water temp.)
THWB1: Thermistor (Boiler flow temp.)(Option)

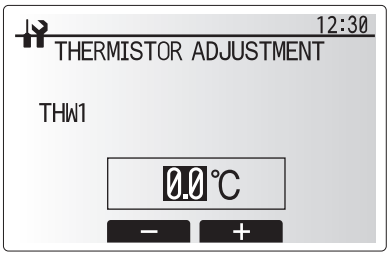

**<Auxiliary settings>**

This function is used to set the parameters for any auxiliary parts used in the system

| Menu subtitle | | Function/Description |
|---|---|---|
| Economy settings for pump | | Water pump stops automatically in certain period of time from when operation is finished. |
| | Delay | Time before pump switched off *1 |
| Electric heater (Heating) | | To select “WITH booster heater (ON)” or “WITHOUT booster heater (OFF)” in Heating mode. |
| | Delay | The minimum time required for the booster heater to turn ON from after Heating mode has started. |
| Electric heater (DHW) | | To select "WITH (ON)" or "WITHOUT (OFF)" booster heater or immersion heater individually in DHW mode. |
| | Delay | The minimum time required for the booster heater or immersion heater to turn ON from after DHW mode has started. (This setting is applied for both booster and immersion heater.) |
| Mixing valve control *2 | Running | Period from valve fully open (at a hot water mixing ratio of 100%) to valve fully closed (at a cold water mixing ratio of 100%) |
| | Interval | Interval (min.) to control the Mixing valve. |
| Flow sensor *3 | Minimum | The minimum flow rate to be detected at Flow sensor. |
| | Maximum | The maximum flow rate to be detected at Flow sensor. |

*1 Decreasing "time before pump switched off" may increase the duration of stand-by in Heating/Cooling mode.
*2 Set the Running time according to the specifications of the actuator of each mixing valve. It is recommended to set the interval to 2 minutes that is a default value. With the interval set longer, it could take longer to warm up a room.
*3 Do not change the setting since it is set according to the specification of Flow sensor attached to the hydrobox.

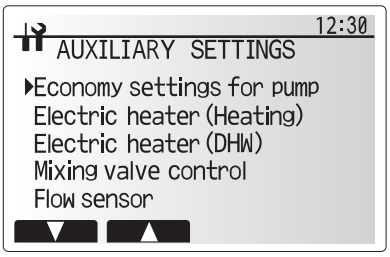


Auxiliary settings menu screen

**Economy settings for pump**

1. From the Auxiliary settings menu, highlight Economy Settings for water circulation pump.
2. Press CONFIRM.
3. The economy settings for water circulation pump screen is displayed.
4. Use button F1 to switch the economy settings ON/OFF.
5. Use buttons F3 and F4 to adjust the time the water circulation pump will run. (3–60 minutes)

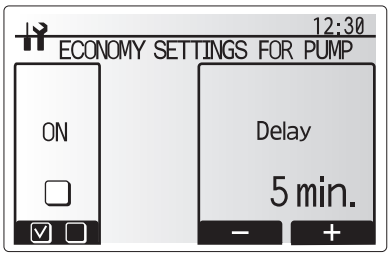


Economy settings for pump screen

**Electric heater (Heating)**

1. From the Auxiliary settings menu, highlight Electric heater (Heating).
2. Press CONFIRM.
3. The Electric heater (Heating) screen is displayed.
4. Press F1 button to switch the function ON/OFF.
5. Use F3 and F4 buttons to adjust the time period of heat pump only operation before the booster heater will assist in space heating. (5–180 minutes)

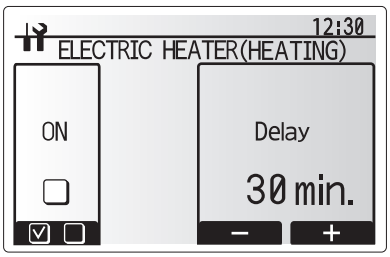


Electric heater (Heating) screen

**Electric heater (DHW)**

1. From the Auxiliary settings menu, highlight Electric heater (DHW).
2. Press CONFIRM.
3. The Electric heater (DHW) screen is displayed.
4. Press F1 button to switch the function ON/OFF.
5. Use F3 and F4 buttons to adjust the time period of heat pump only operation before the booster heater and the immersion heater (if present) will assist in DHW heating. (15–30 minutes)

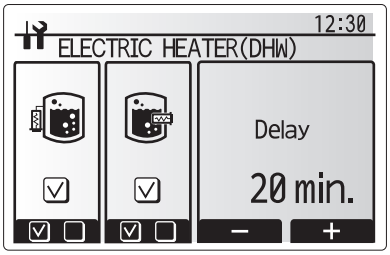


Electric heater (DHW) screen

**Mixing valve control**

1. From the Auxiliary settings menu, highlight Mixing valve control.
2. Press CONFIRM.
3. The Mixing valve control screen is displayed.
4. Use F1 and F2 buttons to set Running time between 10 to 240 seconds. The Running time equals to a period from full open of the valve (at a hot water mixing ratio of 100%) to full close (at a cold water mixing ratio of 100%).

**Note: Set the Running time according to the specifications of the actuator of each mixing valve.**

1. From the Auxiliary settings menu, highlight Mixing valve control.
2. Press CONFIRM.
3. The Mixing valve control screen is displayed.
4. Press F3 and F4 buttons to set the interval between 2-zone temperature controls of the mixing valve between 1 to 30 minutes.

**Note: It is recommended to set the interval to 2 minutes that is a default value. With the interval set longer, it could take longer to warm up a room.**

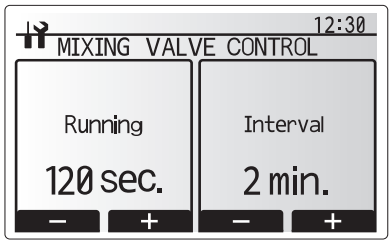

Mixing valve control setting screen

**Flow sensor**

1. From the Auxiliary settings menu, highlight Flow sensor.
2. Press CONFIRM.
3. Press F3 or F4 buttons to select a refrigerant address of which you wish to configure or check the settings, and press CONFIRM. *1
4. The Flow sensor screen is displayed.
5. Use F1 and F2 buttons to set the minimum flow rate of flow sensor between 0 to maximum L/min.
6. Use F1 and F2 buttons to set the maximum flow rate of flow sensor between minimum to 100L/min.

*1 For multiple outdoor units control system only.

**Note: Do not change the setting since it is set according to the specification of Flow sensor attached to the hydrobox.**

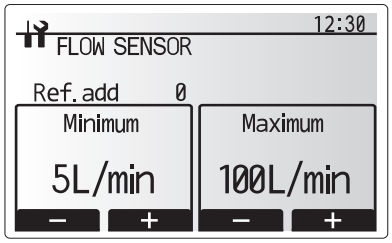

Flow sensor setting screen

**<Heat source setting>**

The default heat source setting is heat pump and all electric heaters present in the system to be operational. This is referred to as Standard operation on the menu.

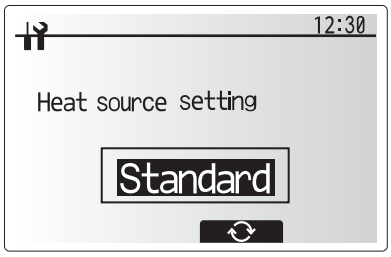

Heat source setting screen

**<Pump speed>**

1. From the Service menu, highlight Pump speed.
2. Press CONFIRM.
3. Press F3 and F4 buttons to select a refrigerant address of which you wish to configure or check the settings, and press CONFIRM. *1
4. The Pump speed screen is displayed.
5. Use F1 and F2 buttons to set the pump speed (1 to 5) of DHW operation.
6. Use F3 and F4 buttons to set the pump speed (1 to 5) of space heating(cooling) operation.

*1 For multiple outdoor units control system only.

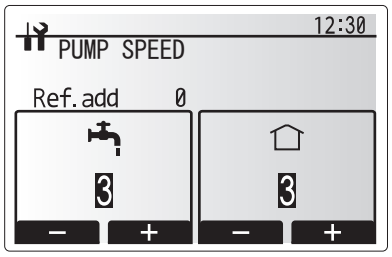

Pump speed setting screen

### <Operation settings>

**Heating operation**

This function allows operational setting of flow temperature range from the Ecodan and also the time interval at which the FTC collects and processes data for the auto adaptation mode.

| Menu subtitle | | Function | Range | Unit | Default |
|---|---|---|---|---|---|
| Flow temp. range | Minimum temp. | To minimize the loss by frequent ON and OFF in mild outdoor ambient temperature seasons. | 20 to 45 | ºC | 30 |
| | Maximum temp. | To set max. possible flow temperature according to the type of heat emitters. | 35 to 60 | ºC | 50 |
| Room temp. control | Mode | Setting for Room temp. control<br>At Fast mode, target outlet water temperature is set higher than the one set at normal mode. This reduces the time to reach the target room temperature when the room temperature is relatively low.*1 | Normal/ Fast | — | Normal |
| | Interval | Selectable according to the heat emitter type and the materials of floor (i.e. radiators, floor heating-thick, -thin concrete, wood, etc.) | 10 to 60 | min | 10 |
| Heat pump thermo diff.adjust | ON/OFF | To minimize the loss by frequent ON and OFF in mild outdoor ambient temperature seasons. | ON/OFF | — | ON |
| | Lower limit | Prohibits heat pump operation until the flow temperature drops below the target flow temperature plus lower limit value. | −9 to −1 | ºC | −5 |
| | Upper limit | Allows heat pump operation until the flow temperature rises above the target flow temperature plus upper limit value. | +3 to +5 | ºC | +5 |

< Heating operation (Room temp. control) >

**Note:**

1. The minimum flow temperature that prohibits heat pump operation is 20ºC.
2. The maximum flow temperature that allows heat pump operation equals to the maximum temperature set in the Flow temp. range menu.

*1 Fast mode is not efficient and will increase running cost compared to normal mode.

**Freeze stat function**

| Menu subtitle | | Function/Description |
|---|---|---|
| Freeze stat function *2 | | An operational function to prevent the water circuit from freezing when outdoor ambient temperature drops. |
| | Flow t. | The target outlet water temperature at water circuit when operating in Freeze stat function.*3 |
| | Outdoor ambient temp. | Minimum outdoor ambient temperature which freeze stat function will begin to operate,<br>(3–20ºC) or choose**. If asterisk (**) is chosen freeze stat function is deactivated. (i.e. primary water freeze risk) |

*2 When the system is turned off, freeze stat function is not enabled.
*3 Flow t. is fixed to 20°C and unchangeable.

**Simultaneous Operation**

For periods of very low outside temperature, this mode can be used. Simultaneous operation allows both DHW and space heating to run together by using the heat pump and/or booster heater to provide space heating whilst only the immersion heater provides heating for DHW. This operation is only available if BOTH a DHW tank AND immersion heater are present on the system.

- Range of outdoor ambient temperature at which simultaneous operation starts is −30 to 10°C (default −15°C).
- System shall automatically return to routine operation. This will happen when the outdoor ambient temperature rises above the selected temperature for this specific mode of operation.

**Cold weather function**

For extremely low outdoor ambient temperature conditions when the heat pump's capacity is restricted, the heating or DHW is provided only by the electric booster heater (and immersion if present). This function is intended for use during extreme cold periods only. Extensive use of direct electrical heaters ONLY will result in higher power consumption and may reduce working life of heaters and related parts.

- Range of outdoor ambient temperature at which cold weather function starts is −30 to −10°C (default −15°C).
- System shall automatically return to routine operation. This will happen when the outdoor ambient temperature rises above the selected temperature for this specific mode of operation.

## Smart grid ready

In DHW or heating operation, the commands in the table below can be used.

| IN11 | IN12 | Meaning |
|---|---|---|
| OFF (open) | OFF (open) | Normal operation |
| ON (short) | OFF (open) | Switch-on recommendation*1 |
| OFF (open) | ON (short) | Switch-off command |
| ON (short) | ON (short) | Switch-on command*2 |

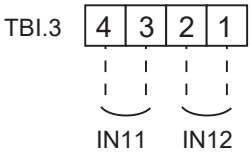


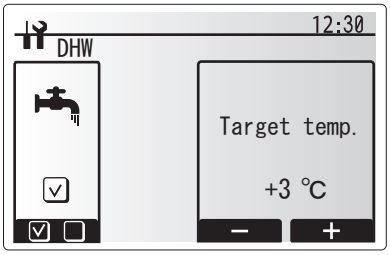


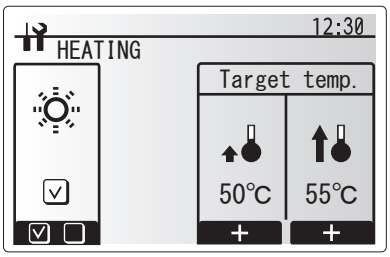


## Floor dry up function

The Floor dry up function automatically changes the target hot water temperature in stages to gradually dry concrete when this particular type of underfloor heating system is installed.

Upon completion of the operation the system stops all the operations except the Freeze stat. operation.
For Floor dry up function, the target flow temp. of Zone1 is the same as that of Zone2.

- This function is not available when a PUHZ-FRP outdoor unit is connected.
- Disconnect wiring to external inputs of room thermostat, demand control, and outdoor thermostat, or the target flow temperature may not be maintained.

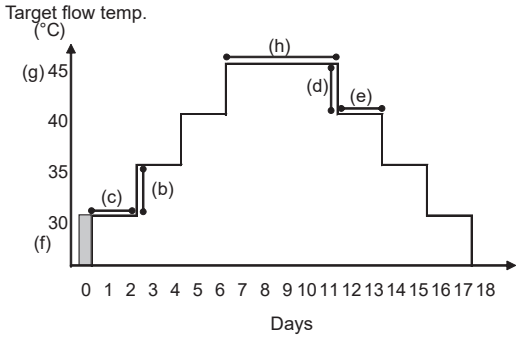


| Functions | | Symbol | Description | Option/Range | Unit | Default |
|---|---|---|---|---|---|---|
| Floor dry up function | | a | Set the function to ON and power on the system using the main remote controller, and the dry up heating operation will start. | On/Off | — | Off |
| Flow temp. (increase) | Flow temp. increase step | b | Sets the increase step of the target flow temperature. | +1 to +10 | ºC | +5 |
| | Increase interval | c | Sets the period for which the same target flow temperature is maintained. | 1 to 7 | day | 2 |
| Flow temp. (decrease) | Flow temp. decrease step | d | Sets the decrease step of the target flow temperature. | −1 to −10 | ºC | −5 |
| | Decrease interval | e | Sets the period for which the same target flow temperature is maintained. | 1 to 7 | day | 2 |
| Target temperature | Start & Finish | f | Sets the target flow temperature at the start and the finish of the operation. | 20 to 60 | ºC | 30 |
| | Max. target temp. | g | Sets the maximum target flow temperature. | 20 to 60 | ºC | 45 |
| | Max. temp. period | h | Sets the period for which the maximum target flow temperature is maintained. | 1 to 20 | day | 5 |

### <Password protection>

Password protection is available to prevent unauthorised access to the service menu by untrained persons.

**Resetting the password**

If you forget the password you entered, or have to service a unit somebody else installed, you can reset the password to the factory default of **0000**.

1. From the main settings menu scroll down the functions until Service Menu is highlighted.
2. Press CONFIRM.
3. You will be prompted to enter a password.
4. Hold down buttons F3 and F4 together for 3 seconds.
5. You will be asked if you wish to continue and reset the password to default setting.
6. To reset press button F3.
7. The password is now reset to **0000**.

### <Manual reset>

Should you wish to restore the factory settings at any time you should use the manual reset function. Please note this will reset ALL functions to the factory default settings.

Password input screen

Password verify screen

## ■ Energy monitor

End user can monitor accumulated*1 'Consumed electrical energy' and 'Delivered heat energy' in each operation mode*2 on the main remote controller.
*1 Monthly and Year to date
*2 - DHW operation
- Space heating
- Space cooling

Refer to "5.7.2 Main remote controller" for how to check the energy, and "5.3 DIP switch functions" for the details on DIP-SW setting.
Either one of the following two method is used for monitoring.
**Note: Method 1 should be used as a guide. If a certain accuracy is required, method 2 should be used.**

1. Calculation internally [method 1]
Electricity consumption is calculated internally based on the energy consumption of outdoor unit, electric heater, water pump(s) and other auxiliaries. (*1)
Delivered heat is calculated internally by multiplying delta T (Flow and Return temp.) and flow rate measured by the factory fitted sensors.
Set the electric heater capacity and water pump(s) input according to indoor model name and specs of additional pump(s) supplied locally. (Refer to the menu tree in "5.7.2 Main remote controller")

| | Booster heater1 | Booster heater2 | Pump1 * 2 | Pump2 | Pump3 |
|---|---|---|---|---|---|
| Default | 2 kW | 4 kW | ***(factory fitted pump) | 0 kW | 0 kW |
| EHSD-MED | 0 kW | 0 kW | *** | When additional pumps supplied locally are connected as Pump2/3, change setting according to specs of the pumps. | |
| EHSD-VM2D | 2 kW | 0 kW | *** | | |
| EHSD-VM6D | 2 kW | 4 kW | *** | | |
| EHSD-YM9D | 3 kW | 6 kW | *** | | |
| EHSD-YM9ED | 3 kW | 6 kW | *** | | |
| EHSD-TM9D | 3 kW | 6 kW | *** | | |
| EHSC-MED | 0 kW | 0 kW | *** | | |
| EHSC-VM2D | 2 kW | 0 kW | *** | | |
| EHSC-VM6D | 2 kW | 4 kW | *** | | |
| EHSC-YM9D | 3 kW | 6 kW | *** | | |
| EHSC-YM9ED | 3 kW | 6 kW | *** | | |
| EHSC-TM9D | 3 kW | 6 kW | *** | | |
| ERSD-VM2D | 2 kW | 0 kW | *** | | |
| ERSD-VM6D | 2 kW | 4 kW | *** | | |
| ERSD-YM9D | 3 kW | 6 kW | *** | | |
| ERSC-MED | 0 kW | 0 kW | *** | | |
| ERSD-MED | 0 kW | 0 kW | *** | | |
| ERSC-VM2D | 2 kW | 0 kW | *** | | |
| ERSC-VM6D | 2 kW | 4 kW | *** | | |
| ERSC-YM9D | 3 kW | 6 kW | *** | | |
| EHSE-MED | 0 kW | 0 kW | *** | | |
| EHSE-YM9ED | 3 kW | 6 kW | *** | | |
| ERSE-MED | 0 kW | 0 kW | *** | | |
| ERSE-YM9ED | 3 kW | 6 kW | *** | | |
| EHPX-MED | 0 kW | 0 kW | *** | | |
| EHPX-VM2D | 2 kW | 0 kW | *** | | |
| EHPX-VM6D | 2 kW | 4 kW | *** | | |
| EHPX-YM9D | 3 kW | 6 kW | *** | | |
| EHPX-YM9ED | 3 kW | 6 kW | *** | | |
| ERPX-MD | 0 kW | 0 kW | *** | | |
| ERPX-VM2D | 2 kW | 0 kW | *** | | |
| ERPX-VM6D | 2 kW | 4 kW | *** | | |
| ERPX-YM9D | 3 kW | 6 kW | *** | | |

<Table 5.7.1>

*1 When the hydrobox is connected with a PUHZ-FRP or PUMY models, electricity consumption is not calculated internally. To display the electricity consumption, conduct method 2.
*2 "***" displayed in the energy monitor setting mode means the factory fitted pump is connected as Pump 1 so that the input is automatically calculated.

When anti-freeze solution (propylene glycol) is used for primary water circuit, set the delivered energy adjustment if necessary.
For further detail of above, refer to "5.7.2 Main remote controller".

2. Actual measurement by external meter [method 2] (locally supplied)
FTC has external input terminals for 2 'Electric energy meters' and a 'Heat meter'.
If two 'Electric energy meters' are connected, the 2 recorded values will be combined at the FTC and shown on the main remote controller.
(e.g. Meter 1 for H/P power line, Meter 2 for heater power line)
Refer to the [Signal inputs] section in "5.4.2 Connecting inputs/outputs" for more information on connectable electric energy meter and heat meter.

## 5.8. Service and Maintenance

The indoor hydrobox must be serviced **once a year** by a qualified individual. Servicing and maintenance of the outdoor unit should only be done by a Mitsubishi Electric trained technician with relevant qualifications and experience. Any electrical work should be done by a tradesperson with the appropriate electrical qualifications. Any maintenance or 'DIY' fixes done by a non-accredited person could invalidate the Warranty and/or result in damage to the hydrobox and injury to the person.

### ■ Basic Troubleshooting

| No. | Fault symptom | Possible cause | Explanation - Solution |
|---|---|---|---|
| 1 | Main remote controller display is blank. | 1. There is no power supply to main remote controller.<br><br>2. Power is supplied to main remote controller, however, the display on the main remote controller does not appear. | 1. Check LED2 on FTC. (See "5.2 Wiring diagrams".)<br>(i) When LED2 is lit.<br>Check for damage or contact failure of the main remote controller wiring.<br>(ii) When LED2 is blinking.<br>Refer to No. 5 below.<br>(iii) When LED2 is not lit.<br>Refer to No. 4 below.<br>2. Check the following:<br>• Disconnection between the main remote controller cable and the FTC control board<br>• Failure of the main remote controller if "Please Wait" is not displayed.<br>• Refer to No. 2 below if "Please Wait" is displayed. |
| 2 | "Please Wait" remains displayed on the main remote controller. | 1. "Please Wait" is displayed for up to 6 minutes.<br>2. Communication failure between the main remote controller and FTC<br>3. Communication failure between FTC and outdoor unit | 1. Normal operation, no action necessary.<br>2.,3. Main remote controller start up checks/procedure<br>(i) If "0%" or "50–99%" is displayed below "Please Wait" there is a communication error between the main remote controller and the FTC control board.<br>• Check wiring connections on the main remote controller.<br>• Replace the main remote controller or the FTC control board.<br>(ii) If "1–49%" is displayed there is a communication error between the outdoor unit's and FTC's control boards.<br>• Check the wiring connections on the outdoor unit control board and the FTC control board.<br>(Ensure S1 and S2 are not cross-wired and S3 is securely wired with no damage. See "5.4 Field wiring".)<br>• Replace the outdoor unit's and/or the FTC's control boards. |
| 3 | The main screen appears with a press of the "ON" button, but disappears in a second. | The main remote controller operations do not work for a while after the settings are changed in the service menu. This is because the system takes time to apply the changes. | Normal operation, no action necessary.<br>The indoor unit is applying updated settings made in the service menu. Normal operation will start shortly. |
| 4 | LED2 on FTC is off. (See "5.2 Wiring diagrams".) | When LED1 on FTC is also off. (See "5.2 Wiring diagrams".)<br><FTC powered via outdoor unit.><br>1. The outdoor unit is not supplied at the rated voltage.<br><br>2. Defective outdoor controller circuit board<br><br>3. FTC is not supplied with 220 to 240 V AC.<br><br>4. FTC failure<br><br>5. Faulty connector wiring | 1. Check the voltage across the terminals L and N or L3 and N on the outdoor power board. (See "5.4 Field wiring".)<br>• When the voltage is not 220 to 240 V AC, check wiring of the outdoor unit and of the breaker.<br>• When the voltage is at 220 to 240 V AC, go to "2." below.<br>2. Check the voltage across the outdoor unit terminals S1 and S2. (See "5.4 Field wiring".)<br>• When the voltage is not 220 to 240 V AC, check the fuse on the outdoor control board and check for faulty wiring.<br>• When the voltage is 220 to 240 V AC, go to "3." below.<br>3. Check the voltage across the indoor unit terminals S1 and S2. (See "5.4 Field wiring".)<br>• When the voltage is not 220 to 240 V AC, check FTC-outdoor unit wiring for faults.<br>• When the voltage is 220 to 240 V AC, go to "4." below.<br>4. Check the FTC control board.<br>• Check the fuse on FTC control board.<br>• Check for faulty wiring.<br>• If no problem found with the wiring, the FTC control board is faulty.<br>5. Check the connector wiring.<br>• When the connectors are wired incorrectly, re-wire the connectors referring to below. (See "5.4 Field wiring".)<br> 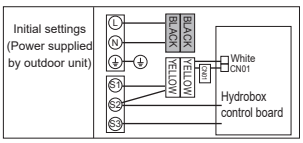 |

| No. | Fault symptom | Possible cause | Explanation - Solution |
|---|---|---|---|
| 4 | LED2 on FTC is off.<br>(See "5.2 Wiring diagrams".) | <FTC powered on independent source><br>1. FTC is not supplied with 220 to 240 V AC. | 1. Check the voltage across the L and N terminals on the indoor power supply terminal block. (See "5.4 Field wiring".)<br>• When the voltage is not 220 to 240 V AC, check for faulty wiring to power supply.<br>• When the voltage is 220 to 240 V AC, go to 2. below. |
| | | 2. There are problems in the method of connecting the connectors. | 2. Check for faulty wiring between the connectors.<br>• When the connectors are wired incorrectly re-wire them correctly referring to below. (See "5.4 Field wiring". and a wiring diagram on the control and electrical box cover.)<br> 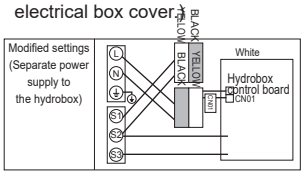 <br><br>• If no problem found with the wiring, go to 3. below. |
| | | 3. FTC failure | 3. Check the FTC control board.<br>• Check the fuse on FTC control board.<br>• Check for faulty wiring.<br>• If no problem found with the wiring, the FTC control board is faulty. |
| | | When LED1 on FTC is lit.<br>Incorrect setting of refrigerant address for outdoor unit<br>(None of the refrigerant address is set to "0".) | Recheck the refrigerant address setting on the outdoor unit.<br>Set the refrigerant address to “0”.<br>(Set refrigerant address using SW1(3–6) on outdoor controller circuit board.) |
| 5 | LED2 on FTC is blinking.<br>(See "5.2 Wiring diagrams".) | When LED1 is also blinking on FTC .<br>Faulty wiring between FTC and outdoor unit | Check for faulty wiring between FTC and outdoor unit. |
| | | When LED1 on FTC is lit.<br>1. Faulty wiring in main remote controller<br>Multiple indoor units have been wired to a single outdoor unit.<br>2. Short-circuited wiring in main remote controller<br>3. Main remote controller failure | 1. Check for faulty wiring in main remote controller.<br>The number of indoor units that can be wired to a single outdoor unit is one. Additional indoor units must be wired individually to a single outdoor unit.<br>2.,3. Remove main remote controller wires and check LED2 on FTC. (See Figure 5.4.7)<br>• If LED2 is blinking check for short circuits in the main remote controller wiring.<br>• If LED2 is lit, wire the main remote controller again and:<br>- if LED2 is blinking, the main remote controller is faulty;<br>- if LED2 is lit, faulty wiring of the main remote controller has been corrected. |
| 6 | LED4 on FTC is off.<br>(See "5.2 Wiring diagrams".) | 1. SD memory card is NOT inserted into the memory card slot with correct orientation.<br>2. Not an SD standards compliant memory card | 1. Correctly insert SD memory card in place until a click is heard.<br>2. Use an SD standards compliant memory card. (Refer to section 5.4.5 in installation manual) |
| | LED4 on FTC is blinking.<br>(See "5.2 Wiring diagrams".) | 1. Full of data<br>2. Write-protected<br>3. NOT formatted<br>4. Formatted in NTFS file system | 1. Move or delete data, or replace SD memory card with a new one.<br>2. Release the write-protect switch.<br>3. Refer to "5.4.5 Using SD memory card" in installation manual.<br>4. FTC is Not compatible with NTFS file system. Use an SD memory card formatted in FAT file system. |
| 7 | No water at hot tap. | 1. Cold main off<br>2. Strainer (local supply) blocked | 1. Check and open stop cock.<br>2. Isolate water supply and clean strainer. |
| 8 | Cold water at tap. | 1. Hot water run out.<br>2. Prohibit, schedule timer or holiday mode selected or demand control input (IN4) or smart grid ready (switch-off command).<br>3. Heat pump not working<br>4. Booster heater cut-out tripped.<br>5. The earth leakage circuit breaker for booster heater breaker (ECB1) tripped.<br>6. The booster heater thermal cut-out has tripped and cannot be reset using the manual reset button.<br>7. Immersion heater cut-out tripped.<br>8. Immersion heater breaker (ECB2) tripped.<br>9. 3-way valve fault | 1. Ensure DHW mode is operating and wait for DHW tank to re-heat.<br>2. Check settings and change as appropriate.<br>3. Check heat pump – consult outdoor unit service manual.<br>4. Check booster heater thermostat and press reset button if safe.<br>Reset button is located on the side of booster heater, covered with white rubber cap. See "5.5.1 Component parts" to find out its position.<br>5. Check the cause and reset if safe.<br>6. Check resistance across the thermal cut-out, if open then the connection is broken and the booster heater will have to be replaced.<br>Contact your Mitsubishi Electric dealer.<br>7. Check immersion heater thermostat and press reset button, located on immersion heater boss, if safe. If the heater has been operated with no water inside it may have failed, so please replace it with a new one.<br>8. Check the cause and reset if safe.<br>9. Check plumbing/wiring to 3-way valve.<br>(i) Manually override 3-way valve using the main remote controller. (Refer to <Manual operation> in section "5.7 System setup".) If the valve does not still function, go to (ii) below.<br>(ii) Replace 3-way valve. |

| No. | Fault symptom | Possible cause | Explanation - Solution |
|---|---|---|---|
| 9 | Water heating takes longer. | 1. Heat pump not working<br>2. Booster heater cut-out tripped.<br>3. Booster heater breaker (ECB1) tripped.<br>4. The booster heater thermal cut-out has tripped and cannot be reset using the manual reset button.<br>5. Immersion heater cut-out has been triggered.<br>6. Immersion heater breaker (ECB2) tripped. | 1. Check heat pump – consult outdoor unit service manual.<br>2. Check booster heater thermostat and press reset button if safe. Reset button is located on the side of booster heater, covered with white rubber cap. See "5.5.1 Component parts" to find out its position.<br>3. Check the cause and reset if safe.<br>4. Check resistance across the thermal cut-out, if open then connection is broken and the booster heater will have to be replaced. Contact your Mitsubishi Electric dealer.<br>5. Check immersion heater thermostat and press reset button if safe. If the heater kept running with no water inside, this may have resulted in failure, so replace it with a new one.<br>6. Check the cause and reset if safe. |
| 10 | Temperature of DHW tank water dropped. | When DHW operation is not running, the DHW tank emits heat and the water temperature decreases to a certain level. If water in the DHW tank is reheated frequently because of a significant drop in water temperature, check for the following.<br>1. Water leakage in the pipes that connect to the DHW tank<br>2. Insulation material coming loose or off<br>3. 3-way valve failure | 1. Take the following measures.<br>• Retighten the nuts holding the pipes onto the DHW tank.<br>• Replace seal materials.<br>• Replace the pipes.<br>2. Fix insulation.<br>3. Check plumbing/wiring to 3-way valve.<br>(i) Manually override 3-way valve using the main remote controller. (Refer to <Manual operation> in "5.7 System setup".) If the valve does not still function, go to (ii) below.<br>(ii) Replace 3-way valve. |
| 11 | Hot or warm water from cold tap. | Heat of hot water pipe is transferred to cold water pipe. | Insulate/re-route pipework. |
| 12 | Water leakage | 1. Poorly sealed connections of water circuit components<br>2. Water circuit components reaching the end of life | 1. Tighten connections as required.<br>2. Refer to PARTS CATALOG in the service manual for expected part lifetimes and replace them as necessary. |
| 13 | Heating system does not reach the set higher temperature. | 1. Prohibit, schedule timer or holiday mode selected or demand control input (IN4) or smart grid ready (switch-off command).<br>2. Check settings and change as appropriate.<br>3. The temperature sensor is located in a room that has a different temperature relative to that of the rest of the house.<br>4. Heat pump not working<br>5. Booster heater cut-out tripped.<br>6. Booster heater breaker (ECB1) tripped.<br>7. The booster heater thermal cut-out tripped and cannot be reset using the manual reset button.<br>8. Incorrectly sized heat emitter<br>9. 3-way valve failure<br>10. Battery problem (*wireless control only)<br>11. If a mixing tank is installed, the flow rate between the mixing tank and the hydrobox is less than that between the mixing tank and the local system. | 1. Check settings and change as appropriate.<br>2. Check the battery power and replace if flat.<br>3. Relocate the temperature sensor to a more suitable room.<br>4. Check heat pump – consult outdoor unit service manual.<br>5. Check booster heater thermostat and press reset button if safe. Reset button is located on the side of booster heater, covered with white rubber cap. (See "5.5.1 Component parts" for position.)<br>6. Check the cause of the trip and reset if safe.<br>7. Check resistance across the thermal cut-out, if open then the connection is broken and the booster heater will have to be replaced. Contact your Mitsubishi Electric dealer.<br>8. Check the heat emitter surface area is adequate Increase size if necessary.<br>9. Check plumbing/wiring to 3-way valve.<br>10. Check the battery power and replace if flat.<br>11. Increase the flow rate between the mixing tank and the hydrobox or decrease that between the mixing tank and the local system. |
| 14 | Heating system does not reach the set lower temperature. | The heating system operates according to the heating pressure to prevent the low pressure system from frequent switching (ON/OFF) of the compressor. | Normal operation, no action necessary. |

| No. | Fault symptom | Possible cause | Explanation - Solution |
|---|---|---|---|
| 15 | In 2-zone temperature control, only Zone2 does not reach the set temperature. | 1. When Zone1 and Zone2 are both in heating mode, the hot water temperature in Zone2 does not exceed that in Zone1.<br>2. Faulty wiring of motorized mixing valve<br>3. Faulty installation of motorized mixing valve<br>4. Incorrect setting of Running time<br>5. Motorized mixing valve failure | 1. Normal operation, no action necessary.<br>2. Refer to "5.4.3 Wiring for 2-zone temperature control" in installation manual.<br>3. Check for correct installation. (Refer to the manual included with each motorized mixing valve.)<br>4. Check for correct setting of Running time.<br>5. Inspect the mixing valve. (Refer to the manual included with each motorized mixing valve.) |
| 16 | When a PUHZ-FRP outdoor unit is connected, DHW or Heating operation cannot run. | The outdoor unit is set to have operation of the indoor unit of air conditioner take precedence over that of the hydrobox, and in the main remote controller settings "Electric heater (Heating)" or "Electric heater (DHW)" is turned off. | Turn ON Electric heater (Heating) or Electric heater (DHW) using the main remote controller. |
| 17 | When a PUHZ-FRP outdoor unit is connected and is in heat recovery operation, the set temperature is not reached. | When the outdoor unit is set to have cooling operation of the indoor unit of air conditioner take precedence over that of the hydrobox, the outdoor unit controls the frequency of the compressor according to the load of air conditioner. The DHW and heating run according to that frequency. | Normal operation, no action necessary.<br>If Air-to-Water system is given priority in operation, comp Hz can be regulated depending on the load of DHW or Heating. For more details, refer to the PUHZ-FRP installation manual. |
| 18 | After DHW operation room temperature rises slightly. | At the end of the DHW mode operation the 3-way valve diverts hot water away from the DHW circuit into space heating circuit.<br>This is done to prevent the hydrobox components from overheating.<br>The amount of hot water directed into the space heating circuit varies according to the type of the system and of the pipe run between the plate heat exchanger and the hydrobox. | Normal operation, no action necessary. |
| 19 | The room temperature rises during DHW operation. | 3-way valve failure | Check the 3-way valve. |
| 20 | Water discharges from pressure relief valve.<br>(Primary circuit) | 1. If continual – pressure relief valve may be damaged.<br>2. If intermittent – expansion vessel charge may have reduced/bladder perished. | 1. Turn the handle on the pressure relief valve to check for foreign objects in it. If the problem is not still solved, replace the pressure relief valve with a new one.<br>2. Check pressure in expansion vessel.<br>Recharge to 1 bar if necessary.<br>If bladder perished, replace expansion vessel with a new one. |
| 21 | Water discharges from pressure relief valve (field supplied item).<br>(Sanitary circuit) | 1. If continual – field supplied pressure reducing valve not working.<br>2. If continual – pressure relief valve seat may be damaged.<br>3. If intermittent – expansion vessel charge may have reduced/bladder perished.<br>4. DHW tank may have subjected to backflow. | 1. Check function of pressure reducing valve and replace if necessary.<br>2. Turn the handle on the pressure relief valve to check for foreign objects inside. If the problem is not still solved, replace the pressure relief valve.<br>3. Check gas-side pressure in expansion vessel.<br>Recharge to correct precharge pressure if necessary.<br>If bladder perished, replace expansion vessel with a new one with appropriate pre-charge.<br>4. Check the pressure in DHW tank. If pressure in DHW tank is similar to that in the incoming mains, cold water supply that merges with incoming mains water supply could flow back to DHW tank. Investigate source of back-feed and rectify error in pipework/fitting configuration. Adjust pressure in cold supply. |
| 22 | Noisy water circulation pump | Air in water circulation pump | Use manual and automatic air vents to remove air from system.<br>Top up water if necessary to achieve 1 bar on primary circuit. |
| 23 | Noise during hot water draw off typically worse in the morning. | 1. Loose airing cupboard pipework<br>2. Heaters switching on/off | 1. Install extra pipe fastening clips.<br>2. Normal operation, no action necessary. |
| 24 | Mechanical noise heard coming from the hydrobox. | 1. Heaters switching on/off<br>2. 3-way valve changing position between DHW and heating mode | Normal operation, no action necessary. |
| 25 | Water circulation pump runs for a short time unexpectedly . | Water circulation pump jam prevention mechanism (routine) to inhibit the build-up of scale | Normal operation, no action necessary. |
| 26 | Milky/Cloudy water (Sanitary circuit) | Oxygenated water | Water from any pressurised system will release oxygen bubbles when water is running. The bubbles will settle out. |
| 27 | Heating mode has been on standby for a long time (does not start operation smoothly.) | The time of “Delay” set in “Economy settings for pump” is too short. (Go to “Service menu” → “Auxiliary settings” → “Economy settings for pump”). | Increase the time of “Delay” in “Economy settings for pump” . |

| No. | Fault symptom | Possible cause | Explanation - Solution |
|---|---|---|---|
| 28 | The hydrobox that was running in the heating mode before power failure is running in the DHW mode after power recovery. | The hydrobox is designed to run in an operation mode with a higher priority (i.e. DHW mode in this case) at power recovery. | • Normal operation, no action necessary.<br>• After the DHW max. operation time has elapsed or the DHW max. temperature has been reached, the DHW mode switches to the other mode (ex. Heating mode). |
| 29 | Cooling mode is NOT available. | DIP SW2-4 is OFF. | Turn DIP SW2-4 to ON. (Refer to “5.3 DIP switch functions”.) |
| 30 | The cooling system does not cool down to the set temperature. | 1. When the water in the circulation circuit is unduly hot, Cooling mode starts with a delay for the protection of the outdoor unit.<br>2. When the outdoor ambient temperature is lower than the preset temperature that activates the freeze stat. function, Cooling mode does not start running. | 1. Normal operation, no action necessary.<br>2. To run Cooling mode overriding the freeze stat. function, adjust the preset temperature that activates the freeze stat. function. (Refer to <Freeze stat function> in “5.7 System setup”.) |
| 31 | The electric heaters are activated shortly after DHW or LP mode starts running after Cooling mode. | The setting time period of Heat-pump-only operation is short. | Adjust the setting time period of Heat-pump only operation. (Refer to <Electric heater (DHW)> in “5.7 System setup”.) |
| 32 | During DHW or LP mode following the cooling mode, error L6 (circulation water freeze protection error ) occurs and the system stops all the operations. | The unit runs in Cooling mode when the outdoor ambient temperature is lower than 10ºC (outside of the guaranteed operating range).<br>(When defrosting operation is running at such a low outdoor ambient temperature after Cooling mode is switched to DHW or LP mode, the water temperature in the cooling circuit drops too low, which could result in L6 error to stop all the operations. | Do not run Cooling operation when the outdoor ambient temperature is lower than 10ºC.<br>To automatically stop or recover only Cooling operation and keep other operations running, the freeze stat. function can be used. Set the preset temperature that activates the freeze stat. function to adjust the outdoor ambient temperature as follows. (Refer to <Freeze stat function> in “5.7 System setup”.)<br><br>**Outdoor ambient temperature** / **Cooling operation**<br>3ºC higher than the preset temperature / Stop<br>5ºC higher than the preset temperature / Recover |
| 33 | The energy monitor value seems not correct.<br><br>Note:<br>There could be some discrepancies between the actual and the calculated values.<br>If you seek for accuracy, please make sure to connect power meter(s) and heat meter to FTC board. Both should be locally supplied. | 1. Incorrect setting of the energy monitor<br>2. Non-connectable type of external meter (local supply) is connected.<br>3. External meter (local supply) failure<br>4. FTC board failure | 1. Check the setting by following the procedure below.<br>(1) Check if the DIP switch is set as the table below.<br>Consumed electric energy<br>SW3-4 / Electric energy meter (Local supply)<br>OFF / Without<br>ON / With<br>Delivered heat energy<br>SW3-8 / Heat meter (Local supply)<br>OFF / Without<br>ON / With<br>(2) In the case external electric energy meter and/or heat meter is not used, check if the setting for electric heater and water pump(s) input is correct by referring to <Energy monitor setting> in “5.7 System setup”.<br>(3) In the case external electric energy meter and/or heat meter is used, check if the unit of output pulse on external meter matches with the one set at the main remote controller by referring to <Energy monitor setting> in “5.7 System setup”.<br>2. Check if the external meter (local supply) is connectable type by referring to <Energy monitor setting> in “5.7 System setup”.<br>3. Check if signal is sent to IN8 to IN10 properly. (Refer to “5.2 Wiring diagrams”.)<br>Replace the external heat meter if defective.<br>4. Check the FTC control board.<br>• Check for faulty wiring.<br>• If no problem found with the wiring, the FTC control board is faulty. Replace the board. |
| 34 | Heat pump is forced to turn ON and OFF. | Smart grid ready input (IN11 and IN12) is used, and switch-on and off commands are input. | Normal operation, no action necessary. |

## Annual Maintenance

It is essential that the hydrobox is serviced at least once a year by a qualified individual any spare parts required MUST be purchased from Mitsubishi Electric (safety matter).

**NEVER** bypass safety devices or operate the unit without them being fully operational.

**<Annual maintenance points>**

Use the Annual Maintenance Log Book as a guide to carrying out the necessary checks on the indoor and outdoor unit.

## ■ Error Codes

| Code | Error | Action |
|---|---|---|
| L3 | Circulation water temperature overheat protection | Flow rate may be reduced. Check for;<br>• Water leakage<br>• Strainer blockage<br>• Water circulation pump function (Error code may display during filling of primary circuit, complete filling and reset error code.) |
| L4 | DHW tank water temperature overheat protection | Check the immersion heater and it's contactor. |
| L5 | Indoor unit temperature thermistor (THW1, THW2, THW5B, THW6, THW7, THW8, THW9) failure | Check resistance across the thermistor. |
| L6 | Circulation water freeze protection | See Action for L3. |
| L8 | Heating operation error | Check and re-attach any thermistors that may have become dislodged. |
| L9 | Low primary circuit flow rate detected by flow sensor or flow switch (flow switches 1, 2, 3) | See Action for L3. If the flow sensor or flow switch itself does not work, replace it.<br>**Caution: The pump valves may be hot, please take care.** |
| LA | Pressure sensor failure | Check pressure sensor cable for damage or loose connections. |
| LB | High pressure protection | • Flow rate of the heating circuit may be reduced. Check water circuit.<br>• Plate heat exchanger may be clogged. Check the plate heat exchanger.<br>• Outdoor unit failure. Check refrigerant volume, valve, LEV coil and pipe crushing of outdoor unit. |
| LC | Boiler circulation water temperature overheat protection | Check if the setting temperature of the Boiler for heating exceeds the restriction. (See the manual of the thermistors "PAC-TH012HT-E")<br>Flow rate of the heating circuit from the boiler may be reduced. Check for<br>• water leakage<br>• strainer blockage<br>• water circulation pump function |
| LD | Boiler temperature thermistor (THWB1) failure | Check resistance across the thermistor. |
| LE | Boiler operation error | See Action for L8. Check the status of the boiler. |
| LF | Flow sensor failure | Check flow sensor cable for damage or loose connections. |
| LH | Boiler circulation water freeze protection | Flow rate of the heating circuit from the boiler may be reduced. Check for<br>• water leakage<br>• strainer blockage<br>• water circulation pump function |
| LJ | DHW operation error (type of external plate HEX) | Check for disconnection of DHW tank water temp. thermistor (THW5B).<br>Flow rate of the sanitary circuit may be reduced.<br>Check for water circulation pump function. (primary / sanitary) |
| LL | Setting errors of DIP switches on FTC control board | For boiler operation, check that DIP SW1-1 is set to ON (With Boiler) and DIP SW2-6 is set to ON (With Mixing Tank).<br>For 2-zone temperature control, check DIP SW2-7 is set to ON (2-zone) and DIP SW2-6 is set to ON (With Mixing Tank). |
| LP | Out of water flow rate range for outdoor heat pump unit | Check the installation Table 5.6.3<br>Check remote controller settings (Service menu / heat pump flow rate range)<br>See Action for L3. |
| P1 | Thermistor (Room temp.) (TH1) failure | Check resistance across the thermistor. |
| P2 | Thermistor (Ref. liquid temp.) (TH2) failure | Check resistance across the thermistor. |
| P6 | Anti-freeze protection of plate heat exchanger | See Action for L3.<br>Check for correct amount of refrigerant. |
| J0 | Communication failure between FTC and wireless receiver | Check connection cable for damage or loose connections. |
| J1 - J8 | Communication failure between wireless receiver and wireless remote controller | Check wireless remote controller's battery is not flat.<br>Check the pairing between wireless receiver to wireless remote controller.<br>Test the wireless communication. (See the manual of wireless system) |
| E0 - E5 | Communication failure between main remote controller and FTC | Check connection cable for damage or loose connections. |
| E6 - EF | Communication failure between FTC and outdoor unit | Check that the outdoor unit has not been turned off.<br>Check connection cable for damage or loose connections.<br>Refer to outdoor unit service manual. |
| E9 | Outdoor unit receives no signal from indoor unit. | Check both units are switched on. Check connection cable for damage or loose connections. Refer to outdoor unit service manual. |
| EE | Combination error between FTC and outdoor unit | Check combination of FTC and outdoor unit. |
| U*, F* | Outdoor unit failure | Refer to outdoor unit service manual. |
| A* | M-NET communication error | Refer to outdoor unit service manual. |

**Note: To cancel error codes please switch system off (Press button F4(RESET) on main remote controller).**

## ■ Engineers Forms

Should settings be changed from default, please enter and record new setting in 'Field Setting' column. This will ease resetting in the future should the system use change or the circuit board need to be replaced.

**Commissioning/Field settings record sheet**

| Main remote controller screen | | | | Parameters | Default setting | Field setting | Notes |
|---|---|---|---|---|---|---|---|
| Main | | | Zone1 heating room temp. | 10°C to 30°C | 20°C | | |
| | | | Zone2 heating room temp. *1 | 10°C to 30°C | 20°C | | |
| | | | Zone1 heating flow temp. | 20°C to 60°C | 45°C | | |
| | | | Zone2 heating flow temp. *2 | 20°C to 60°C | 35°C | | |
| | | | Zone1 cooling flow temp. *3 | 5°C to 25°C | 15°C | | |
| | | | Zone2 cooling flow temp. *3 | 5°C to 25°C | 20°C | | |
| | | | Zone1 heating compensation curve | −9°C to + 9°C | 0°C | | |
| | | | Zone2 heating compensation curve *2 | −9°C to + 9°C | 0°C | | |
| | | | Holiday mode | Active/Non active/Set time | — | | |
| Option | | | Forced DHW operation | On/Off | — | | |
| | | | DHW | On/Off/Timer | On | | |
| | | | Heating/Cooling | On/Off/Timer | On | | |
| | | | Energy monitor | Consumed electrical energy/Delivered energy | — | | |
| Setting | DHW *4 | | Operation mode | Normal/Eco *5 | Normal | | |
| | | | DHW max. temp. | 40°C to 60°C *6 | 50°C | | |
| | | | DHW temp. drop | 5°C to 30°C | 10°C | | |
| | | | DHW max. operation time | 30 to 120 min | 60 min | | |
| | | | DHW mode restriction | 30 to 120 min | 30 min | | |
| | | | DHW recharge | Large/Standard | Large *7 | | |
| | Legionella prevention *4 | | Active | Yes/No | Yes | | |
| | | | Hot water temp. | 60°C to 70°C *6 | 65°C | | |
| | | | Frequency | 1 to 30 days | 15 days | | |
| | | | Start time | 00.00 to 23.00 | 03.00 | | |
| | | | Max. operation time | 1 to 5 hours | 3 hours | | |
| | | | Duration of maximum temp. | 1 to 120 min | 30 min | | |
| | Heating/ Cooling *3 | | Zone1 operation mode | Heating room temp./ Heating flow temp./ Heating compensation curve/ Cooling flow temp. | Room temp. | | |
| | | | Zone2 operation mode *2 | Heating room temp./ Heating flow temp./ Heating compensation curve/ Cooling flow temp. | Compensation curve | | |
| | Compensation curve | Hi flow temp. set point | Zone1 outdoor ambient temp. | −30°C to +33°C *8 | −15°C | | |
| | | | Zone1 flow temp. | 20°C to 60°C | 50°C | | |
| | | | Zone2 outdoor ambient temp. *2 | −30°C to +33°C *8 | −15°C | | |
| | | | Zone2 flow temp. *2 | 20°C to 60°C | 40°C | | |
| | | Lo flow temp. set point | Zone1 outdoor ambient temp. | −28°C to +35°C *9 | 35°C | | |
| | | | Zone1 flow temp. | 20°C to 60°C | 25°C | | |
| | | | Zone2 outdoor ambient temp. *2 | −28°C to +35°C *9 | 35°C | | |
| | | | Zone2 flow temp. *2 | 20°C to 60°C | 25°C | | |
| | | Adjust | Zone1 outdoor ambient temp. | −29°C to +34°C *10 | — | | |
| | | | Zone1 flow temp. | 20°C to 60°C | — | | |
| | | | Zone2 outdoor ambient temp. *2 | −29°C to +34°C *10 | — | | |
| | | | Zone2 flow temp. *2 | 20°C to 60°C | — | | |
| | Holiday | | DHW *4 | Active/Non active | Non active | | |
| | | | Heating/ Cooling *3 | Active/Non active | Active | | |
| | | | Zone1 heating room temp. | 10°C to 30°C | 15°C | | |
| | | | Zone2 heating room temp. *1 | 10°C to 30°C | 15°C | | |
| | | | Zone1 heating flow temp. | 20°C to 60°C | 35°C | | |
| | | | Zone2 heating flow temp. *2 | 20°C to 60°C | 25°C | | |
| | | | Zone1 cooling flow temp. *3 | 5°C to 25°C | 25°C | | |
| | | | Zone2 cooling flow temp. *3 | 5°C to 25°C | 25°C | | |

## ■ Engineers Forms

**Commissioning/Field settings record sheet**

| Main remote controller screen | | | | | Parameters | | Default setting | Field setting | Notes |
|---|---|---|---|---|---|---|---|---|---|
| Setting | Initial settings | Language | | | EN/FR/DE/SV/ES/IT/DA/NL/FI/NO/PT/BG/PL/CZ/RU/TR/SL | | EN | | |
| | | °C/°F | | | °C/°F | | °C | | |
| | | Summer time | | | On/Off | | Off | | |
| | | Temp. display | | | Room/DHW tank/Room&DHW tank /Off | | Off | | |
| | | Time display | | | hh:mm/hh:mm AM/AM hh:mm | | hh:mm | | |
| | | Room sensor settings for Zone1 | | | TH1/Main RC/Room RC1-8/“Time/Zone” | | TH1 | | |
| | | Room sensor settings for Zone2 *2 | | | TH1/Main RC/Room RC1-8/“Time/Zone” | | TH1 | | |
| | | Room RC zone select *2 | | | Zone1/Zone2 | | Zone1 | | |
| | Service menu | Thermistor adjustment | THW1 | | −10°C to +10°C | | 0°C | | |
| | | | THW2 | | −10°C to +10°C | | 0°C | | |
| | | | THW5B | | −10°C to +10°C | | 0°C | | |
| | | | THW6 | | −10°C to +10°C | | 0°C | | |
| | | | THW7 | | −10°C to +10°C | | 0°C | | |
| | | | THW8 | | −10°C to +10°C | | 0°C | | |
| | | | THW9 | | −10°C to +10°C | | 0°C | | |
| | | | THW10 | | −10°C to +10°C | | 0°C | | |
| | | | THWB1 | | −10°C to +10°C | | 0°C | | |
| | | Auxiliary settings | Economy settings for pump. | | On/Off *11 | | On | | |
| | | | | | Delay (3 to 60 min) | | 10 min | | |
| | | | Electric heater (Heating) | | Space heating: On (used)/Off (not used) | | On | | |
| | | | | | Electric heater delay timer (5 to 180 min) | | 30 min | | |
| | | | Electric heater (DHW) *4 | | Booster heater | DHW: On (used)/Off (not used) | On | | |
| | | | | | Immersion heater | DHW: On (used)/Off (not used) | On | | |
| | | | | | Electric heater delay timer (15 to 30 min) | | 15 min | | |
| | | | Mixing valve control | | Running (10 to 240 sec) | | 120 sec | | |
| | | | | | Interval (1 to 30 min) | | 2 min | | |
| | | | Flow sensor *12 | | Minimum (0 to 100L/min) | | 5 L/min | | |
| | | | | | Maximum (0 to 100L/min) | | 100 L/min | | |
| | | | Analog output | | Interval (1 to 30 min) | | 5 min | | |
| | | | | | Priority (Normal/High) | | Normal | | |
| | | Pump speed | DHW | | Pump speed (1 to 5) | | 5 | | |
| | | | Heating/Cooling | | Pump speed (1 to 5) | | 5 | | |
| | | Heat source setting | | | Standard/Heater/Boiler/Hybrid *13 | | Standard | | |
| | | Heat pump setting | Heat pump flow rate range | | Minimum (0 to 100L/min) | | 5 L/min | | |
| | | | | | Maximum (0 to 100L/min) | | 100 L/min | | |
| | | | Quiet mode | | Day (Mon to Sun) | | — | | |
| | | | | | Time | | 0:00 - 23:45 | | |
| | | | | | Quiet level (Normal/ Level1/ Level2) | | Normal | | |
| | | Operation settings | Heating operation | Flow temp.range *15 | Min.temp.(20 to 45°C) | | 30°C | | |
| | | | | | Max.temp.(35 to 60°C) | | 50°C | | |
| | | | | Room temp. control *16 | Mode(Normal/Fast) | | Normal | | |
| | | | | | Interval(10 to 60 min) | | 10 min | | |
| | | | | Heat pump thermo diff.adjust | On/Off *11 | | On | | |
| | | | | | Lower limit (−9 to −1°C) | | −5°C | | |
| | | | | | Upper limit (+3 to +5°C) | | 5°C | | |
| | | | Freeze stat function *17 | | Outdoor ambient temp. (3 to 20°C) / ** | | 5°C | | |
| | | | Simultaneous operation (DHW/ Heating) | | On/Off *11 | | Off | | |
| | | | | | Outdoor ambient temp. (−30 to +10°C) *8 | | −15°C | | |
| | | | Cold weather function | | On/Off *11 | | Off | | |
| | | | | | Outdoor ambient temp. (−30 to −10°C) *8 | | −15°C | | |
| | | | Boiler operation | | Hybrid settings | Outdoor ambient temp. (−30 to +10°C) *8 | −15°C | | |
| | | | | | | Priority mode (Ambient/Cost/$CO_2$) *18 | Ambient | | |
| | | | | | | Outdoor ambient temp. rise (+1 to +5 °C) | +3 °C | | |
| | | | | | Intelligent settings | Energy price *19 | Electricity (0.001 to 999 */kWh) | 0.5 */kWh | |
| | | | | | | | Boiler (0.001 to 999 */kWh) | 0.5 */kWh | |
| | | | | | | $CO_2$ emis-sion | Electricity (0.001 to 999 kg -$CO_2$/kWh) | 0.5 kg -$CO_2$/ kWh | |
| | | | | | | | Boiler (0.001 to 999 kg -$CO_2$/kWh) | 0.5 kg -$CO_2$/ kWh | |
| | | | | | | Heat source | Heat pump capacity (1 to 40 kW) | 11.2 kW | |
| | | | | | | | Boiler efficiency (25 to 150%) | 80% | |
| | | | | | | | Booster heater 1 capacity (0 to 30 kW) | 2 kW | |
| | | | | | | | Booster heater 2 capacity (0 to 30 kW) | 4 kW | |

## ■ Engineers Forms

**Commissioning/Field settings record sheet (continued from the previous page)**

| Main remote controller screen | | | | | Parameters | | Default setting | Field setting | Notes |
|---|---|---|---|---|---|---|---|---|---|
| | Service menu | Operation settings | Smart grid ready | DHW | On/Off | | Off | | |
| | | | | | Target temp(+1 to +20°C) / -- (Non active) | | -- | | |
| | | | | Heating | On/Off | | Off | | |
| | | | | | Target temp. | Switch-on recommendation (20 to 60°C) | 50°C | | |
| | | | | | | Switch-on command (20 to 60°C) | 55°C | | |
| | | | | Cooling | On/Off | | Off | | |
| | | | | | Target temp. | Switch-on recommendation (5 to 25°C) | 15°C | | |
| | | | | | | Switch-on command (5 to 25°C) | 10°C | | |
| | | | | Pump cycles | Heating (On/Off) | | On | | |
| | | | | | Cooling (On/Off) | | On | | |
| | | | | | Interval (10 to 120 min) | | 10 min | | |
| | | | Floor dry up function | | On/Off *11 | | Off | | |
| | | | | | Target temp. | Start&Finish (20 to 60°C) | 30°C | | |
| | | | | | | Max. temp. (20 to 60°C) | 45°C | | |
| | | | | | | Max. temp. period (1 to 20 days) | 5 days | | |
| | | | | | Flow temp. (Increase) | Temp. increase step (+1 to +10°C) | +5°C | | |
| | | | | | | Increase interval (1 to 7 days) | 2 days | | |
| | | | | | Flow temp. (Decrease) | Temp. decrease step (−1 to −10°C) | −5°C | | |
| | | | | | | Decrease interval (1 to 7 days) | 2 days | | |
| | | | Summer mode | | On/Off | | Off | | |
| | | | | | Outdoor ambi-ent temp. | Heating ON (4 to 19°C) | 10°C | | |
| | | | | | | Heating OFF (5 to 20°C) | 15°C | | |
| | | | | | Judgement time | Heating ON (1 to 48 hours) | 6 hours | | |
| | | | | | | Heating OFF (1 to 48 hours) | 6 hours | | |
| | | | | | Forced heating ON (-30 to 10°C) | | 5 °C | | |
| | | | Water flow control | | On/Off | | Off | | |
| | | Energy monitor settings | Electric heater capacity | Booster heater 1 capacity | 0 to 30 kW | | 2 kW | | |
| | | | | Booster heater 2 capacity | 0 to 30 kW | | 4 kW | | |
| | | | | Immersion heater capacity | 0 to 30 kW | | 0 kW | | |
| | | | | Analog output | 0 to 30 kW | | 0 kW | | |
| | | | Delivered energy adjustment | | −50 to +50% | | 0% | | |
| | | | Water pump input | Pump 1 | 0 to 200 W or ***(factory fitted pump) | | *** | | |
| | | | | Pump 2 | 0 to 200 W | | 0 W | | |
| | | | | Pump 3 | 0 to 200 W | | 0 W | | |
| | | | | Pump 4 *7 | 0 to 200 W | | 72 W | | |
| | | | Electric energy meter *14 | | 0.1/1/10/100/1000 pulse/kWh | | 1000 pulse/kWh | | |
| | | | Heat meter *14 | | 0.1/1/10/100/1000 pulse/kWh | | 1000 pulse/kWh | | |
| | | External in-put settings | Demand control (IN4) | | Heat source OFF/Boiler operation | | Boiler operation | | |
| | | | Outdoor thermostat (IN5) | | Heater operation/Boiler operation | | Boiler operation | | |
| | | Thermo ON output | | | Zone1/Zone2/Zone1&2 | | Zone1&2 | | |

*1 The settings related to Zone2 can be switched only when 2-zone temperature control or 2-zone valve ON/OFF control is active.
*2 The settings related to Zone2 can be switched only when 2 Zone temperature control is enabled (when DIP SW2-6 and SW 2-7 are ON).
*3 Cooling mode settings are available for ERS* model only.
*4 Only available if DHW tank present in system.
*5 When the hydrobox is connected with a PUMY-P outdoor unit, the mode is fixed to “Normal”.
*6 For the model without both booster and immersion heater, it may not reach the set temperature depending on the outside ambient temperature.
*7 This setting is valid for only cylinder units.
*8 The lower limit is -15°C depending on the connected outdoor unit.
*9 The lower limit is -13°C depending on the connected outdoor unit.
*10 The lower limit is -14°C depending on the connected outdoor unit.
*11 On: the function is active; Off: the function is inactive.
*12 Do not change the setting since it is set according to the specification of flow sensor attached to the hydrobox.
*13 When DIP SW1-1 is set to OFF “WITHOUT Boiler” or SW2-6 is set to OFF “WITHOUT Mixing tank”, neither Boiler nor Hybrid can be selected.
*14 The default setting is 1 pulse/kWh depending on the connected indoor unit.
*15 Valid only when operating in Heating room temperature.
*16 When DIP SW5-2 is set to OFF, the function is active.
*17 If asterisk (**) is chosen freeze stat function is deactivated. (i.e. primary water freeze risk)
*18 When the hydrobox is connected with a PUMY-P outdoor unit, the mode is fixed to “Ambient”.
*19 “*” of “*/kWh” represents currency unit (e.g. € or £ or the like)

## ■ Refrigerant collecting (pumpdown) for split model systems only

Refer to “Refrigerant collection” in the outdoor unit installation manual or service manual.

## ■ Back-up operation of boiler

Heating operation is backed up by boiler.
For more details, refer to the installation manual of PAC-TH012HT-E.

**<Installation & System set up>**
1. Set DIP-SW 1-1 to ON "With boiler" and SW2-6 to ON “With Mixing tank”.
2. Install the thermistor THWB1 (Flow temp.) *1 on the boiler circuit.
3. Connect the output wire (OUT10: Boiler operation) to the signal input (room thermostat input) on the boiler. *2
4. Install one of the following room temp. thermostats. *3

- Wireless remote controller (option)
- Room temp. thermostat (local supply)
- Main remote controller (remote position)

**<Main remote controller settings>**
1. Go to Service menu > Heat source setting and choose “Boiler” or “Hybrid”. *4
2. Go to Service menu > Operation settings > Boiler settings to make detailed settings for “Hybrid” above.

*1 The boiler temperature thermistor is an optional part.
*2 OUT10 has no voltage across it.
*3 Boiler heating is controlled on/off by the room temp. thermostat.
*4 The “Hybrid” automatically switches heat sources between Heat pump (and Electric heater) and boiler.

## ■ Multiple outdoor units control

To realize bigger systems by using multiple outdoor units, up to 6 units of the same model can by connected.
The hydrobox can be used as a sub unit for multiple outdoor unit control.
For more details, refer to the installation manual of PAC-IF071/072B-E.
PAC-IF061/062B-E can not be connected to the hydrobox.
Check the model name of connecting main unit.

**<DIP switch setting>**
- Set DIP SW4-1 to ON “Active: multiple outdoor unit control”.
- Keep DIP SW4-2 OFF (default setting) (main/sub setting: sub).
- Set DIP SW1-3 to ON when the hydrobox is connected to a DHW tank.

Note : PUHZ-FRP/PUMY-P outdoor unit is not available for multiple outdoor units control.

## ■ Product fiche of temperature control

(a) Supplier’s name: MITSUBISHI ELECTRIC CORPORATION
(b) Supplier’s model identifier: PAR-WT50R-E and PAR-WR51R-E
(c) The class of the temperature control: Ⅵ
(d) The contribution of the temperature control to seasonal space heating energy efficiency: 4%

## 6.1. Outlines and dimensions

### 6.1.1 Technical Drawings

<Unit: mm>

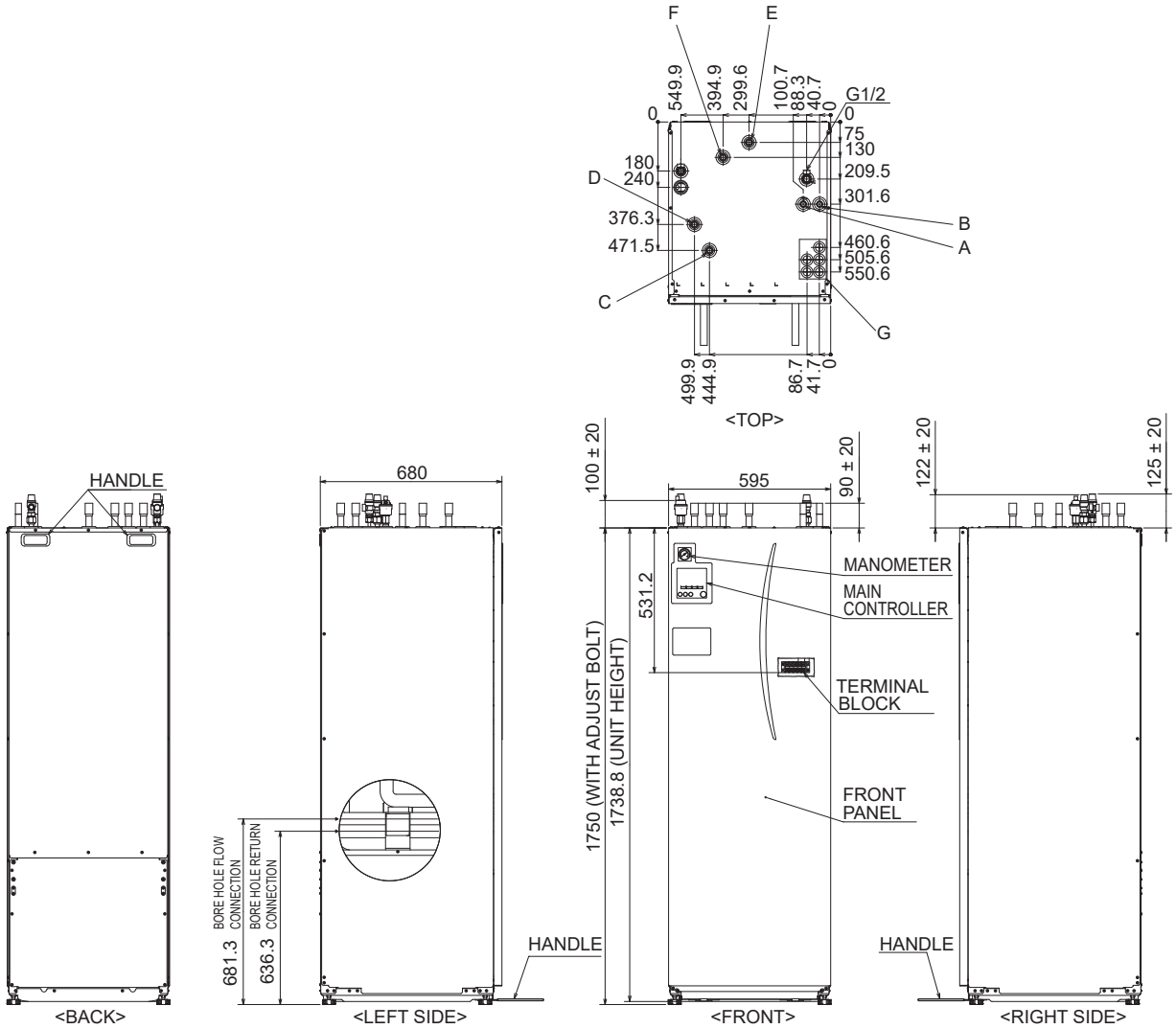


| Letter | Pipe description | Connection size/type |
|---|---|---|
| A | DHW outlet connection | 22 mm/Compression |
| B | Cold water inlet connection | 22 mm/Compression |
| C | Space heating return connection | 28 mm/Compression |
| D | Space heating flow connection | 28 mm/Compression |
| E | Brine pipe (Bore hole return connection) | 28 mm/Compression |
| F | Brine pipe (Bore hole flow connection) | 28 mm/Compression |
| G | Electrical cable inlets<br>③<br>①④<br>②⑤ | For inlets ① and ②, run low-voltage wires including external input wires and thermistor wires. For inlets ③, ④ and ⑤, run high-voltage wires including power cable, and external output wires.<br>*For a wireless receiver (option) cable and ecodan Wi-Fi interface (option) cable, use inlet ①. |

<Table 6.1.1>

## ■ Service access diagrams

| Service access | |
|---|---|
| Parameter | Dimension (mm) |
| a | 300 |
| b | 150 |
| c (distance behind unit not visible in Figure 6.1.2) | 10 |
| d | 700** |
| e | 150* |

<Table 6.1.2>

* An additional space is required, when brine pipe connecting to the side.
** Including Module removal space service

Sufficient space MUST be left for the provision of discharge pipework as detailed in National and Local Building Regulations.

The heat pump unit must be located indoors and in a frost-free environment, for example in a utility room, to minimise heat loss from stored water.

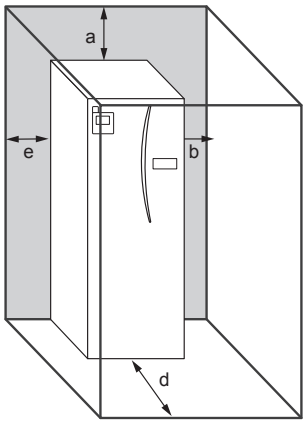


<Figure 6.1.2>
Service access

## 6.2. Wiring diagrams

### ■ EHGT17D-YM9ED

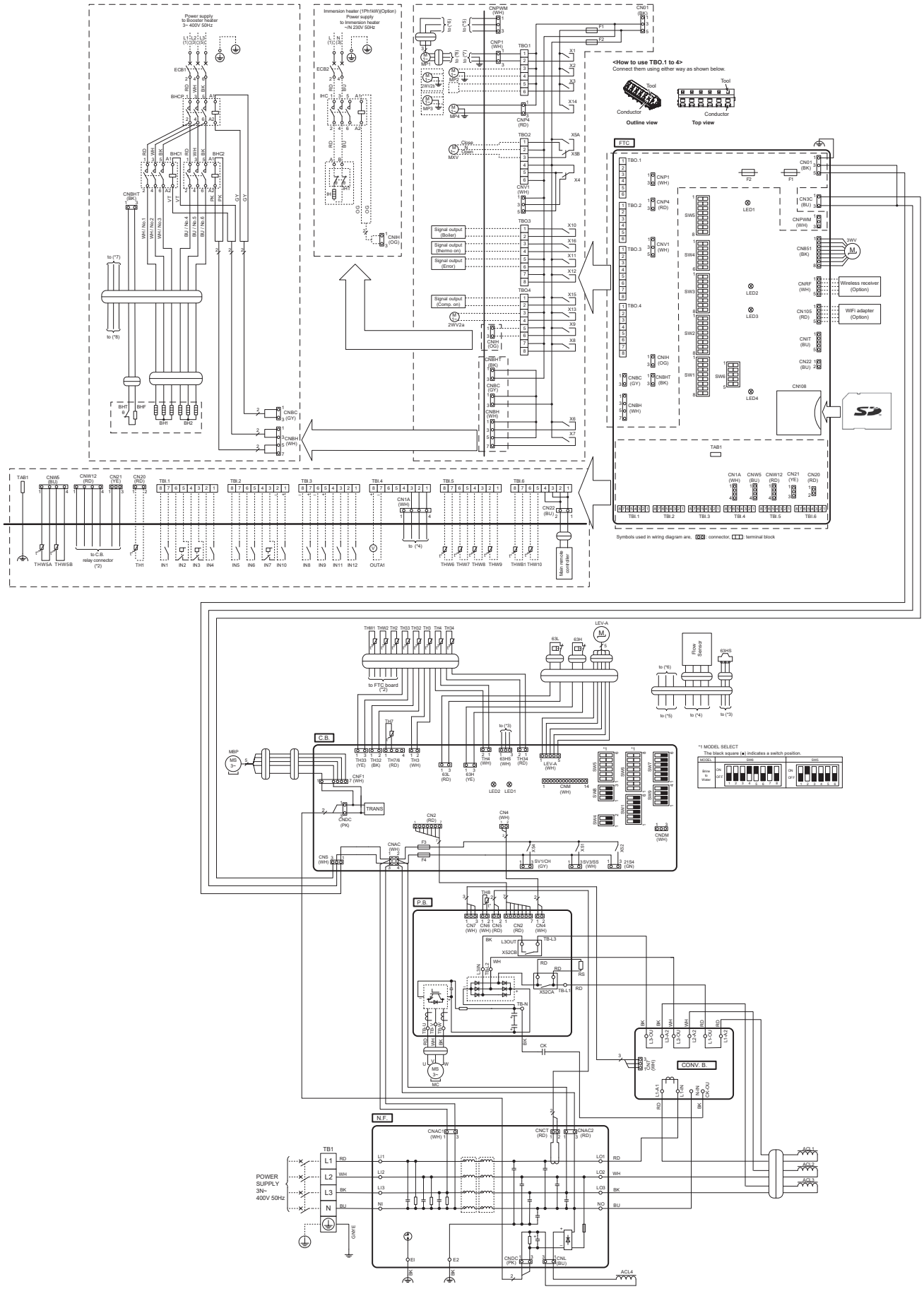


Cylinder unit/ Hydrobox/GSHP/WTW

## 6.3. DIP Switch Function(FTC)

Located on the FTC printed circuit board are 6 sets of small white switches known as DIP switches. The DIP switch number is printed on the circuit board next to the relevant switches. The word ON is printed on the circuit board and on the DIP switch block itself. To move the switch you will need to use a pin or the corner of a thin metal ruler or similar.

DIP switch settings are listed below in Table 6.3.1.
Only an authorised installer can change DIP switch setting under one's own responsibility according to the installation condition. Make sure to turn off heat pump unit power supplies before changing the switch settings.

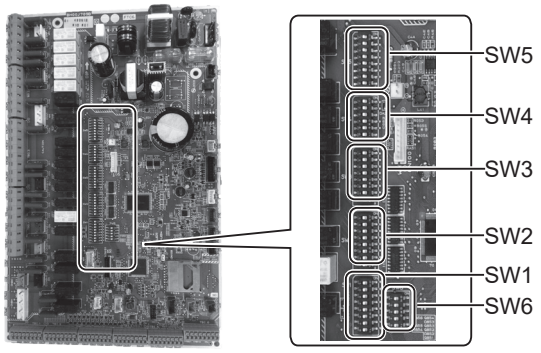


<Figure 6.3.1>

| DIP switch | | Function | OFF | ON | Default settings |
|---|---|---|---|---|---|
| SW1 | SW1-1 | Boiler | WITHOUT Boiler | WITH Boiler | OFF |
| | SW1-2 | Heat pump maximum outlet water temperature | 55ºC | 60ºC | ON |
| | SW1-3 | DHW tank | WITHOUT DHW tank | WITH DHW tank | ON |
| | SW1-4 | Immersion heater | WITHOUT Immersion heater | WITH Immersion heater | OFF |
| | SW1-5 | Booster heater | WITHOUT Booster heater | WITH Booster heater | ON |
| | SW1-6 | Booster heater function | For heating only | For heating and DHW | ON |
| | SW1-7 | — | — | — | OFF |
| | SW1-8 | Wireless remote controller | WITHOUT Wireless remote controller | WITH Wireless remote controller | OFF |
| SW2 | SW2-1 | Room thermostat1 input (IN1) logic change | Zone1 operation stop at thermostat short | Zone1 operation stop at thermostat open | OFF |
| | SW2-2 | Flow switch1 input (IN2) logic change | Failure detection at short | Failure detection at open | OFF |
| | SW2-3 | Booster heater capacity restriction | Inactive | Active | OFF |
| | SW2-4 | — | — | — | OFF |
| | SW2-5 | Automatic switch to backup heat source operation (When compressor stops by error) | Inactive | Active *1 | OFF |
| | SW2-6 | Mixing tank | WITHOUT Mixing tank | WITH Mixing tank | OFF |
| | SW2-7 | 2-zone temperature control | Inactive | Active *4 | OFF |
| | SW2-8 | — | — | — | ON |
| SW3 | SW3-1 | Room thermostat 2 input (IN6) logic change | Zone2 operation stop at thermostat short | Zone2 operation stop at thermostat open | OFF |
| | SW3-2 | Flow switch 2,3 input (IN3,7) logic change | Failure detection at short | Failure detection at open | OFF |
| | SW3-3 | — | — | — | ON |
| | SW3-4 | Electric energy meter | WITHOUT Electric energy meter | WITH Electric energy meter | OFF |
| | SW3-5 | — | — | — | OFF |
| | SW3-6 | 2-zone valve ON/OFF control | Inactive | Active | OFF |
| | SW3-7 | — | — | — | ON |
| | SW3-8 | Heat meter | WITHOUT Heat meter | WITH Heat meter | OFF |
| SW4 | SW4-1 | — | — | — | OFF |
| | SW4-2 | — | — | — | OFF |
| | SW4-3 | — | — | — | OFF |
| | SW4-4 | Water circuit only operation (during installation work) *2 | Inactive | Active | OFF |
| | SW4-5 | Emergency mode (Heater only operation) | Normal | Emergency mode (Heater only operation) | OFF *3 |
| | SW4-6 | Emergency mode (Boiler operation) | Normal | Emergency mode (Boiler operation) | OFF *3 |
| SW5 | SW5-1 | — | — | — | OFF |
| | SW5-2 | Advanced auto adaptation | Inactive | Active | ON |
| | SW5-3 | Capacity code | — | — | ON |
| | SW5-4 | | — | — | OFF |
| | SW5-5 | | — | — | OFF |
| | SW5-6 | | — | — | ON |
| | SW5-7 | | — | — | OFF |
| | SW5-8 | — | — | — | OFF |
| SW6 | SW6-1 | — | — | — | OFF |
| | SW6-2 | — | — | — | OFF |
| | SW6-3 | — | — | — | OFF |
| | SW6-4 | Analog output signal (0-10V) | Inactive | Active | OFF |
| | SW6-5 | Model select | Air to Water | Brine to Water | ON |

<Table 6.3.1>

**Note:** ***1. External output (OUT11) will be available. For safety reasons, this function is not available for certain errors. (In that case, system operation must be stopped and only the water circulation pump keeps running.)**
***2. Space heating and DHW can be operated only in water circuit, like an electric boiler. (Refer to "6.4.4 Water circuit only operation". )**
***3. If emergency mode is no longer required, return the switch to OFF position.**
***4. Active only when SW3-6 is set to OFF.**

## 6.4. Field wiring

### 6.4.1 Electrical Connection

All electrical work should be carried out by a suitably qualified technician. Failure to comply with this could lead to electrocution, fire, and death. It will also invalidate product warranty. All wiring should be according to national wiring regulations.

| Breaker abbreviation | Meaning |
|---|---|
| ECB1 | Earth leakage circuit breaker for booster heater |
| ECB2 | Earth leakage circuit breaker for immersion heater (Option) |
| TB1 | Terminal block 1 |

Connections should be made to the terminals indicated in the figures.

Booster heater and immersion heater should be connected independently from one another to dedicated power supplies.

Ⓐ Locally supplied wiring should be inserted through the inlets situated on the top of the heat pump unit. (Refer to <Table 6.1.1>.)
Ⓑ Wiring should be fed down the back right hand side of the control and electrical box.
Ⓒ The wires should be inserted individually through the cable inlets as below.
Ⓓ Connect the power cable for the booster heater to ECB1.

- Avoid contact between wiring and parts ( ∗ ).
- Make sure that ECB1 is ON.

Ⓔ The wires should be fixed with the cable straps as below
- Booster heater and immersion heater cables should use the cable strap ①, ⑦.
- Output cables should use the cable strap ②, ④, ⑧.
- Input cables should use the cable strap ③, ⑤.
- Power cables should use the cable strap ⑥.

Ⓕ On completion of wiring ensure main remote controller cable is connected to the relay connector.



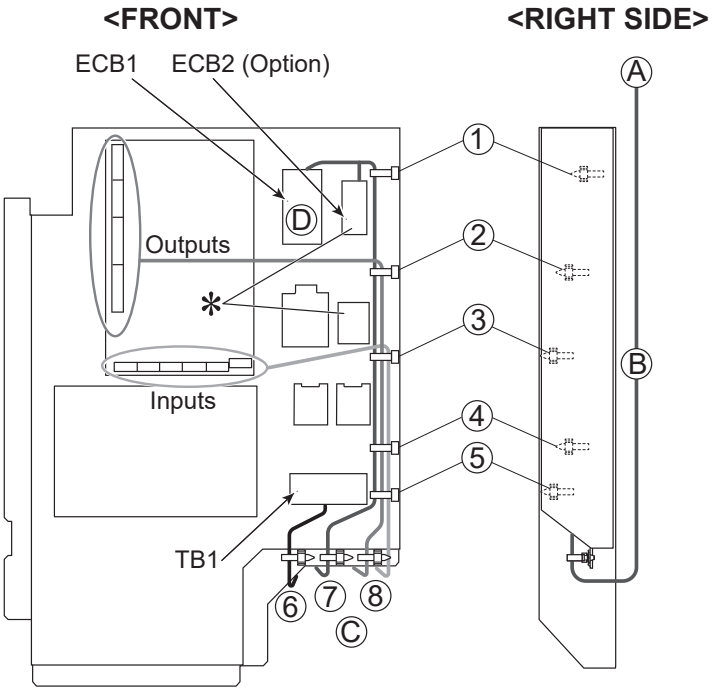


<Figure 6.4.1>

Affix label A that is included with the manuals near each wiring diagram for heat pump units.

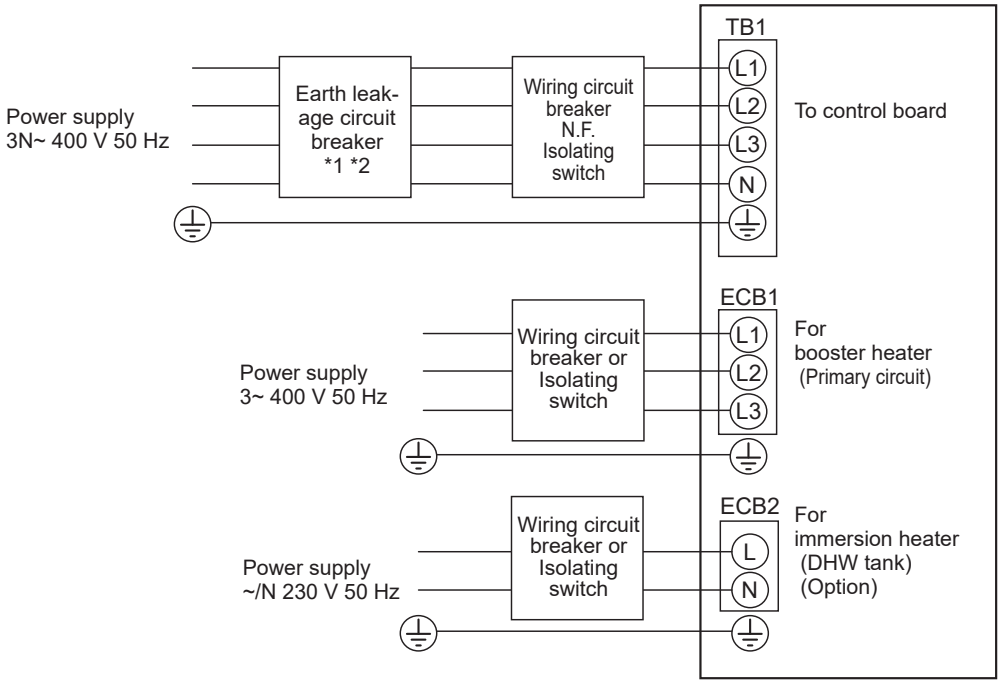


<Figure 6.4.2>
Electrical connections 3 phase

| Description | Power supply | Capacity | Breaker | Wiring *4 |
|---|---|---|---|---|
| Booster heater (Primary circuit) | 3~ 400 V 50 Hz | 9 kW | 16 A *2 | 2.5 mm² |
| Immersion heater (DHW tank) (Option) | ~/N 230 V 50 Hz | 1 kW | 16 A *2 | 2.5 mm² |

| | | |
|---|---|---|
| Ground source unit power supply | | 3N~ 400 V 50 Hz |
| Ground source unit circuit breaker capacity | *2 | 16 A |
| Wiring No. × size (mm²) | Ground source unit power supply, earth *4 | 5 × Min. 1.5 |
| Circuit rating | Ground source unit L1-N, L2-N, L3-N *3 | 230 V AC |

*1. If the installed earth leakage circuit breaker does not have an over-current protection function, install a breaker with that function along the same power line.
*2. A breaker with at least 3.0 mm contact separation in each pole shall be provided.Use earth leakage breaker (NV). The breaker shall be provided to ensure disconnection of all active phase conductors of the supply.
*3. The values given in the table above are not always measured against the ground value.
*4. Use wires in conformity with design 60245 IEC 57.

**Note: 1. Wiring size must comply with the applicable local and national codes.**
**2. Install an earth longer than other cables.**
**3. Please keep enough output capacity of power supply for each heater. Insufficient power supply capacity might cause chattering.**

### 6.4.2 Connecting inputs/outputs

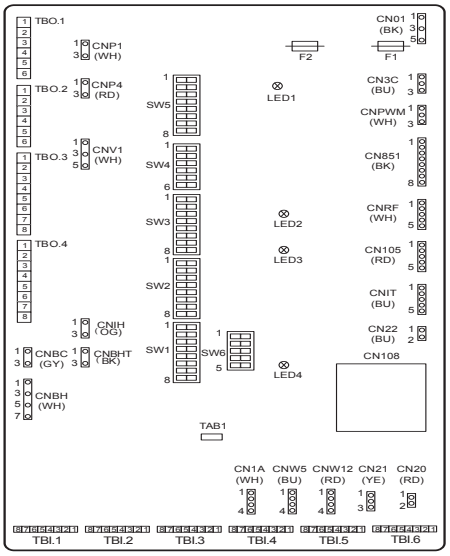


<Figure 6.4.3>

**Wiring specification and local supply parts**

| Item | Name | Model and specifications |
|---|---|---|
| Signal input function | Signal input wire | Use sheathed vinyl coated cord or cable.<br>Max. 30 m<br>Wire type: CV, CVS or equivalent<br>Wire size: Stranded wire 0.13 mm² to 0.52 mm²<br>Solid wire: ø0.4 mm to ø0.8 mm |
| | Switch | Non-voltage “a” contact signals<br>Remote switch: minimum applicable load 12V DC, 1mA |

**Note:**
**Stranded wire should be processed with insulation-covered bar terminal (DIN46228-4 standard compatible type).**

Cylinder unit/ Hydrobox/GSHP/WTW

## ■ Signal inputs

| Name | Terminal block | Connector | Item | OFF (Open) | ON (Short) |
|---|---|---|---|---|---|
| IN1 | TBI.1 7-8 | — | Room thermostat 1 input *1 | Refer to SW2-1 in <6.3.1 DIP Switch Functions>. | |
| IN2 | TBI.1 5-6 | — | Flow switch 1 input | Refer to SW2-2 in <6.3.1 DIP Switch Functions>. | |
| IN3 | TBI.1 3-4 | — | Flow switch 2 input (Zone1) | Refer to SW3-2 in <6.3.1 DIP Switch Functions>. | |
| IN4 | TBI.1 1-2 | — | Demand control input | Normal | Heat source OFF/ Boiler operation *3 |
| IN5 | TBI.2 7-8 | — | Outdoor thermostat input *2 | Standard operation | Heater operation/ Boiler operation *3 |
| IN6 | TBI.2 5-6 | — | Room thermostat 2 input *1 | Refer to SW3-1 in <6.3.1 DIP Switch Functions>. | |
| IN7 | TBI.2 3-4 | — | Flow switch 3 input (Zone2) | Refer to SW3-2 in <6.3.1 DIP Switch Functions>. | |
| IN8 | TBI.3 7-8 | — | Electric energy meter 1 | *4 | |
| IN9 | TBI.3 5-6 | — | Electric energy meter 2 | | |
| IN10 | TBI.2 1-2 | — | Heat meter | | |
| IN11 | TBI.3 3-4 | — | Smart grid ready input | *5 | |
| IN12 | TBI.3 1-2 | — | | | |
| INA1 | TBI.4 1-3 | CN1A | Flow sensor | — | — |

*1. Set the ON/OFF cycle time of the room thermostat for 10 minutes or more; otherwise the compressor may be damaged.
*2. If using outdoor thermostat for controlling operation of heaters, the lifetime of the heaters and related parts may be reduced.
*3. To turn on the boiler operation, use the main remote controller to select “Boiler” in “External input setting“ screen in the service menu.
*4. Connectable electric energy meter and heat meter

- Pulse type: Voltage free contact for 12VDC detection by FTC (TBI.2 1pin ,TBI.3 5 and 7 pins have a positive voltage.)
- Pulse duration: Minimum ON time: 40ms
  Minimum OFF time: 100ms
- Possible unit of pulse: 0.1 pulse/kWh 1 pulse/kWh 10 pulse/kWh
  100 pulse/kWh 1000 pulse/kWh

Those values can be set by the main remote controller. (Refer to the menu tree in "Main remote controller".)
*5. As for the SG ready, refer to "Smart grid ready" in 6.7 System setup.

## ■ Thermistor inputs

| Name | Terminal block | Connector | Item | Optional part model |
|---|---|---|---|---|
| TH1 | — | CN20 | Thermistor (Room temp.) (Option) | PAC-SE41TS-E |
| TH2 | — | CN21 | Thermistor (Ref. liquid temp.) | — |
| THW1 | — | CNW12 1-2 | Thermistor (Flow water temp.) | — |
| THW2 | — | CNW12 3-4 | Thermistor (Return water temp.) | — |
| THW5A | — | CNW5 1-2 | Thermistor (DHW tank upper water temp.) | — |
| THW5B | — | CNW5 3-4 | Thermistor (DHW tank lower water temp.) | — |
| THW6 | TBI.5 7-8 | — | Thermistor (Zone1 flow water temp.) (Option) *1 | PAC-TH011-E |
| THW7 | TBI.5 5-6 | — | Thermistor (Zone1 return water temp.) (Option) *1 | |
| THW8 | TBI.5 3-4 | — | Thermistor (Zone2 flow water temp.) (Option) *1 | PAC-TH011-E |
| THW9 | TBI.5 1-2 | — | Thermistor (Zone2 return water temp.) (Option) *1 | |
| THW10 | TBI.6 5-6 | — | Thermistor (Mixing tank water temp.) | PAC-TH012HT-E |
| THWB1 | TBI.6 7-8 | — | Thermistor (Boiler flow water temp.) (Option) *1 | |

**Ensure to wire thermistor wirings away from the power line and/or OUT1 to 15 wirings.**

***1. The maximum length of the thermistor wiring is 30 m. When the wires are wired to adjacent terminals, use ring terminals and insulate the wires.**

**The length of the optional thermistors are 5 m. If you need to splice and extend the wirings, following points must be carried out.**

**1) Connect the wirings by soldering.**

**2) Insulate each connecting point against dust and water. Stranded wire should be processed with insulation-covered bar terminal (DIN46228-4 standard compatible type).**

## ■ Outputs

| Name | Terminal block | Connector | Item | OFF | ON | Signal/Max current | Max. total current |
|---|---|---|---|---|---|---|---|
| OUT1 | TBO.1 1-2 | CNP1 | Water circulation pump 1 output (Space heating & DHW) | OFF | ON | 230V AC 1.0A Max. (Inrush current 40A Max.) | 4.0A |
| OUT2 | TBO.1 3-4 | — | Water circulation pump 2 output (Space heating for Zone1) | OFF | ON | 230V AC 1.0A Max. (Inrush current 40A Max.) | |
| OUT3 | TBO.1 5-6 | — | Water circulation pump 3 output (Space heating for Zone2) *1<br>2-way valve 2b output *2 | OFF | ON | 230V AC 1.0A Max. (Inrush current 40A Max.) | |
| OUT14 | — | CNP4 | Water circulation pump 4 output (DHW) | OFF | ON | 230V AC 1.0A Max. (Inrush current 40A Max.) | |
| OUT4 | — | CN851 | 3-way valve output | Heating | DHW | — | 2.5A |
| OUT5 | TBO.2 1-2<br>TBO.2 2-3 | — | Mixing valve output *1 | Stop | Close<br>Open | 230V AC 0.1A Max. | |
| OUT6 | — | CNBH 1-3 | Booster heater 1 output | OFF | ON | 230V AC 0.5A Max. (Relay) | |
| OUT7 | — | CNBH 5-7 | Booster heater 2 output | OFF | ON | 230V AC 0.5A Max. (Relay) | |
| OUT8 | TBO.4 7-8 | — | — | — | — | — | |
| OUT9 | TBO.4 5-6 | CNIH | Immersion heater output | OFF | ON | 230V AC 0.5A Max. (Relay) | |
| OUT11 | TBO.3 5-6 | — | Error output | Normal | Error | 230V AC 0.5A Max. | |
| OUT12 | TBO.3 7-8 | — | — | — | — | — | |
| OUT13 | TBO.4 3-4 | — | 2-way valve 2a output *2 | OFF | ON | 230V AC 0.1A Max. | |
| OUT15 | TBO.4 1-2 | — | Comp ON signal | OFF | ON | 230V AC 0.5A Max. | |
| OUT10 | TBO.3 1-2 | — | Boiler output | OFF | ON | non-voltage contact<br>·220-240V AC (30V DC)<br>0.5A or less<br>·10mA 5V DC or more | — |
| OUT16 | TBO.3 3-4 | — | Heating thermo ON signal | OFF | ON | | |
| OUTA1 | TBI.4 7-8 | — | Analog output | — | — | 0-10V DC 5mA max. | — |

**Do not connect to the terminals that are indicated as "—" in the "Terminal block" field.**
***1 For 2-zone temperature control.**
***2 For 2-zone valve ON/OFF control.**

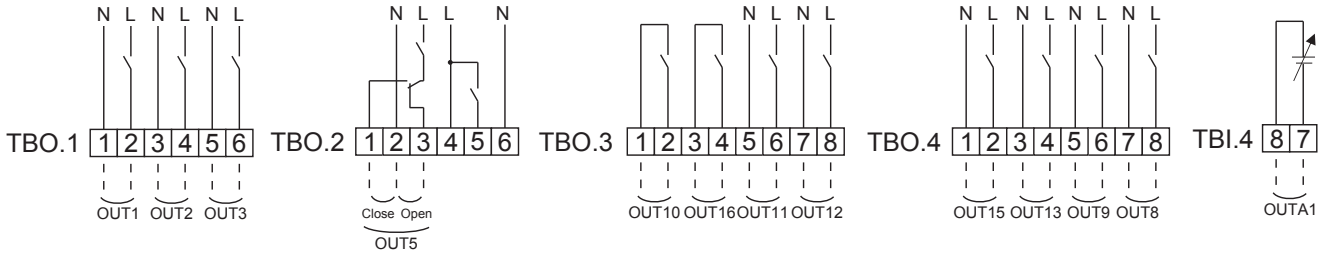


**Wiring specification and local supply parts**

| Item | Name | Model and specifications |
|---|---|---|
| External output function | Outputs wire | Use sheathed vinyl coated cord or cable.<br>Max. 30 m<br>Wire type: CV, CVS or equivalent<br>Wire size: Stranded wire: 0.25 mm² to 1.5 mm²<br>Solid wire: ø0.57 mm to ø1.2 mm |

**How to use TBO.1 to 4**

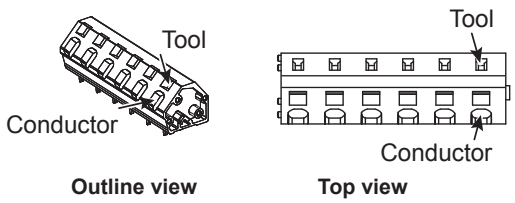


**Connect them using either way as shown above.**

<Figure 6.4.4>

**Note:**
1. **Do not connect multiple water circulation pumps directly to each output (OUT1, OUT2, and OUT3). In such a case, connect them via (a) relay(s).**
2. **Do not connect water circulation pumps to both TBO.1 1-2 and CNP1 at the same time.**
3. **Connect an appropriate surge absorber to OUT10 (TBO.3 1-2) depending on the load at site.**
4. **Stranded wire should be processed with insulation-covered bar terminal (DIN46228-4 standard compatible type).**
5. **Use the same thing as the Signal input wire for OUTA1 wiring.**

### 6.4.3 Wiring for 2-zone temperature control

Connect the pipe work and locally supplied parts according to the relevant circuit diagram shown “6.5.3 Local system”.

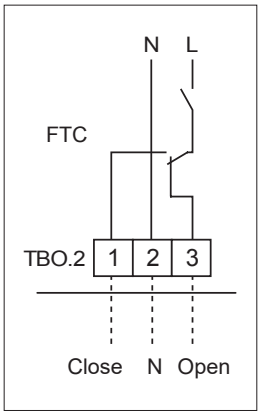


<Mixing valve>

Connect the signal line to open Port A (hot water inlet port) to TBO. 2-3 (Open), the signal line to open Port B (cold water inlet port) to TBO. 2-1 (Close) , and the neutral terminal wire to TBO. 2-2 (N).

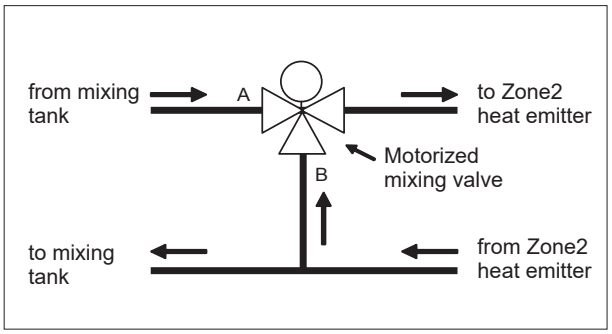


<Thermistor>

- Do not install the thermistors on the mixing tank.
- Install the Zone2 flow temp. thermistor (THW8) near the mixing valve.
- The maximum length of the thermistor wiring is 30 m.
- The length of the optional thermistors are 5 m. If you need to splice and extend the wirings, following points must be carried out.
  1) Connect the wirings by soldering.
  2) Insulate each connecting point against dust and water.

**Note:**
**Do not install the thermistors on the mixing tank. This could affect correct monitoring of flow and return temperatures through each zone.**
**Install the Zone2 flow temp. thermistor (THW8) near the mixing valve.**

### 6.4.4 Water circuit only operation (Indoor unit only operation) (during installation work)

During installation work, an electric heater in water circuit can be used.

**1. To start operation**

- Check if the power supply is OFF, and turn DIP switch 4-4 and 4-5 ( on FTC) ON.
- Turn ON the power supply.

**2. To end operation*1**

- Turn OFF the power supply.
- Turn DIP switch 4-4 and 4-5 (on FTC) OFF.

*1 When the water circuit only operation is ended, ensure to check over the settings after brine circuit is connected.

**Note:**
**Prolonged running of this operation may affect the life of the electric heater.**

### 6.4.5 Using SD memory card

The heat pump unit is equipped with an SD memory card interface in FTC.
Using an SD memory card can simplify main remote controller settings and can store operating logs. *1

**<Handling precautions>**

(1) Use an SD memory card that complies with the SD standards. Check that the SD memory card has a logo on it of those shown to the right.
(2) SD memory cards to the SD standards include SD, SDHC, miniSD, micro SD, and microSDHC memory cards. The capacities are available up to 32 GB. Choose that with a maximum allowable temperature of 55ºC.
(3) When the SD memory card is a miniSD, miniSDHC, microSD, or micro SDHC memory card, use an SD memory card converter adapter.
(4) Before writing to the SD memory card, release the write-protect switch.

(5) Before inserting or ejecting an SD memory card, make sure to power off the system. If an SD memory card is inserted or ejected with the system powered on, the stored data could be corrupted or the SD memory card be damaged.
*An SD memory card is live for a short duration after the system is powered off. Before insertion or ejection wait until the LED lamps on the FTC control board are all off.
(6) The read and write operations have been verified using the following SD memory cards, however, these operations are not always guaranteed as the specifications of these SD memory cards could change.

| Manufacturer | Model | Tested in |
|---|---|---|
| Verbatim | #44015 | Mar. 2012 |
| SanDisk | SDSDB-002G-B35 | Oct. 2011 |
| Panasonic | RP-SDP04GE1K | Oct. 2011 |
| Arvato | 2GB PS8032 TSB 24nm MLC | Jun. 2012 |
| Arvato | 2GB PS8035 TSB A19nm MLC | Jul. 2014 |
| SanDisk | SDSDUN-008G-G46 | Oct. 2016 |
| Verbatim | #43961 | Oct. 2016 |
| Verbatim | #44018 | Oct. 2016 |
| VANTASTEK | VSDHC08 | Sep. 2017 |

Before using a new SD memory card (including the card that comes with the unit), always check that the SD memory card can be safely read and written to by the FTC controller.
<How to check read and write operations>
a) Check for correct wiring of power supply to the system. For more details, refer to section 6.4.1. (Do not power on the system at this point.)
b) Insert an SD memory card.
c) Power on the system.
d) The LED4 lamp lights if the read and write operations are successfully completed. If the LED4 lamp continues blinking or does not light, the SD memory card cannot be read or written to by the FTC controller.

(7) Make sure to follow the instruction and the requirement of the SD memory card's manufacturer.
(8) Format the SD memory card if determined unreadable in step (6). This could make it readable.
Download an SD card formatter from the following site.
SD Association homepage: https://www.sdcard.org/home/
(9) FTC supports FAT file system but not NTFS file system.
(10) Mitsubishi Electric is not liable for any damages, in whole or in part, including failure of writing to an SD memory card, and corruption and loss of the saved data, or the like. Back up saved data as necessary.
(11) Do not touch any electronic parts on the FTC control board when inserting or ejecting an SD memory card, or else the control board could fail.

(a) For insertion, push on the SD memory card until it clicks into place.
(b) For ejection, push on the SD memory card until it clicks.
**Note: To avoid cutting fingers, do not touch sharp edges of the SD memory card connector (CN108) on the FTC control board.**

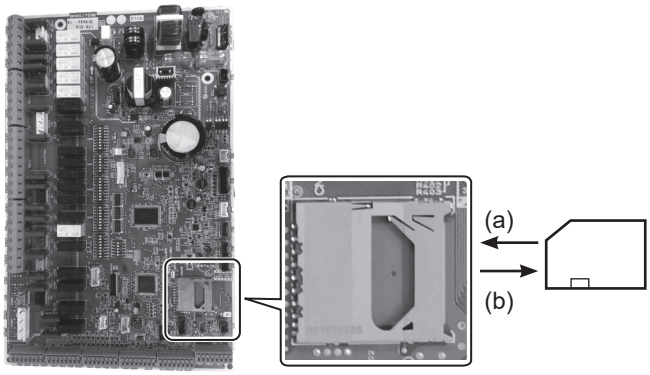


| Logos |
|---|
| |

| Capacities |
|---|
| 2 GB to 32 GB *2 |

| SD speed classes |
|---|
| All |

• The SD Logo is a trademark of SD-3C, LLC.
The miniSD logo is a trademark of SD-3C, LLC.
The microSD logo is a trademark of SD-3C, LLC.

*1 To edit main remote controller settings or to check operating data, an ecodan service tool (for use with PC) is required.
*2 A 2-GB SD memory card stores up to 30 days of operation logs.

## 6.5. Water circuit diagrams

### 6.5.1 Component Parts

| No. | Part name |
|---|---|
| A | DHW outlet pipe |
| B | Cold water inlet pipe |
| C | Water pipe (Space heating return connection) |
| D | Water pipe (Space heating flow connection) |
| E | Brine pipe (Bore hole return connection) |
| F | Brine pipe (Bore hole flow connection) |
| 1 | Control and electrical box |
| 2 | Main remote controller |
| 3 | Plate heat exchanger (Refrigerant - Water) |
| 4 | Booster heater 1,2 |
| 5 | 3-way valve |
| 6 | Manual air vent |
| 7 | Drain cock (Primary circuit) |
| 8 | Manometer |
| 9 | Pressure relief valve (3bar) |
| 10 | Automatic air vent |
| 11 | Expansion vessel (Optional parts) |
| 12 | Flow sensor |
| 13 | Strainer valve |
| 14 | Water circulation pump 1 (Primary circuit) |
| 15 | Pump valve |
| 16 | DHW tank |
| 17 | Plate heat exchanger (Water - Water) |
| 18 | Scale trap |
| 19 | Water circulation pump (Sanitary circuit) |
| 20 | Immersion heater (Optional parts) |
| 21 | Level vessel (Local supply) |
| 22 | Pressure relief valve (10bar) (DHW Tank) |
| 23 | Drain cock (DHW tank) |
| 24 | Pressure relief valve (3bar) (Local supply) |
| 25 | Flow water temp. thermistor (THW1) |
| 26 | Return water temp. thermistor (THW2) |
| 27 | DHW tank water temp. thermistor (THW5A) |
| 28 | DHW tank water temp. thermistor (THW5B) |
| 29 | Refrigerant liquid temp. thermistor (TH2) |
| 30 | Module |
| 31 | Drain pipe (Local supply) |
| 32 | Back flow prevention device (Local supply) |
| 33 | Isolating valve (Local supply) |
| 34 | Magnetic filter (Local supply) (Recommended) |
| 35 | Manometer (Local supply) |
| 36 | Compressor |
| 37 | High-pressure switch/sensor |
| 38 | Linear expansion valve |
| 39 | Charge plug |
| 40 | Liquid temp. thermistor (TH3) |
| 41 | Discharge temp. thermistor (TH4) |
| 42 | Ambient temp. thermistor (TH7) |
| 43 | Heat sink temp. thermistor (TH8) |
| 44 | Plate heat exchanger (Brine - Refrigerant) |
| 45 | Drain cock (Brine circuit) |
| 46 | Brine circulation pump |
| 47 | Flow switch |
| 48 | Brine inlet temp. thermistor (TH32) |
| 49 | Brine outlet temp. thermistor (TH34) |
| 50 | Muffler |

<Table 6.5.1>

Note:
For parts not shown above figure, please refer to 'Circuit diagram'.

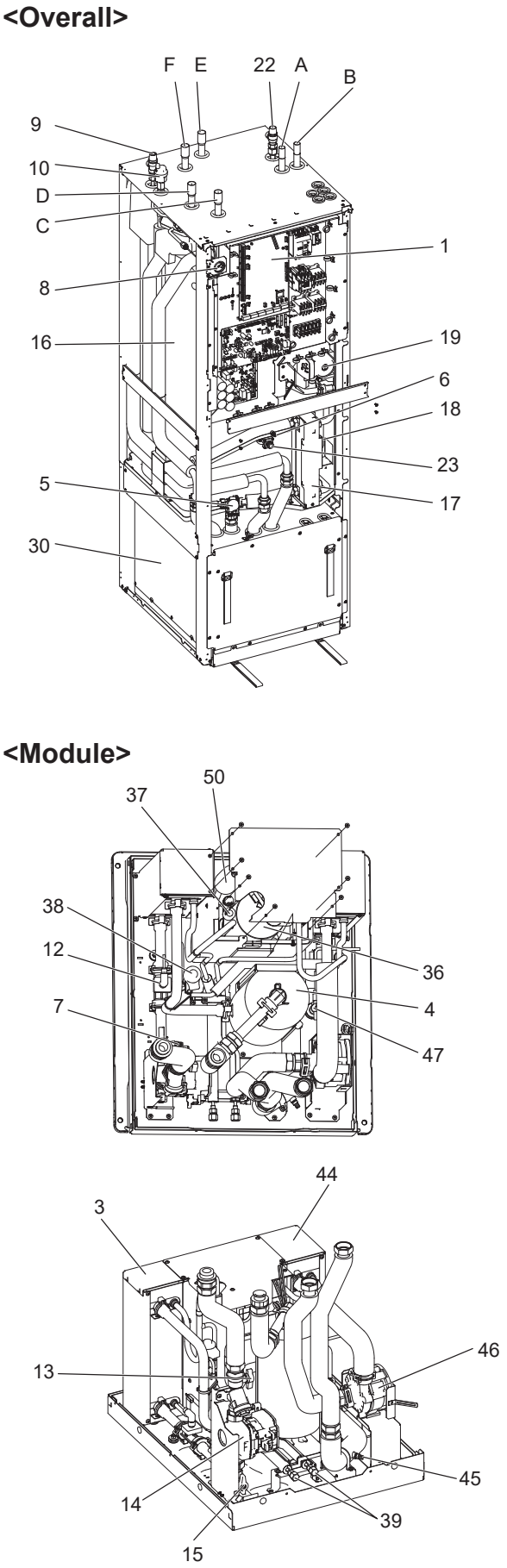


<Figure 6.5.1>

### 6.5.2 Circuit diagram

• Refer to <Table 6.5.1> for the part names.

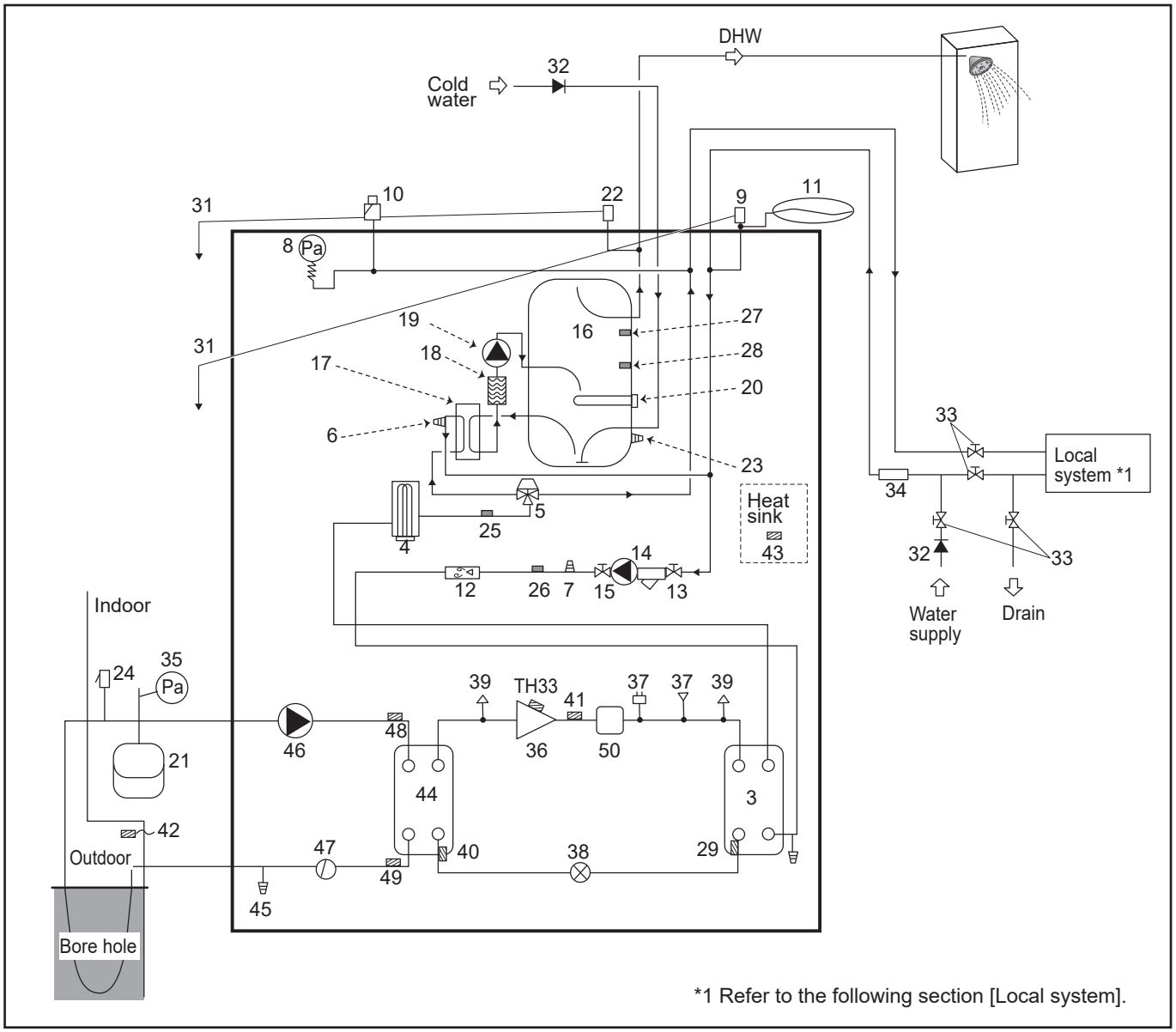


<Figure 6.5.2>

Note
- To enable draining of the heat pump unit an isolating valve should be positioned on both the inlet and outlet pipework.
- Be sure to install a strainer on the inlet pipework to the heat pump unit.
- Suitable drain pipework should be attached to all relief valves in accordance with your country's regulations.
- A backflow prevention device must be installed on the cold water supply pipework (IEC 61770)
- When using components made from different metals or connecting pipes made of different metals insulate the joints to prevent any corrosive reaction taking place which may damage the pipework.

| Model name | EHGT17D-YM9ED |
|---|---|
| Maximum supply pressure to the pressure reducing valve | 16 bar |
| Operating pressure (Potable side) | 3.5 bar |
| Expansion vessel charge setting pressure (Potable side) | 3.5 bar |
| Expansion valve setting pressure (Potable side) | 6.0 bar |
| Immersion heater specification (Potable side) * | 1000 W, 230 V |
| DHW tank capacity | 170 L |
| Mass of the unit when full | 360 kg |
| Maximum primary working pressure | 2.5 bar |

* EN60335/Type 1000W single phase 230V 50Hz, length 460 mm.
Use only Mitsubishi Electric service parts as a direct replacement.

### 6.5.3 Local system

**1-zone temperature control**

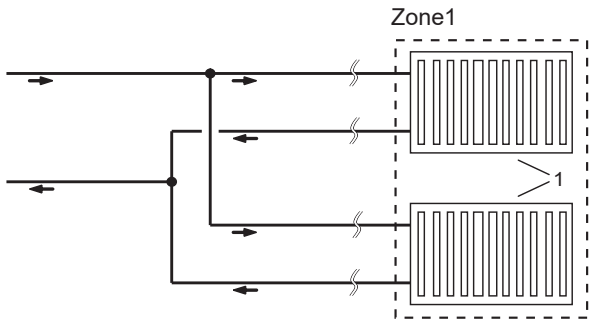


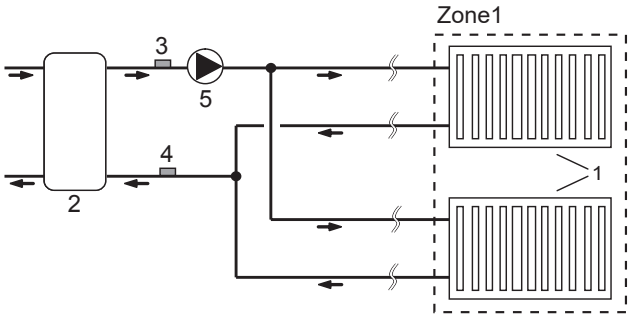


**2-zone temperature control**

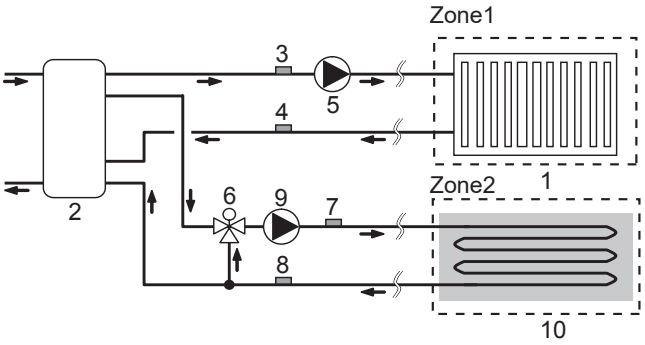


**1-zone temperature control with boiler**

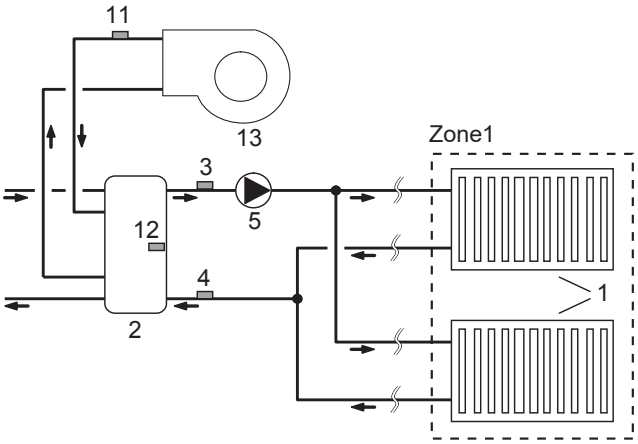


**2-zone temperature control with boiler**

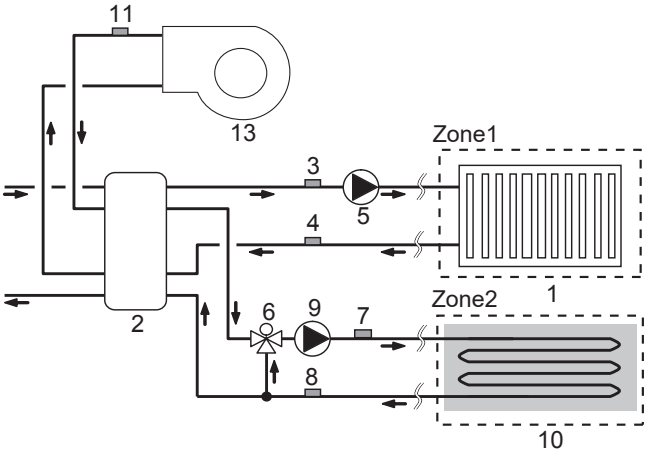


**1-zone temperature control (2-zone valve ON/OFF control)**

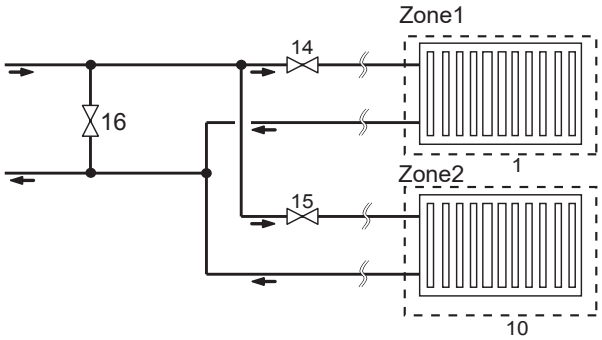


1. Zone1 heat emitters (e.g. radiator, fan coil unit) (local supply)
2. Mixing tank (local supply)
3. Zone1 flow water temp. thermistor (THW6) } Optional part : PAC-TH011-E
4. Zone1 return water temp. thermistor (THW7)
5. Zone1 water circulation pump (local supply)
6. Motorized mixing valve (local supply)
7. Zone2 flow water temp. thermistor (THW8) } Optional part : PAC-TH011-E
8. Zone2 return water temp. thermistor (THW9)
9. Zone2 water circulation pump (local supply)
10. Zone2 heat emitters (e.g. underfloor heating) (local supply)
11. Boiler flow water temp. thermistor (THWB1) } Optional part : PAC-TH012HT-E
12. Mixing tank thermistor (THW10)
13. Boiler (local supply)
14. Zone1 2-way valve (local supply)
15. Zone2 2-way valve (local supply)
16. Bypass valve (local supply)

## 6.6. Installation

**<Preparation before the installation and service>**

- Prepare the proper tools.
- Prepare the proper protection.
- Allow parts to cool before attempting any maintenance.
- Provide adequate ventilation.
- After stopping the operation of the system, turn off the power-supply breaker and remove the power plug.
- Discharge the capacitor before commencing work involving the electric parts.

**<Precautions during service>**

- Do not perform work involving electric parts with wet hands.
- Do not pour water or liquid into the electric parts.
- Do not touch the refrigerant.
- Do not touch the hot or cold surfaces in the refrigerant cycle.
- When the repair or the inspection of the circuit needs to be carried out without turning off the power, exercise great caution NOT to touch any LIVE parts.



### 6.6.1 Location

#### ■ Transportation and Handling

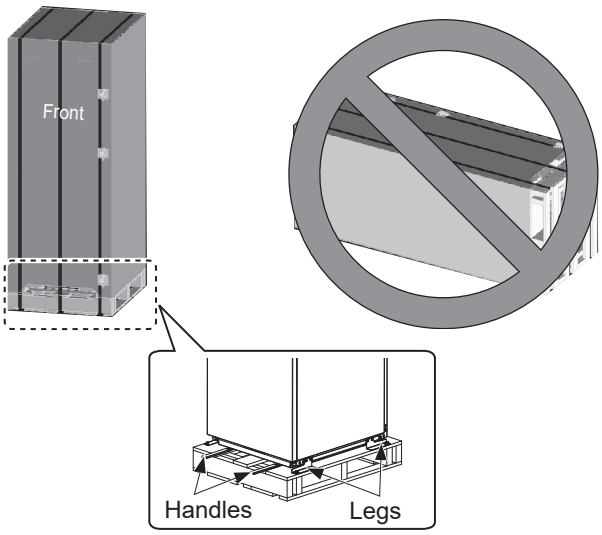


<Figure 6.6.1>

The heat pump unit is delivered on a wooden pallet base with cardboard protection.

Care should be taken when transporting the heat pump unit that the casing is not damaged by impact. Do not remove the protective packaging until heat pump unit has reached its final location. This will help protect the structure and control panel.

- The heat pump unit can be transported **ONLY** vertically. **The maximum allowable inclination is 45°.** If carried horizontally Module **MUST** be separated * <see How to remove the module>. (during installation)
- The heat pump unit should ALWAYS be moved by a minimum of 2 people.
- When carrying the heat pump unit use the handles provided.
- Before using the handles, make sure they are securely attached.
- **Please remove fixing legs, wooden base and any other packaging once the unit is in installation location.**

* Module removal, carrying and reassembling are installer's responsibility.

#### ■ Suitable Location

Before installation the heat pump unit should be stored in a frost-free weatherproof location. Units must **NOT** be stacked.

- The heat pump unit should be installed indoors in a frost free weather proof location.
- The heat pump unit should be positioned on a level surface capable of supporting 'it's **FILLED** weight. (Adjustable feet (accessory parts) can be used to ensure unit I level)
- When using the adjustable feet, ensure that the floor is strong enough.
- Care should be taken that minimum distances around and in front of the unit for service access are observed <Figure 6.6.2>.
- Secure the heat pump unit to prevent it being knocked over.
- Install the heat pump unit where it is not exposed to water/ excessive moisture.

#### ■ Service access diagrams

| Service access | |
|---|---|
| Parameter | Dimension (mm) |
| a | 300 |
| b | 150 |
| c (distance behind unit not visible in Figure 6.6.2) | 10 |
| d | 700** |
| e | 150* |

<Table 6.6.1>

* An additional space is required, when brine pipe connecting to the side.

** Including Module removal space service

Sufficient space MUST be left for the provision of discharge pipework as detailed in National and Local Building Regulations.

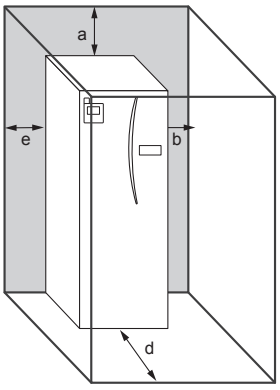


<Figure 6.6.2>
Service access

The heat pump unit must be located indoors and in a frost-free environment, for example in a utility room, to minimise heat loss from stored water.

## ■ Room thermostat

If fitting a new room thermostat for this system;

- Position it out of direct sunlight and draughts
- Position it away from internal heat sources
- Position it in a room without a TRV on the radiator/heat emitter.
- Position it on an internal wall

**Note:**

**Do not position the thermostat excessively close to the external wall.**

**The thermostat may detect the temperature of the wall, which could affect appropriate control of the room temperature.**

- Position it approx. 1.5 m from floor level

## ■ Outdoor temperature thermistor (TH7)

Please install the outdoor thermistor (TH7) in a place where external influences such as rain, wind and sunlight are minimized.

## ■ Repositioning

If you need to move the heat pump unit to a new position FULLY DRAIN the heat pump unit before moving to avoid damage to the unit.

**⚠ Warning**

**Refrigerant pipes connection shall be accessible for maintenance purposes.**

## ■ How to remove the module

**1. Remove the FRONT PANEL (four screws)**

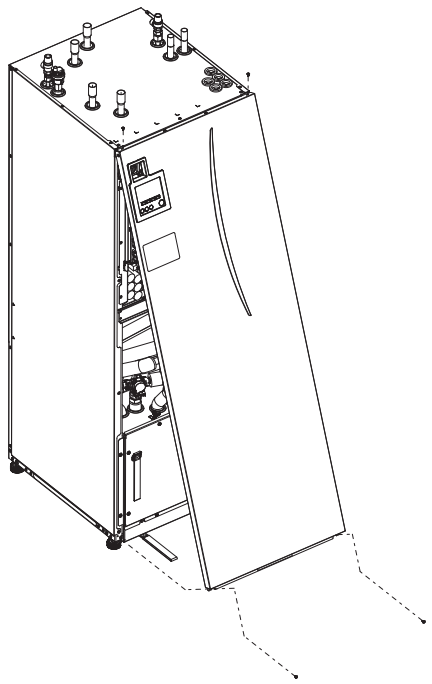

**2. Remove the four screws that fix the MODULE FRONT and FRAME**

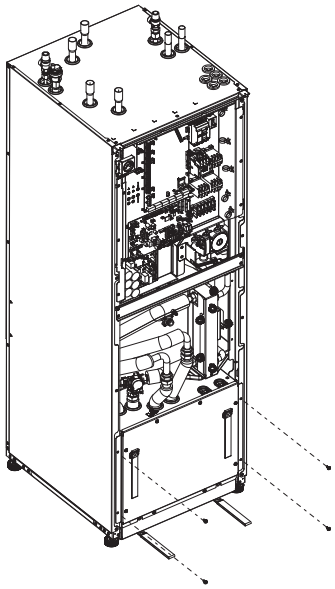

**3. CYLINDER - MODULE**

<WIRE>
Remove the 6 connectors from the MODULE BOX.
Remove the wires from the top of the MODULE BOX and the wire clamps on the External P-HEX.
· UNIT SIDE
Put them together under the CONT BOX
· MODULE SIDE
Put them together on the MODULE BOX

<PIPE>
Remove the following four point.
① BRINE PUMP - BRINE IN
② BRINE PUMP - BRINE OUT
③ 3 WAY VALVE - BOOSTER HEATER
④ WATER PUMP - WATER IN

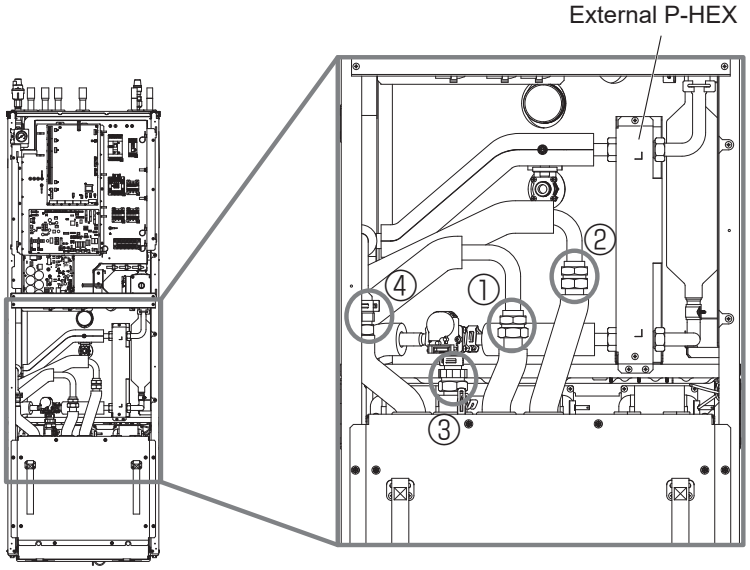

**4. Pull the MODULE BOX out by using the MODULE HANDLES**

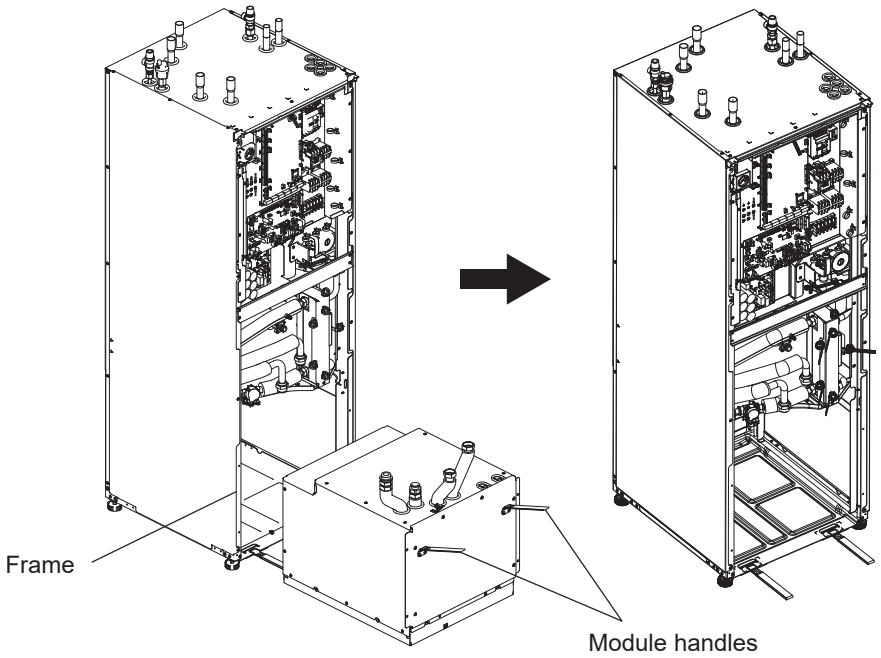


**5. After pulling MODULE BOX out**

Fit the cap or plastic bag etc. (local supply) on flexible pipes.
Please bundle the wires during transportation and secure them with band etc. on the module.

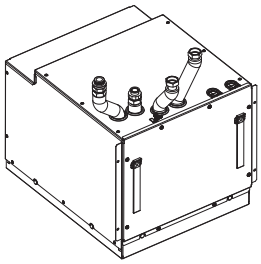

* The module is installed in reverse order.
When returning the Module unit assy to the unit, be careful not to get your hands caught between the unit and the Module unit assy. Hold the module unit assy with nylon bands (Module handles), not the corners of it.

### 6.6.2 Water/Brine Quality and System Preparation

**<Water>**

**■ General**

- The water in both primary and sanitary circuit should be clean and with pH value of 6.5-8.0
- The followings are the maximum values;
  Calcium: 100mg/L, Ca hardness: 250mg/L
  Chloride: 100mg/L, Copper: 0.3mg/L
- Other constituents should be to European Directive 98/83 EC standards.
- In known hard water areas, to prevent/minimise scaling, it is beneficial to restrict the routine stored water temperature (DHW max. temp.) to 55°C.

**■ Anti-Freeze**

Anti-freeze solutions should use propylene glycol with a toxicity rating of Class 1 as listed in Clinical Toxicology of Commercial Products, 5th Edition.

**Note:**

**1. Ethylene glycol is toxic and should NOT be used in the primary water circuit in case of any cross-contamination of the potable circuit.**

**2. For 2-zone valve ON/OFF control, propylene glycol should be used.**

**■ Installation (primary water circuit)**

- Before installation heat pump unit, thoroughly cleanse pipework of building debris, solder etc using a suitable chemical cleansing agent.
- Flush the system to remove chemical cleanser.
- The responsible installer should decide if anti-freeze solution is necessary for each site's conditions. Corrosion inhibitor however should ALWAYS be used.

When using chemical cleansers and inhibitors always follow manufacturer's instructions and ensure the product is appropriate for the materials used in the water circuit.

**<Brine>**

**■ General**

- **MUST** fill the following antifreeze solution when filling the brine circuit.
  38 WT% propylene glycol
  29 WT% bioethanol
  25 WT% ethylene glycol
  **Note: DO NOT use Inorganic brine.**
- As the temperature of brine system can fall below 0 °C it must be protected against freezing down to -15 °C.
- Max length per coil for the collector should not exceed 400 m.
- In those cases where it is necessary to have several collectors, these should be connected in parallel with the possibility for adjusting the flow of the relevant coil.
- For surface soil heat, the hose should be buried at a depth determined by local conditions and the distance between the hoses should be at least 1 metre.
- For several bore holes, the distance between the holes must be determined according to local conditions.
- Ensure the collector hose rises constantly towards the heat pump unit to avoid air pockets. If this is not possible, airvents should be used.
- Fit the supplied particle filter on the incoming pipe.
- Use the heat pump unit ONLY in a closed system for brine circuit. Using the system in an open system will lead to excessive corrosion.

**■ Installation (brine circuit)**

- Before installation heat pump unit, thoroughly cleanse pipework of building debris, solder etc using a suitable chemical cleansing agent.
- Flush the system to remove chemical cleanser.

When using chemical cleansers and inhibitors always follow manufacturer's instructions and ensure the product is appropriate for the materials used in the circuit.

**■ Amount of brine required in the brine circuit**

- As a measure of the brine filling amount, please make 1L/m of collector hose.

---

**■ How to access Internal Components and Control and Electrical Box**

<A> Opening the front panel

1. Remove the two lower screws and two upper screws.
2. Slide front panel upwards to slightly and open carefully.
3. Disconnect the relay connector connecting main remote controller cable and the control board cable.

<B> Accessing the back of the control and electrical box

The control and electrical box has 6 holding screws and is hinged on the right hand side.

1. Remove the holding screws on the control and electrical box.
2. The control and electrical box can then be swung forward on the right hand hinges.

**Note:**

**After servicing, re-secure all cables using straps provided. Reconnect main remote controller cable to its relay connector. Replace front panel and resecure screws at base.**

### 6.6.3 Water Pipe Work

#### ■ Hot Water Pipework

Connect the flow for the DHW to pipe A (Figure 6.5.1).
The function of the following safety components of the heat pump unit should be checked on installation for any abnormalities;
- Pressure relief valve (Primary circuit and Tank)
- Expansion vessel pre-charge (gas charge pressure)

The instruction on the following pages regarding safe discharge of hot water from Safety devices should be followed carefully.
- The pipework will become very hot, so should be insulated to prevent burns.
- When connecting pipework, ensure that no foreign objects such as debris or the like do not enter the pipe.

#### ■ Cold Water Pipework

Cold water to the suitable standard (see section 4.2) should be introduced to the system by connecting pipe B (Figure 6.5.1) using appropriate fittings.

#### ■ Negative pressure prevention

To prevent negative pressure effecting DHW tank, installer should install appropriate pipework or use appropriate devices.

#### ■ Pipework Connections

Connections to the heat pump unit should be made using the 22 mm or 28 mm compression as appropriate.
DHW pipe (accessory parts) into the pipes and tighten them from 0.75 to 1.25 turns.
Do not over-tighten compression fittings as this will lead to deformation of the olive ring and potential leaks.
**Note:**
**To weld the pipes in the field, cool the pipes on the heat pump unit using wet towel etc.**

#### ■ Insulation of Pipework

- All exposed water pipework should be insulated to prevent unnecessary heat loss and condensation. To prevent condensate entering the heat pump unit, the pipework and connections at the top of the heat pump unit should be carefully insulated.
- Cold and hot water pipework should not be run close together where possible, to avoid unwanted heat transfer.
- Pipework should be insulated with suitable pipe insulation material with a thermal conductivity of ≤ 0.04 W/m.K.

#### ■ Filling the System (Primary Circuit)

1. Check and charge expansion vessel.
2. Check all connections including factory fitted ones are tight.
3. Insulate pipework.
4. Thoroughly clean and flush, system of all debris. (see section 6.6.2 for instruction.)
5. Fill heat pump unit with potable water. Fill primary heating circuit with water and suitable anti-freeze and inhibitor as necessary. Always use a filling loop with double check valve when filling the primary circuit to avoid back flow contamination of water supply.

| |
|---|
| When connecting metal pipes of different materials insulate the joints to prevent a corrosive reaction taking place which will damage the pipework. |

6. Check for leakages. If leakage is found, retighten the nut onto the connections.
7. Pressurise system to 1 bar.
8. Release all trapped air using air vents during and following heating period.
9. Top up with water as necessary. (If pressure is below 1 bar)

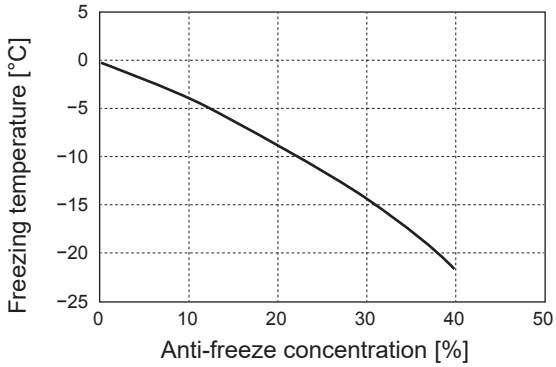


<Figure 6.6.3>

## ■ Sizing Expansion Vessels

Expansion vessel volume must fit the local system water volume.
To size an expansion vessel for the heating circuit the following formula and graph can be used.
For installation of the heat pump unit, provide and install an expansion vessel in the field as the model **DOES NOT** come fitted with an expansion vessel.

$$V = \frac{\varepsilon \times G}{1 - \frac{P_1 + 0.098}{P_2 + 0.098}}$$

Where;
V : Necessary expansion vessel volume [L]
ε : Water expansion coefficient
G : Total volume of water in the system [L]
$P_1$ : Expansion vessel setting pressure [MPa]
$P_2$ : Max. pressure during operation [MPa]

Graph to the right is for the following values

ε : at 70 °C = 0.0229
$P_1$ : 0.1 MPa
$P_2$ : 0.3 MPa
*A 30% safety margin has been added.

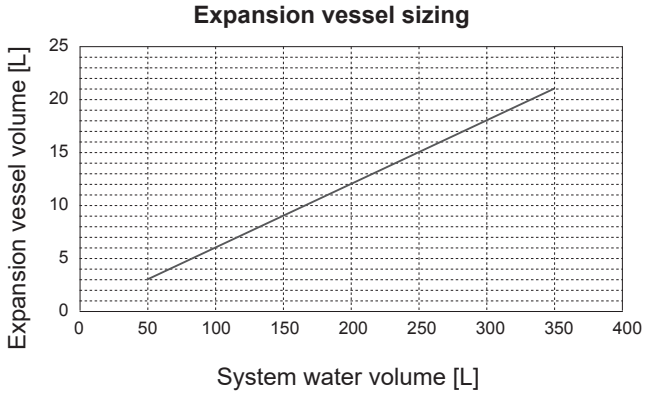

<Figure 6.6.4>

### 6.6.4 Water Circulation Pump Characteristics

**1. Primary circuit**
Pump speed can be selected by main remote controller setting (see <Figure 6.6.5> ).
Adjust the pump speed setting so that the flow rate in the primary circuit is appropriate for the Table 6.6.2. It may be necessary to add an additional pump to the system depending on the length and lift of the primary circuit.

| Water flow rate range [L/min] | 7.1-27.7 |
|---|---|

<Table 6.6.2>

* If the water flow rate is less than 7.1 L/min, the flow rate error will be activated.
If the water flow rate exceeds 27.7 L/min, the flow speed will be greater than 1.5 m/s, which could erode the pipes.

<Second pump >
If a second pump is required for the installation please read the following carefully.
If a second pump is used in the system it can be positioned in 2 ways.
The position of the pump influences which terminal of the FTC the signal cable should be wired to. If the additional pump(s) have current greater than 1A please use appropriate relay. Pump signal cable can either be wired to TBO.1 1-2 or CNP1 but NOT both.

Option 1 (Space heating only)
If the second pump is being used for the heating circuit only then the signal cable should be wired to TBO.1 terminals 3 and 4 (OUT2). In this position the pump can be run at a different speed to the heat pump unit's in-built pump.

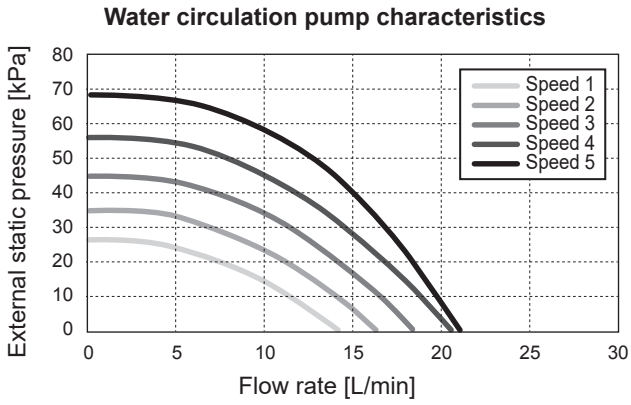

<Figure 6.6.5>

**2. Sanitary circuit**
Default setting: Speed 2
DHW circulation pump MUST be set to speed 2.

## ■ Immersion heater (Optional part)

When an immersion heater is fitted, do NOT energise the heater until the DHW tank is full of water. Also do NOT energise any immersion heater if any sterilisation chemicals remain in the DHW tank as this will cause premature failure of the heater.

### 6.6.5 Brine Pipe Work

#### ■ Pipework Connections

Connections to the heat pump unit should be made using the 28 mm compression as appropriate.
Do not over-tighten compression fittings as this will lead to deformation of the olive ring and potential leaks.
**Note:**
**To weld the pipes in the field, cool the pipes on the heat pump unit using wet towel etc.**

#### ■ Side Connections

It is possible to angle the brine connections, for connection to the side instead of top connection.
To angle out the connection:
1. Remove left side panel.
2. Cut the pipes to the desired length and angle the pipes in the desired direction.
3. Make a hole on the panel.
4. Fit the panel
5. Connect the pipes
6. Please fill in the gap between panel and brine pipes with insulation

**Notes:**
- **For side connection, the pipe diameter is 22.2 mm.**
- **Triangle marks on left side panel shows centre of brine pipes.**
- **Noise from heat pump can be big.**

#### ■ Insulation of Pipework

- All exposed brine pipework should be insulated to prevent unnecessary heat loss and condensation. To prevent condensate entering the heat pump unit, the pipework and connections at the top of the heat pump unit should be carefully insulated.
- Brine inlet and outlet pipework should not be run close together where possible, to avoid unwanted heat transfer.
- Pipework between borehole and heat pump unit should be insulated with suitable pipe insulation material with a thermal conductivity of ≤ 0.04 W/m.K.



#### ■ Filling the System (Brine Circuit)

1. Check and charge expansion vessel or level vessel.
   If level vessel is used, close the valve under the level vessel.
2. Check all connections including factory fitted ones are tight.
3. If you use filling pump, Connect the filling pump and return line on the brine system's filler connector.
4. Insulate all exposed brine pipework.
5. Thoroughly clean and flush, system of all debris. (see section 6.6.2 for instruction.)
6. Close the valve in the filler connector, open the valves on the filler connector.
7. Fill heat pump unit with potable brine with brine pump.

> When connecting metal pipes of different materials insulate the joints to prevent a corrosive reaction taking place which will damage the pipework.

8. Check for leakages. If leakage is found, retighten the nut onto the connections.
9. Pressurise system to atmospheric pressure. Top up with water as necessary.
10. Close the valves on the filler connector, Open the three way valve in the filler connector.
11. If level vessel is used, open the valve under the level vessel.

#### Brine pump manual operation

Step1 Activate Brine pump manual operation
Needs Dip SW6-3:ON on C.B. before POWER ON
After that, LED1 on C.B. is lightning.

Step2 SW6-1: OFF to ON
After that, Brine pump operates and LED 2 on C.B. is lighting.
SW6-1: ON to OFF
After that, Brine pump stops and LED 2 on C.B. lights out.

Step3 If you need to finish the manual operation, please POWER OFF.
After that please return Dip SW6-3 on C.B. ON to OFF

**Note:**
- **If software detects Brine pump speed not more than 500rpm or over 5000 rpm for 1 minutes, brine pump stops and LED 2 lights 1 time. And Brine pump operation prohibits for 3 minutes. It is to protect abnormal operation and pump failure.**
- **If software detects low brine flow rate(63L detection) for 2 minutes 50 seconds, brine pump stops and LED 2 lights 2 times. And Brine pump operation prohibits for 3 minutes. It is to protect idling operation and pump failure.**

### ■ Brine Circulation Pump Characteristics

Pump speed can be changed by DIP Switch on C.B.(see Table 6.6.3)
Adjust the pump speed setting so that the flow rate in the brine circuit is appropriate for the unit (see Table 6.6.2) or borehole.

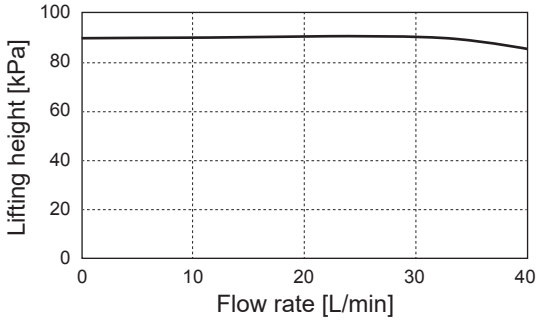


<Figure 6.6.6>

| Brine flow rate range [L/min] | 7.1-27.7 |
|---|---|

| SW8-1 | |
|---|---|
| OFF→ON | Activate correction |

| SW9 | | | | Speed correction | | |
|---|---|---|---|---|---|---|
| 1 | 2 | 3 | 4 | Step | rpm | |
| ■ | ■ | ■ | ■ | -7 | 2400 | |
| ■ | | ■ | ■ | -6 | 2600 | |
| ■ | ■ | | ■ | -5 | 2800 | |
| ■ | | | ■ | -4 | 3000 | |
| ■ | ■ | ■ | | -3 | 3200 | |
| ■ | | ■ | | -2 | 3400 | |
| ■ | ■ | | | -1 | 3600 | |
| | | | | 0 | 3800 | Factory setting |
| | ■ | | | 1 | 4000 | |
| | | ■ | | 2 | 4200 | |
| | ■ | ■ | | 3 | 4400 | |
| | | | ■ | 4 | 4500 | |

<Table 6.6.3>

## 6.7 System Set Up

### 6.7.1 Main remote Controller Options

The heat pump unit comes factory fitted with a main remote controller. This incorporates a thermistor for temperature monitoring and a graphical user interface to enable set-up, view current status and input scheduling functions. The main remote controller is also used for servicing purposes. This facility is accessed via password protected service menus.
To provide the best efficiency Mitsubishi Electric recommends using automatic adaptation function based on room temperature. To use this function a room thermistor needs to be present in a main living area. This can be done in a number of ways the most convenient are detailed below.
**Refer to heating section of this manual for instructions on how to set compensation curve, Flow temp. or Room temp. (Auto adaptation).**
**For instructions on how to set the thermistor input for the FTC please refer to Initial settings section.**

The factory setting for space heating mode is set to Room temp. (auto adaptation). If there is no room sensor present in the system, this setting must be changed to either Compensation curve mode or Flow temp. mode.

## ■ 1-zone temperature control

### Control option A

This option features the main remote controller and the Mitsubishi Electric wireless remote controller. The wireless remote controller is used to monitor room temperature and can be used to make changes to the space heating settings, boost DHW and switch to holiday mode without having to directly use the main remote controller.

If more than one wireless remote controller is used, the most recently requested temperature setting will commonly be applied to all rooms by the central control system regardless of which wireless remote controller was used. No hierarchy exists across these remote controllers.

Wire the wireless receiver to FTC referring to the wireless remote controller instruction manual. **Turn DIP SW1-8 to ON.** Before operation configure the wireless remote controller to transmit and receive data referring to the wireless remote controller installation manual.

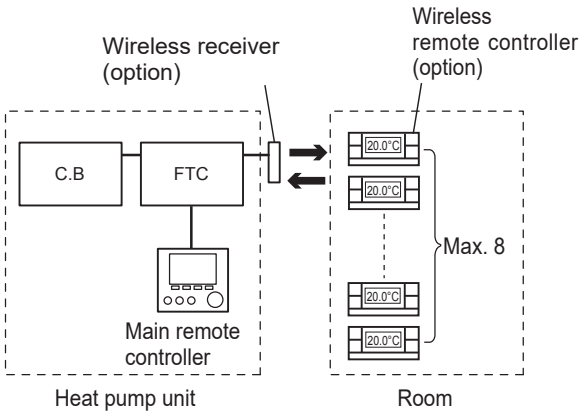


### Control option B

This option features the main remote controller and the Mitsubishi Electric thermistor wired to FTC. The thermistor is used to monitor room temperature but can not make any changes in control operation. Any changes to DHW must be made using the main remote controller mounted on the heat pump unit.

Wire the thermistor to the TH1 connector on FTC.
The number of room temperature thermistors that can be connected to FTC is always one.

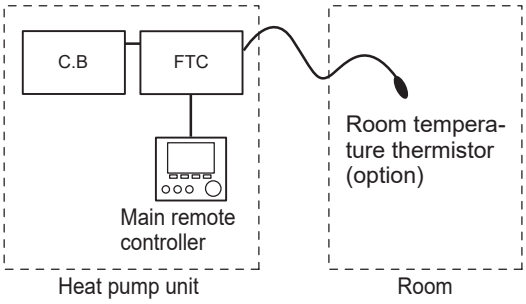


### Control option C

This option features the main remote controller being removed from the heat pump unit and situated in a different room. A thermistor built in the main remote controller can be used for monitoring the room temperature for Auto Adaptation function whilst keeping all its features of the main remote controller available.

The main remote controller and FTC are connected by a 2-core, 0.3 mm², non-polar cable (local supply) with a maximum length of 500 m.

To use the sensor in the main remote controller the main remote controller should come off from the heat pump unit. Otherwise it will detect the temperature of the heat pump unit instead of room temperature. This will affect the output of the space heating.

Note: Wiring for main remote controller cable shall be (5 cm or more) apart from power source wiring so that it is not influenced by electrical noise from power source wiring. (Do NOT insert main remote controller cable and power source wiring in the same conduit.)

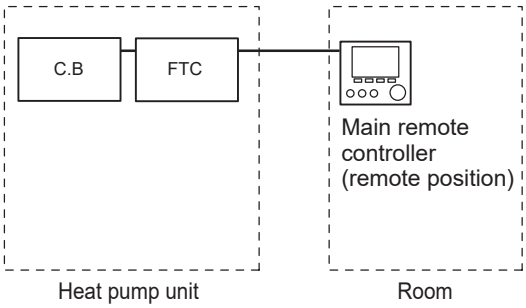


### Control option D

This option features the main remote controller and a locally supplied thermostat wired to FTC. The thermostat is used to set the maximum temperature for heating room. Any changes to DHW must be made using main remote controller mounted on the heat pump unit.
The thermostat is wired to IN1 in TBI.1 on FTC. The number of thermostats that can be connected to FTC is always one.

★ **The wireless remote controller can be also used as a thermostat.**

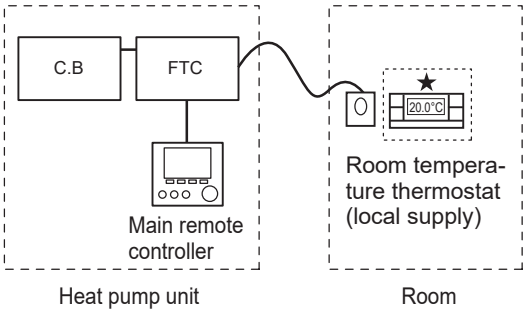

## ■ 2-zone temperature control

### Control option A

This option features the main remote controller, the Mitsubishi Electric wireless remote controller and a locally supplied thermostat. The wireless remote controller is used to monitor the Zone1 room temperature and the thermostat is used to monitor the Zone2 room temperature.
The thermostat can be also allocated to Zone1 and the wireless remote controller to Zone2.

The wireless remote controller can be also used to make changes to the space heating settings, boost DHW and switch to holiday mode without having to use the main remote controller.

If more than one wireless remote controller is used, the last temperature setting adjustment/demand will be applied to ALL rooms in same zone.

Wire the wireless receiver to FTC referring to the wireless remote controller instruction manual. Turn DIP SW1-8 to ON. Before operation configure the wireless remote controller to transmit and receive data referring to the wireless remote controller installation manual.
The thermostat is used to set the maximum temperature for heating Zone2 room.
The thermostat is wired to IN6 on FTC. (If the thermostat is allocated to Zone1, it is wired to IN1 on TBI.1.) (Refer to 6.4.2.)

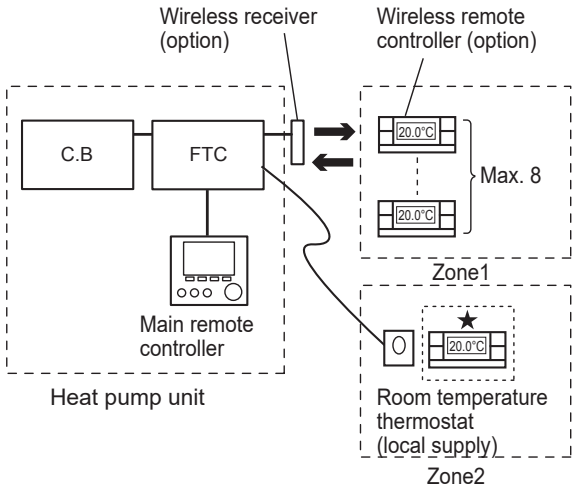


Zone1: Room temp. control (Auto adaptation)
Zone2: Compensation curve or flow temp. control

### Control option B

This option features the main remote controller, the Mitsubishi Electric thermistor and a locally supplied thermostat that are wired to FTC. The thermistor is used to monitor the Zone1 room temperature and the thermostat is used to control the Zone2 room temperature.

The thermostat can be also allocated to Zone1 and the thermistor to Zone2.
The thermistor can not make any changes in control operation. Any changes to DHW must be made using the main remote controller mounted on the heat pump unit.
Wire the thermistor to the TH1 connector on FTC.
The number of room temperature thermistors that can be connected to FTC is always one.
The thermostat is used to set the maximum temperature for heating Zone2 room.
The thermostat is wired to IN6 on FTC. (If the thermostat is allocated to Zone1, wire it to IN1 on TBI.1.) (Refer to 6.4.2.)

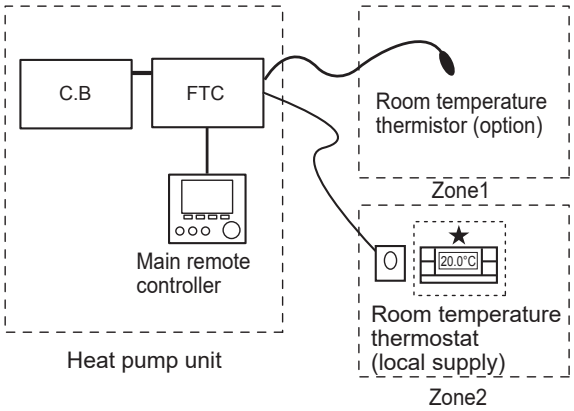


Zone1: Room temp. control (Auto adaptation)
Zone2: Compensation curve or flow temp. control

**Control option C**

This option features the main remote controller (with in-built thermistor) that is removed from the heat pump unit to monitor the Zone1 room temperature and a locally supplied thermostat to monitor the Zone2 room temperature.
The thermostat can be also allocated to Zone1 and the thermistor to Zone2.

A thermistor built into the main remote controller can be used for monitoring the room temperature for Auto Adaptation function whilst keeping all its features of the main remote controller available.
The main remote controller and FTC are connected by a 2-core, 0.3 mm², non-polar cable (local supply) with a maximum length of 500 m.
To use the sensor in the main remote controller the main remote controller should be detached from the heat pump unit. Otherwise it will detect the temperature of the heat pump unit instead of room temperature. This will affect the output of the space heating.

The thermostat is used to set the maximum temperature for heating Zone2 room.
The thermostat is wired to IN6 on FTC. (If the thermostat is allocated to Zone1, wire it to external input IN1 on TBI.1.) (Refer to 6.4.2.)

Note:
Wiring for main remote controller cable shall be (5 cm or more) apart from power source wiring so that it is not influenced by electrical noise from power source wiring. (Do NOT insert main remote controller cable and power source wiring in the same conduit.)

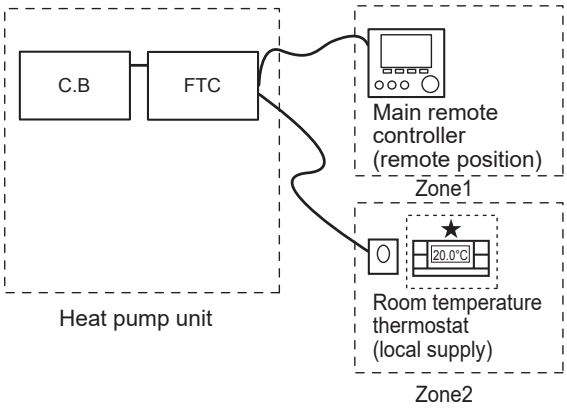


Zone1: Room temp. control (Auto adaptation)
Zone2: Compensation curve or flow temp. control

**Control option D**

This option features the locally supplied thermostats wired to FTC. The thermostats are individually allocated to Zone1 and Zone2. The thermostats are used to set each maximum temperature for heating Zone1 and Zone2 rooms. Any changes to DHW must be made using the main remote controller mounted on the heat pump unit.

The thermostat for Zone1 is wired to IN1 in TBI.1 on FTC.
The thermostat for Zone2 is wired to IN6 in TBI.1 on FTC.

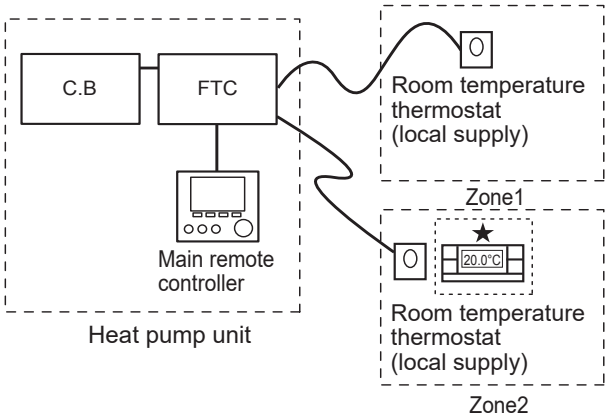


Zone1, Zone2: Compensation curve or flow temp. control

Note: For the options above, the sensor types can be exchanged between Zone1 and Zone2.
(e.g. Wireless remote controller in Zone1 and Room temp. thermostat in Zone2 can be changed to Room temp. thermostat and wireless remote controller, respectively).

★ **The wireless remote controller can be also used as a thermostat.**

### 6.7.2 Main remote controller

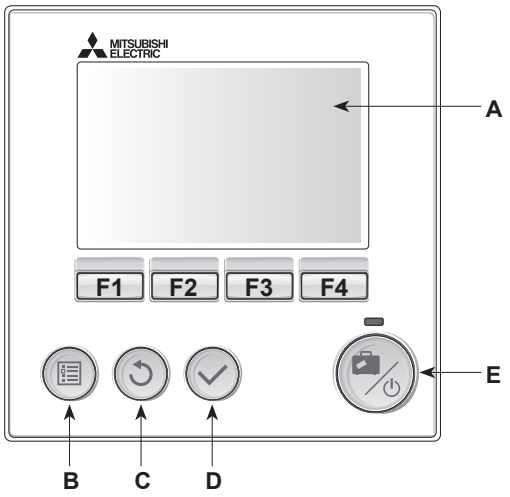


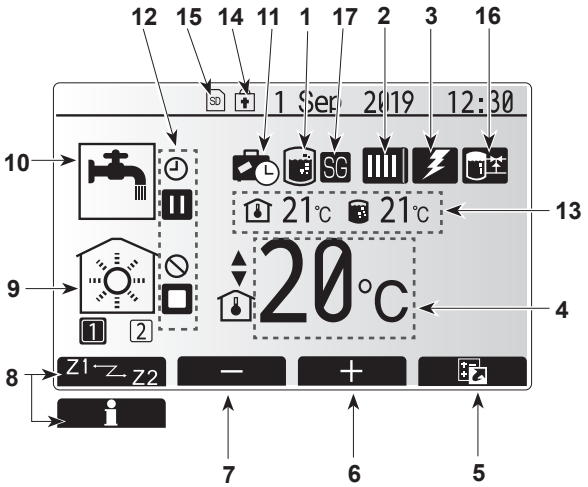


Main screen

**<Main remote controller parts>**

| Letter | Name | Function |
|---|---|---|
| A | Screen | Screen in which all information is displayed. |
| B | Menu | Access to system settings for initial set up and modifications. |
| C | Back | Return to previous menu. |
| D | Confirm | Used to select or save. (Enter key) |
| E | Power/ Holiday | If system is switched off pressing once will turn system on. Pressing again when system is switched on will enable Holiday Mode. Holding the button down for 3 seconds will turn the system off. (***1**) |
| F1-4 | Function keys | Used to scroll through menu and adjust settings. Function is determined by the menu screen visible on screen A. |

***1**
**When the system is switched off or the power supply is disconnected, the heat pump unit protection functions (e.g. freeze stat. function) will NOT operate. Please beware that without these safety functions enabled the heat pump unit may potentially become exposed to damage.**

**<Main screen icons>**

| | Icon | Description | |
|---|---|---|---|
| 1 | Legionella prevention | When this icon is displayed 'Legionella prevention mode' is active. | |
| 2 | Heat pump | | 'Heat pump' is running. |
| | | | Emergency heating |
| | | | 'Quiet mode' is activated. |
| 3 | Electric heater | When this icon is displayed the 'Electric heaters' (booster or immersion heater) are in use. | |
| 4 | Target temperature | | Target flow temperature |
| | | | Target room temperature |
| | | | Compensation curve |
| 5 | OPTION | Pressing the function button below this icon will display the option screen. | |
| 6 | + | Increase desired temperature. | |
| 7 | - | Decrease desired temperature. | |
| 8 | Z1⇄Z2 | Pressing the function button below this icon switches between Zone1 and Zone2. | |
| | Information | Pressing the function button below this icon displays the information screen. | |
| 9 | Space heating mode | | Heating mode Zone1 or Zone2 |
| 10 | DHW mode | Normal or Eco mode | |
| 11 | Holiday mode | When this icon is displayed 'Holiday mode' activated. | |
| 12 | | Timer | |
| | | Prohibited | |
| | | Server control | |
| | | Stand-by | |
| | | Stop | |
| | | Operating | |
| 13 | Current temperature | | Current room temperature |
| | | | Current water temperature of DHW tank |
| 14 | | The Menu button is locked or the switching of the operation modes between DHW and Heating operations are disabled in the Option screen. (***2**) | |
| 15 | | SD memory card is inserted. Normal operation. | |
| | | SD memory card is inserted. Abnormal operation. | |
| 16 | Buffer tank control | When this icon is displayed, 'Buffer tank control' is active. | |
| 17 | Smart grid ready | When this icon is displayed, 'Smart grid ready' is active. | |

***2 To lock or unlock the Menu, press the BACK and CONFIRM keys simultaneously for 3 seconds.**

## ■ General Operation

In general operation the screen displayed on the main remote controller will be shown as in the figure on the right.
This screen shows the target temperature, space heating mode, DHW mode, any additional heat sources being used, holiday mode, and the date and time.

You should use the function buttons to access more information. When this screen is displayed pressing F1 will display the current status and pressing F4 will take the user to the option menu screen.

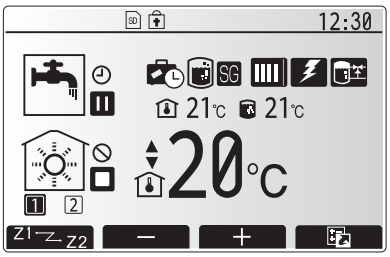

Home screen

**<Option screen>**
This screen shows the main operating modes of the system.
Use function buttons to switch between Operating (▶), Prohibited (⊘) and Timer (◷) for DHW and space heating, or detailed information on energy or capacity.

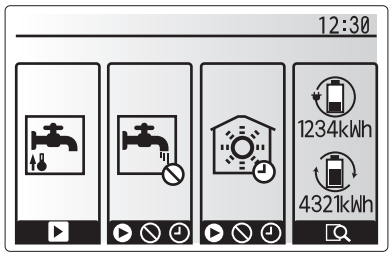

Option screen

The option screen allows quick setting of the following;
- Forced DHW — to turn ON/OFF press F1
- DHW operating mode — to change mode press F2
- Space heating operating mode — to change mode press F3
- Energy monitor
  Following accumulated energy values are displayed.
  : Consumed electrical energy in total (month-to-date)
  : Delivered heat energy in total (month-to-date)
  To monitor the energy values in each operation mode for [month-to-date/ last month/ the month before last/ year-to-date/ last year], press F4 to access to the Energy monitor menu.

**Note:**
**If a certain accuracy is required for the monitoring, the method to display captured data from external energy meter(s) should be set up. Contact your installer for further details.**

## ■ Initial settings wizard

When the main remote controller is switched on for the first time, the screen automatically goes to Language setting screen, Date/Time setting screen and Main settings menu screen in order. Enter the desired number using the function keys and press CONFIRM.

**Note:**
<HEATER CAPACITY RESTRICTION>
This setting restricts the booster heater capacity. It is NOT possible to change the setting after starting up.
If you do not have any special requirements (such as building regulations) in your country, skip this setting (select "No").

- Hot water (DHW/Legionella)
- Heating
- Operation mode (ON/Prohibited/Timer)
- Pump speed
- Heat pump flow rate range
- Mixing valve control
- HEATER CAPACITY RESTRICTION

*1 The screen goes to the next setting screen. Changes have not been saved.

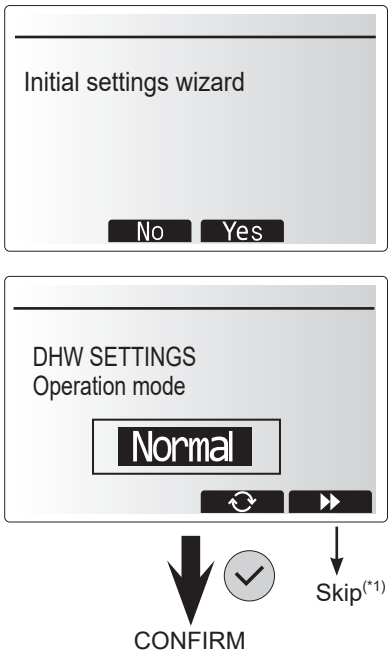

## ■ Main Settings Menu

The main settings menu can be accessed by pressing the MENU button. To reduce the risk of untrained end users altering the settings accidentally there are two access levels to the main settings; and the service section menu is password protected.

**User Level – Short press**

If the MENU button is pressed once for a short time the main settings will be displayed but without the edit function. This will enable the user to view current settings but **NOT** change the parameters.

**Installer Level – Long press**

If the MENU button is pressed down for 3 seconds the main settings will be displayed with all functionality available.
The colour of ◄► buttons is inverted, as per right figure.

The following items can be viewed and/or edited (dependent on access level).

- Domestic Hot water (DHW)
- Heating
- Schedule timer
- Holiday mode
- Initial settings
- Service (Password protected)

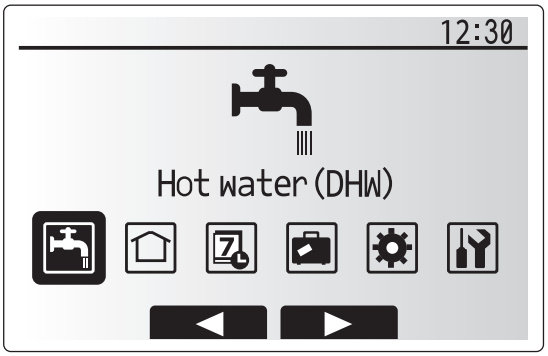


Main menu

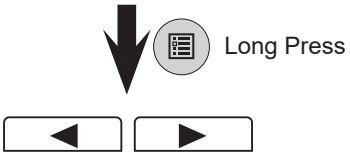


## Initial Settings

1. From the main settings menu use F2 and F3 buttons to highlight 'Initial settings' icon and select by pressing CONFIRM.
2. Use F1 and F2 buttons to scroll through the menu list. When the required title is highlighted then press CONFIRM to edit.
3. Use the relevant function buttons to edit each initial setting then press CONFIRM to save the setting.

Initial settings that can be edited are

- Date/Time *Be sure to set it to the local standard time.
- Language
- Summer time
- Temp. display
- Contact number
- Time display
- °C/°F
- Room sensor settings

To return to the main settings menu press the BACK button.

| Icon | Description |
|---|---|
| | Hot water (DHW) |
| | Heating |
| | Schedule timer |
| | Holiday mode |
| | Initial settings |
| | Service |

**<Room sensor settings>**

For room sensor settings it is important to choose the correct room sensor depending on the heating mode the system will operate in.

1. From the Initial settings menu select Room sensor settings.

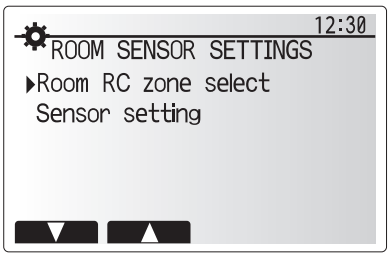


2. When 2-zone temperature control is active and wireless remote controllers are available, from Room RC zone select screen, select zone No. to assign to each remote controller.

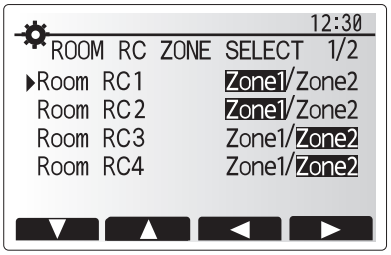


3. From Sensor setting screen, select a room sensor to be used for monitoring the room temperature from Zone1 and Zone2 separately.

| Control option ("Remote Controller Options" | Corresponding initial settings room sensor | |
|---|---|---|
| | Zone1 | Zone2 |
| A | Room RC1-8 (one each for Zone1 and Zone2) | * |
| B | TH1 | * |
| C | Main remote controller | * |
| D | * | * |

* Not specified ( if a field-supplied room thermostat is used)
Room RC1-8 (one each for Zone1 and Zone2) (if a wireless remote controller is used as a room thermostat)

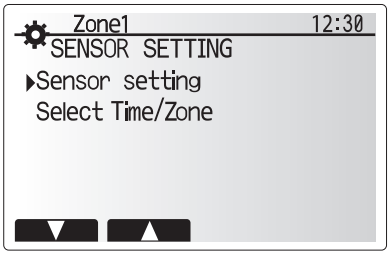


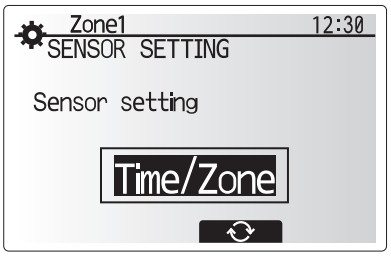


4. From Sensor setting screen, select Time/Zone to make it possible to use different room sensors according to the time schedule set in the Select Time/Zone menu. The room sensors can be switched up to 4 times within 24 hours.

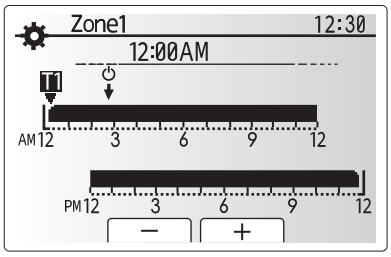


Time/Zone schedule setting screen

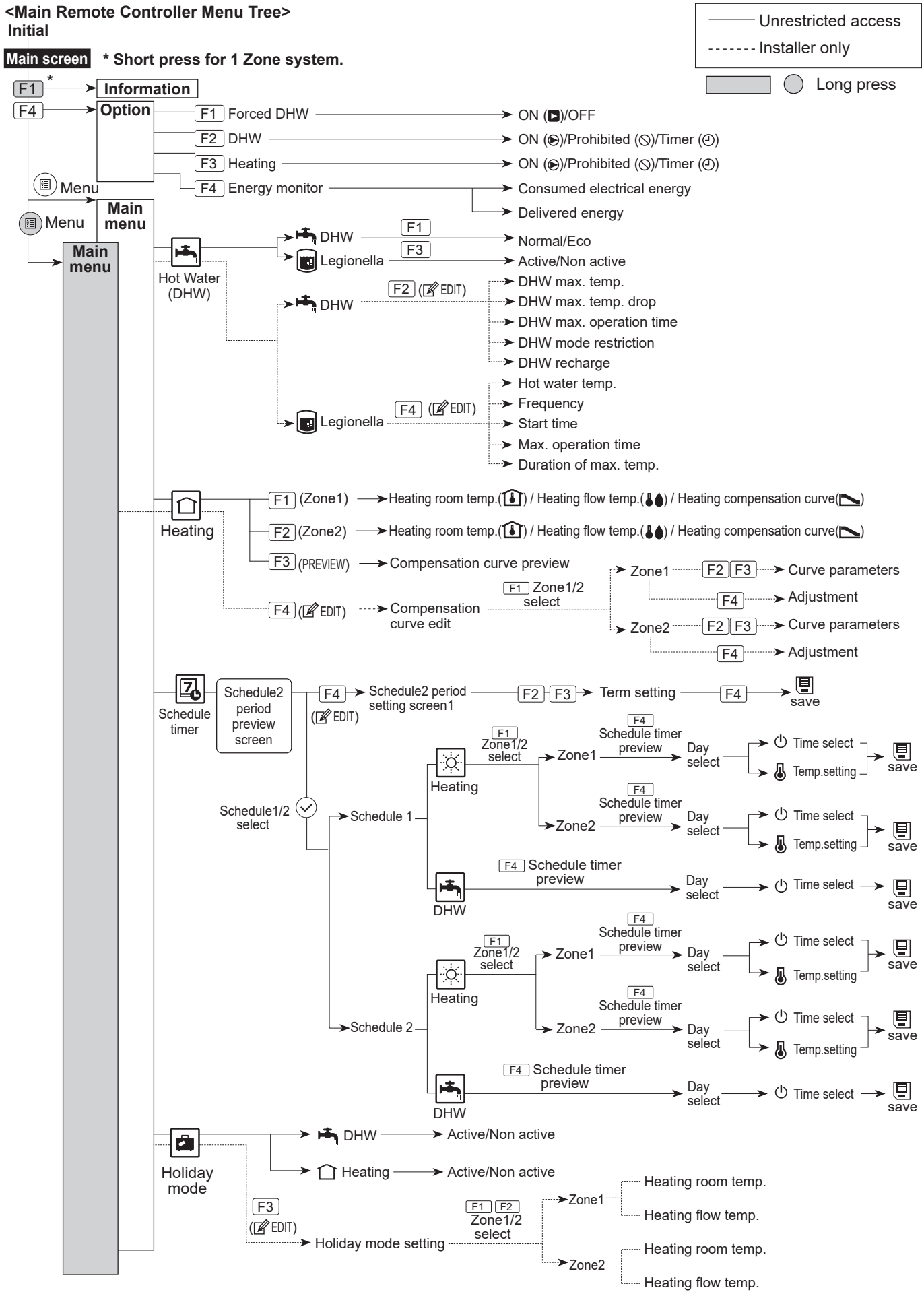


<Continued to next page.>

<Continued from the previous page.>

**<Main Remote Controller Menu Tree>**

**Initial**

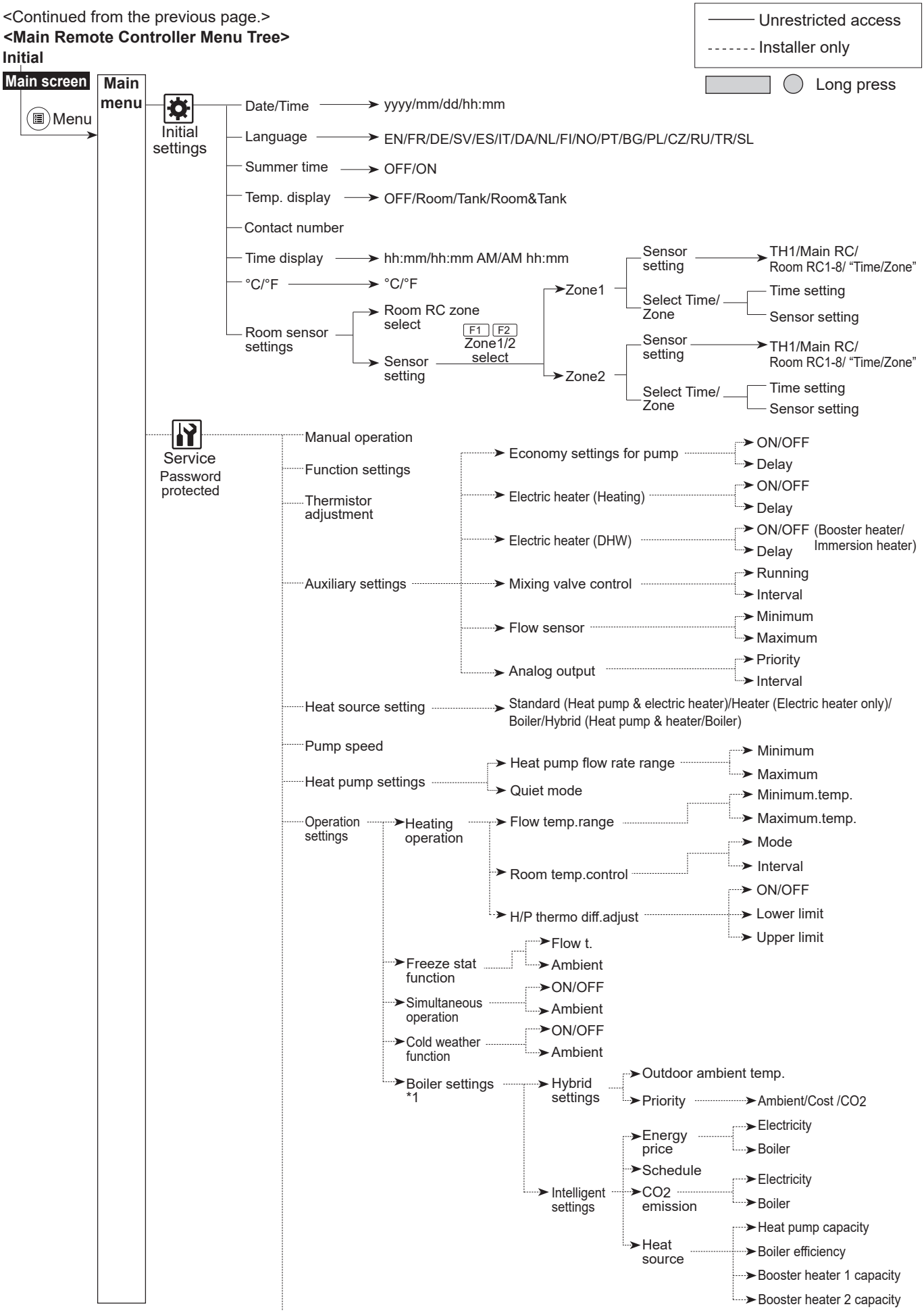


*1 For more details, refer to the installation manual of PAC-TH012HT-E.

<Continued from the previous page.>

**<Main Remote Controller Menu Tree>**

**Initial**

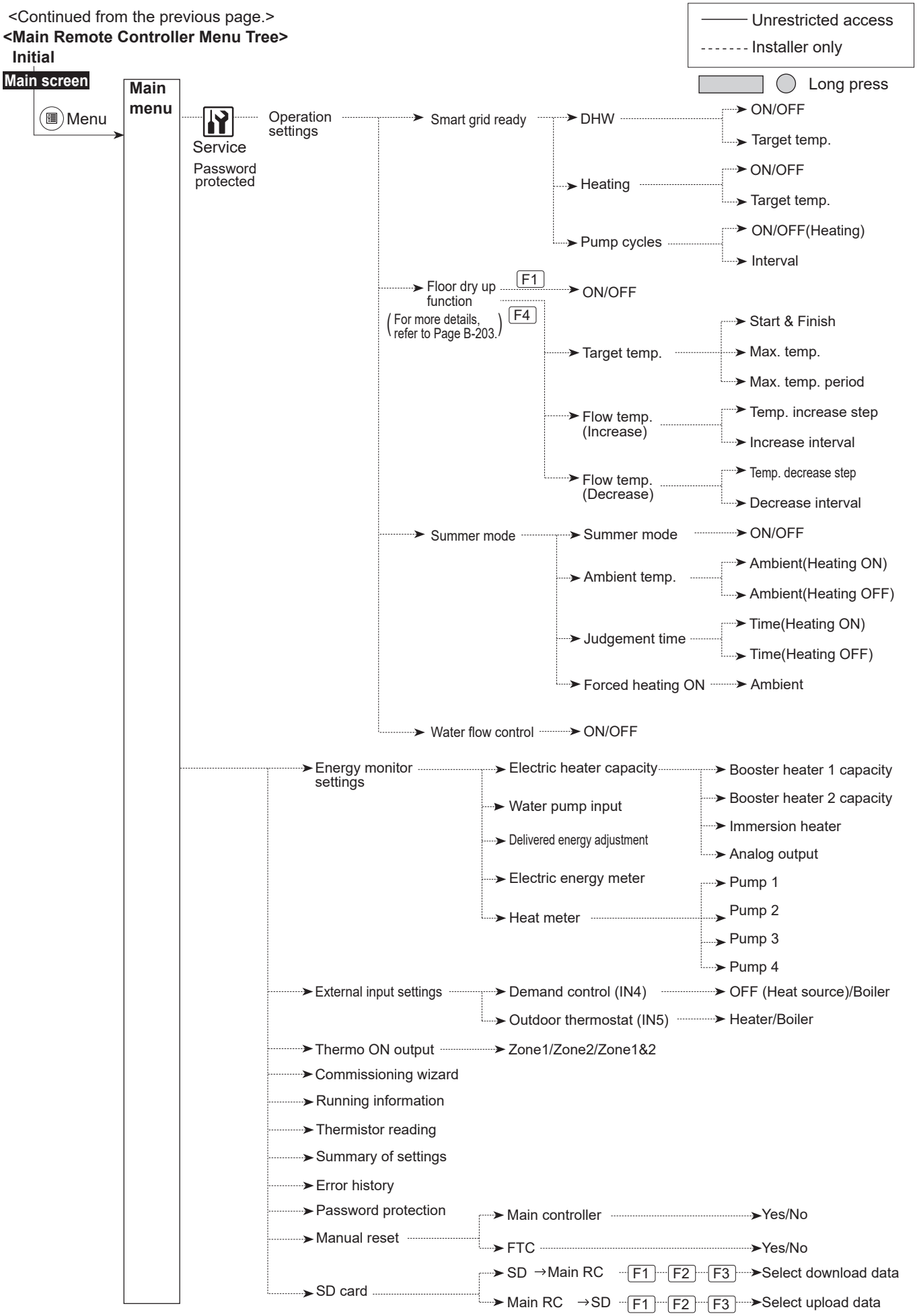

## Domestic Hot Water (DHW)/Legionella Prevention

The domestic hot water and legionella prevention menus control the operation of DHW tank heat ups.

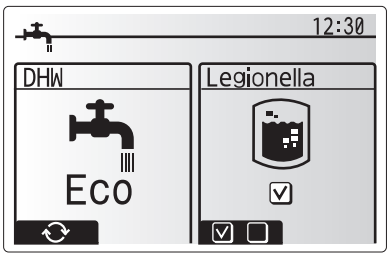


**<DHW mode settings>**

1. Highlight the hot water icon and press CONFIRM.
2. Use button F1 to switch between Normal and Eco heating modes.
3. To edit the mode, press down the MENU button for 3 seconds, then select "hot water".
4. Press F2 key to display the HOT WATER (DHW) SETTING menu.
5. Use F2 and F3 keys to scroll through the menu selecting each component in turn by pressing CONFIRM. See the table below for description of each setting.
6. Enter the desired number using the function keys and press CONFIRM.

| Menu subtitle | Function | Range | Unit | Default value |
|---|---|---|---|---|
| DHW max. temp. | Desired temperature of stored hot water | 40 - 60 | °C | 50 |
| DHW max. temp. drop | Difference in temperature between DHW max. temp. and the temperature at which DHW mode restarts | 5 - 30 | °C | 10 |
| DHW max. operation time | Max. time allowed for stored water heating DHW mode | 30 - 120 | min | 60 |
| DHW mode restriction | The time period after DHW mode when space heating has priority over DHW mode temporarily preventing further stored water heating (Only when DHW max. operation time has passed.) | 30 - 120 | min | 30 |

*** When the DHW max. temp is set over 55°C, the temperature at which DHW mode restarts must be less than 50°C to protect the device.**

**Explanation of DHW operation**

- When the DHW tank temperature drops from "DHW max. temp." by more than the "DHW max. temp. drop" (set by installer), DHW mode operates and the flow from the primary heating circuit is diverted to heat the water in the DHW tank.
- When the temperature of the stored water reaches the 'DHW max. temp.' set by the installer or if the 'DHW max. operation time' set by the installer is exceeded DHW mode ceases to operate.
- Whilst DHW mode is in operation primary hot water is not directed to the space heating circuit.
- Directly after DHW max. operation time 'DHW mode restriction' will routinely operate. The duration of this feature is set by the installer and during its operation, DHW mode can not (normally) be reactivated, allowing time for the system to deliver primary hot water to the space heating if required. However, if at this time there is no current demand for space heating, the system will automatically resume DHW mode. This will continue until it receives a demand for space heating.
- After the 'DHW mode restriction' operation the DHW mode can operate again and DHW tank heating will continue according to system demand.

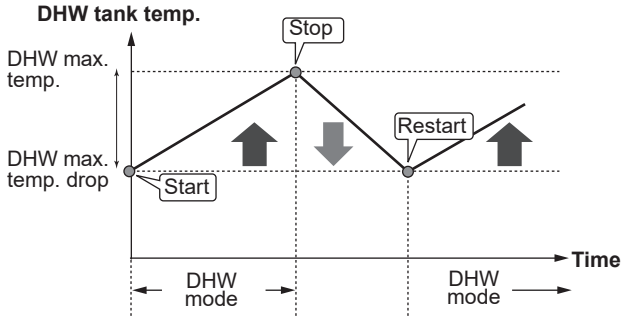


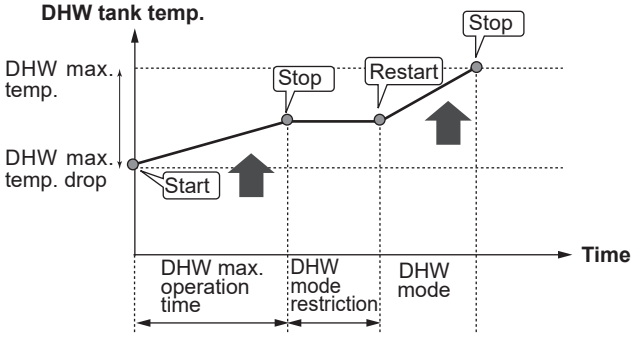


**<Eco mode>**

DHW mode can run in either 'Normal' or 'Eco' mode. Normal mode will heat the water in the DHW tank more quickly using the full power of the heat pump. Eco mode takes a little longer to heat the water in the DHW tank but the energy used is reduced. This is because heat pump operation is restricted using signals from the FTC based on measured DHW tank temperature.

**Note: The actual energy saved in Eco mode will vary according to underground temperature.**

**<DHW recharge>**

Select the amount of DHW. If you need much hot water, select LARGE.

Return to the DHW/legionella prevention menu.

**Note:**

**However, Large mode raises boiling-up frequency, resulting in increase in power consumption.**

## Forced DHW

The forced DHW function is used to force the system to operate in DHW mode. In normal operation the water in the DHW tank will be heated either to the set temperature or for the maximum DHW time, whichever occurs first. However should there be a high demand for hot water 'Forced DHW' function can be used to prevent the system from routinely switching to space heating and continue to provide DHW tank heating.

Forced DHW operation is activated by pressing button F1 and Back button in the 'Option Screen'. After DHW operation finishes, the system will automatically return to normal operation. To cancel forced DHW operation hold down button F1 in the 'Option Screen'.

## Legionella Prevention Mode settings (LP mode)

1. Use button F3 to choose legionella mode active YES/NO.
2. To edit the legionella function, press down the MENU button for 3 seconds and select “hot water”, then press F4 key.
3. Use F1 and F2 keys to scroll through the menu selecting each subtitle in turn by pressing CONFIRM. See the table below for description of each setting.
4. Enter the desired number using the function keys and press CONFIRM.

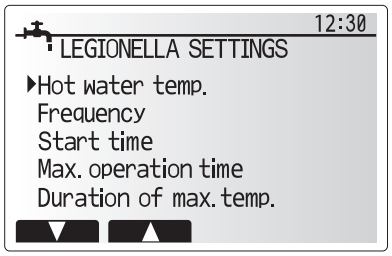


During Legionella Prevention Mode the temperature of the stored water is increased above 60°C to inhibit legionella bacterium growth. It is strongly recommended that this is done at regular intervals. Please check local regulations for the recommended frequency of heat ups.



| Menu subtitle | Function | Range | Unit | Default value |
|---|---|---|---|---|
| Hot water temp. | Desired temp of stored hot water | 60–70 | °C | 65 |
| Frequency | Time between LP mode DHW tank heat ups | 1–30 | day | 15 |
| Start time | Time when LP mode will begin | 0:00–23:00 | - | 03:00 |
| Max. operation time | Maximum time allowed for LP mode DHW tank heat | 1–5 | hour | 3 |
| Duration of max. temp. | The time period after LP mode max. water temp. has been reached | 1–120 | min | 30 |

**If you wish to make changes contact installer.**

**Explanation of Legionella Prevention Mode operation**

- At the time entered by the installer ‘Start time’ flow of useful heat from the system is diverted to heat the water in the DHW tank.
- When the temperature of the stored water exceeds the ‘Hot Water temp.’ set by the installer (above 65°C) primary circuit water is no longer diverted to heat the DHW tank.
- Whilst LP mode is in operation hot water is not directed to the space heating circuit.
- Directly after LP mode operation ‘Duration of max. temp.’ will operate. The duration of this feature is set by the installer and during its operation stored water temperature will be monitored.
- If stored water temperature should drop to LP restart temp., LP mode will restart and primary water flow from the heat source(s) will be directed to the DHW tank to boost the temperature. Once the set time for Duration of Max. temp. has passed LP mode will not recur for the set interval (set by installer).
- It is the responsibility of the installer to ensure the settings for legionella prevention are compliant with local and national guidelines.

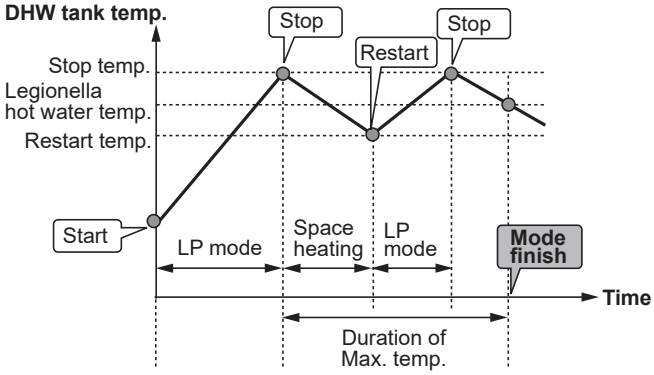


(LP mode: Legionella Prevention mode)

Please note that LP mode uses the assistance of electric heaters to supplement the energy input of the heat pump. Heating water for long periods of time is not efficient and will increase running costs. The installer should give careful consideration to the necessity of legionella prevention treatment whilst not wasting energy by heating the stored water for excessive time periods. The end user should understand the importance of this feature.
**ALWAYS COMPLY WITH LOCAL AND NATIONAL GUIDANCE FOR YOUR COUNTRY REGARDING LEGIONELLA PREVENTION.**

## Heating

The heating menus deal with space heating using normally either a radiator, fan-coil, or underfloor heating system depending on the installation.

There are 3 heating modes
- Heating room temp. (Auto adaptation) ( )
- Heating flow temp. ( )
- Heating compensation curve ( )

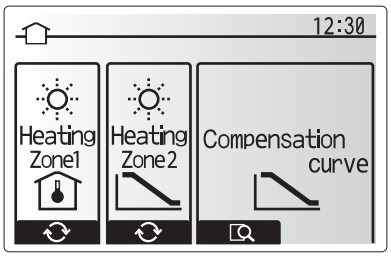


**<Room temp. (Auto adaptation) mode>**
In room temp. (Auto adaptation) mode the controller uses temperature sensors around the heating system to monitor space and flow temperatures. This data is regularly updated and compared to previous data by the controller to predict changes in room temperature and adjust the temperature of water flowing to the space heating circuit accordingly. By monitoring not only the outdoor ambient, but the room and heating circuit water temperatures, the heating is more consistent and sudden spikes in required heat output are reduced. This results in a lower overall flow temperature being required.

**<Flow temp. mode>**
The temperature of the water flowing to the heating circuit is set by the installer to best suit the space heating system design, and user's desired requirements.

**Explanation of compensation curve**
During late spring and summer usually the demand for space heating is reduced. To prevent the heat pump from producing excessive flow temperatures for the primary circuit the compensation curve mode can be used to maximise efficiency and reduce running costs.

The compensation curve is used to restrict the flow temperature of the primary space heating circuit dependent on the outdoor temperature. The FTC uses information from both an outdoor temperature sensor and a temperature sensor on the primary circuit supply to ensure the heat pump is not producing excessive flow temperatures if the weather conditions do not require it.

Your installer will set the parameters of the graph depending on local conditions and type of space heating used in your home. It should not be necessary for you to alter these settings. If however you find that over a reasonable operating period the space heating is not heating or is overheating your home, please contact your installer so they can check your system for any problems and update these settings if necessary.

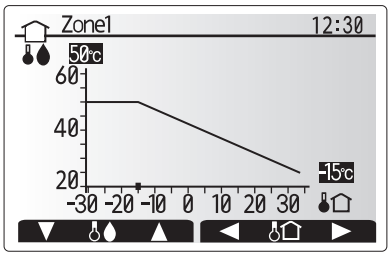


: Flow temp.
: Outdoor ambient temp.

## Holiday Mode

Holiday mode can be used to keep the system running at lower flow temperatures and thus reduced power usage whilst the property is unoccupied. Holiday mode can run either flow temp., room temp., heating, compensation curve heating and DHW all at reduced flow temperatures to save energy if the occupier is absent.

From the main menu screen press button E should be pressed. Be careful not to hold down button E for too long as this will turn off the controller and system.

Once the holiday mode activation screen is displayed you can activate/deactivate and select the duration that you would like holiday mode to run for.

- Press button F1 to activate or deactivate holiday mode.
- Use buttons F2, F3 and F4 to input the date which you would like holiday mode to activate or deactivate holiday mode for space heating.

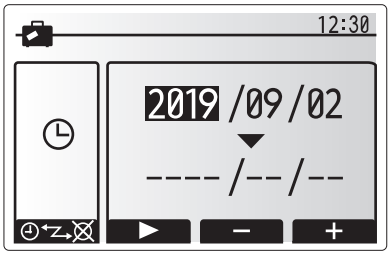


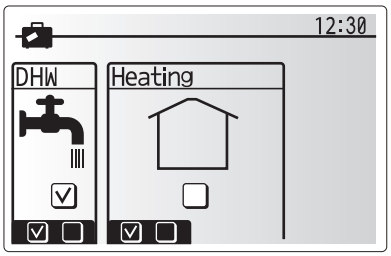


**<Editing holiday mode>**

Refer to the menu tree in “Main remote controller” of Installation Manual.

Should you require the Holiday mode settings e.g. the flow temp. or the room temp. to be altered you should contact your installer.

## Schedule timer

Scheduled timer can be set in two ways, for example; one for summer and the other for winter. (Refer to as “Schedule 1” and “Schedule 2” respectively.) Once the term (months) for the Schedule 2 is specified, rest of the term will be specified as Schedule 1. In each Schedule, an operational pattern of modes (Heating) can be set. If no operational pattern is set for Schedule2, only the pattern for Schedule 1 will be valid. If Schedule 2 is set to full-year (i.e. March to Feb.), only the operational pattern for Schedule 2 will be valid.

**The schedule timer is activated or deactivated in the option screen. (See ‘General Operation’ section)**

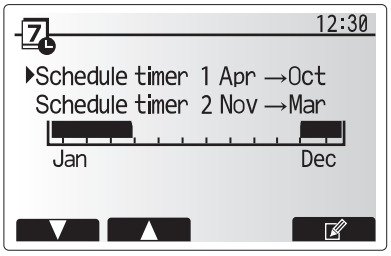


Schedule2 period preview screen

**<Setting the Schedule period>**

1. From the main settings menu use F2 and F3 to highlight the schedule icon then press CONFIRM.
2. The Schedule period preview screen is displayed.
3. To change the Schedule period, press F4. button.
4. The time bar edit screen is displayed.
5. Use F2/F3 button to point at a starting month of the Schedule2, then press CONFIRM.
6. Use F2/F3 button to point at an ending month of the Schedule2, then press CONFIRM.
7. Press F4 to save settings.

**<Setting the Schedule timer>**

1. From the main settings menu use F2 and F3 to highlight the schedule icon then press CONFIRM.
2. From the schedule 2 period preview screen use F1 and F2 to scroll through the selecting each subtitle in turn by pressing CONFIRM.
3. The schedule timer sub menu will be displayed. The icons show the following modes;
   - Heating
   - DHW
4. Use F2 and F3 buttons to move between mode icons press CONFIRM to be shown the PREVIEW screen for each mode.

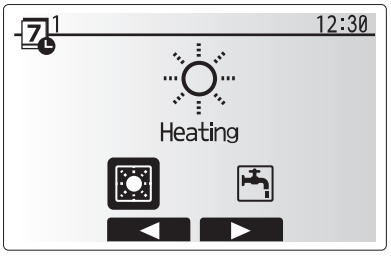


Schedule1 mode select screen

The preview screen allows you to view the current settings. Days of the week are displayed across the top of the screen. Where day appears underlined the settings are the same for all those days underlined.
Hours of the day and night are represented as a bar across the main part of the screen. Where the bar is solid black, space heating is allowed.

5. In the preview menu screen press F4 button.

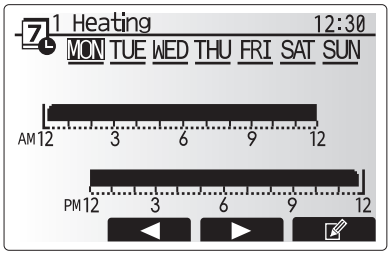


Preview screen

6. First select the days of the week you wish to schedule.
7. Press F2/F3 buttons to move between days and F1 to check or uncheck the box.
8. When you have selected the days press CONFIRM.

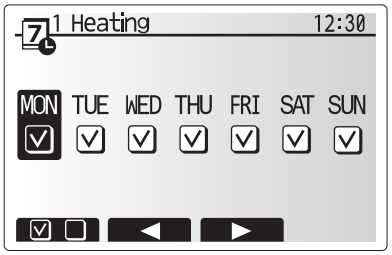


Day of week select screen

9. The time bar edit screen will be displayed.
10. Use buttons F2/F3 to move to the point at which you do not want the selected mode to be active press CONFIRM to start.
11. Use F3 button to set the required time of inactivity then press CONFIRM.
12. You can add up to 4 periods of inactivity within a 24 hour interval.

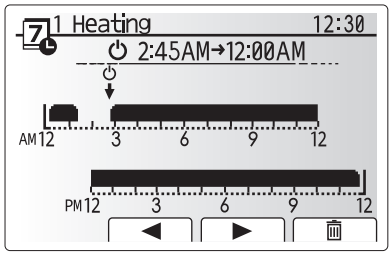


Time of period setting screen 1

13. Press F4 to save settings.

When scheduling heating, button F1 changes the scheduled variable between time and temperature. This enables a lower temperature to be set for a number of hours e.g. a lower temperature may be required at night when the occupants are sleeping.

**Note:**
- **The schedule timer for space heating is set in the same way.**
- **A small rubbish bin character is also displayed choosing this icon will delete the last unsaved action.**
- **It is necessary to use the SAVE function F4 button to save settings. CONFIRM does NOT act as SAVE for this menu.**

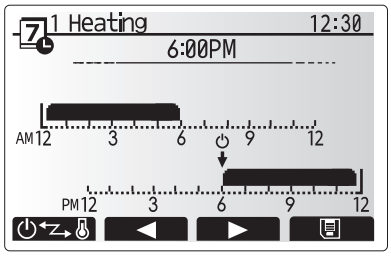


Time of period setting screen 2

## Service Menu

The service menu provides functions for use by installer or service engineer. It is NOT intended the home owner alters settings within this menu. It is for this reason password protection is required to prevent unauthorised access to the service settings.

The factory default password is "0000".
Follow the procedure described in General Operation for the set up operation.

The service menu is navigated using the F1 and F2 buttons to scroll through the functions. The menu is split across two screens and is comprised of the following functions;

1. Manual operation
2. Function settings
3. Thermistor adjustment
4. Auxiliary settings
5. Heat source setting
6. Pump speed
7. Heat pump settings
8. Operation settings
9. Energy monitor settings
10. External input settings
11. Thermo ON output
12. Commissioning wizard
13. Running information
14. Thermistor reading
15. Summary of settings
16. Error history
17. Password protection
18. Manual reset
19. SD card

In this Installation Manual, instructions will be given only for the following functions;

1. Manual operation
2. Auxiliary settings
3. Heat source setting
4. Operation settings
5. Energy monitor settings
6. External input settings
7. Password protection
8. Manual reset

Information on the other functions can be found by consulting the service manual.

Many functions can not be set whilst the heat pump unit is running. The installer should turn off the unit before trying to set these functions. If the installer attempts to change the settings whilst the unit is running the main remote controller will display a reminder message prompting the installer to stop operation before continuing. By selecting “Yes” the unit will cease operation.

**<Manual operation>**

During the filling of the system the water circulation pump and 3-way valve can be manually overridden using manual operation mode.
When manual operation is selected a small timer icon appears in the screen.
The function selected will only remain in manual operation for a maximum of 2 hours. This is to prevent accidental permanent override of the FTC.

►Example
Pressing F3 button will switch manual operation mode ON for the main 3-way valve. When filling of the DHW tank is complete the installer should access this menu again and press F3 to deactivate manual operation of the part.
Alternatively after 2 hours manual operation mode will no longer be active and FTC will resume control of the part.

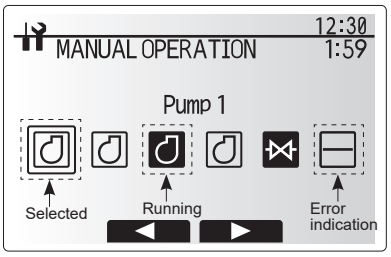

Manual operation menu screen

Manual operation and heat source setting can not be selected if the system is running. A screen will be displayed asking the installer to stop the system before these modes can be activated.
The system automatically stops 2 hours after last operation.

### <Auxiliary settings>

This function is used to set the parameters for any auxiliary parts used in the system

| Menu subtitle | | Function/ Description |
|---|---|---|
| Economy settings for pump | | Water pump stops automatically a specified period of time from when operation is finished. |
| | Delay | Time before pump switches off*1 |
| Electric heater (Heating) | | To select "WITH booster heater (ON)" or "WITHOUT booster heater (OFF)" in Heating mode. |
| | Delay | The minimum time required for the booster heater to turn ON after Heating mode has started. |
| Electric heater (DHW) | | To select "WITH (ON)" or "WITHOUT (OFF)" booster heater or immersion heater individually in DHW mode. |
| | Delay | The minimum time required for the booster heater or immersion heater to turn ON from after DHW mode has started. (This setting is applied for both booster and immersion heater.) |
| Mixing valve control *2 | Running | Period from valve fully open (at a hot water mixing ratio of 100%) to valve fully closed (at a cold water mixing ratio of 100%) |
| | Interval | Interval (min) to control the mixing valve. |
| Flow sensor *3 | Minimum | The minimum flow rate to be detected at flow sensor. |
| | Maximum | The maximum flow rate to be detected at flow sensor. |

*1. Decreasing "time before pump switched off" may increase the duration of stand-by in heating mode.
*2. Set the running time according to the specifications of the actuator of each mixing valve.
It is recommended to set the interval to 2 minutes that is a default value. With the interval set longer, it could take longer to warm up a room.
*3. Do not change the setting since it is set according to the specification of flow sensor attached to the heat pump unit.

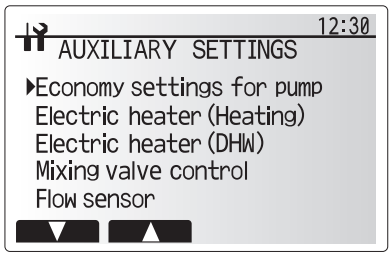

Auxiliary settings menu screen

### <Heat source setting>

The default heat source setting is heat pump and all electric heaters present in the system to be operational. This is referred to as standard operation on the menu.

### <Operation settings>

**Heating operation**

This function allows operational setting of flow temperature range from the heat pump unit and also the time interval at which the FTC collects and processes data for the auto adaptation mode.

| Menu subtitle | | Function | Range | Unit | Default |
|---|---|---|---|---|---|
| Flow temp. range | Minimum temp. | To minimize the loss by frequent ON and OFF in mild outdoor ambient temperature seasons. | 20 to 45 | ºC | 30 |
| | Maximum temp. | To set max. possible flow temperature according to the type of heat emitters. | 35 to 60 | ºC | 50 |
| Room temp. control | Mode | Setting for Room temp. control<br>At Fast mode, target outlet water temperature is set higher than the one set at normal mode. This reduces the time to reach the target room temperature when the room temperature is relatively low.* | Normal/ Fast | — | Normal |
| | Interval | Selectable according to the heat emitter type and the materials of floor (i.e. radiators, floor heating-thick, -thin concrete, wood, etc.) | 10 to 60 | min | 10 |
| Heat pump thermo diff. adjust | On/Off | To minimize the loss by frequent ON and OFF in mild outdoor ambient temperature seasons. | On/Off | — | On |
| | Lower limit | Prohibits heat pump operation until the flow temperature drops below the target flow temperature plus lower limit value. | −9 to −1 | ºC | −5 |
| | Upper limit | Allows heat pump operation until the flow temperature rises above the target flow temperature plus upper limit value. | +3 to +5 | ºC | +5 |

**Note:**
1. The minimum flow temperature that prohibits heat pump operation is 20ºC.
2. The maximum flow temperature that allows heat pump operation equals to the maximum temperature set in the Flow temp. range menu.

* Fast mode is not efficient and will increase running cost when compared to normal mode.

**Freeze stat function**

| Menu subtitle | | Function/ Description |
|---|---|---|
| Freeze stat function *1 | | An operational function to prevent the water circuit from freezing when outdoor ambient temperature drops. |
| | Flow t. | The target outlet water temperature at water circuit when operating in Freeze stat function. *2 |
| | Outdoor ambient temp. | Minimum outdoor ambient temperature which freeze stat function will begin to operate, (3 - 20ºC) or choose**. If asterisk (**) is chosen freeze stat function is deactivated. (i.e. primary water freeze risk)" |

*1 When the system is turned off, freeze stat function is not enabled.
*2 Flow t. is fixed to 20ºC and unchangeable.

**Simultaneous Operation**

For periods of very low outside temperature this mode can be used. Simultaneous operation allows both DHW and space heating to run together by using the heat pump and/or booster heater to provide space heating whilst only the immersion heater provides heating for DHW. This operation is only available if BOTH a DHW tank AND immersion heater are present on the system.

- Range of outdoor ambient temperature at which simultaneous operation starts is −30°C to 10°C (default −15°C).
- System shall automatically return to routine operation. This will happen when the outdoor ambient temperature rises above the selected temperature for this specific mode of operation.

**Cold weather function**

For extremely low outdoor ambient temperature conditions when the heat pump's capacity is restricted the heating or DHW is provided only by the electric booster heater (and immersion if present). This function is intended for use during extreme cold periods only. Extensive use of direct electrical heaters ONLY will result in higher power consumption and may reduce working life of heaters and related parts.

- Range of outdoor ambient temperature at which cold weather function starts is −30°C to −10°C (default −15°C).
- System shall automatically return to routine operation. This will happen when the outdoor temperature rises above the selected temp. for this specific mode of operation.

**Smart grid ready**

In DHW or heating operation, the commands in the table below can be used.

| IN11 | IN12 | Meaning |
|---|---|---|
| OFF (open) | OFF (open) | Normal operation |
| ON (short) | OFF (open) | Switch-on recommendation |
| OFF (open) | ON (short) | Switch-off command |
| ON (short) | ON (short) | Switch-on command |

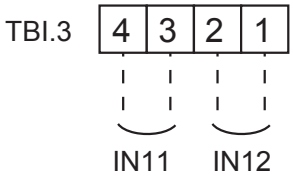


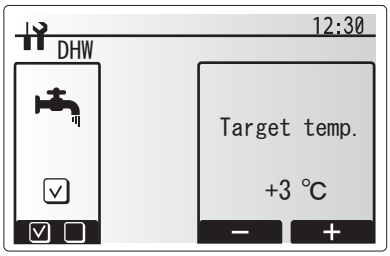


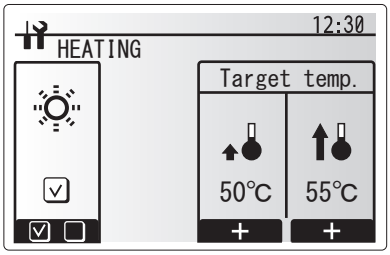

**Floor dry up function**

The Floor dry up function automatically changes the target hot water temperature in stages to gradually dry concrete when this particular type of underfloor heating system is installed.

Upon completion of the operation the system stops all the operations except the Freeze stat. operation.
For Floor dry up function, the target flow temp. of Zone1 is the same as that of Zone2.

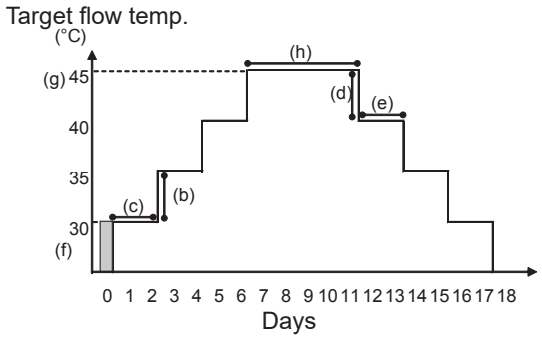


Disconnect wiring to external inputs of room thermostat, demand control, and outdoor thermostat, or the target flow temperature may not be maintained.

| Functions | | Symbol | Description | Option/ Range | Unit | Default |
|---|---|---|---|---|---|---|
| Floor dry up function | | a | Set the function to ON and power on the system using the main remote controller, and the dry up heating operation will start. | On/Off | — | Off |
| Flow temp. (increase) | Flow temp. increase step | b | Sets the increase step of the target flow temperature. | +1 to +10 | ºC | +5 |
| | Increase interval | c | Sets the period for which the same target flow temperature is maintained. | 1 to 7 | day | 2 |
| Flow temp. (decrease) | Flow temp. decrease step | d | Sets the decrease step of the target flow temperature. | −1 to −10 | ºC | −5 |
| | Decrease interval | e | Sets the period for which the same target flow temperature is maintained. | 1 to 7 | day | 2 |
| Target temperature | Start & Finish | f | Sets the target flow temperature at the start and the finish of the operation. | 20 to 60 | ºC | 30 |
| | Max. target temp. | g | Sets the maximum target flow temperature. | 20 to 60 | ºC | 45 |
| | Max. temp. period | h | Sets the period for which the maximum target flow temperature is maintained. | 1 to 20 | day | 5 |

**<Energy monitor settings>**

1. General description

End user can monitor accumulated(*1) 'Consumed electrical energy' and 'Delivered heat energy' in each operation mode(*2) on the main remote controller.

*1 Monthly and Year to date

*2 - DHW operation
- Space heating

Refer to the menu tree in "Main Settings Menu" for how to check the energy, and "6.3 DIP switch functions" for the details on DIP-SW setting.

Either one of the following 2 methods is used for monitoring.

**Note: Method 1 should be used as a guide. If a certain accuracy is required, the 2nd method should be used.**

(1) Calculation internally

Electricity consumption is calculated internally based on the energy consumption of refrigerant and brine circuit, electric heater, water pump(s) and other auxiliaries.*3

Delivered heat is calculated internally by multiplying delta T (Flow and Return temp.) and flow rate measured by the factory fitted sensors.

Set the electric heater capacity and water pump(s) input and specs of additional pump(s) supplied locally. (Refer to the menu tree in "Main Settings Menu")

| | Booster heater1 | Booster heater2 | Immersion heater *1 | Pump1 *2 | Pump2 | Pump3 |
|---|---|---|---|---|---|---|
| EHGT17D-YM9ED | 3 kW | 6 kW | 0 kW | ***(factory fitted pump) | When additional pumps supplied locally are connected as Pump2/3, change setting according to specs of the pumps. | |

*1 Change setting to 1 kW when connecting optional immersion heater "PAC-IH01V2-E".

*2 "***" displayed in the energy monitor setting mode means the factory fitted pump is connected as Pump 1 so that the input is automatically calculated.

When anti-freeze solution (propylene glycol) is used for primary water circuit, set the delivered energy adjustment if necessary.
For further detail of above, refer to the menu tree in "Main Settings Menu".

(2) Actual measurement by external meter (locally supplied)
FTC has external input terminals for 2 'Electric energy meters' and a 'Heat meter'.
If two 'Electric energy meters' are connected, the 2 recorded values will be combined at the FTC and shown on the main remote controller.
(e.g. Meter 1 for H/P power line, Meter 2 for heater power line)
Refer to the [Signal inputs] in section "6.2 Wiring diagrams" for more information on connectable electric energy meter and heat meter.

● Connectable electric energy meter and heat meter

| | | | | | | |
|---|---|---|---|---|---|---|
| ▪ Pulse meter type | Voltage free contact for 12VDC detection by FTC (TBI.2 1pin, TBI.3 5 and 7 pins have a positive voltage.) | | | | | |
| ▪ Pulse duration | Minimum ON time: 40 ms<br>Minimum OFF time: 100 ms | | | | | |
| ▪ Possible unit of pulse | 0.1 | pulse/kWh | 1 | pulse/kWh | 10 | pulse/kWh |
| | 100 | pulse/kWh | 1000 | pulse/kWh | | |

Those values can be set by the main remote controller. (Refer to the menu tree in "Main Settings Menu".)



### <External input settings>

**Demand control (IN4)**

The selection of "OFF", whilst a signal is being sent to IN4, forcefully stops all the heat source operations and the selection of "Boiler" stops operations of heat pump and electric heater and performs boiler operation.

**Outdoor thermostat (IN5)**

The selection of "Heater", whilst a signal is being sent to IN5, performs electric-heater-only operation and the selection of "Boiler" performs boiler operation.

### <Password protection>

Password protection is available to prevent unauthorised access to the service menu by untrained persons.

**Resetting the password**

If you forget the password you entered, or have to service a unit somebody else installed, you can reset the password to the factory default of **0000**.

1. From the main settings menu scroll down the functions until Service Menu is highlighted.
2. Press CONFIRM.
3. You will be prompted to enter a password.
4. Hold down buttons F3 and F4 together for 3 seconds
5. You will be asked if you wish to continue and reset the password to default setting.
6. To reset press button F3.
7. The password is now reset to **0000**.

Password input screen

Password verify screen

### <Manual reset>

Should you wish to restore the factory settings at any time you should use the manual reset function. Please note this will reset ALL functions to the factory default settings.

### 6.7.3 DIP Switch Function(C.B.)

Located on the C.B. printed circuit board are 7 sets of small white switches known as DIP switches. The DIP switch number is printed on the circuit board next to the relevant switches. The word ON is printed on the circuit board and on the DIP switch block itself. To move the switch you will need to use a pin or the corner of a thin metal ruler or similar.

DIP switch settings are listed below in Table 6.7.1.
Only an authorised installer can change DIP switch setting under one's own responsibility according to the installation condition. Make sure to turn off heat pump unit power supplies before changing the switch settings.

| DIP switch | | Function | OFF | ON | Effective timing | Default settings |
|---|---|---|---|---|---|---|
| SW1 | SW1-1 | — | — | — | — | OFF |
| | SW1-2 | Abnormal history clear | Normal | Clear | Always | OFF |
| SW4 | SW4-1 | — | — | — | — | OFF |
| | SW4-2 | — | — | — | — | OFF |
| SW5 | SW5-1 | — | — | — | — | OFF |
| | SW5-2 | Power failure automatic recovery*1 | No auto recovery | Auto recovery | When power supply ON | ON |
| | SW5-3 | — | — | — | — | OFF |
| | SW5-4 | — | — | — | — | OFF |
| | SW5-5 | — | — | — | — | OFF |
| | SW5-6 | — | — | — | — | OFF |
| SW6 | SW6-1 | Brine pump manual operation | Pump OFF | Pump ON | Always (ONLY Brine pump manual operation) | OFF |
| | SW6-2 | — | — | — | — | OFF |
| | SW6-3 | Brine pump manual operation | Inactive | Active | When power supply ON | OFF |
| | SW6-4 | Model select | Heat pump setting | | — | ON |
| | SW6-5 | | | | | ON |
| | SW6-6 | | | | | OFF |
| | SW6-7 | | | | | ON |
| | SW6-8 | | | | | OFF |
| SW7 *2 | SW7-1 | — | — | — | — | OFF |
| | SW7-2 | — | — | — | — | OFF |
| | SW7-3 | — | — | — | — | OFF |
| | SW7-4 | — | — | — | — | OFF |
| | SW7-5 | — | — | — | — | OFF |
| | SW7-6 | Starting brine temp. of borehole freeze prevention | −2°C | 0°C | Always | OFF |
| SW8 | SW8-1 | Brine pump speed adjustment | See 4.4 Brine Pipe Work | | Always | OFF |
| | SW8-2 | — | — | — | — | OFF |
| | SW8-3 | — | — | — | — | OFF |
| SW9 | SW9-1 | Brine pump rotational speed adjustment | See 4.4 Brine Pipe Work | | Always | OFF |
| | SW9-2 | | | | | OFF |
| | SW9-3 | | | | | OFF |
| | SW9-4 | | | | | OFF |

<Table 6.7.1>

**Note:**

***1 "Power failure automatic recovery" can be set by either remote controller or this DIP SW. If one of them is set to ON, "Auto recovery" activates.**

***2 Please do not use SW7-3, 4 usually. Trouble might be caused by the usage condition.**

### 6.7.4 Connecting inputs/outputs

#### ■ Inputs/Outputs

| Name | Connector | Item |
|---|---|---|
| MC | TB-U/V/W | Motor for compressor (Mediate Power board) |
| MBP | CNF1 | Brine pump |
| 63H | 63H | High Pressure switch |
| 63HS | 63HS | High Pressure Sensor |
| FS | 63L | Flow switch (Brine circuit) |
| TH3 | TH3 | Thermistor (Ref. liquid temp.) |
| TH4 | TH4 | Thermistor (Discharge temp.) |
| TH7 | TH7/6 | Thermistor (Outdoor temp.) |
| TH8 | CN6 | Thermistor (Heat sink temp.) |
| TH32 | TH32 | Thermistor (Brine inlet temp.) |
| TH33 | TH33 | Thermistor (Comp. surface temp.) |
| TH34 | TH34 | Thermistor (Brine outlet temp.) |
| LEV-A | LEV-A | Linear Expansion Valve |
| CNM | CNM | Connection for option |

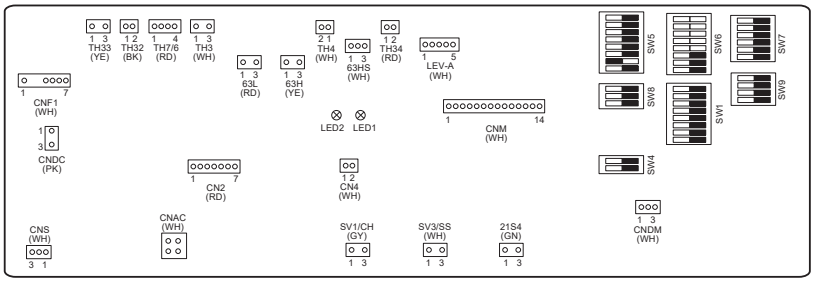

## 6.8 Service and Maintenance

The heat pump unit must be serviced once a year by a qualified individual. Servicing and maintenance of the outdoor unit should only be done by a Mitsubishi Electric trained technician with relevant qualifications and experience. Any electrical work should be done by a trades person with the appropriate electrical qualifica-tions. Any maintenance or 'DIY' fixes done by a non-accredited person could invalidate the Warranty and/or result in damage to the heat pump unit and injury to the per-son.

### ■ Basic Troubleshooting

| No. | Fault symptom | Possible cause | Explanation - Solution |
|---|---|---|---|
| 1 | Main remote controller display is blank. | 1. There is no power supply to main remote controller.<br><br>2. Power is supplied to main remote controller, however, the display on the main remote controller does not appear. | 1. Check LED2 on FTC. (See "5. WIRING DIAGRAM".)<br>(i) When LED2 is lit.<br>Check for damage or contact failure of the main remote controller wiring.<br>(ii) When LED2 is blinking.<br>Refer to No. 5 below.<br>(iii) When LED2 is not lit.<br>Refer to No. 4 below.<br>2. Check the following:<br>• Disconnection between the main remote controller cable and the FTC control board<br>• Failure of the main remote controller if "Please Wait" is not displayed.<br>• Refer to No. 2 below if "Please Wait" is displayed. |
| 2 | "Please Wait" remains displayed on the main remote controller. | 1. "Please Wait" is displayed for up to 6 minutes.<br>2. Communication failure between the main remote controller and FTC<br>3. Communication failure between FTC and controller circuit board | 1. Normal operation<br>2, Main remote controller start up checks/procedure.<br>3. (i) If "0%" or "50–99%" is displayed below "Please Wait" there is a communication error between the main remote controller and the FTC control board.<br>• Check wiring connections on the main remote controller.<br>• Replace the main remote controller or the FTC control board.<br>(ii) If "1–49%" is displayed there is a communication error between controller circuit board and FTC control board.<br>• Check the wiring connections on the controller circuit board and the FTC control board.<br>(Ensure the wiring connections between CN1 on the FTC control board and CNS on the controller circuit board)<br>• Replace the controller circuit board and/or the FTC control board. |
| 3 | The main screen appears with a press of the "ON" button, but disappears in a second. | The main remote controller operations do not work for a while after the settings are changed in the service menu. This is because the system takes time to apply the changes. | Normal operation<br>The FTC is applying updated settings made in the service menu. Normal operation will start shortly. |
| 4 | LED2 on FTC is off. (See "6.2 Wiring diagrams".) | When LED1 on FTC is also off. (See "6.2 Wiring diagrams".)<br>1. The controller circuit board unit is not supplied at the rated voltage.<br><br>2. Faulty connector wiring<br><br>3. FTC failure | 1. Check the voltage across the terminals L and N or L3 and N on the controller circuit board (See "6.4 Field wiring".)<br>• When the voltage is not 220 to 240 V AC, check wiring of the unit and of the breaker.<br>• When the voltage is at 220 to 240 V AC, go to "2." below.<br>• Check the N.F.board and TB1 cable.<br>2. Check the voltage across the outdoor unit terminals S1 and S2. (See "6.4 Field wiring".)<br>• Check the cable between the terminals and N.F. board<br>• Check the cable between CNAC1 of the N.F.board and CNAC of the controller circuit board.<br>• Check the cable between CN01 of the FTC board and CNS of the controller circuit board.<br>3. Check the FTC control board.<br>• Check the fuse on FTC control board.<br>• Check for faulty wiring.<br>• If no problem found with the wiring, the FTC control board is faulty. |
| | | When LED1 on FTC is lit.<br>Incorrect setting of refrigerant address.<br>(None of the refrigerant address is set to "0".) | Set the refrigerant address to "0".<br>(Set refrigerant address using SW1(3-6) on controller circuit board.) |
| 5 | LED2 on FTC is blinking. (See "6.2 Wiring diagrams".) | When LED1 is also blinking on FTC .<br>Faulty wiring between FTC and controller circuit board | Check for faulty wiring between FTC and controller circuit board. |
| | | When LED1 on FTC is lit.<br>1. Short-circuited wiring in main remote controller<br><br>2. Main remote controller failure | 1., 2.<br>Remove main remote controller wires and check LED2 on FTC. (See "6.2 Wiring diagrams".)<br>• If LED2 is blinking check for short circuits in the main remote controller wiring.<br>• If LED2 is lit, wire the main remote controller again and:<br>- if LED2 is blinking, the main remote controller is faulty;<br>- if LED2 is lit, faulty wiring of the main remote controller has been corrected. |
| 6 | LED4 on FTC is off. (See "6.2 Wiring diagrams".) | 1. SD memory card is NOT inserted into the memory card slot with correct orientation.<br>2. Not an SD standards compliant memory card. | 1. Correctly insert SD memory card in place until a click is heard.<br>2. Use an SD standards compliant memory card. (Refer to installation manual, "6.4.5 Using SD memory card".) |
| | LED4 on FTC is blinking. (See "6.2 Wiring diagrams".) | 1. Full of data.<br>2. Write-protected.<br>3. NOT formatted.<br>4. Formatted in NTFS file system. | 1. Move or delete data, or replace SD memory card with a new one.<br>2. Release the write-protect switch.<br>3. Refer to installation manual, "6.4.5 Using SD memory card".<br>4. FTC control board is Not compatible with NTFS file system. Use an SD memory card formatted in FAT file system. |

| No. | Fault symptom | Possible cause | Explanation - Solution |
|---|---|---|---|
| 7 | No water at hot tap. | 1. Cold main off<br>2. Strainer (local supply) blocked. | 1. Check and open stop cock.<br>2. Isolate water supply and clean strainer. |
| 8 | Cold water at tap. | 1. Hot water run out.<br>2. Prohibit, schedule timer or holiday mode selected or demand control input (IN4) or smart grid ready (switch-off command).<br>3. Heat pump not working.<br>4. Booster heater cut-out tripped.<br>5. The earth leakage circuit breaker for booster heater breaker (ECB1) tripped.<br>6. The booster heater thermal cut-out has tripped and cannot be reset using the manual reset button.<br>7. Immersion heater cut-out tripped.<br>8. Immersion heater breaker (ECB2) tripped.<br>9. 3-way valve fault | 1. Ensure DHW mode is operating and wait for DHW tank to re-heat.<br>2. Check settings and change as appropriate.<br>3. Check heat pump.<br>4. Check booster heater thermostat and press reset button if safe.<br>Reset button is located on the side of booster heater, covered with white rubber cap. See "6.5.1 Component parts" to find out its position.<br>5. Check the cause and reset if safe.<br>6. Check resistance across the thermal cut-out, if open then the connection is broken and the booster heater will have to be replaced.<br>Contact your Mitsubishi Electric dealer.<br>7. Check immersion heater thermostat and press reset button, located on immersion heater boss, if safe. If the heater has been operated with no water inside it may have failed, so please replace it with a new one.<br>8. Check the cause and reset if safe.<br>9. Check plumbing/wiring to 3-way valve.<br>(i) Manually override 3-way valve using the main remote controller. (Refer to <Manual operation> in "6.7 System setup") If the valve does not still function, go to (ii) below.<br>(ii) Replace 3-way valve coil. If the valve does not still function, go to (iii) below.<br>(iii) Replace 3-way valve. (Refer to Service manual.) |
| 9 | Water heating takes longer. | 1. Heat pump not working.<br>2. Booster heater cut-out tripped.<br>3. Booster heater breaker (ECB1) tripped.<br>4. The booster heater thermal cut-out has tripped and cannot be reset using the manual reset button.<br>5. Immersion heater cut-out has been triggered.<br>6. Immersion heater breaker (ECB2) tripped.<br>7. Flow rate of the sanitary circuit may be reduced. | 1. Check heat pump.<br>2. Check booster heater thermostat and press reset button if safe.<br>Reset button is located on the side of booster heater, covered with white rubber cap. See "6.5.1 Component parts" to find out its position.<br>3. Check the cause and reset if safe.<br>4. Check resistance across the thermal cut-out, if open then connection is broken and the booster heater will have to be replaced.<br>Contact your Mitsubishi Electric dealer.<br>5. Check immersion heater thermostat and press reset button located on immersion heater boss, if safe. If the heater kept running with no water inside, this may have resulted in failure, so replace it with a new one.<br>6. Check the cause and reset if safe.<br>7. Check the following items<br>• Check for trapped air in water pump (sanitary circuit).<br>• Check if the speed of water pump (sanitary circuit) is set to 2.<br>• Check water pump (sanitary circuit) for malfunction. (Refer to Service manual.)<br>• Replace plate heat exchanger (water - water) or scale trap, if there are a blockage which blocks the sanitary circuit. |
| 10 | Temperature of DHW tank water dropped. | When DHW operation is not running, the DHW tank emits heat and the water temperature decreases to a certain level. If water in the DHW tank is reheated frequently because of a significant drop in water temperature, check for the following.<br>1. Water leakage in the pipes that connect to the DHW tank<br>2. Insulation material coming loose or off.<br>3. 3-way valve failure<br>4. Water pump (sanitary circuit) speed setting failure | 1. Take the following measures.<br>• Retighten the nuts holding the pipes onto the DHW tank.<br>• Replace seal materials.<br>• Replace the pipes.<br>2. Fix insulation.<br>3. Check plumbing/wiring to 3-way valve.<br>(i) Manually override 3-way valve using the main remote controller. (Refer to <Manual operation> in "6.7 System setup".) If the valve does not still function, go to (ii) below.<br>(ii) Replace 3-way valve motor. If the valve does not still function, go to (iii) below.<br>(iii) Replace 3-way valve. (Refer to Service manual.)<br>4. Water pump (sanitary circuit) MUST be set to speed 2.<br>When it set to speed 1, hot water would be mixed with cold water due to circulation. |
| 11 | Hot or warm water from cold tap. | Heat of hot water pipe is transferred to cold water pipe. | Insulate/re-route pipework. |
| 12 | Water leakage | 1. Poorly sealed connections of water circuit components<br>2. Water circuit components reaching the end of life | 1. Tighten connections as required.<br>2. Refer to PARTS CATALOG for expected part lifetimes and replace them as necessary. |

| No. | Fault symptom | Possible cause | Explanation - Solution |
|---|---|---|---|
| 13 | Heating system does not reach the target temperature. | 1. Prohibit, schedule timer or holiday mode selected or demand control input (IN4) or smart grid ready (switch-off command).<br>2. Check settings and change as appropriate.<br>3. The temperature sensor is located in a room that has a different temperature relative to that of the rest of the house.<br>4. Heat pump not working.<br>5. Booster heater cut-out tripped.<br>6. Booster heater breaker (ECB1) tripped.<br>7. The booster heater thermal cut-out tripped and cannot be reset using the manual reset button.<br>8. Incorrectly sized heat emitter.<br>9. 3-way valve failure<br>10. Battery problem (wireless control only)<br>11. If a mixing tank is installed, the flow rate between the mixing tank and the unit is less than that between the mixing tank and the local system. | 1. Check settings and change as appropriate.<br>2. Check the battery power and replace if flat.<br>3. Relocate the temperature sensor to a more suitable room.<br>4. Check heat pump.<br>5. Check booster heater thermostat and press reset button if safe.<br>Reset button is located on the side of booster heater, covered with white rubber cap. (See "6.5.1 Component parts" for position.)<br>6. Check the cause of the trip and reset if safe.<br>7. Check resistance across the thermal cut-out, if open then the connection is broken and the booster heater will have to be replaced.<br>Contact your Mitsubishi Electric dealer.<br>8. Check the heat emitter surface area is adequate<br>Increase size if necessary.<br>9. Check plumbing/wiring to 3-way valve.<br>(i) Manually override 3-way valve using the main remote controller. (Refer to <Manual operation> in "6.7 System setup".) If the 3-way valve does not function, go to (ii) below.<br>(ii) Replace 3-way valve motor. If the 3-way valve coil is replaced but the 3-way valve does not function go to (iii) below.<br>(iii) Replace 3-way valve. (Refer to Service manual.)<br>10. Check the battery power and replace if flat.<br>11. Increase the flow rate between the mixing tank and the unit decrease that between the mixing tank and the local system. |
| 14 | In 2-zone temperature control, only Zone2 does not reach the target temperature. | 1. When Zone1 and Zone2 are both in heating mode, the hot water temperature in Zone2 does not exceed that in Zone1.<br>2. Faulty wiring of motorized mixing valve<br>3. Faulty installation of motorized mixing valve<br>4. Incorrect setting of Running time<br>5. Motorized mixing valve failure | 1. Normal action no action necessary.<br>2. Refer to installation manual, "6.4.3 Wiring for 2-zone temperature control".<br>3. Check for correct installation. (Refer to the manual included with each motorized mixing valve.)<br>4. Check for correct setting of Running time.<br>5. Inspect the mixing valve. (Refer to the manual included with each motorized mixing valve.) |
| 15 | After DHW operation room temperature rises slightly. | At the end of the DHW mode operation the 3-way valve diverts hot water away from the DHW circuit into space heating circuit.<br>This is done to prevent the unit components from overheating.<br>The amount of hot water directed into the space heating circuit varies according to the type of the system and of the pipe run between the plate heat exchanger and the unit. | Normal operation no action necessary. |
| 16 | The room temperature rises during DHW operation. | 3-way valve failure | Check the 3-way valve.<br>(i) Manually override 3-way valve using the main remote controller. (Refer to <Manual operation> in "6.7 System setup".) If the 3-way valve does not function, go to (ii) below.<br>(ii) Replace 3-way valve coil. If the 3-way valve coil is replaced but the 3-way valve does not function go to (iii) below.<br>(iii) Replace 3-way valve. (Refer to Service manual.) |
| 17 | Water discharges from pressure relief valve.<br>(Primary circuit) | 1. If continual – pressure relief valve could bite foreign objects and the valve seat may be damaged.<br>2. If intermittent – expansion vessel charge may have reduced/bladder perished. | 1. Turn the handle on the pressure relief valve several turns. If leakage persists, replace the pressure relief valve with a new one.<br>2. Check pressure in expansion vessel.<br>Recharge to 1 bar if necessary.<br>If bladder perished replace expansion vessel with a new one. |
| 18 | Water discharges from pressure relief valve.<br>(Sanitary circuit) | 1. If continual – field supplied pressure reducing valve not working.<br>2. If continual – pressure relief valve could bite foreign objects and the valve seat may be damaged.<br>3. If intermittent – expansion vessel charge may have reduced/bladder perished.<br>4. DHW tank may have subjected to backflow. | 1. Check function of pressure reducing valve and replace if necessary.<br>2. Turn the handle on the pressure relief valve several turns. If leakage persists, replace the pressure relief valve with a new one.<br>3. Check gas-side pressure in expansion vessel.<br>Recharge to correct precharge pressure if necessary.<br>If bladder perished replace expansion vessel with a new one with appropriate pre-charge.<br>4. Check the pressure in DHW tank. If pressure in DHW tank is similar to that in the incoming mains, cold water supply that merges with incoming mains water supply could flow back to DHW tank. Investigate source of back-feed and rectify error in pipework/fitting configuration. Adjust pressure in cold supply. |
| 19 | Noisy water circulation pump | Air in water circulation pump. | Use manual and automatic air vents to remove air from system.<br>Top up water if necessary to achieve 1 bar on primary circuit. |

<table>
<tr><th>No.</th><th>Fault symptom</th><th>Possible cause</th><th>Explanation - Solution</th></tr>
<tr><td>20</td><td>Noise during hot water draw off typically worse in the morning.</td><td>1. Loose airing cupboard pipework.<br>2. Heaters switching on/off.</td><td>1. Install extra pipe fastening clips.<br>2. Normal operation no action necessary.</td></tr>
<tr><td>21</td><td>Mechanical noise heard coming from the unit.</td><td>1. Heaters switching on/off.<br>2. 3-way valve changing position between DHW and heating mode.<br>3. Heat pump unit (compressor) running</td><td>Normal operation no action necessary.</td></tr>
<tr><td>22</td><td>Water circulation pump runs for a short time unexpectedly.</td><td>Water circulation pump jam prevention mechanism (routine) to inhibit the build-up of scale.</td><td>Normal operation no action necessary.</td></tr>
<tr><td>23</td><td>Milky/Cloudy water (Sanitary circuit)</td><td>Oxygenated water</td><td>Water from any pressurised system will release oxygen bubbles when water is running. The bubbles will settle out.</td></tr>
<tr><td>24</td><td>Heating mode has been on standby for a long time (does not start operation smoothly.)</td><td>The time of “Delay” set in “Economy settings for pump” is too short. (Go to “Service menu” → “Auxiliary settings” → “Economy settings for pump”).</td><td>Increase the time of “Delay” in “Economy settings for pump” .</td></tr>
<tr><td>25</td><td>The heat pump unit that was running in the heating mode before power failure is running in the DHW mode after power recovery.</td><td>The heat pump unit is designed to run in an operation mode with a higher priority (i.e. DHW mode in this case) at power recovery.</td><td>• Normal operation.<br>• After the DHW max. operation time has elapsed or the DHW max. temperature has been reached, the DHW mode switches to the other mode (ex. Heating mode).</td></tr>
<tr><td>26</td><td>The energy monitor value seems not correct.<br><br>Note:<br>There could be some discrepancies between the actual and the calculated values.<br>If you seek for accuracy, please make sure to connect power meter(s) and heat meter to FTC board. Both should be locally supplied.</td><td>1. Incorrect setting of the energy monitor</td><td>1. Check the setting by following the procedure below.<br>(1) Check if the DIP switch on FTC board is set as the table below.<br>Consumed electric energy<br><table><tr><th>SW3-4</th><th>Electric energy meter (Local supply)</th></tr><tr><td>OFF</td><td>Without</td></tr><tr><td>ON</td><td>With</td></tr></table>Delivered heat energy<br><table><tr><th>SW3-8</th><th>Heat meter (Local supply)</th></tr><tr><td>OFF</td><td>Without</td></tr><tr><td>ON</td><td>With</td></tr></table>(2) In the case external electric energy meter and/or heat meter is not used, check if the setting for electric heater and water pump(s) input is correct by referring to <Energy monitor setting> in "6.7 System setup".<br>(3) In the case external electric energy meter and/or heat meter is used, check if the unit of output pulse on external meter matches with the one set at the main remote controller by referring to <Energy monitor setting> in "6.7 System set-up".</td></tr>
<tr><td></td><td></td><td>2. Non-connectable type of external meter (local supply) is connected.</td><td>2. Check if the external meter (local supply) is connectable type by referring to <Energy monitor setting>" in "6.7 System setup".</td></tr>
<tr><td></td><td></td><td>3. External meter (local supply) failure</td><td>3. Check if signal is sent to IN8 to IN10 properly. (Refer to section 6.2 Wiring diagrams)<br>Replace the external heat meter if defective.</td></tr>
<tr><td></td><td></td><td>4. FTC board failure</td><td>4. Check the FTC control board.<br>• Check for faulty wiring.<br>• If no problem found with the wiring, the FTC control board is faulty. Replace the board.</td></tr>
<tr><td>27</td><td>Heat pump is forced to turn ON and OFF.</td><td>Smart grid ready input (IN11 and IN12) is used, and switch-on and off commands are input.</td><td>Normal operation no action necessary.</td></tr>
</table>

## ■ Error Codes (FTC)

| Code | Error | Action |
|---|---|---|
| L3 | Circulation water temperature overheat protection | Flow rate may be reduced. Check for;<br>• Water leakage<br>• Strainer blockage<br>• Water circulation pump function (Error code may display during filling of primary circuit, complete filling and reset error code.) |
| L4 | DHW tank water temperature overheat protection | Check the immersion heater and it's contactor. |
| L5 | FTC temperature thermistor (THW1, THW2, THW5A, THW5B, THW6, THW7, THW8, THW9) failure | Check resistance across the thermistor. |
| L6 | Circulation water freeze protection | See Action for L3. |
| L8 | Heating operation error | Check and re-attach any thermistors that have become dislodged. |
| L9 | Low primary circuit flow rate detected by flow sensor or flow switch (flow switches 1, 2, 3) | See Action for L3. If the flow sensor or flow switch itself does not work, replace it.<br>**Caution: The pump valves may be hot, please take care.** |
| LC | Boiler circulation water temperature overheat protection | Check if the setting temperature of the Boiler for heating exceeds the restriction. (See the manual of the thermistors "PAC-TH012HT-E") |
| | | Flow rate of the heating circuit from the boiler may be reduced. Check for<br>• water leakage,<br>• strainer blockage<br>• water circulation pump function. |
| LD | Boiler temperature thermistor (THWB1) failure | Check resistance across the thermistor. |
| LE | Boiler operation error | See Action for L8. Check the status of the boiler. |
| LF | Flow sensor failure | Check flow sensor cable for damage or loose connections. |
| LH | Boiler circulation water freeze protection | Flow rate of the heating circuit from the boiler may be reduced. Check for<br>• water leakage<br>• strainer blockage<br>• water circulation pump function. |
| LJ | DHW operation error (type of external plate HEX) | • Check for disconnection of DHW tank water temp. thermistor (THW5B).<br>• Flow rate of the sanitary circuit may be reduced.<br>• Check for water circulation pump function. |
| LL | Setting errors of DIP switches on FTC control board | For boiler operation, check that DIP SW1-1 is set to ON (With Boiler) and DIP SW2-6 is set to ON (With Mixing Tank).<br>For 2-zone temperature control, check DIP SW2-7 is set to ON (2-zone) and DIP SW2-6 is set to ON (With Mixing Tank). |
| LP | Out of water flow rate range | Check the installation Table 6.6.2<br>Check remote controller settings (Service menu / heat pump flow rate range)<br>See Action for L3. |
| J0 | Communication failure between FTC and wireless receiver | Check connection cable for damage or loose connections. |
| P1 | Thermistor (Room temp.) (TH1) failure | Check resistance across the thermistor. |
| P2 | Thermistor (Ref. liquid temp.) (TH2) failure | Check resistance across the thermistor. |
| P6 | Anti-freeze protection of plate heat exchanger | See Action for L3.<br>Check for correct amount of refrigerant. |
| J1 - J8 | Communication failure between wireless receiver and wireless remote controller | Check wireless remote controller's battery is not flat.<br>Check the pairing between wireless receiver to wireless remote controller.<br>Test the wireless communication. (See the manual of wireless system) |
| E0 - E5 | Communication failure between main remote controller and FTC | Check connection cable for damage or loose connections. |
| E6 - EF | Communication failure between FTC and C.B. | Check connection cable for damage or loose connections.<br>Refer to service handbook. |
| E9 | C.B. receives no signal from FTC. | Check connection cable for damage or loose connections. Refer to service handbook. |
| U*, F* | Refrigerant or brine circuit failure | Refer to Error Codes (C.B.) or service handbook. |

**Note: To cancel error codes please switch system off (Press button F4(RESET) on main remote controller, for 3 seconds).**

## ■ Error Codes (C.B.)

| Code | Error | Cause | Action |
|---|---|---|---|
| None | — | ① No voltage is supplied to terminal block (TB1) of heat pump unit.<br>a) Power supply breaker is turned off.<br>b) Contact failure or disconnection of power supply terminal<br>c) Open phase (L or N phase)<br>② Electric power is not charged to power supply terminal of power circuit board.<br>a) Contact failure of power supply terminal<br>b) Open phase on the power circuit board<br>③ Electric power is not supplied to C.B.<br>a) Disconnection of connector (CNDC)<br>④ Disconnection of reactor (ACL)<br>⑤ Disconnection of noise filter circuit board or parts failure in noise filter circuit board<br>⑥ Defective power circuit board<br>⑦ Defective C.B.<br>⑧ Brine pump manual operation<br>⑨ Disconnection of wire between UNIT SIDE and MODULE SIDE. | ① Check following items.<br>a) Power supply breaker<br>b) Connection of power supply terminal block (TB1)<br>c) Connection of power supply terminal block (TB1)<br>② Check following items.<br>a) Connection of power supply terminal block (TB1)<br>b) Connection of terminal on power circuit board<br>Check connection of the connector LI or NI.<br>③ Check connection of the connector (CNDC) on the C.B.<br>Check connection of the connector, CNDC on the noise filter.<br>④ Check connection of reactor. (ACL)<br>⑤ a) Check connection of noise filter circuit board.<br>b) Replace noise filter circuit board.<br>⑥ Replace power circuit board.<br>⑦ Replace C.B. (When items above are checked but the units cannot be repaired).<br>⑧ Check DIP SW6-3 and turn it OFF.<br>⑨ Refer to 'How to remove the module'. Check connection of the wire between UNIT SIDE and MODULE SIDE. |
| F5 (5201) | **63H connector open**<br>Abnormal if 63H connector circuit is open for 3 minutes continuously after power supply.<br><br>63H: High pressure switch | ① Disconnection or contact failure of 63H connector on C.B.<br>② Disconnection or contact failure of 63H<br>③ 63H is working due to defective parts.<br>④ Defective C.B. | ① Check connection of 63H connector on C.B.<br>② Check the 63H side of connecting wire.<br>③ Check continuity by tester.<br>Replace the parts if the parts are defective.<br>④ Replace C.B. |
| U1 (1302) | **High pressure (High pressure switch 63H operated)**<br>Abnormal if high pressure switch 63H operated (4.15 MPa) during compressor operation.<br><br>63H: High pressure switch | ① Clogged or broken pipe<br>② Locked brine pump<br>③ Malfunction of brine pump<br>④ Short cycle of refrigerant or brine circuit<br>⑤ Dirt of brine circuit heat exchanger<br>⑥ Decreased brine flow rate<br>⑦ Disconnection or contact failure of connector (63H) on C.B.<br>⑧ Disconnection or contact failure of 63H connection<br>⑨ Defective C.B.<br>⑩ Defective action of linear expansion valve<br>⑪ Malfunction of brine pump driving circuit | ① Check piping and repair defect.<br>②-⑤ Check heat pump unit and repair defect.<br>⑥ Check the brine flow rate.<br>⑦-⑨ Turn the power off and check F5 is displayed when the power is turned again.<br>⑩ Check linear expansion valve.<br>⑪ Replace C.B. |

| Code | Error | Cause | Action |
|---|---|---|---|
| U2 (1102) | **High discharge temperature**<br>(1) Abnormal if TH4 exceeds 125°C or 110°C continuously for 5 minutes.<br>(2) Abnormal if discharge superheat (Heating: TH4−T63HS) exceeds 70°C continuously for 10 minutes.<br>TH4: Thermistor <Discharge><br><br>**High comp. surface temperature**<br>Abnormal if TH33 exceeds 125°C. In the case of high comp. surface temperature error, compressor does not restart unless the thermistor (TH33) becomes less than 95°C.<br>TH33: Thermistor <Comp. surface> | ① Overheated compressor operation caused by shortage of refrigerant<br>② Defective thermistor<br>③ Defective C.B.<br>④ Defective action of linear expansion valve<br>⑤ Clogging with foreign objects in refrigerant circuit<br>Note:<br>Clogging occur in the parts which become below freezing point when water enters in refrigerant circuit.<br>⑥ In the case of the unit does not restart:<br>Detection temp. of thermistor (TH33) ≥ 95°C | ① Check intake superheat.<br>Check leakage of refrigerant.<br>Charge additional refrigerant.<br>②③ Turn the power off and check if U3 is displayed when the power is turned on again.<br>When U3 is displayed, refer to 'Judgment and action' for U3.<br>④ Check linear expansion valve.<br>⑤ After recovering refrigerant, remove water from entire refrigerant circuit under vacuum more than 1 hour. |
| U3 (5104) | **Open/short circuit of heat pump unit temperature thermistor (TH4, TH33)**<br>Abnormal if open (3°C or less) or short (217°C or more) is detected during compressor operation.<br>(Detection is inoperative for 10 minutes of compressor starting process and for 10 minutes after and during defrosting.)<br>TH4: Thermistor <Discharge><br>TH33: Thermistor <Comp. surface> | ① Disconnection or contact failure of connectors (TH4, TH33) on the C.B.<br>② Defective thermistor<br>③ Defective C.B. | ① Check connection of connector (TH4, TH33) on the C.B.<br>Check breaking of the lead wire for TH4, TH33.<br>② Check resistance value of TH4, TH33 or temperature by microprocessor.<br>③ Replace C.B. |
| U4 (TH3: 5105) (TH7: 5106) (TH8: 5110) (TH32: 5132) (TH34: 5134) | **Open/short of heat pump unit thermistors (TH3, TH32, TH34, TH7 and TH8)**<br>Abnormal if open or short is detected during compressor operation.<br>Open detection of TH3, TH32 and TH34 is inoperative for 10 seconds to 10 minutes after compressor starting.<br>Note:<br>Check which unit has abnormality in its thermistor by switching the mode of SW2. (PAC-SK52ST) | ① Disconnection or contact failure of connectors<br>C.B.: TH3, TH32, TH34, TH7<br>Power board: CN6<br>② Defective thermistor<br>③ Defective C.B. | ① Check connection of connector (TH3, TH32, TH34 TH7) on the C.B.<br>Check connection of connector (CN6) on the power board. Check breaking of the lead wire for TH3, TH32, TH34, TH7, TH8.<br>② Check resistance value of TH3, TH32, TH34,TH7,TH8 or check temperature by microprocessor.<br>③ Replace C.B.<br>Note:<br>Emergency operation is available in case of abnormalities of TH3 and TH7. |
| U5 (4230) | **Temperature of heat sink**<br>Abnormal if TH8 detects temperature indicated 95°C.<br><br>TH8: Thermistor <Heat sink> | ① Rise of ambient temperature<br>② Defective thermistor<br>③ Defective input circuit of power circuit board<br>④ Failure of brine pump drive circuit | ① Check if there is something which causes temperature rise around unit. (Upper limit of ambient temperature is 35°C.)<br>Turn off power, and on again to check if U5 is displayed within 30 minutes.<br>If U4 is displayed instead of U5, follow the action to be taken for U4.<br>② Check resistance value of TH8 or temperature by microprocessor.<br>③ Replace power circuit board.<br>④ Replace C.B. |
| U6 (4250) | **Power module**<br>Check abnormality by driving power module in case overcurrent is detected.<br>(UF or UP error condition) | ① Decrease of power supply voltage<br>② Looseness, disconnection or converse of compressor wiring connection<br>③ Defective compressor<br>④ Defective C.B. | ① Check facility of power supply.<br>② Correct the wiring (U•V•W phase) to compressor.<br>③ Check compressor<br>④ Replace C.B. |

| Code | Error | Cause | Action |
|---|---|---|---|
| U7 (1520) | **Too low superheat due to low discharge temperature**<br>Abnormal if discharge superheat is continuously detected less than or equal to −15°C for 3 minutes even though linear expansion valve has minimum open pulse after compressor starts operating for 10 minutes. | ① Disconnection or loose connection of discharge temperature thermistor (TH4)<br>② Defective holder of discharge temperature thermistor<br>③ Disconnection or loose connection of linear expansion valve's coil<br>④ Disconnection or loose connection of linear expansion valve's connector<br>⑤ Defective linear expansion valve | ①② Check the installation conditions of discharge temperature thermistor (TH4).<br>③ Check the coil of linear expansion valve.<br>④ Check the connection or contact of LEV-A on C.B.<br>⑤ Check linear expansion valve. |
| U8 (4400) | **Brine pump**<br>Abnormal if rotational frequency of the brine pump is not detected during DC brine pump operation.<br>Brine pump rotational frequency is abnormal if 500 rpm or below or 5000 rpm or more detected continuously for 1 minute. | ① Failure in the operation of the DC brine pump<br>② Failure in the C.B. | ① Check or replace the DC brine pump.<br>② Check the voltage of the C.B. during operation.<br>③ Replace the C.B.<br>(When the failure is still indicated even after performing the action ① above.) |
| U9 (4220) | **Abnormal voltage error**<br>See service handbook. | See service handbook. | See service handbook. |
| UE (1302) | **Abnormal pressure of 63HS**<br>Abnormal if 63HS detects 0.1 MPa or less.<br>Detection is inoperative for 3 minutes after compressor starting and 3 minutes after and during defrosting.<br>63HS: High pressure sensor | ① Disconnection or contact failure of connector (63HS) on the C.B.<br>② Defective pressure sensor<br>③ Defective C.B. | ① Check connection of connector (63HS) on the C.B.<br>Check breaking of the lead wire for 63HS.<br>② Check pressure by microprocessor. (Pressure sensor/ 63HS)<br>③ Replace C.B. |
| UL (1300) | **Low pressure**<br>Abnormal if TH33-TH4 exceeds 20°C and TH33 exceeds 80°C during compressor operation. | ① Defective linear expansion valve.<br>② Defective C.B. | ① Check linear expansion valve.<br>② Replace C.B. |
| UF (4100) | **Compressor overcurrent interruption (When compressor locked)**<br>Abnormal if overcurrent of DC bus or compressor is detected within 30 seconds after compressor starts operating. | ① Decrease of power supply voltage<br>② Looseness, disconnection or converse of compressor wiring connection<br>③ Defective compressor<br>④ Defective power board | ① Check facility of power supply.<br>② Correct the wiring (U•V•W phase) to compressor.<br>③ Check compressor.<br>④ Replace power circuit board. |
| UH (5300) | **Current sensor error or input current error**<br>• Abnormal if current sensor detects –1.0A to 1.0A during compressor operation. (This error is ignored in case of test run mode.)<br>• Abnormal if 40A of input current is detected or 37A or more of input current is detected for 10 seconds continuously. | ① Disconnection of compressor wiring<br>② Defective circuit of current sensor on power circuit board<br>③ Decrease of power supply voltage<br>④ Leakage or shortage of refrigerant | ① Correct the wiring (U•V•W phase) to compressor.<br>② Replace power circuit board.<br>③ Check the facility of power supply.<br>④ Check leakage of refrigerant. |
| UA (2511) | **Low brine flow rate (flow switch operated)**<br>Abnormal if flow switch is operated (under 5.5L/min) during compressor operation. | ① Valve of brine circuit is closed during operation.<br>② Disconnection or loose connection of connector (63L) on C.B.<br>③ Disconnection or loose connection of 63L<br>④ Defective C.B.<br>⑤ Leakage or shortage of brine | ① Check valve.<br>②-④ Turn the power off and on again to check if F3 is displayed on restarting.<br>If F3 is displayed, follow the F3 processingdirection.<br>⑤ Correct to proper amount of refrigerant. |
| UP (4210) | **Compressor overcurrent interruption**<br>Abnormal if overcurrent DC bus or compressor is detected after compressor starts operating for 30 seconds. | See service handbook. | See service handbook. |

## ■ Annual Maintenance

It is essential that the heat pump is serviced at least once a year by a qualified individual. Any required parts should be purchased from Mitsubishi Electric. NEVER bypass safety devices or operate the unit without them being fully operational. For more details, refer to service handbook.

**Note:**
**Within the first couple of months of installation, remove and clean the heat pump unit's strainer plus any additional filter items that are fitted external to the heat pump unit. This is especially important when installing on an old/existing pipe work system.**

In addition to annual servicing it is necessary to replace or inspect some parts after a certain period of system operation. Please see tables below for detailed instructions. Replacement and inspection of parts should always be done by a competent person with relevant training and qualifications.

**Parts which require regular replacement**

| Parts | Replace every | Possible failures |
|---|---|---|
| Pressure relief valve (PRV) Manometer | 6 years | Water leakage |

**Parts which require regular inspection**

| Parts | Check every | Possible failures |
|---|---|---|
| Pressure relief valve (3 bar) | 1 year (turning the knob manually) | PRV would be fixed and expansion vessel would burst |
| Immersion heater (Optional part) | 2 years | Earth leakage causing circuit breaker to activate (Heater is always OFF) |
| Water circulation pump (Primary circuit) | 20,000 hrs (3 years) | Water circulation pump failure |
| Brine circulation pump | 30,000 hrs (4.5 years) | Brine circulation pump failure |

**Parts which must NOT be reused when servicing**

* O-ring
* Gasket

**Note:**

- **Always replace the gasket for pump with a new one at each regular maintenance (every 20,000 hours of use or every 3 years).**

**<Draining the heat pump unit and its primary heating circuit (local)>**
**WARNING: DRAINED WATER MAY BE VERY HOT**

1. Before attempting to drain the heat pump unit isolate from the electrical supply to prevent the immersion and booster heaters burning out.
2. Isolate cold water feed to DHW tank.
3. Open a hot water tap to start draining without a vacuum.
4. Attach a hose to the DHW tank drain cocks. The hose should be able to withstand heat as the draining water could be very hot. The hose should drain to a place lower than the DHW tank bottom to encourage siphoning.
5. When the DHW tank is drained close drain cock and hot tap.
6. Attach hose to water circuit drain cocks (No. 7 on Figure 6.5.1). The hose should be able to withstand heat as the draining water could be very hot. The hose should drain to a place lower than the booster heater drain cock to encourage siphoning. Open the pump valves and the strainer valves.
7. Water remains in the strainer still after the heat pump unit was drained.

Drain the strainer by removing the strainer cover.

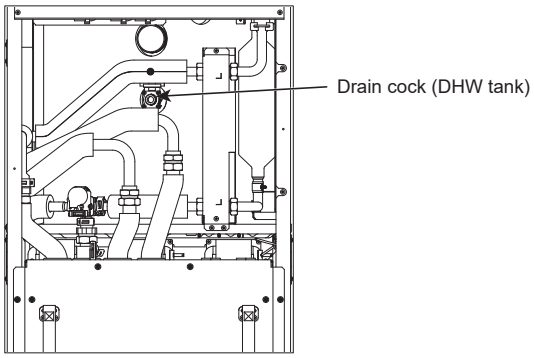


<Figure 6.8.1>

## ■ Engineers Forms

Should settings be changed from default, please enter and record new setting in 'Field Setting' column. This will ease resetting in the future should the system use change or the circuit board need to be replaced.

**Commissioning/Field settings record sheet**

| Main remote controller screen | | | | Parameters | Default setting | Field setting | Notes |
|---|---|---|---|---|---|---|---|
| Main | | | Zone1 heating room temp. | 10°C - 30°C | 20°C | | |
| | | | Zone2 heating room temp. *8 | 10°C - 30°C | 20°C | | |
| | | | Zone1 heating flow temp. | 20°C - 60°C | 45°C | | |
| | | | Zone2 heating flow temp. *1 | 20°C - 60°C | 35°C | | |
| | | | Zone1 heating compensation curve | −9°C - + 9°C | 0°C | | |
| | | | Zone2 heating compensation curve *1 | −9°C - + 9°C | 0°C | | |
| | | | Holiday mode | Active/Non active/Set time | — | | |
| Option | | | Forced DHW operation | On/Off | — | | |
| | | | DHW | On/Off/Timer | On | | |
| | | | Heating | On/Off/Timer | On | | |
| | | | Energy monitor | Consumed electrical energy/Delivered energy | — | | |
| Setting | DHW | | Operation mode | Normal/Eco | Eco | | |
| | | | DHW max. temp. | 40°C - 60°C | 50°C | | |
| | | | DHW ma. temp. drop | 5°C - 30°C | 10°C | | |
| | | | DHW max. operation time | 30 - 120 min | 60 min | | |
| | | | DHW mode restriction | 30 - 120 min | 30 min | | |
| | | | DHW recharge | Standard/Large | Standard | | |
| | Legionella prevention | | Active | Yes/No | Yes | | |
| | | | Hot water temp. | 60°C - 70°C | 65°C | | |
| | | | Frequency | 1 - 30 days | 15 days | | |
| | | | Start time | 00.00 - 23.00 | 03.00 | | |
| | | | Max. operation time | 1 - 5 hours | 3 hours | | |
| | | | Duration of maximum temp. | 1 - 120 min | 30 min | | |
| | Heating | | Zone1 operation mode | Heating room temp./ Heating flow temp./ Heating compensation curve | Room temp. | | |
| | | | Zone2 operation mode *1 | Heating room temp./ Heating flow temp./ Heating compensation curve | Compensation curve | | |
| | Compensation curve | Hi flow temp. set point | Zone1 outdoor ambient temp. | −30°C - +33°C | −15°C | | |
| | | | Zone1 flow temp. | 20°C - 60°C | 50°C | | |
| | | | Zone2 outdoor ambient temp. *1 | −30°C - +33°C | −15°C | | |
| | | | Zone2 flow temp. *1 | 20°C - 60°C | 40°C | | |
| | | Lo flow temp. set point | Zone1 outdoor ambient temp. | −28°C - +35°C | 35°C | | |
| | | | Zone1 flow temp. | 20°C - 60°C | 25°C | | |
| | | | Zone2 outdoor ambient temp. *1 | −28°C - +35°C | 35°C | | |
| | | | Zone2 flow temp.*1 | 20°C - 60°C | 25°C | | |
| | | Adjust | Zone1 outdoor ambient temp. | −29°C - +34°C | — | | |
| | | | Zone1 flow temp. | 20°C - 60°C | — | | |
| | | | Zone2 outdoor ambient temp. *1 | −29°C - +34°C | — | | |
| | | | Zone2 flow temp. *1 | 20°C - 60°C | — | | |
| | Holiday | | DHW | Active/Non active | Non active | | |
| | | | Heating | Active/Non active | Active | | |
| | | | Zone1 heating room temp. | 10°C - 30°C | 15°C | | |
| | | | Zone2 heating room temp. *8 | 10°C - 30°C | 15°C | | |
| | | | Zone1 heating flow temp. | 20°C - 60°C | 35°C | | |
| | | | Zone2 heating flow temp. *1 | 20°C - 60°C | 25°C | | |
| | Initial settings | | Language | EN/FR/DE/SV/ES/IT/DA/NL/FI/NO/PT/BG/PL/CZ/RU/TR/SL | EN | | |
| | | | °C/°F | °C/°F | °C | | |
| | | | Summer time | On/Off | Off | | |
| | | | Temp. display | Room/DHW tank/Room&DHW tank / Off | Off | | |
| | | | Time display | hh:mm/hh:mm AM/AM hh:mm | hh:mm | | |
| | | | Room sensor settings for Zone1 | TH1/Main RC/Room RC1-8/"Time/Zone" | TH1 | | |
| | | | Room sensor settings for Zone2 *1 | TH1/Main RC/Room RC1-8/"Time/Zone" | TH1 | | |
| | | | Room RC zone select *1 | Zone1/Zone2 | Zone1 | | |

## ■ Engineers Forms

**Commissioning/Field settings record sheet (continued from the previous page)**

| Main remote controller screen | | | | | | | Parameters | | Default setting | Field setting | Notes |
|---|---|---|---|---|---|---|---|---|---|---|---|
| Setting | Service menu | Thermistor adjustment | THW1 | | | | −10°C - +10°C | | 0°C | | |
| | | | THW2 | | | | −10°C - +10°C | | 0°C | | |
| | | | THW5A | | | | −10°C - +10°C | | 0°C | | |
| | | | THW5B | | | | −10°C - +10°C | | 0°C | | |
| | | | THW6 | | | | −10°C - +10°C | | 0°C | | |
| | | | THW7 | | | | −10°C - +10°C | | 0°C | | |
| | | | THW8 | | | | −10°C - +10°C | | 0°C | | |
| | | | THW9 | | | | −10°C - +10°C | | 0°C | | |
| | | | THW10 | | | | −10°C - +10°C | | 0°C | | |
| | | | THWB1 | | | | −10°C - +10°C | | 0°C | | |
| | | Auxiliary settings | Economy settings for pump. | | | | On/Off *2 | | On | | |
| | | | | | | | Delay (3 - 60 min) | | 10 min | | |
| | | | Electric heater (Heating) | | | | Space heating: On (used)/Off (not used) | | On | | |
| | | | | | | | Electric heater delay timer (5 - 180 min) | | 30 min | | |
| | | | Electric heater (DHW) | | | | Booster heater | DHW: On (used)/Off (not used) | On | | |
| | | | | | | | Immersion heater | DHW: On (used)/Off (not used) | On | | |
| | | | | | | | Electric heater delay timer (15 - 30 min) | | 15 min | | |
| | | | Mixing valve control | | | | Running (10 - 240 sec) | | 120 sec | | |
| | | | | | | | Interval (1 - 30 min) | | 2 min | | |
| | | | Flow sensor *10 | | | | Minimum (0 - 100L/min) | | 5 L/min | | |
| | | | | | | | Maximum (0 - 100L/min) | | 100 L/min | | |
| | | | Analog output | | | | Interval (1 - 30 min) | | 5 min | | |
| | | | | | | | Priority (Normal/High) | | Normal | | |
| | | Pump speed | DHW | | | | Pump speed (1 - 5) | | 5 | | |
| | | | Heating | | | | Pump speed (1 - 5) | | 5 | | |
| | | Heat source setting | | | | | Standard/Heater/Boiler/Hybrid *3 | | Standard | | |
| | | Heat pump settings | Heat pump flow rate range | | | | Minimum (0 - 100L/min) | | 5 L/min | | |
| | | | | | | | Maximum (0 - 100L/min) | | 100 L/min | | |
| | | | Quiet mode | | | | Day (Mon - Sun) | | — | | |
| | | | | | | | Time | | 0:00-23:45 | | |
| | | | | | | | Quiet level (Normal/Level1/Level2) | | Normal | | |
| | | Operation settings | Heating operation | Flow temp. range *6 | | | Minimum.temp. (20 - 45°C) | | 30°C | | |
| | | | | | | | Maximum.temp. (35 - 60°C) | | 50°C | | |
| | | | | Room temp. control *9 | | | Mode (Normal/Fast) | | Normal | | |
| | | | | | | | Interval(10 - 60min) | | 10min | | |
| | | | | Heat pump thermo diff. adjust | | | On/Off *2 | | On | | |
| | | | | | | | Lower limit (−9 - −1°C) | | -5°C | | |
| | | | | | | | Upper limit (+3 - +5°C) | | 5°C | | |
| | | | Freeze stat function *7 | | | | Outdoor ambient temp. (3 - 20°C) / ** | | 5°C | | |
| | | | Simultaneous operation (DHW/Heating) | | | | On/Off *2 | | Off | | |
| | | | | | | | Outdoor ambient temp. (−30 - +10°C) | | −15°C | | |
| | | | Cold weather function | | | | On/Off *2 | | Off | | |
| | | | | | | | Outdoor ambient temp. (−30 - −10°C) | | −15°C | | |
| | | | Boiler operation | | | | Hybrid settings | Outdoor ambient temp. (−30 - +10°C) | −15°C | | |
| | | | | | | | | Priority mode (Ambient/Cost/$CO_2$) | Ambient | | |
| | | | | | | | Intelligent settings | Energy price *5 | Electricity (0.001 - 999 */kWh) | 0.5 */kWh | |
| | | | | | | | | | Boiler (0.001 - 999 */kWh) | 0.5 */kWh | |
| | | | | | | | | CO2 emission | Electricity (0.001 - 999 kg -CO2/kWh) | 0.5 kg -CO2/kWh | |
| | | | | | | | | | Boiler (0.001 - 999 kg -CO2/kWh) | 0.5 kg -CO2/kWh | |
| | | | | | | | | Heat source | Heat pump capacity (1 - 40 kW) | 11.2 kW | |
| | | | | | | | | | Boiler efficiency (25 - 150%) | 80% | |
| | | | | | | | | | Booster heater 1 capacity (0 - 30 kW) | 2 kW | |
| | | | | | | | | | Booster heater 2 capacity (0 - 30 kW) | 4 kW | |

## ■ Engineers Forms

**Commissioning/Field settings record sheet (continued from the previous page)**

| Main remote controller screen | | | | | | Parameters | Default setting | Field setting | Notes |
|---|---|---|---|---|---|---|---|---|---|
| Setting | Service menu | Operation settings | Smart grid ready | DHW | On/Off | | Off | | |
| | | | | | Target temp (+1 - +20°C) / -- (Non active) | | -- | | |
| | | | | Heating | On/Off | | Off | | |
| | | | | | Target temp. | Switch-on recommendation (20 - 60°C) | 50°C | | |
| | | | | | | Switch-on command (20 - 60°C) | 55°C | | |
| | | | | Pump cycles | Heating (On/Off) | | On | | |
| | | | | | Interval (10-120 min) | | 10 min | | |
| | | | Floor dry up function | | On/Off *2 | | Off | | |
| | | | | | Target temp. | Start&Finish (20 - 60°C) | 30°C | | |
| | | | | | | Max. temp. (20 - 60°C) | 45°C | | |
| | | | | | | Max. temp. period (1 - 20 days) | 5 days | | |
| | | | | | Flow temp. (Increase) | Temp. increase step (+1 - +10°C) | +5°C | | |
| | | | | | | Increase interval (1 - 7 days) | 2 days | | |
| | | | | | Flow temp. (Decrease) | Temp. decrease step (−1 - −10°C) | −5°C | | |
| | | | | | | Decrease interval (1 - 7 days) | 2 days | | |
| | | | Summer mode | | On/Off | | Off | | |
| | | | | | Outdoor ambient temp. | Heating ON (4 - 19°C) | 10°C | | |
| | | | | | | Heating OFF (5 - 20°C) | 15°C | | |
| | | | | | Judgement time | Heating ON (1 - 48 hours) | 6 hours | | |
| | | | | | | Heating OFF (1 - 48 hours) | 6 hours | | |
| | | | | | Forced heating ON (−30 - 10°C) | | 5 °C | | |
| | | | Water flow control | | On/Off | | Off | | |
| | | Energy monitor settings | | Electric heater capacity | Booster heater 1 capacity | 0 - 30kW | 2kW | | |
| | | | | | Booster heater 2 capacity | 0 - 30kW | 4kW | | |
| | | | | | Immersion heater capacity | 0 - 30kW | 0kW | | |
| | | | | | Analog output | 0 - 30kW | 0kW | | |
| | | | | Delivered energy adjustment | | −50 - +50% | 0% | | |
| | | | | Water pump input | Pump 1 | 0 - 200W or ***(factory fitted pump) | *** | | |
| | | | | | Pump 2 | 0 - 200W | 0W | | |
| | | | | | Pump 3 | 0 - 200W | 0W | | |
| | | | | | Pump 4 | 0 - 200W | 72W | | |
| | | | | Electric energy meter *4 | | 0.1/1/10/100/1000 pulse/kWh | 1000 pulse/kWh | | |
| | | | | Heat meter *4 | | 0.1/1/10/100/1000 pulse/kWh | 1000 pulse/kWh | | |
| | | External input settings | | Demand control (IN4) | | Heat source OFF/Boiler operation | Boiler operation | | |
| | | | | Outdoor thermostat (IN5) | | Heater operation/Boiler operation | Boiler operation | | |
| | | Thermo ON output | | | | Zone1/Zone2/Zone1&2 | Zone1&2 | | |

*1 The settings related to Zone2 can be switched only when 2 zone temperature control is enabled (when DIP SW2-6 and SW 2-7 (FTC) are ON).
*2 On: the function is active; Off: the function is inactive.
*3 When DIP SW1-1 (FTC) is set to OFF “WITHOUT Boiler” or SW2-6 (FTC) is set to OFF “WITHOUT Mixing tank”, neither Boiler nor Hybrid can be selected.
*4 The default setting is 1 pulse/kWh depending on the connected indoor unit.
*5 “*” of “*/kWh” represents currency unit (e.g. € or £ or the like)
*6 Valid only when operating in Heating room temperature.
*7 If asterisk (**) is chosen freeze stat function is deactivated. (i.e. primary water freeze risk)
*8 The settings related to Zone2 can be switched only when 2-zone temperature control or 2-Zone valve ON/OFF control is active.
*9 When DIP SW5-2 (FTC) is set to OFF, the function is active.
*10 Do not change the setting since it is set according to the specification of flow sensor attached to the heat pump unit.

## 6.9. Supplementary information

### ■ Back-up operation of boiler

Heating operation is backed up by boiler.
For more details, refer to the installation manual of PAC-TH012HT-E.

**<Installation & System set up>**

1. Set DIP-SW 1-1 (FTC) to ON "With boiler" and SW2-6 (FTC) to ON “With Mixing tank”.
2. Install the thermistors THWB1*1 on the boiler circuit.
3. Connect the output wire (OUT10: Boiler operation) to the input (room thermostat input) on the boiler. *2
4. Install one of the following room temperature thermostats. *3

- Wireless remote controller (option)
- Room temp. thermostat (local supply)
- Main remote controller (remote position)

*1 The boiler temperature thermistor is an optional part.
*2 OUT10 has no voltage across it.
*3 Boiler heating is controlled on/off by the Room temp. thermostat.

**<Main remote controller settings>**

1. Go to Service menu > Heat source setting and choose “Boiler” or “Hybrid”. *4
2. Go to Service menu > Operation settings > Boiler settings to make detailed settings for “Hybrid” above .

*4 The “Hybrid” automatically switches heat sources between Heat pump (and Electric heater) and boiler.

### ■ Product fiche of temperature control

(a) Supplier's name: MITSUBISHI ELECTRIC CORPORATION
(b) Supplier's model identifier: PAR-WT50R-E and PAR-WR51R-E
(c) The class of the temperature control: Ⅵ
(d) The contribution of the temperature control to seasonal space heating energy efficiency: 4%

## 7.1. Outlines and dimensions

### 7.1.1 Technical Drawings

<Unit: mm>

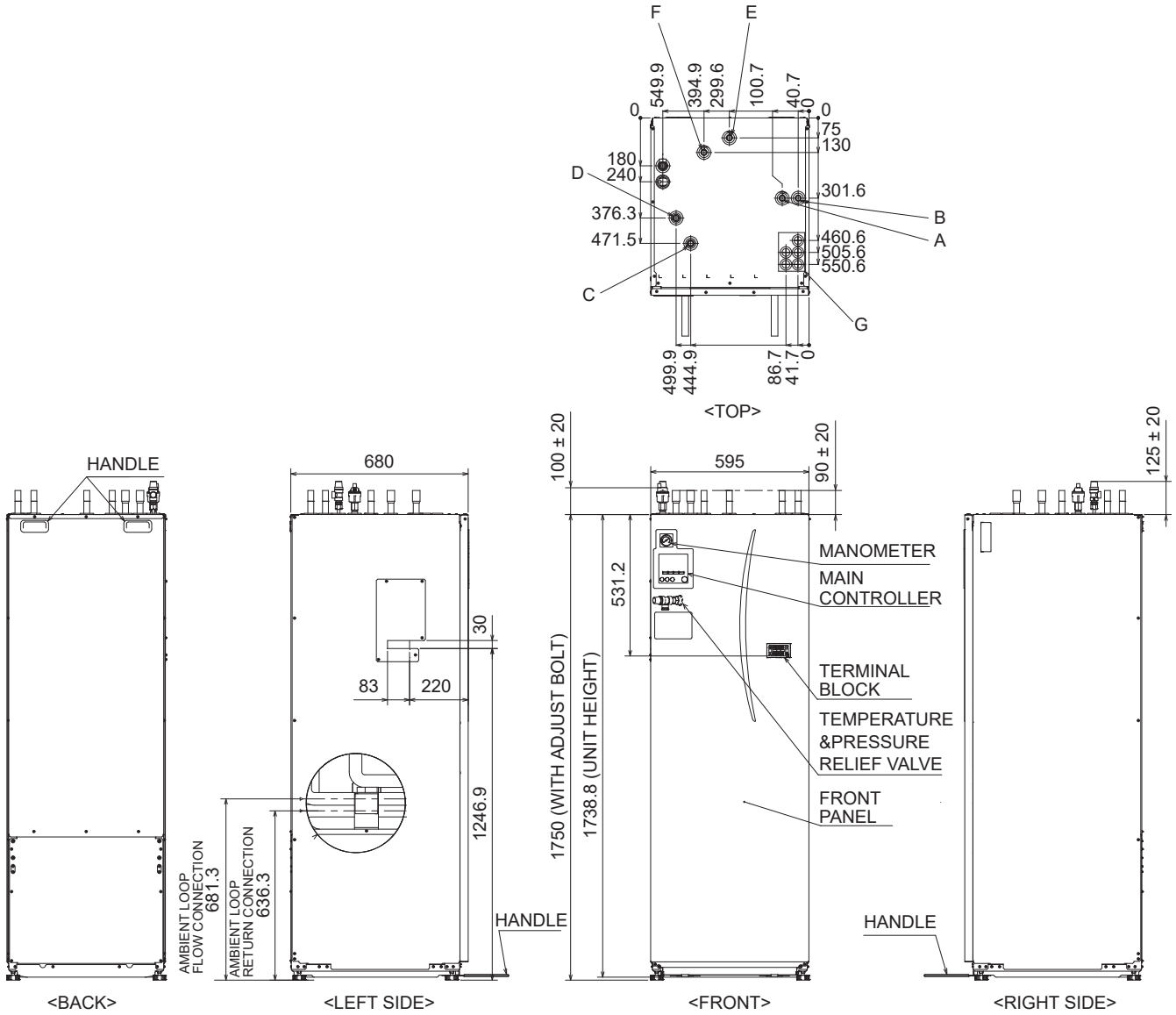


| Letter | Pipe description | Connection size/type |
|---|---|---|
| A | DHW outlet connection | 22 mm/Compression |
| B | Cold water inlet connection | 22 mm/Compression |
| C | Space heating return connection | 28 mm/Compression |
| D | Space heating flow connection | 28 mm/Compression |
| E | Ambient loop return connection | 22 mm/Compression |
| F | Ambient loop flow connection | 22 mm/Compression |
| G | Electrical cable inlets<br>③<br>①④<br>②⑤ | For inlets ① and ②, run low-voltage wires including external input wires and thermistor wires. For inlets ③, ④ and ⑤, run high-voltage wires including power cable, and external output wires.<br>*For a wireless receiver (option) cable and ecodan Wi-Fi interface (option) cable, use inlet ①. |

<Table 7.1.1>

## ■ Service access diagrams

| Service access | |
|---|---|
| Parameter | Dimension (mm) |
| a | 300 |
| b | 150 |
| c (distance behind unit not visible in Figure 7.1.2) | 10 |
| d | 700** |
| e | 150* |

<Table 7.1.2>

* An additional space is required, when brine pipe connecting to the side.
** Including service space for Module removal.

Sufficient space MUST be left for the provision of discharge pipework as detailed in National and Local Building Regulations.

The heat pump unit must be located indoors and in a frost-free environment, for example in a utility room, to minimise heat loss from stored water.

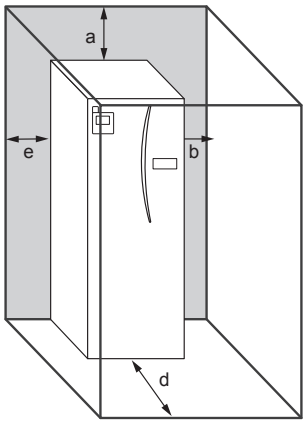


<Figure 7.1.2>
Service access

## 7.2. Wiring diagrams

### ■ EHWT17D-MHEDW

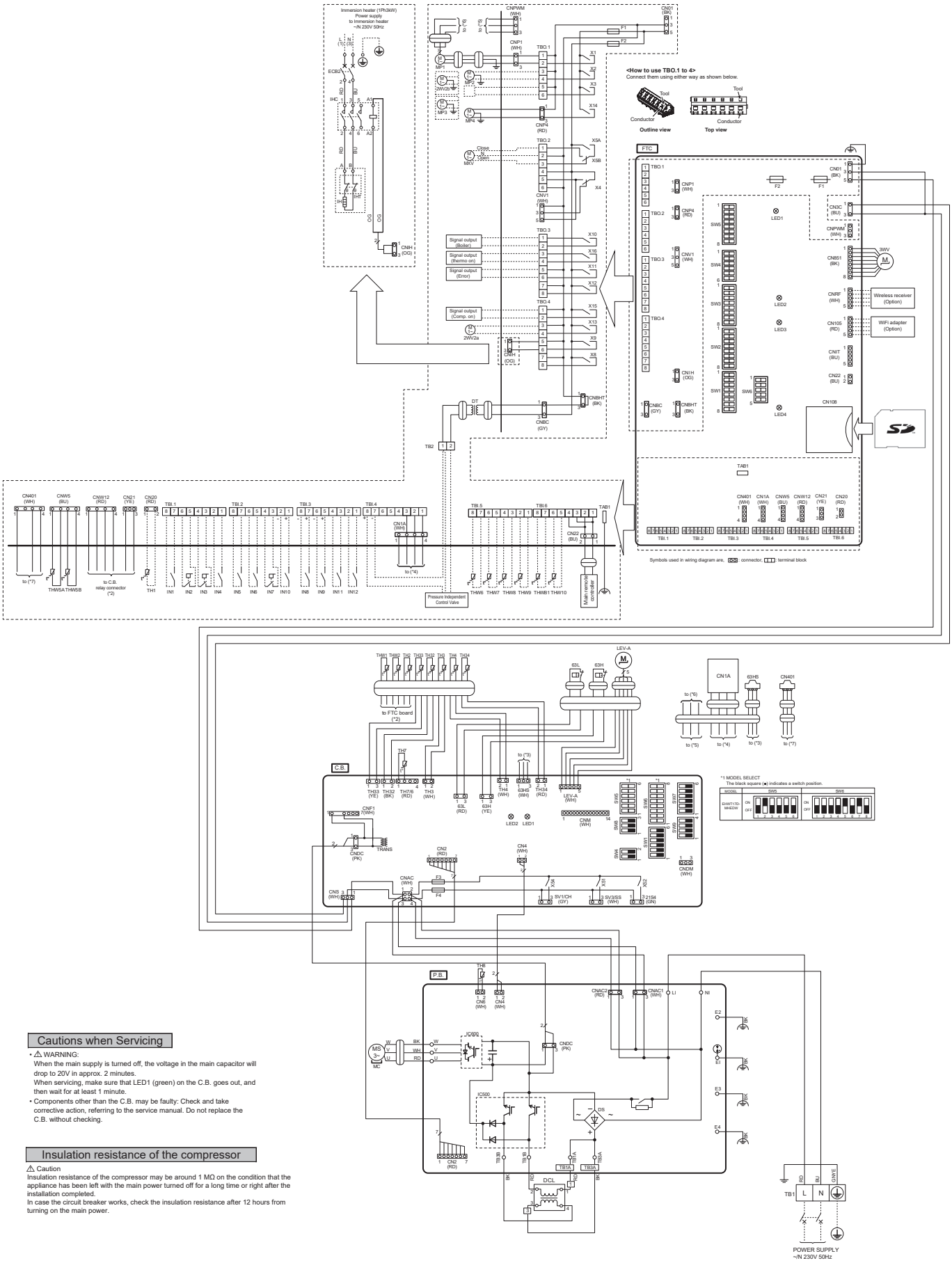


### Cautions when Servicing

- ⚠ WARNING:
  When the main supply is turned off, the voltage in the main capacitor will drop to 20V in approx. 2 minutes.
  When servicing, make sure that LED1 (green) on the C.B. goes out, and then wait for at least 1 minute.
- Components other than the C.B. may be faulty: Check and take corrective action, referring to the service manual. Do not replace the C.B. without checking.

### Insulation resistance of the compressor

⚠ Caution
Insulation resistance of the compressor may be around 1 MΩ on the condition that the appliance has been left with the main power turned off for a long time or right after the installation completed.
In case the circuit breaker works, check the insulation resistance after 12 hours from turning on the main power.

## 7.3. DIP Switch Function(FTC)

Located on the FTC printed circuit board are 6 sets of small white switches known as DIP switches. The DIP switch number is printed on the circuit board next to the relevant switches. The word ON is printed on the circuit board and on the DIP switch block itself. To move the switch you will need to use a pin or the corner of a thin metal ruler or similar.

DIP switch settings are listed below in Table 7.3.1.
Only an authorised installer can change DIP switch setting under one's own responsibility according to the installation condition. Make sure to turn off heat pump unit power supplies before changing the switch settings.

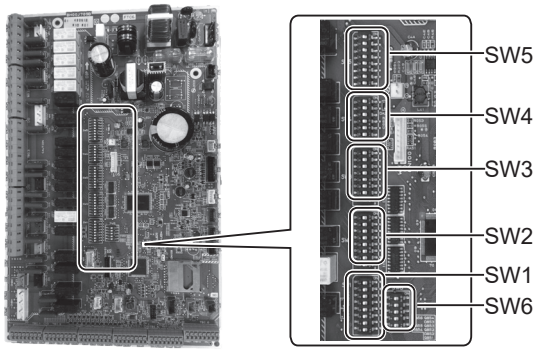


<Figure 7.3.1>

| DIP switch | | Function | OFF | ON | Default settings |
|---|---|---|---|---|---|
| SW1 | SW1-1 | Boiler | WITHOUT Boiler | WITH Boiler | OFF |
| | SW1-2 | Heat pump maximum outlet water temperature | 55ºC | 60ºC | ON |
| | SW1-3 | DHW tank | WITHOUT DHW tank | WITH DHW tank | ON |
| | SW1-4 | Immersion heater | WITHOUT Immersion heater | WITH Immersion heater | ON |
| | SW1-5 | Booster heater | WITHOUT Booster heater | WITH Booster heater | OFF |
| | SW1-6 | Booster heater function | For heating only | For heating and DHW | OFF |
| | SW1-7 | — | — | — | OFF |
| | SW1-8 | Wireless remote controller | WITHOUT Wireless remote controller | WITH Wireless remote controller | OFF |
| SW2 | SW2-1 | Room thermostat1 input (IN1) logic change | Zone1 operation stop at thermostat short | Zone1 operation stop at thermostat open | OFF |
| | SW2-2 | Flow switch1 input (IN2) logic change | Failure detection at short | Failure detection at open | OFF |
| | SW2-3 | Booster heater capacity restriction | Inactive | Active | OFF |
| | SW2-4 | — | — | — | OFF |
| | SW2-5 | Automatic switch to backup heat source operation (When compressor stops by error) | Inactive | Active *1 | OFF |
| | SW2-6 | Mixing tank | WITHOUT Mixing tank | WITH Mixing tank | OFF |
| | SW2-7 | 2-zone temperature control | Inactive | Active *4 | OFF |
| | SW2-8 | — | — | — | ON |
| SW3 | SW3-1 | Room thermostat 2 input (IN6) logic change | Zone2 operation stop at thermostat short | Zone2 operation stop at thermostat open | OFF |
| | SW3-2 | Flow switch 2,3 input (IN3,7) logic change | Failure detection at short | Failure detection at open | OFF |
| | SW3-3 | — | — | — | ON |
| | SW3-4 | Electric energy meter | WITHOUT Electric energy meter | WITH Electric energy meter | OFF |
| | SW3-5 | — | — | — | OFF |
| | SW3-6 | 2-zone valve ON/OFF control | Inactive | Active | OFF |
| | SW3-7 | — | — | — | ON |
| | SW3-8 | Heat meter | WITHOUT Heat meter | WITH Heat meter | OFF |
| SW4 | SW4-1 | — | — | — | OFF |
| | SW4-2 | — | — | — | OFF |
| | SW4-3 | — | — | — | OFF |
| | SW4-4 | Water circuit only operation (during installation work) *2 | Inactive | Active | OFF |
| | SW4-5 | Emergency mode (Heater only operation) | Normal | Emergency mode (Heater only operation) | OFF *3 |
| | SW4-6 | Emergency mode (Boiler operation) | Normal | Emergency mode (Boiler operation) | OFF *3 |
| SW5 | SW5-1 | — | — | — | OFF |
| | SW5-2 | Advanced auto adaptation | Inactive | Active | ON |
| | SW5-3 | Capacity code | — | — | ON |
| | SW5-4 | | — | — | OFF |
| | SW5-5 | | — | — | OFF |
| | SW5-6 | | — | — | ON |
| | SW5-7 | | — | — | OFF |
| | SW5-8 | — | — | — | OFF |
| SW6 | SW6-1 | — | — | — | OFF |
| | SW6-2 | — | — | — | OFF |
| | SW6-3 | Pressure sensor | Inactive | Active | ON |
| | SW6-4 | Analog output signal (0-10V) | Inactive | Active | OFF |
| | SW6-5 | Model select | Air to Water | Water to Water | ON |

<Table 7.3.1>

**Note:** ***1. External output (OUT11) will be available. For safety reasons, this function is not available for certain errors. (In that case, system operation must be stopped and only the water circulation pump keeps running.)**
***2. Space heating and DHW can be operated only in water circuit, like an electric boiler. (Refer to "7.4.5 Water circuit only operation". )**
***3. If emergency mode is no longer required, return the switch to OFF position.**
***4. Active only when SW3-6 is set to OFF.**

## 7.4. Field wiring

### 7.4.1 Electrical Connection

All electrical work should be carried out by a suitably qualified technician. Failure to comply with this could lead to electrocution, fire, and death. It will also invalidate product warranty. All wiring should be according to national wiring regulations.

| Breaker abbreviation | Meaning |
|---|---|
| ECB2 | Earth leakage circuit breaker for immersion heater |
| TB1 | Terminal block 1 |
| TB2 | Terminal block 2 |

Connections should be made to the terminals indicated in the figures.

Immersion heater should be connected independently from one another to dedicated power supplies.

Ⓐ Locally supplied wiring should be inserted through the inlets situated on the top of the heat pump unit. (Refer to <Table 7.1.1>.)

Ⓑ Wiring should be fed down the back right hand side of the control and electrical box.

Ⓒ The wires should be inserted individually through the cable inlets as below.

Ⓓ Connect the power cable for the immersion heater to ECB2.

- Avoid contact between wiring and parts ( ∗ ).
- Make sure that ECB2 is ON.
- When connecting PICV, connect the terminal and PICV

Ⓔ The wires should be fixed with the cable straps as below
- Immersion heater cables should use the cable strap ①, ⑦.
- Output cables should use the cable strap ②, ④, ⑧.
- Input cables, PICV power cables, and PICV output cables should use the cable strap ③, ⑤.
- Power cables should use the cable strap ⑥.

Ⓕ On completion of wiring ensure main remote controller cable is connected to the relay connector.

* Before connecting the main remote controller cable, remove the fastener bundling the cable between the power circuit board and the relay connector.
Caution: Do NOT remove the band bundling the cable between the main remote controller and the relay connector, or the heat pump unit may malfunction due to electrical noise of the power circuit board. (See Figure 7.4.2.)

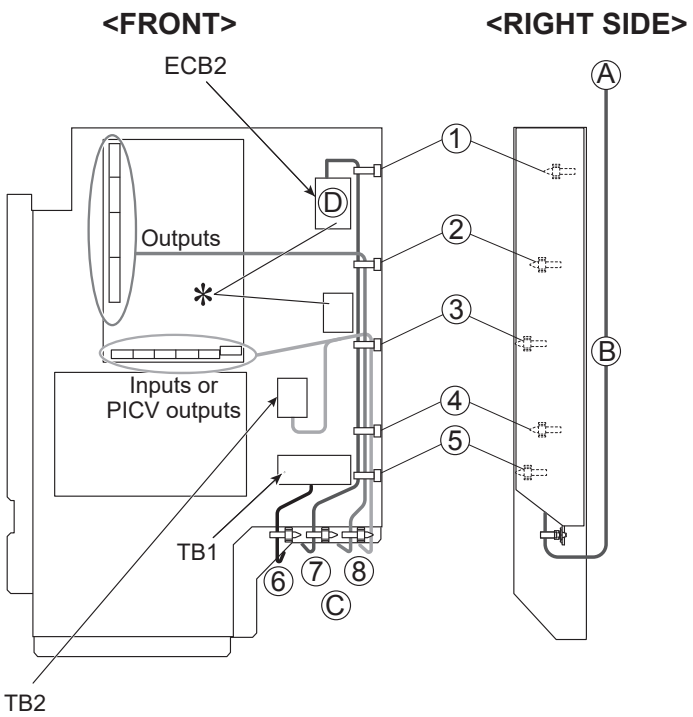


<Figure 7.4.1>

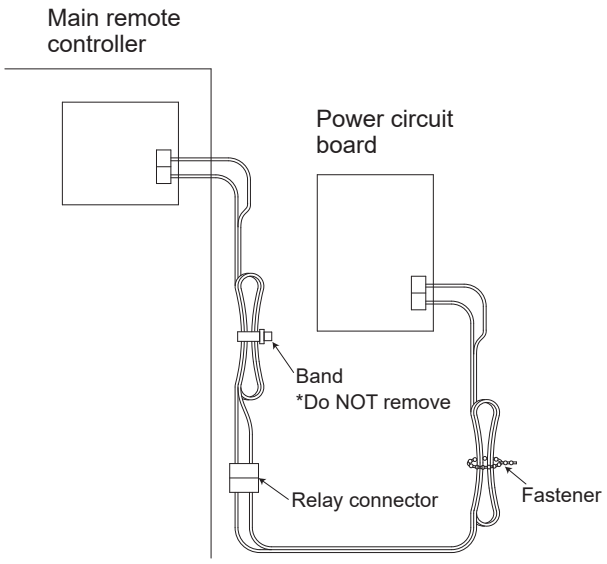


<Figure 7.4.2>

Affix label A that is included with the manuals near each wiring diagram for heat pump units.

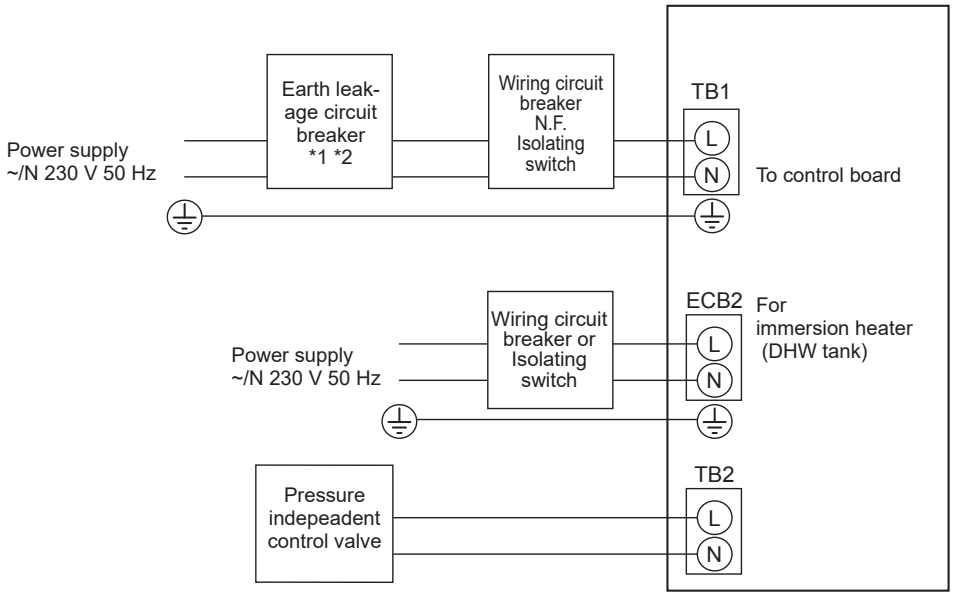


<Figure 7.4.3>
Electrical connections 1 phase

| Description | Power supply | Capacity | Breaker | Wiring *4 |
|---|---|---|---|---|
| Immersion heater (DHW tank) | ~/N 230 V 50 Hz | 3 kW | 16 A *2 | 2.5 mm² |

| | | | |
|---|---|---|---|
| Water to water unit power supply | | | ~/N 230 V 50 Hz |
| Water to water unit circuit breaker capacity | | *2 | 16 A |
| Wiring No. × size (mm²) | Water to water unit power supply, earth | *4 | 3 × Min. 1.5 |
| Circuit rating | Water to water unit L, N | *3 | 230 V AC |

| Description | Power supply | Capacity | Wiring specification |
|---|---|---|---|
| Pressure independent control value (PICV) *5 | ~/N 24 V 50 Hz | 500 mA | Use sheathed vinyl coated cord or cable.<br>Wire type: CV, CVS or equivalent<br>Wire size: Stranded wire 0.13 mm² to 0.52 mm²<br>Solid wire: ø0.4 mm to ø0.8 mm |

*1.If the installed earth leakage circuit breaker does not have an over-current protection function, install a breaker with that function along the same power line.
*2.A breaker with at least 3.0 mm contact separation in each pole shall be provided. Use earth leakage breaker (NV). The breaker shall be provided to ensure disconnection of all active phase conductors of the supply.
*3.The values given in the table above are not always measured against the ground value.
*4.Use wires in conformity with design 60245 IEC 57.
*5.External wiring length to PICV is less than 2 m.

**Note: 1. Wiring size must comply with the applicable local and national codes.**
**2. Install an earth longer than other cables.**
**3. Please keep enough output capacity of power supply for each heater. Insufficient power supply capacity might cause chattering.**
**4. Stranded wire should be processed with insulation-covered bar terminal (DIN46228-4 standard compatible type).**

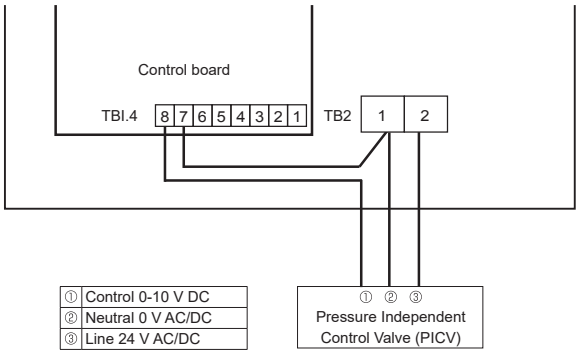


<Figure 7.4.4>

| Breaker abbreviation | Meaning |
|---|---|
| TB2 | Terminal block 2 |

Connections should be made to the terminals indicated in Figure 7.4.4.

If connecting the PICV, attend to the following points.
- External wiring length to PICV is less than 2 m.
- Tighten the TBI 4.7 pin wiring and the PICV (0 V AC/DC) wiring together to TB2.

### 7.4.2 Connecting inputs/outputs

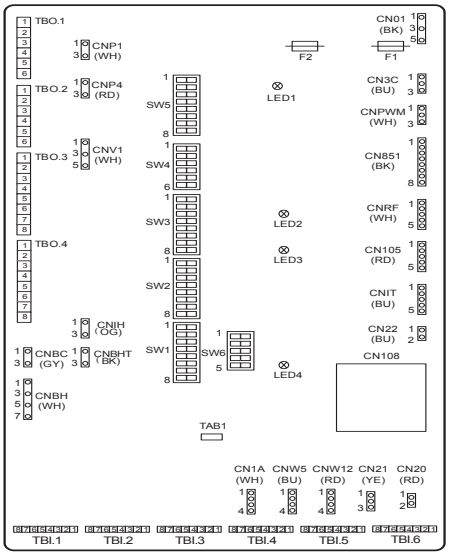


<Figure 7.4.5>

**Wiring specification and local supply parts**

| Item | Name | Model and specifications |
|---|---|---|
| Signal input function | Signal input wire | Use sheathed vinyl coated cord or cable.<br>Max. 30 m<br>Wire type: CV, CVS or equivalent<br>Wire size: Stranded wire 0.13 mm² to 0.52 mm²<br>Solid wire: ø0.4 mm to ø0.8 mm |
| | Switch | Non-voltage “a” contact signals<br>Remote switch: minimum applicable load 12V DC, 1mA |

**Note:**
**Stranded wire should be processed with insulation-covered bar terminal (DIN46228-4 standard compatible type).**

Cylinder unit/ Hydrobox/GSHP/WTW

## ■ Signal inputs

| Name | Terminal block | Connector | Item | OFF (Open) | ON (Short) |
|---|---|---|---|---|---|
| IN1 | TBI.1 7-8 | — | Room thermostat 1 input *1 | Refer to SW2-1 in <7.3.1 DIP Switch Functions>. | |
| IN2 | TBI.1 5-6 | — | Flow switch 1 input | Refer to SW2-2 in <7.3.1 DIP Switch Functions>. | |
| IN3 | TBI.1 3-4 | — | Flow switch 2 input (Zone1) | Refer to SW3-2 in <7.3.1 DIP Switch Functions>. | |
| IN4 | TBI.1 1-2 | — | Demand control input | Normal | Heat source OFF/ Boiler operation *3 |
| IN5 | TBI.2 7-8 | — | Outdoor thermostat input *2 | Standard operation | Heater operation/ Boiler operation *3 |
| IN6 | TBI.2 5-6 | — | Room thermostat 2 input *1 | Refer to SW3-1 in <7.3.1 DIP Switch Functions>. | |
| IN7 | TBI.2 3-4 | — | Flow switch 3 input (Zone2) | Refer to SW3-2 in <7.3.1 DIP Switch Functions>. | |
| IN8 | TBI.3 7-8 | — | Electric energy meter 1 | *4 | |
| IN9 | TBI.3 5-6 | — | Electric energy meter 2 | | |
| IN10 | TBI.2 1-2 | — | Heat meter | | |
| IN11 | TBI.3 3-4 | — | Smart grid ready input | *5 | |
| IN12 | TBI.3 1-2 | — | | | |
| INA1 | TBI.4 1-3 | CN1A | Flow sensor | — | — |

*1. Set the ON/OFF cycle time of the room thermostat for 10 minutes or more; otherwise the compressor may be damaged.
*2. If using outdoor thermostat for controlling operation of heaters, the lifetime of the heaters and related parts may be reduced.
*3. To turn on the boiler operation, use the main remote controller to select “Boiler” in “External input setting“ screen in the service menu.
*4. Connectable electric energy meter and heat meter

- Pulse type: Voltage free contact for 12VDC detection by FTC (TBI.2 1pin ,TBI.3 5 and 7 pins have a positive voltage.)
- Pulse duration: Minimum ON time: 40ms
  Minimum OFF time: 100ms
- Possible unit of pulse: 0.1 pulse/kWh 1 pulse/kWh 10 pulse/kWh
  100 pulse/kWh 1000 pulse/kWh

Those values can be set by the main remote controller. (Refer to the menu tree in "Main remote controller".)
*5. As for the SG ready, refer to "Smart grid ready" in 7.7 System setup.

## ■ Thermistor inputs

| Name | Terminal block | Connector | Item | Optional part model |
|---|---|---|---|---|
| TH1 | — | CN20 | Thermistor (Room temp.) (Option) | PAC-SE41TS-E |
| TH2 | — | CN21 | Thermistor (Ref. liquid temp.) | — |
| THW1 | — | CNW12 1-2 | Thermistor (Flow water temp.) | — |
| THW2 | — | CNW12 3-4 | Thermistor (Return water temp.) | — |
| THW5A | — | CNW5 1-2 | Thermistor (DHW tank upper water temp.) | — |
| THW5B | — | CNW5 3-4 | Thermistor (DHW tank lower water temp.) | — |
| THW6 | TBI.5 7-8 | — | Thermistor (Zone1 flow water temp.) (Option) *1 | PAC-TH011-E |
| THW7 | TBI.5 5-6 | — | Thermistor (Zone1 return water temp.) (Option) *1 | |
| THW8 | TBI.5 3-4 | — | Thermistor (Zone2 flow water temp.) (Option) *1 | PAC-TH011-E |
| THW9 | TBI.5 1-2 | — | Thermistor (Zone2 return water temp.) (Option) *1 | |
| THW10 | TBI.6 5-6 | — | Thermistor (Mixing tank water temp.) | PAC-TH012HT-E |
| THWB1 | TBI.6 7-8 | — | Thermistor (Boiler flow water temp.) (Option) *1 | |

**Ensure to wire thermistor wirings away from the power line and/or OUT1 to 15 wirings.**

***1. The maximum length of the thermistor wiring is 30 m. When the wires are wired to adjacent terminals, use ring terminals and insulate the wires.**

**The length of the optional thermistors are 5 m. If you need to splice and extend the wirings, following points must be carried out.**

**1) Connect the wirings by soldering.**

**2) Insulate each connecting point against dust and water. Stranded wire should be processed with insulation-covered bar terminal (DIN46228-4 standard compatible type).**

## ■ Outputs

| Name | Terminal block | Connector | Item | OFF | ON | Signal/Max current | Max. total current |
|---|---|---|---|---|---|---|---|
| OUT1 | TBO.1 1-2 | CNP1 | Water circulation pump 1 output (Space heating & DHW) | OFF | ON | 230V AC 0.6A Max. | 3.0A |
| OUT2 | TBO.1 3-4 | — | Water circulation pump 2 output (Space heating for Zone1) | OFF | ON | 230V AC 1.0A Max. | |
| OUT3 | TBO.1 5-6 | — | Water circulation pump 3 output (Space heating for Zone2) *1<br>2-way valve 2b output *2 | OFF | ON | 230V AC 1.0A Max. | |
| OUT14 | — | CNP4 | Water circulation pump 4 output (DHW) | OFF | ON | 230V AC 0.4A Max. | |
| OUT4 | — | CN851 | 3-way valve output | Heating | DHW | — | 1.3A |
| OUT5 | TBO.2 1-2<br>TBO.2 2-3 | — | Mixing valve output *1 | Stop | Close<br>Open | 230V AC 0.1A Max. | |
| OUT6 | — | — | — | — | — | — | |
| OUT7 | — | — | — | — | — | — | |
| OUT8 | TBO.4 7-8 | — | — | — | — | — | |
| OUT9 | TBO.4 5-6 | CNIH | Immersion heater output | — | — | 230V AC 0.1A Max. (Relay) | |
| OUT11 | TBO.3 5-6 | — | Error output | Normal | Error | 230V AC 0.5A Max. | |
| OUT12 | TBO.3 7-8 | — | — | — | — | — | |
| OUT13 | TBO.4 3-4 | — | 2-way valve 2a output *2 | OFF | ON | 230V AC 0.1A Max. | |
| OUT15 | TBO.4 1-2 | — | Comp ON signal | OFF | ON | 230V AC 0.5A Max. | |
| OUT10 | TBO.3 1-2 | — | Boiler output | OFF | ON | non-voltage contact<br>·220-240V AC (30V DC)<br>0.5A or less<br>·10mA 5V DC or more | — |
| OUT16 | TBO.3 3-4 | — | Heating thermo ON signal | OFF | ON | | |
| OUTA1 | TBI.4 7-8 | — | Analog output (PICV Output) | OFF | ON | 0-10V DC 5mA max. | — |

**Do not connect to the terminals that are indicated as "—" in the "Terminal block" field.**
***1 For 2-zone temperature control.**
***2 For 2-zone valve ON/OFF control.**

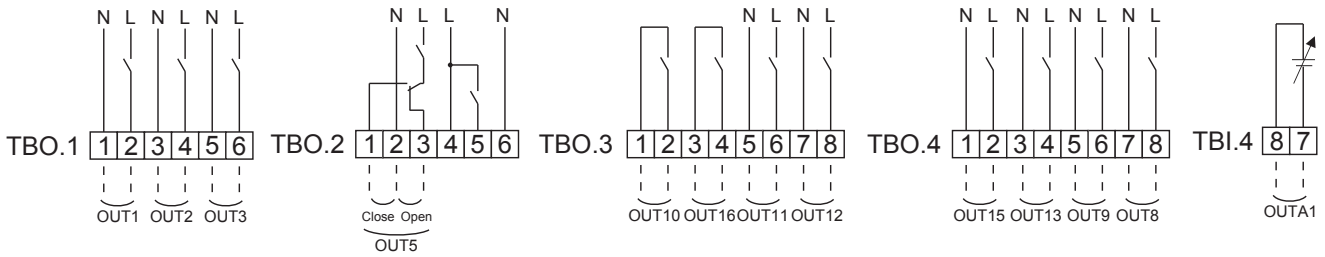


**Wiring specification and local supply parts**

| Item | Name | Model and specifications |
|---|---|---|
| External output function | Outputs wire | Use sheathed vinyl coated cord or cable.<br>Max. 30 m<br>Wire type: CV, CVS or equivalent<br>Wire size: Stranded wire: 0.25 mm² to 1.5 mm²<br>Solid wire: ø0.57 mm to ø1.2 mm |

**How to use TBO.1 to 4**

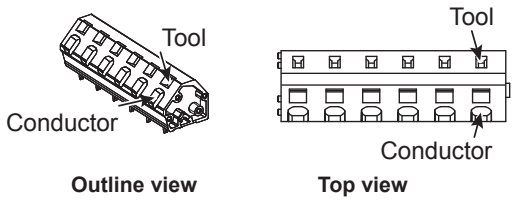


**Connect them using either way as shown above.**

<Figure 7.4.6>

**Note:**
1. **Do not connect multiple water circulation pumps directly to each output (OUT1, OUT2, and OUT3). In such a case, connect them via (a) relay(s).**
2. **Do not connect water circulation pumps to both TBO.1 1-2 and CNP1 at the same time.**
3. **Connect an appropriate surge absorber to OUT10 (TBO.3 1-2) depending on the load at site.**
4. **Stranded wire should be processed with insulation-covered bar terminal (DIN46228-4 standard compatible type).**
5. **Use the same thing as the Signal input wire for OUTA1 wiring.**

### 7.4.3 Wiring for 2-zone temperature control

Connect the pipe work and locally supplied parts according to the relevant circuit diagram shown “7.5.3 Local system 1”.

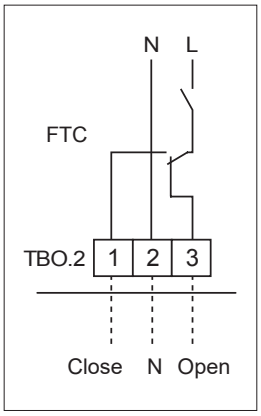


<Mixing valve>

Connect the signal line to open Port A (hot water inlet port) to TBO. 2-3 (Open), the signal line to open Port B (cold water inlet port) to TBO. 2-1 (Close) , and the neutral terminal wire to TBO. 2-2 (N).

<Thermistor>

- Do not install the thermistors on the mixing tank.
- Install the Zone2 flow temp. thermistor (THW8) near the mixing valve.
- The maximum length of the thermistor wiring is 30 m.
- The length of the optional thermistors are 5 m. If you need to splice and extend the wirings, following points must be carried out.
  1) Connect the wirings by soldering.
  2) Insulate each connecting point against dust and water.

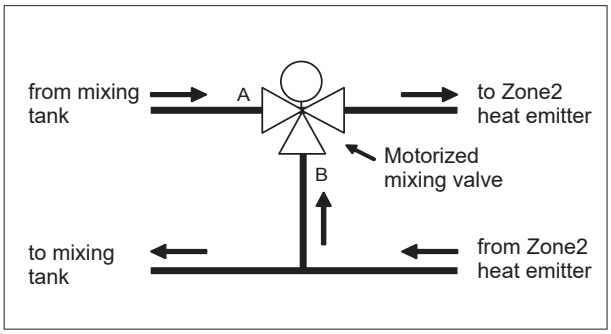


**Note:**
**Do not install the thermistors on the mixing tank. This could affect correct monitoring of flow and return temperatures through each zone.**
**Install the Zone2 flow temp. thermistor (THW8) near the mixing valve.**

### 7.4.4 2-zone valve ON/OFF control

Opening /closing 2-way valve provides a simple 2-Zone control.
Flow temperature is common for Zone1 and 2.

**1. Pipe work**

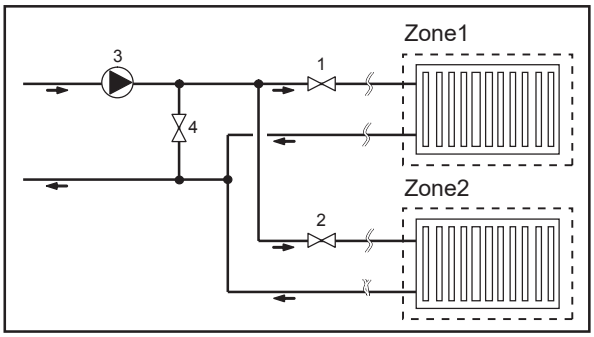


1. Zone1 2-way valve 2a (local supply)
2. Zone2 2-way valve 2b (local supply)
3. Water circulation pump 2 (local supply) *1
4. By-pass valve (local supply) *2

***1 Install according to system in the field.**
***2 For safety protection, it is recommended to install a auto-operational (eg. mechanical spring ie. not manual valve) by-pass valve.**

**Note:**
**Freeze stat function is deactivated whilst this control is ON. Use anti-freeze solution to avoid freezing, if necessary.**

**2. DIP switch**
Turn DIP switch 3-6 ON.

**3. 2-way valve 2a (for Zone1) / 2-way valve 2b (for Zone2)**
Electrically wire 2-way valve 2a and 2b to the appropriate external output terminals. (Refer to "External outputs" in 7.4.2)

**4. Room thermostat connection**

| Heating operation mode | Zone1 | Zone2 |
|---|---|---|
| Room temp. control (Auto adaptation) *3 | ● Wireless remote controller (option)<br>● Room temperature thermistor (option)<br>● Main remote controller (remote position) | ● Wireless remote controller (option) |
| Compensation curve or flow temp. control | ● Wireless remote controller (option) *4<br>● Room temperature thermostat (local supply) | ● Wireless remote controller (option) *4<br>● Room temperature thermostat (local supply) |

***3 Ensure to install the room thermostat for Zone1 in main room since the Room temp. control for Zone1 is prioritized.**
***4 The wireless remote controller can be used as a thermostat.**

### 7.4.5 Water circuit only operation (Indoor unit only operation) (during installation work)

During installation work, once the primary and sanitary circuits are fully charged with water it may be flexible to engaged the electric heater to provide DHW (For UK only). *

**1. To start operation**

- Check if the power supply is OFF, and turn DIP switch 4-4 and 4-5 ( on FTC) ON.
- Turn ON the power supply.

**2. To end operation*1**

- Turn OFF the power supply.
- Turn DIP switch 4-4 and 4-5 (on FTC) OFF.

*1 When the water circuit only operation is ended, ensure to check over the settings after ambient loop is connected and fully charged.

**Note:**

**Prolonged running of this operation may affect the life of the electric heater.**

*If booster heater equipped, the function is activated.

### 7.4.6 Using SD memory card

The heat pump unit is equipped with an SD memory card interface in FTC.
Using an SD memory card can simplify main remote controller settings and can store operating logs. *1

**<Handling precautions>**

(1) Use an SD memory card that complies with the SD standards. Check that the SD memory card has a logo on it of those shown to the right.
(2) SD memory cards to the SD standards include SD, SDHC, miniSD, micro SD, and microSDHC memory cards. The capacities are available up to 32 GB. Choose that with a maximum allowable temperature of 55ºC.
(3) When the SD memory card is a miniSD, miniSDHC, microSD, or micro SDHC memory card, use an SD memory card converter adapter.
(4) Before writing to the SD memory card, release the write-protect switch.

(5) Before inserting or ejecting an SD memory card, make sure to power off the system. If an SD memory card is inserted or ejected with the system powered on, the stored data could be corrupted or the SD memory card be damaged.
*An SD memory card is live for a short duration after the system is powered off. Before insertion or ejection wait until the LED lamps on the FTC control board are all off.
(6) The read and write operations have been verified using the following SD memory cards, however, these operations are not always guaranteed as the specifications of these SD memory cards could change.

| Manufacturer | Model | Tested in |
|---|---|---|
| Verbatim | #44015 | Mar. 2012 |
| SanDisk | SDSDB-002G-B35 | Oct. 2011 |
| Panasonic | RP-SDP04GE1K | Oct. 2011 |
| Arvato | 2GB PS8032 TSB 24nm MLC | Jun. 2012 |
| Arvato | 2GB PS8035 TSB A19nm MLC | Jul. 2014 |
| SanDisk | SDSDUN-008G-G46 | Oct. 2016 |
| Verbatim | #43961 | Oct. 2016 |
| Verbatim | #44018 | Oct. 2016 |
| VANTASTEK | VSDHC08 | Sep. 2017 |
| RiTEK | RiDATA 8GB SDHC | Aug. 2021 |

Before using a new SD memory card (including the card that comes with the unit), always check that the SD memory card can be safely read and written to by the FTC controller.
<How to check read and write operations>
a) Check for correct wiring of power supply to the system. For more details, refer to section 7.4.1. (Do not power on the system at this point.)
b) Insert an SD memory card.
c) Power on the system.
d) The LED4 lamp lights if the read and write operations are successfully completed. If the LED4 lamp continues blinking or does not light, the SD memory card cannot be read or written to by the FTC controller.

(7) Make sure to follow the instruction and the requirement of the SD memory card's manufacturer.
(8) Format the SD memory card if determined unreadable in step (6). This could make it readable.
Download an SD card formatter from the following site.
SD Association homepage: https://www.sdcard.org/home/
(9) FTC supports FAT file system but not NTFS file system.
(10) Mitsubishi Electric is not liable for any damages, in whole or in part, including failure of writing to an SD memory card, and corruption and loss of the saved data, or the like. Back up saved data as necessary.
(11) Do not touch any electronic parts on the FTC control board when inserting or ejecting an SD memory card, or else the control board could fail.

(a) For insertion, push on the SD memory card until it clicks into place.
(b) For ejection, push on the SD memory card until it clicks.
**Note: To avoid cutting fingers, do not touch sharp edges of the SD memory card connector (CN108) on the FTC control board.**

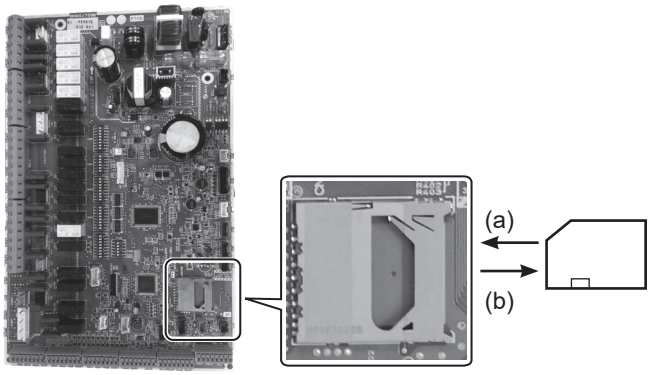


| Logos |
|---|
| |
| **Capacities** |
| 2 GB to 32 GB *2 |
| **SD speed classes** |
| All |

• The SD Logo is a trademark of SD-3C, LLC.
The miniSD logo is a trademark of SD-3C, LLC.
The microSD logo is a trademark of SD-3C, LLC.

*1 To edit main remote controller settings or to check operating data, an ecodan service tool (for use with PC) is required.
*2 A 2-GB SD memory card stores up to 30 days of operation logs.

## 7.5. Water circuit diagrams

### 7.5.1 Component Parts

### ■ Component Parts

| No. | Part name |
|---|---|
| A | DHW outlet pipe |
| B | Cold water inlet pipe |
| C | Water pipe (Space heating return connection (to heat pump)) |
| D | Water pipe (Space heating flow connection (from heat pump)) |
| E | Water/Brine pipe (Ambient loop return connection (to heat pump)) |
| F | Water/Brine pipe (Ambient loop flow connection (from heat pump)) |
| 1 | Control and electrical box |
| 2 | Main remote controller |
| 3 | Plate heat exchanger (Refrigerant - Primary circuit) |
| 4 | Low-pressure sensor |
| 5 | 3-way valve |
| 6 | Manual air vent |
| 7 | Drain cock (Primary circuit) |
| 8 | Manometer |
| 9 | Pressure relief valve (3 bar) (Primary circuit) |
| 10 | Automatic air vent |
| 11 | Expansion vessel (Primary circuit) (Local supply) |
| 12 | Flow sensor |
| 13 | Strainer valve |
| 14 | Water circulation pump 1 (Primary circuit) |
| 15 | Pump valve |
| 16 | DHW tank |
| 17 | Plate heat exchanger (Primary circuit (water) - Sanitary circuit (water)) |
| 18 | Scale trap |
| 19 | Water circulation pump (Sanitary circuit) |
| 20 | Immersion heater |
| 21 | Magnetic filter (Ambient loop) (Local supply) |
| 22 | Temperature and pressure relief valve |
| 23 | Drain cock (DHW tank) |
| 24 | Pressure relief valve (10 bar) (Ambient loop) (Local supply) |
| 25 | Flow water temp. thermistor (THW1) |
| 26 | Return water temp. thermistor (THW2) |
| 27 | DHW tank water temp. thermistor (THW5A) |
| 28 | DHW tank water temp. thermistor (THW5B) |
| 29 | Refrigerant liquid temp. thermistor (TH2) |
| 30 | Module |
| 31 | Drain pipe (Local supply) |
| 32 | Expansion vessel (Sanitary circuit (water)) *1 |
| 33 | Isolating valve (Local supply) |
| 34 | Magnetic filter (Local supply) (Recommended) |
| 35 | PICV (Pressure Independent Control Valve) (Local supply) |
| 36 | Compressor |
| 37 | High-pressure sensor |
| 38 | Linear expansion valve |
| 39 | Charge plug |
| 40 | Liquid temp. thermistor (TH3) |
| 41 | Discharge temp. thermistor (TH4) |
| 42 | Ambient temp. thermistor (TH7) |
| 43 | Heat sink temp. thermistor (TH8) |
| 44 | Plate heat exchanger (Water/Brine - Refrigerant) |
| 45 | Drain cock (Ambient loop) |
| 46 | Inlet control group *1 |
| 47 | Flow switch |
| 48 | Water inlet temperature (Ambient loop) thermistor (TH32) |
| 49 | Water outlet temperature (Ambient loop) thermistor (TH34) |
| 50 | Muffler |
| 51 | Drain cock (Sanitary circuit) |
| 52 | Filling loop (Ball valves, check valves and flexible hose) *1 |
| 53 | High-pressure switch |
| 54 | Compressor surface temperature (TH33) |

<Table 7.5.1>

*1 Supplied with UK model ONLY.
Please refer to PAC-WK02UK-E Installation Manual for more information on accessories.

Note: For parts not shown on this page, please refer to 'Circuit diagram <Figure 7.5.2>'.

**<Overall>**

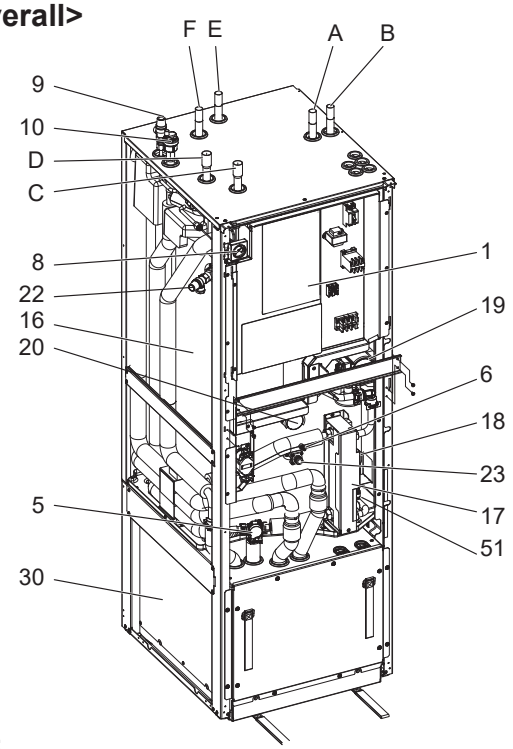


**Note:**
**For installation, make sure to install a suitably sized primary-side expansion vessel. (See figure 7.5.2 and 7.6.4 for further guidance)**

**<Module>**

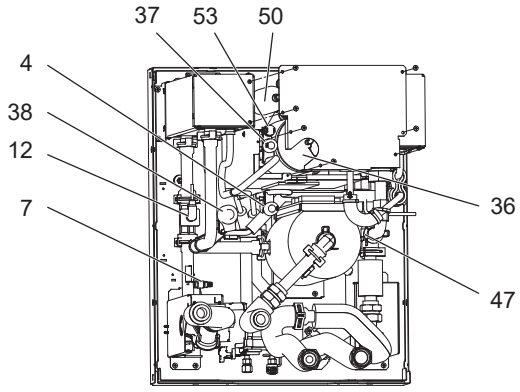


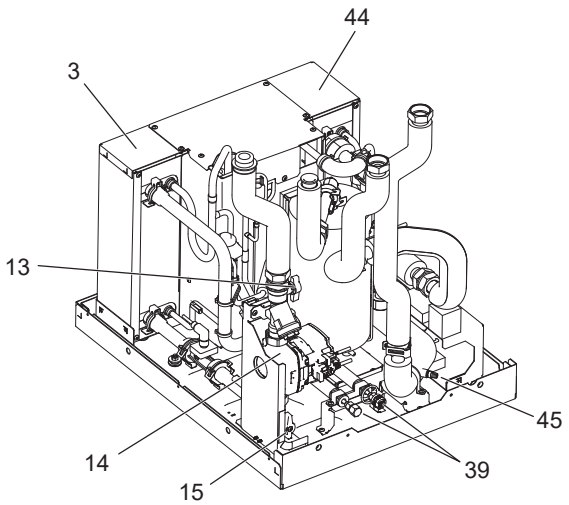


<Figure 7.5.1>

### 7.5.2 Circuit diagram

• Refer to <Table 7.5.1> for the part names.

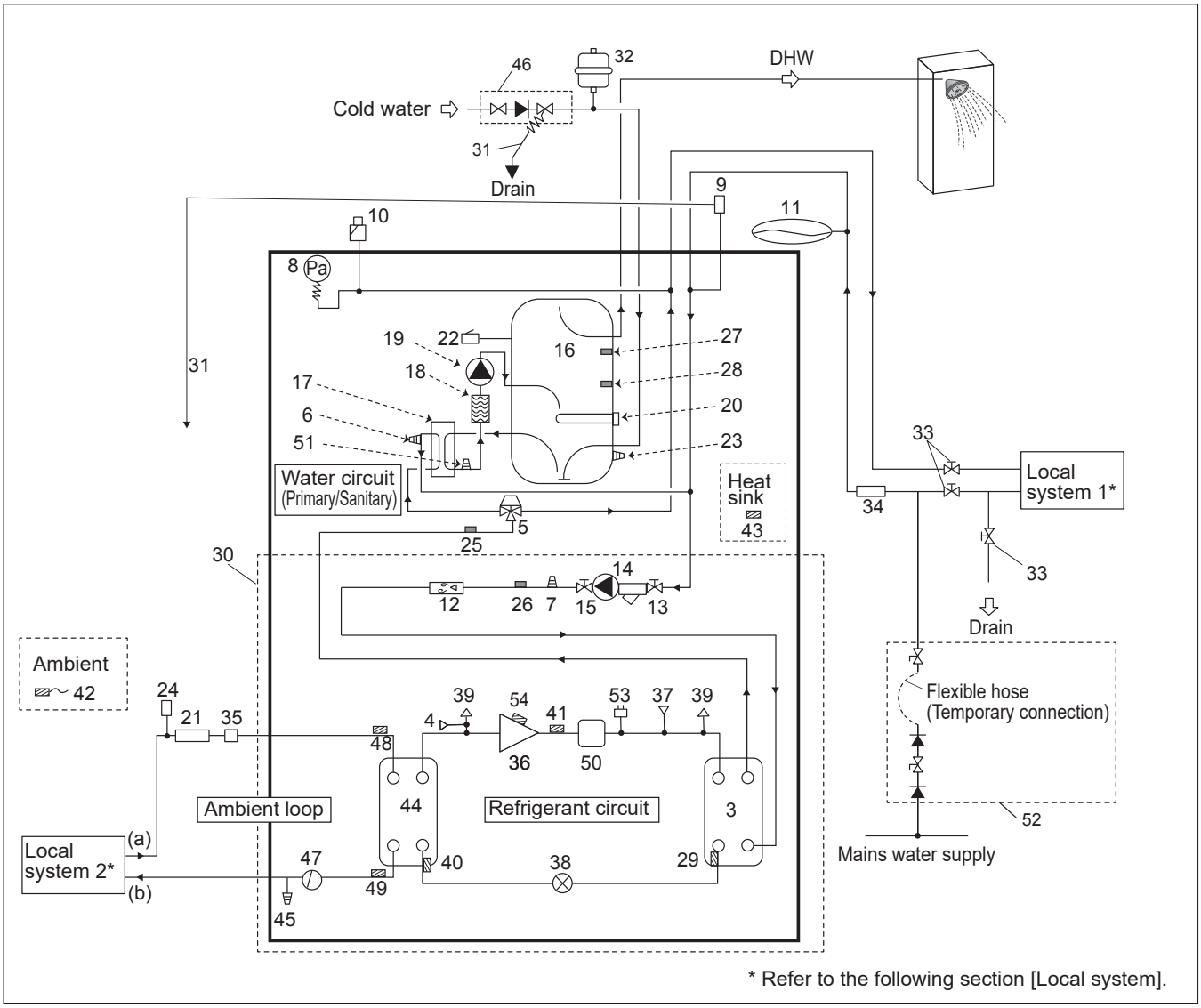


<Figure 7.5.2>

Note
- To enable draining of water circuit an isolating valve should be positioned on both the inlet and outlet pipework. No valve should be fitted between the expansion valve (part of item 46) and the heat pump unit (safety matter).
- For space heating (primary) circuit a suitable expansion vessel MUST be supplied and fitted by installer. (See figure 7.6.4) Be sure to install a magnetic filter (item 34) on the inlet pipework to the heat pump unit.
- Suitable drain pipework should be attached to the relief valves instructed to be connected to it in Figure 7.5.2 in accordance with your country's regulations.
- When using components made from different metals or connecting pipes made of different metals insulate the joints to prevent any corrosive reaction taking place which may damage the pipework. Filling loop's flexible hose must be removed following the filling procedure. This flexible hose (Item 52) is included in PAC-WK02-E.
- Install the inlet control group (item 46) above the level of the T&P relief valve (item 22).
  This will ensure DHW tank will not require drain down to service/maintain the inlet control group.

| Model name | EHWT17D-MHEDW |
|---|---|
| Maximum supply pressure to the pressure reducing valve | 16 bar |
| Operating pressure (Sanitary side) | 3.5 bar |
| Expansion vessel charge setting pressure (Sanitary side) | 3.5 bar |
| Expansion valve setting pressure (Sanitary side) | 6.0 bar |
| Immersion heater specification (Sanitary side) * | 3000 W, 230 V |
| DHW tank capacity | 170 L |
| Mass of the unit when full | 345 kg |
| Maximum primary working pressure | 2.5 bar |
| Maximum sanitary-side working pressure | 5.5 bar |
| Maximum ambient loop working pressure | 9.5 bar |

* EN60335/Type 3000W single phase 230V 50Hz, length 460 mm.
Use only Mitsubishi Electric service parts as a direct replacement.

### 7.5.3 Local system 1

**1-zone temperature control**

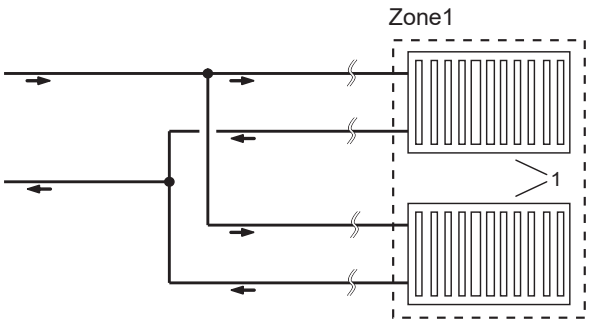


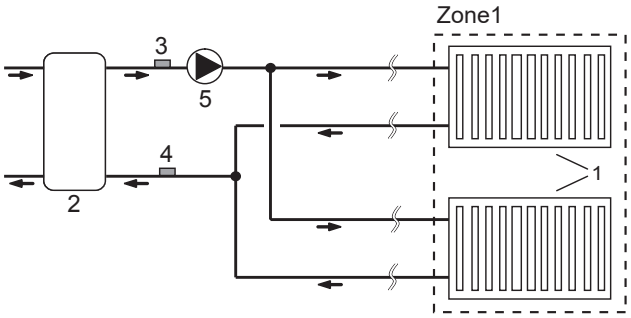


**2-zone temperature control**

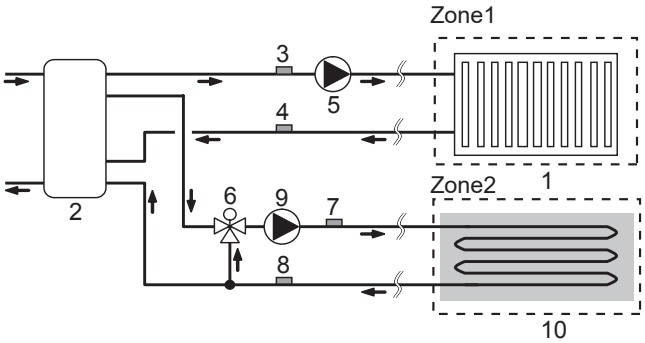


**1-zone temperature control with boiler**

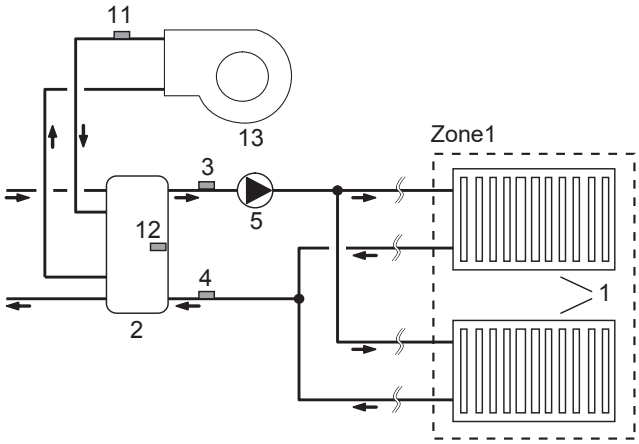


**2-zone temperature control with boiler**

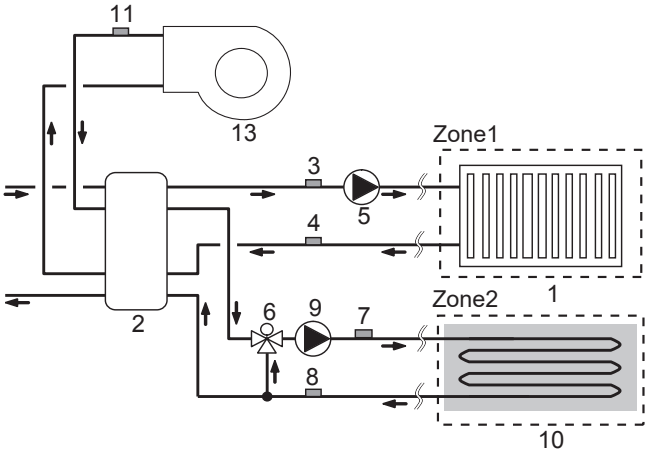


**1-zone temperature control (2-zone valve ON/OFF control)**

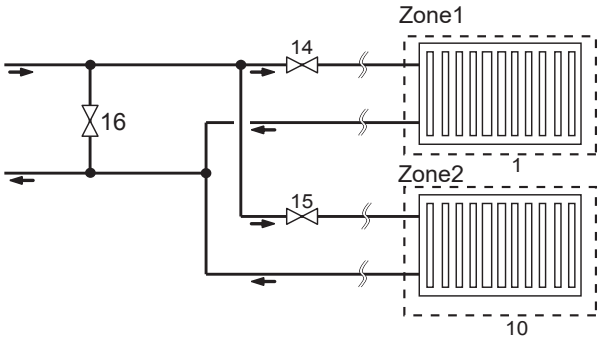


1. Zone1 heat emitters (e.g. radiator, fan coil unit) (local supply)
2. Mixing tank (local supply)
3. Zone1 flow water temp. thermistor (THW6) } Optional part : PAC-TH011-E
4. Zone1 return water temp. thermistor (THW7)
5. Zone1 water circulation pump (local supply)
6. Motorized mixing valve (local supply)
7. Zone2 flow water temp. thermistor (THW8) } Optional part : PAC-TH011-E
8. Zone2 return water temp. thermistor (THW9)
9. Zone2 water circulation pump (local supply)
10. Zone2 heat emitters (e.g. underfloor heating) (local supply)
11. Boiler flow water temp. thermistor (THWB1) } Optional part : PAC-TH012HT-E
12. Mixing tank thermistor (THW10)
13. Boiler (local supply)
14. Zone1 2-way valve (local supply)
15. Zone2 2-way valve (local supply)
16. Bypass valve (local supply)

### 7.5.4 Local system 2

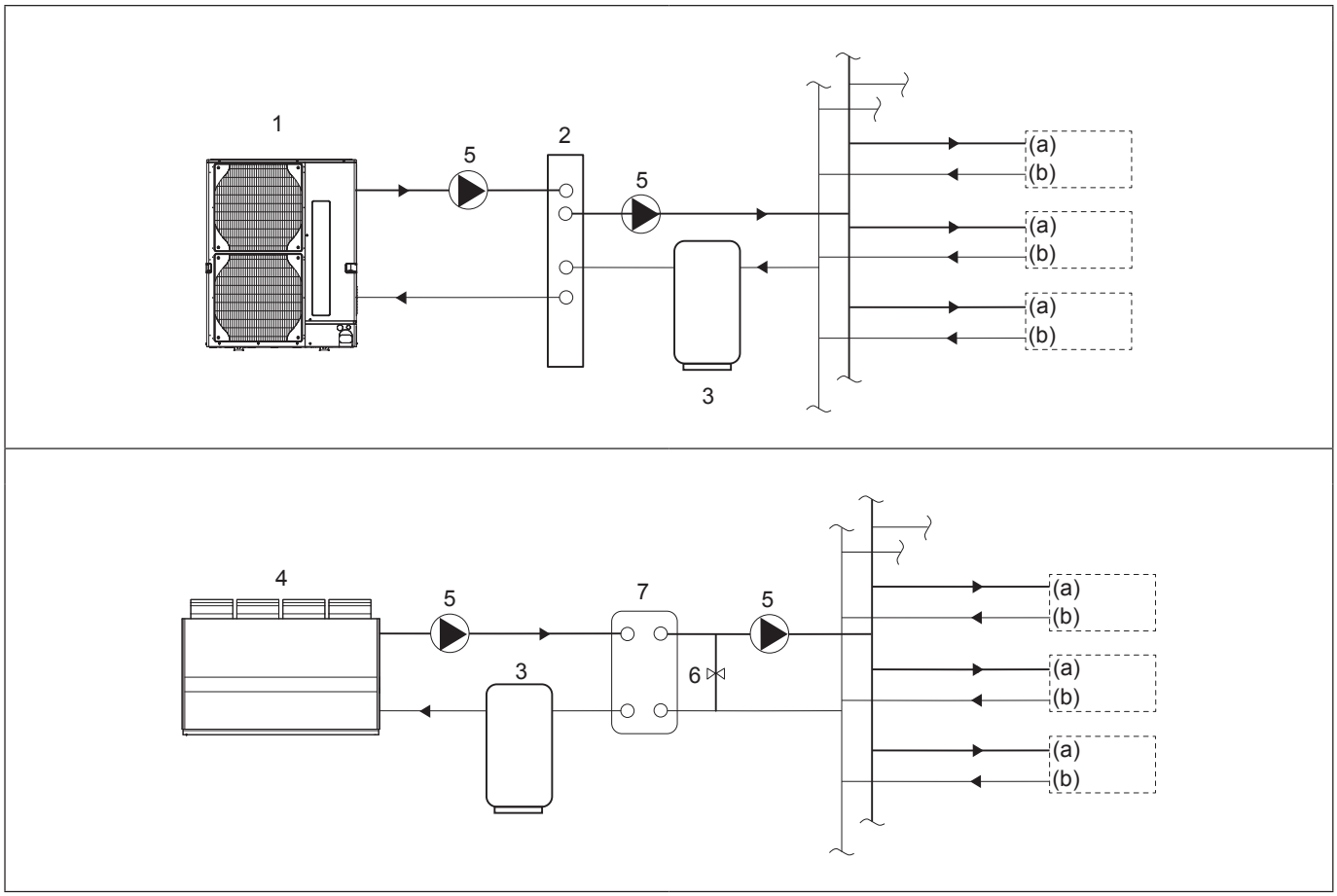


1. Air to Water Heat Pump
2. Header
3. Buffer Tank
4. Central plate Heat source / Heat pump
5. Pump
6. Valve
7. Heat exchanger

## 7.6. Installation

**<Preparation before the installation and service>**

- Prepare the proper tools.
- Prepare the proper protection.
- Allow parts to cool before attempting any maintenance.
- Provide adequate ventilation.
- After stopping the operation of the system, turn off the power-supply breaker and remove the power plug.
- Discharge the capacitor before commencing work involving the electric parts.

**<Precautions during service>**

- Do not perform work involving electric parts with wet hands.
- Do not pour water or liquid into the electric parts.
- Do not touch the refrigerant.
- Do not touch the hot or cold surfaces in the refrigerant cycle.
- When the repair or the inspection of the circuit needs to be carried out without turning off the power, exercise great caution NOT to touch any LIVE parts.



### 7.6.1 Location

#### ■ Transportation and Handling

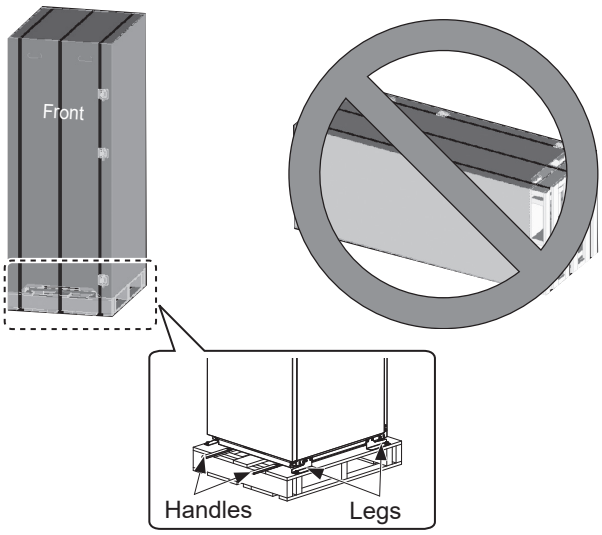


<Figure 7.6.1>

The heat pump unit is delivered on a wooden pallet base with cardboard protection.

Care should be taken when transporting the heat pump unit that the casing is not damaged by impact. Do not remove the protective packaging until heat pump unit has reached its final location. This will help protect the structure and control panel.

- The heat pump unit can be transported **ONLY** vertically. **The maximum allowable inclination is 45°.**

| |
|---|
| Module MUST be separated if it can only be transported/ carried horizontally.* |

<see How to remove the module>. (during installation)

- The heat pump unit should ALWAYS be moved by a minimum of 2 people.
- When carrying the heat pump unit use the handles provided.
- Before using the handles, make sure they are securely attached.
- **Please remove fixing legs, wooden base and any other packaging once the unit is in installation location.**

* Module removal, carrying and reassembling are installer's responsibility.

#### ■ Suitable Location

| |
|---|
| Before installation the heat pump unit should be stored in a frost-free weatherproof location. Units must **NOT** be stacked. |

- The heat pump unit should be installed indoors in a frost free weather proof location.
- The heat pump unit should be positioned on a level surface capable of supporting 'it's **FILLED** weight. (Adjustable feet (accessory parts) can be used to ensure unit I level)
- When using the adjustable feet, ensure that the floor is strong enough.
- Care should be taken that minimum distances around and in front of the unit for service access are observed <Figure 7.6.2>.
- Secure the heat pump unit to prevent it being knocked over.
- Install the heat pump unit where it is not exposed to water/ excessive moisture.

#### ■ Service access diagrams

| Service access | |
|---|---|
| Parameter | Dimension (mm) |
| a | 300 |
| b | 150 |
| c (distance behind unit not visible in Figure 7.6.2) | 10 |
| d | 700** |
| e | 150* |

<Table 7.6.1>

* An additional space is required, when brine pipe connecting to the side.

** Including service space for Module removal.

Sufficient space MUST be left for the provision of discharge pipework as detailed in National and Local Building Regulations.

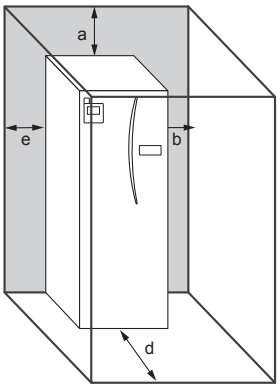


<Figure 7.6.2>
Service access

| |
|---|
| The heat pump unit must be located indoors and in a frost-free environment, for example in a utility room, to minimise heat loss from stored water. |

## ■ Room thermostat

If fitting a new room thermostat for this system;
- Position it out of direct sunlight and draughts
- Position it away from internal heat sources
- Position it in a room without a TRV on the radiator/heat emitter.
- Position it on an internal wall

**Note:**
**Do not position the thermostat excessively close to the external wall.**
**The thermostat may detect the temperature of the wall, which could affect appropriate control of the room temperature.**
- Position it approx. 1.5 m from floor level

## ■ Ambient temperature thermistor (TH7)

Please install the ambient temperature thermistor (TH7) in a place where external influences such as wind and sunlight are minimized. Please install the ambient temperature thermistor (TH7) cable in a place where people cannot touch. Run the cable inside the wall or above the ceiling when installing the ambient temperature thermistor (TH7) cable. Use a fixable wiring cover to secure the wiring from the top of the unit to the wall or ceiling.

## ■ Repositioning

If you need to move the heat pump unit to a new position FULLY DRAIN the heat pump unit before moving to avoid damage to the unit. (See earlier instruction transportal handling.)

**⚠ Warning**
**Refrigerant pipes connection shall be accessible for maintenance purposes.**

## ■ How to remove the module

**1. Remove the FRONT PANEL (four screws)**

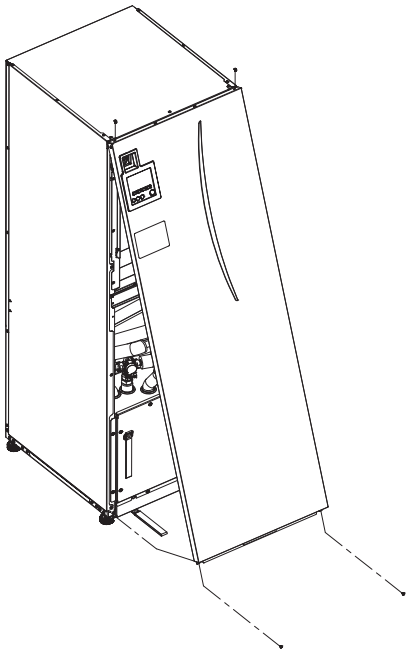

**2. Remove the four screws that fix the MODULE FRONT and FRAME**

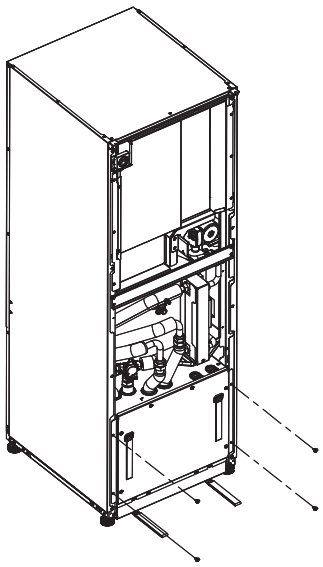

**3. CYLINDER - MODULE**

<WIRE>
Remove the 7 connectors from the MODULE BOX.
Remove the wires from the top of the MODULE BOX and the wire clamps on the Primary/Sanitary P-HEX.
· UNIT SIDE
Put them together under the CONT BOX
· MODULE SIDE
Put them together on the MODULE BOX

<PIPE>
Remove the following four points.
① Plate heat exchanger (Water/Brine - Refrigerant) IN
② Plate heat exchanger (Water/Brine - Refrigerant) OUT
③ 3 WAY VALVE - Primary flow (from MODULE)
④ Primary Water Pump-Water in (Return)

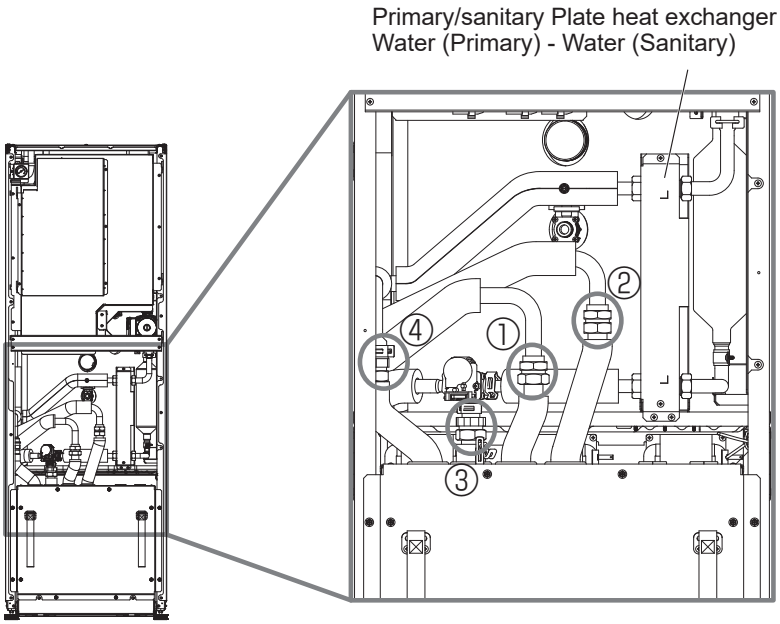

**4. Pull the MODULE BOX out by using the MODULE HANDLES**

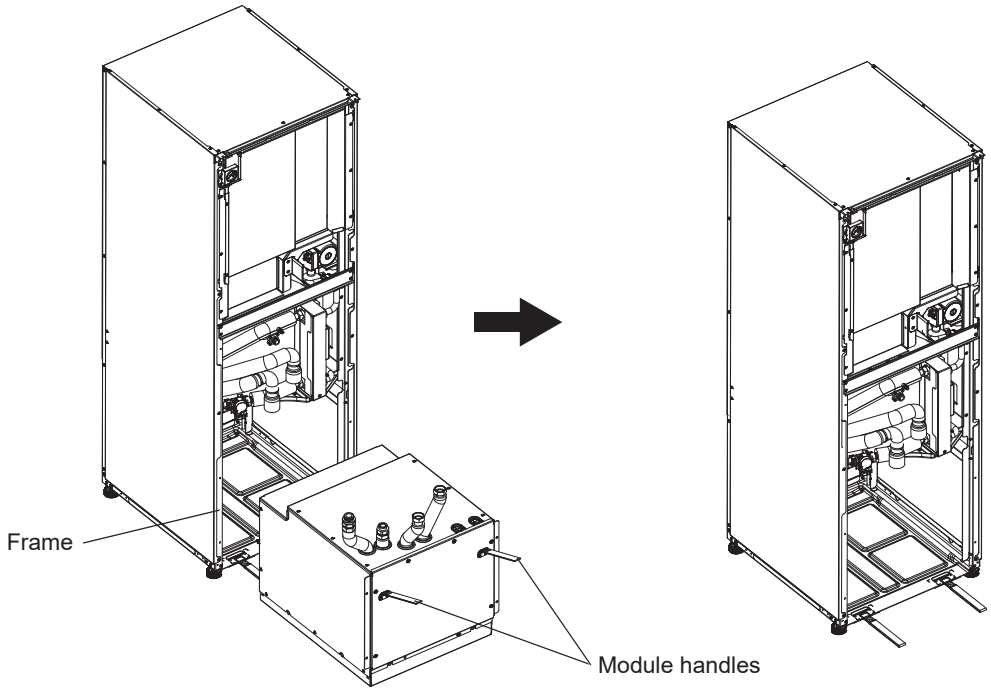


**5. After pulling MODULE BOX out**

Fit the cap or plastic bag etc. (local supply) on flexible pipes.
Please bundle the wires during transportation and secure them with band etc. on the module.

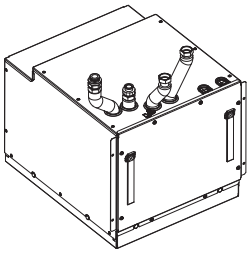

* The module is then re-installed in reverse order.
When returning the Module unit assy to the unit, be careful not to get your hands caught between the unit and the Module unit assy. Hold the module unit assy with nylon bands (Module handles), NOT the corners of it (HAZARD).

### 7.6.2 Water/Ambient Loop Quality and System Preparation

## <Water>

### ■ General

- The water in both primary and sanitary circuit should be clean and with pH value of 6.5-8.0
- The followings are the maximum values;
  Calcium: 100 mg/L, Ca hardness: 250 mg/L
  Chloride: 100 mg/L, Copper: 0.3 mg/L
- Other constituents should be to European Directive 98/83 EC standards.
- In known hard water areas, to prevent/minimise scaling, it is beneficial to restrict the routine stored water temperature (DHW max. temp.) to 55°C.

### ■ Anti-Freeze

Anti-freeze solutions should use propylene glycol with a toxicity rating of Class 1 as listed in Clinical Toxicology of Commercial Products, 5th Edition.

**Note:**

**1. Ethylene glycol is toxic and should NOT be used in the primary water circuit in case of any cross-contamination of the sanitary circuit.**

**2. For 2-zone valve ON/OFF control, propylene glycol should be used.**

### ■ Installation (primary water circuit)

- Before installation heat pump unit, thoroughly cleanse pipework of building debris, solder etc using a suitable chemical cleansing agent.
- Flush the system to remove chemical cleanser.
- The responsible installer should decide if anti-freeze solution is necessary for each site's conditions. Corrosion inhibitor however should ALWAYS be used.

When using chemical cleansers and inhibitors always follow manufacturer's instructions and ensure the product is appropriate for the materials used in the water circuit.

## <Ambient loop>

### ■ General

- The water in both primary and sanitary circuit should be clean and with pH value of 6.5-8.0
- The followings are the maximum values;
  Calcium: 100 mg/L, Ca hardness: 250 mg/L
  Chloride: 100 mg/L, Copper: 0.3 mg/L
- Other constituents should be to European Directive 98/83 EC standards.
- **Installer MUST** fill water or the following antifreeze solution mix when filling the ambient loop.
- The water in Ambient loop should be clean and with pH value of 6.5-8.0.
  38 WT% propylene glycol
  29 WT% bioethanol
  25 WT% ethylene glycol
  **Note: DO NOT use Inorganic brine.**
- Fit the local supply particle filter on the incoming pipe.
- Use the heat pump unit ONLY in a closed system for ambient loop. Using the system in an open system will lead to excessive corrosion.

### ■ Installation (Ambient loop)

- Before installation of heat pump unit, thoroughly cleanse pipework of building debris, solder etc using a suitable chemical cleansing agent.
- Flush the system to remove chemical cleanser.

When using chemical cleansers and inhibitors always follow manufacturer's instructions and ensure the product is appropriate for the materials used in the circuit.

### ■ Amount of brine required in the ambient loop

- As a measure of the brine filling amount, please make approximation of 1 L/m of collector hose length.

---

### ■ How to access Internal Components and Control and Electrical Box

<A> Opening the front panel

1. Remove the two lower screws and two upper screws.
2. Slide front panel upwards to slightly and open carefully.
3. Disconnect the relay connector connecting main remote controller cable and the control board cable.

<B> Accessing the back of the control and electrical box

The control and electrical box has 8 holding screws and is hinged on the right hand side.

1. Remove the 4 screws fixing the metal plate (with a warning label) in front of the electrical box, then lift the plate to remove.
2. Remove the holding screws on the control and electrical box.
3. The control and electrical box can then be swung forward on the right hand hinges.

**Note:**

**After servicing, re-secure all cables using straps provided. Reconnect main remote controller cable to its relay connector. Replace front panel and resecure screws.**

### 7.6.3 Water Pipe Work

#### ■ Hot Water Pipework

**The heat pump unit is UNVENTED.** When installing unvented hot water systems building regulations part G3 (England and Wales), P3 (Scotland) and P5 (Northern Ireland) should be adhered to. If outside of the UK please adhere to your own country's regulations for unvented hot water systems.

Connect the flow for the DHW to pipe A (Figure 7.5.1).
The function of the following safety components of the heat pump unit should be checked on installation for any abnormalities;
- Pressure relief valve (Primary circuit and Tank)
- Expansion vessel pre-charge (gas charge pressure)

The instruction on the following pages regarding safe discharge of hot water from Safety devices should be followed carefully.
- The pipework will become very hot, so should be insulated to prevent burns.
- When connecting pipework, ensure that no foreign objects such as debris etc. enter the pipe work.

#### ■ Cold Water Pipework

Cold water to the suitable standard (see section 7.6.2) should be introduced to the system by connecting pipe B (Figure 7.5.1) using appropriate fittings.

#### ■ Negative pressure prevention

To prevent negative pressure effecting DHW tank, installer should install appropriate pipework or use appropriate devices.

#### ■ Pipework Connections

Connections to the heat pump unit should be made using the 22 mm or 28 mm compression as appropriate.
When connecting DHW pipes using compression fittings, insert copper liner for DHW pipe (accessory parts) into the pipes and tighten them from 0.75 to 1.25 turns.
Do not over-tighten compression fittings as this will lead to deformation of the olive ring and potential leaks.
**Note:**
**<u>Before</u> brazing pipes in the field, protect pipes on the cylinder unit using wet towels etc as "heat shield".**

#### ■ Insulation of Pipework

- All exposed water pipework should be insulated to prevent unnecessary heat loss and condensation. To prevent condensate entering the heat pump unit, the pipework and connections at the top of the heat pump unit should be carefully insulated.
- Cold and hot water pipework should not be run close together where possible, to avoid unwanted heat transfer.
- Pipework should be insulated with suitable pipe insulation material with a thermal conductivity of ≤ 0.04 W/m.K.



#### ■ Filling the System (Primary Circuit)

1. Check and charge expansion vessel.
2. Check all connections including factory fitted ones are tight.
3. Insulate pipework.
4. Thoroughly clean and flush, system of all debris. (see section 7.6.2 for instruction.)
5. Fill heat pump unit with sanitary water. Fill primary heating circuit with water and suitable anti-freeze and inhibitor as necessary. Always use a filling loop with double check valve when filling the primary circuit to avoid back flow contamination of water supply.

When connecting metal pipes of different materials insulate the joints to prevent a corrosive reaction taking place which will damage the pipework.

6. Check for leakages. If leakage is found, retighten the nut onto the connections.
7. Pressurise system to 1 bar.
8. Release all trapped air using air vents during and following heating period.
9. Top up with water as necessary. (If pressure is below 1 bar)

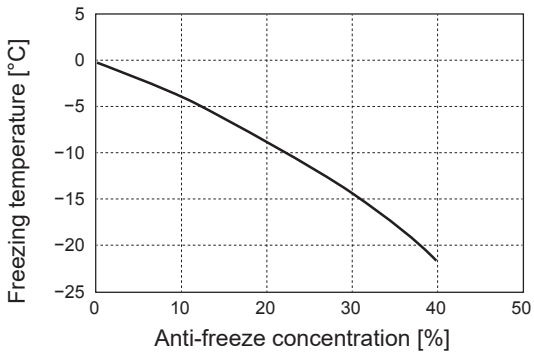


<Figure 7.6.3>

## Sizing Expansion Vessels

Expansion vessel volume must fit the local system water volume.
To size an expansion vessel for the heating circuit the following formula and graph can be used. When the necessary expansion vessel volume exceeds the volume of an built-in expansion vessel, install an additional expansion vessel so that the sum of the volumes of the expansion vessels exceeds the necessary expansion vessel volume.
For installation of the heat pump unit, the installer MUST provide and install a suitable primary-side expansion vessel as the model **DOES NOT** come fitted with a primary-side expansion vessel.

$$V = \frac{\varepsilon \times G}{1 - \frac{P_1 + 0.098}{P_2 + 0.098}}$$

Where;
V : Necessary expansion vessel volume [L]
ε : Water expansion coefficient
G : Total volume of water in the system [L]
$P_1$ : Expansion vessel setting pressure [MPa]
$P_2$ : Max. pressure during operation [MPa]

Graph to the right is for the following values

ε : at 70 °C = 0.0229
$P_1$ : 0.1 MPa
$P_2$ : 0.3 MPa
*A 30% safety margin has been added.

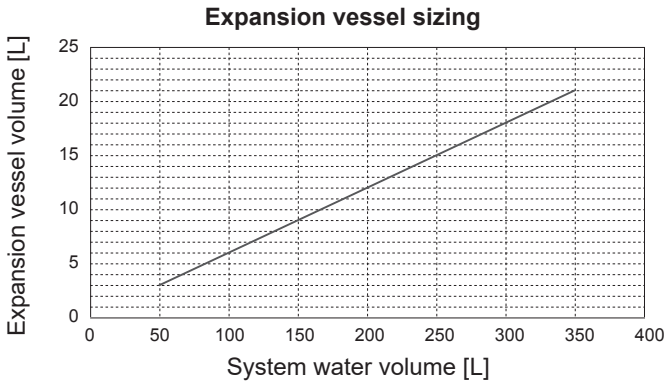


<Figure 7.6.4>

### 7.6.4 Water Circulation Pump Characteristics

**1. Primary circuit**
Pump speed can be selected by main remote controller setting (see <Figure 7.6.5> ).
Adjust the pump speed setting so that the flow rate in the primary circuit is appropriate for the Table 7.6.2. It may be necessary to add an additional pump to the system depending on the length and lift of the primary circuit.

| Water flow rate range [L/min] | 7.1-27.7 |
|---|---|

<Table 7.6.2>

* If the water flow rate is less than 7.1 L/min, the flow rate error will be activated.
If the water flow rate exceeds 27.7 L/min, the flow speed will be greater than 1.5 m/s, which could erode the pipes.

<Second pump >
If a second pump is required for the installation please read the following carefully.
If a second pump is used in the system it can be positioned in 2 ways.
The position of the pump influences which terminal of the FTC the signal cable should be wired to. If the additional pump(s) have current greater than 1A please use appropriate relay. Pump signal cable can either be wired to TBO.1 1-2 or CNP1 but NOT both.

Option 1 (Space heating only)
If the second pump is being used for the heating circuit only then the signal cable should be wired to TBO.1 terminals 3 and 4 (OUT2). In this position the pump can be run at a different speed to the heat pump unit's in-built pump.

**2. Sanitary circuit**
Default setting: Speed 2
DHW circulation pump MUST be set to speed 2.

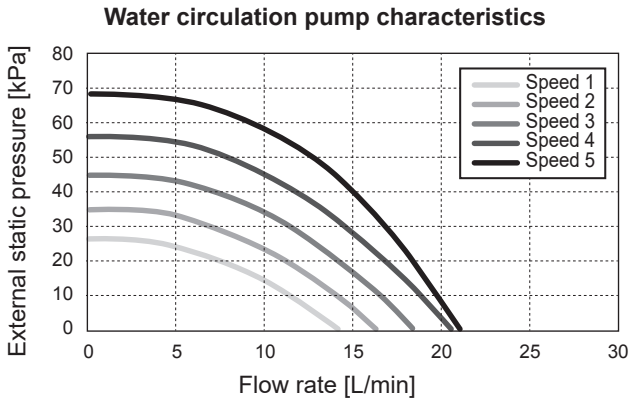


<Figure 7.6.5>

## Immersion heater

When an immersion heater is fitted, do NOT energise the heater until the DHW tank is full of water. Also do NOT energise any immersion heater if any sterilisation chemicals remain in the DHW tank as this will cause premature failure of the heater.

### 7.6.5 Safety Device Connections

The expansion relief valve on the secondary hot water side, and the temperature and pressure (T&P) relief valve (*A), both need appropriate discharge pipework. There must be no valve fitted between the expansion relief valve and the tank.

*A EHWT17D-MHEDW is equipped with T & P relief valve on the tank (2). Other models are equipped with Pressure relief valve, fitted to the DHW pipework (3).

**Note : 1. Do not secure the screws excessively when connecting the Discharge pipe, otherwise it may result in damage to the cylinder unit.**

**<For UK>**

The right side panel has a plate (*B) so that connection can be made to the factory fitted temperature and pressure relief valve. If you wish to make the connection in a different position you will have to cut a hole in the side panel yourself. However it remains necessary that the drainage parameters outlined in the appropriate Building Regulations are complied with.

*B Unscrew the plate on the right-side panel, connect the Pressure relief valve to the discharge pipework, and refit the plate. Always replace the plate so that no gaps exist between the plate and side panel and the plate and drain pipe to avoid heat loss.
In accordance with Building Regulations a tundish must be fitted into the pipework within 500 mm of the safety device (also see Figure 7.6.7). Due to the distance between the two safety devices it may be necessary to fit each safety device with its own tundish before you run the pipework together to a safe discharge (see Figure 7.6.6).

**Note : 2. Alternatively the discharges from the expansion relief valve and T&P relief valve may commonly discharge to a singular tundish, so long as this tundish is located within 500 mm of the T&P relief valve in UK. When connecting discharge pipes to the safety devices, beware not to strain the inlet connections.**

| Diagram part No. | Description | Connection size | Connection type |
|---|---|---|---|
| 1 | Expansion relief valve (part of inlet control group) | 15 mm | Compression |
| 2 | T&P relief valve | 15 mm /G 1/2 | Compression/ Female |
| 3 | Pressure relief valve | G 1/2 | Female |

<Table 7.6.3>

Always refer to local regulations when installing discharge pipework.
Install discharge pipework in a frost-free environment.
It is necessary to provide appropriate drainage from the pressure relief valve situated on top of the cylinder unit to prevent damage to the unit and the surrounding area from any steam or hot water released. Relief valves MUST NOT be used for any other purpose.

For UK use PAC-WK02UK-E kit, for other countries please see below;

- Any discharge pipework should be capable of withstanding discharge of hot water. Discharge pipework should be installed in a continuously downward direction. Discharge pipework must be left open to the environment.

**<UK model>**
**EHWT17D-MHEDW**

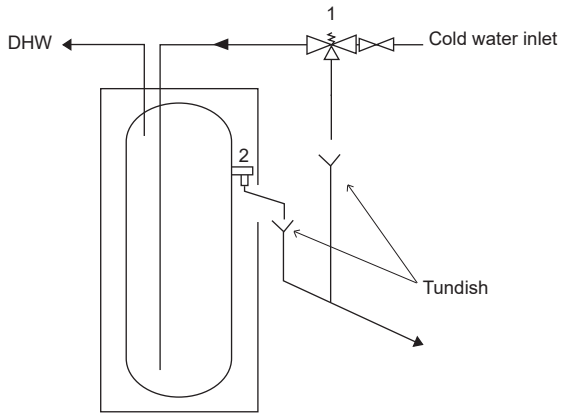


**<Other models>**

The expansion vessel on the sanitary water side shall be installed as necessary in accordance with your local regulations.

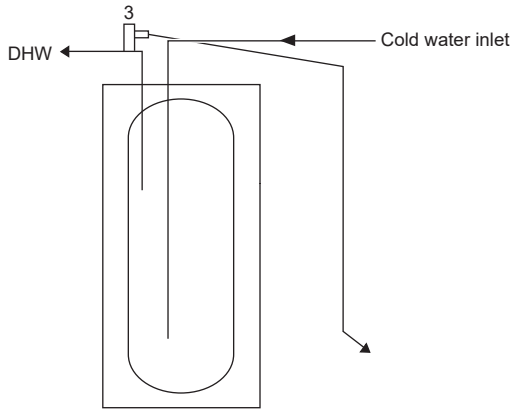


<Figure 7.6.6>

## ■ Piping diagram for 2-zone temperature control

Connect the pipe work and locally supplied parts according to the relevant circuit diagram shown in Section 3. Technical Information, of this manual.
For more details on wiring, refer to “7.4.3 Wiring for 2-zone temperature controls”.

**Note: Do not install the thermistors on the mixing tank. This could affect correct monitoring of flow and return temperatures through each zone. Install the Zone2 flow temp. thermistor (THW8) near the mixing valve.**

## 7.6.6 Safety Device Discharge Arrangements (G3)

**The following instructions are a requirement of UK Building Regulations and must be adhered to. For other countries please refer to local legislation. If you are in any doubt please seek advice from local building planning office.**

1. Position the inlet control group so that discharge from both safety valves can be joined together via a 15 mm end feed Tee.
2. Connect the tundish and route the discharge pipe as shown in Figure 7.6.7.
3. The tundish should be fitted vertically and as close to the safety device as possible and within 500 mm of the device.
4. The tundish should be visible to occupants and positioned away from electrical devices.
5. The discharge pipe (D2) from the tundish should terminate in a safe place where there is no risk to persons in the vicinity of the discharge, be of metal construction and:

A) Be at least one pipe size larger than the nominal outlet size of the safety device unless its total equivalent hydraulic resistance exceeds that of a straight pipe 9 m long i.e. discharge pipes between 9 m and 18 m equivalent resistance length should be at least two sizes larger than the nominal outlet size of the safety device, between 18 and 27 m at least 3 sizes larger, and so on. Bends must be taken into account in calculating the flow resistance. Refer to Figure 7.6.7, Table 7.6.4 and the worked example. An alternative approach for sizing discharge pipes would be to follow BS 6700: 1987 specification for design installation, testing and maintenance of services supplying water for domestic use within buildings and their cartilages.

B) Have a vertical section of pipe at least 300 mm long, below the tundish before any elbows or bends in the pipework.

C) Be installed with a continuous fall.

D) Have discharges visible at both the tundish and the final point of discharge but where this is not possible or is practically difficult there should be clear visibility at one or other of these locations. Examples of acceptable discharge arrangements are:

***i***. Ideally below a fixed grating and above the water seal in a trapped gully.

***ii***. Downward discharges at low level; i.e. up to 100 mm above external surfaces such as car parks, hard standings, grassed areas etc. are acceptable providing that where children may play or otherwise come into contact with discharges a wire cage or similar guard is positioned to prevent contact, whilst maintaining visibility.

***iii***. Discharges at high level; e.g. into a metal hopper and metal down pipe with the end of the discharge pipe clearly visible (tundish visible or not) or onto a roof capable of withstanding high temperature discharges of water and 3 m from any plastic guttering system that would collect such discharges (tundish visible).

***iv***. Where a single pipe serves a number of discharges, such as in blocks of flats, the number served should be limited to not more than 6 systems so that any installation discharging can be traced reasonably easily. The single common discharge pipe should be at least one pipe size larger than the largest individual discharge pipe (D2) to be connected. If unvented hot water storage systems are installed where discharges from safety devices may not be apparent i.e. in dwellings occupied by blind, infirm or disabled people, consideration should be given to the installation of an electronically operated device to warn when discharge takes place.

**Note: The discharge will consist of scalding water and steam. Asphalt, roofing felt and nonmetallic rainwater goods may be damaged by such discharges.**

**Worked example:** The example below is for a G½ temperature relief valve with a discharge pipe (D2) having 4 No. elbows and length of 7 m from the tundish to the point of discharge.

From Table 7.6.4: Maximum resistance allowed for a straight length of 22 mm copper discharge pipe (D2) from a G½ temperature relief valve is: 9.0 m subtract the resistance for 4 No. 22 mm elbows at 0.8 m each = 3.2 m. Therefore the maximum permitted length equates to: 5.8 m. 5.8 m is less than the actual length of 7 m, therefore calculate the next largest size. Maximum resistance allowed for a straight length of 28 mm pipe (D2) from a G½ temperature relief valve equates to: 18 m
Subtract the resistance for 4 No. 28 mm elbows at 1.0 m each = 4 m. Therefore the maximum permitted length equates to: 14 m. As the actual length is 7 m, a 28 mm (D2) copper pipe will be satisfactory.

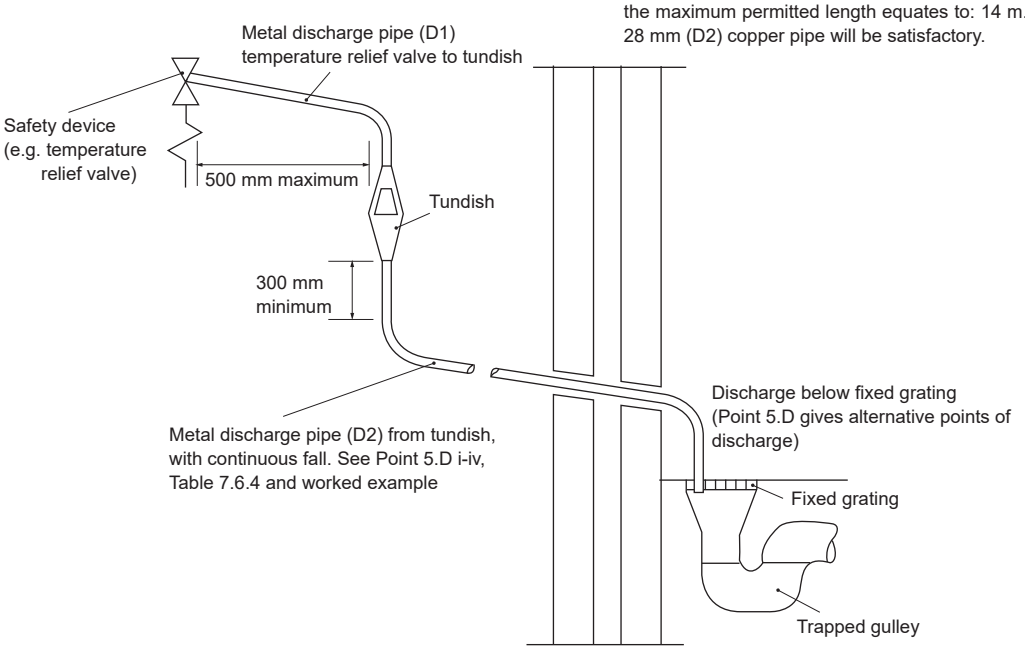


<Figure 7.6.7>

| Valve outlet size | Minimum size of discharge pipe D1 | Minimum size of discharge pipe D2 from tundish | Maximum resistance allowed, expressed as a length of straight pipe (no elbows or bends) | Resistance created by each elbow or bend |
|---|---|---|---|---|
| G 1/2 | 15 mm | 22 mm | Up to 9 m | 0.8 m |
| | | 28 mm | Up to 18 m | 1.0 m |
| | | 35 mm | Up to 27 m | 1.4 m |
| G 3/4 | 22 mm | 28 mm | Up to 9 m | 1.0 m |
| | | 35 mm | Up to 18 m | 1.4 m |
| | | 42 mm | Up to 27 m | 1.7 m |
| G1 | 28 mm | 35 mm | Up to 9 m | 1.4 m |
| | | 42 mm | Up to 18 m | 1.7 m |
| | | 54 mm | Up to 27 m | 2.3 m |

<Table 7.6.4>

### 7.6.7 Ambient Loop Pipe Work

#### ■ Pipework Connections

Connections to the heat pump unit should be made using the 22 mm compression as appropriate.
When connecting Ambient Loop pipes using compression fittings, insert copper liner for Ambient Loop pipe (accessory parts) into the pipes and tighten them from 0.75 to 1.25 turns.
Do not over-tighten compression fittings as this will lead to deformation of the olive ring and potential leaks.
**Note:**
**To weld the pipes in the field, cool the pipes on the heat pump unit using wet towel etc.**

#### ■ Side Connections

It is possible to angle the ambient loop connections, for connection to the side instead of top connection.
To angle out the connection:

1. Remove left side panel.
2. Cut the pipes to the desired length and angle the pipes in the desired direction.
3. Make a hole on the panel.
4. Fit the panel
5. Connect the pipes
6. Please fill in the gap between panel and ambient loop pipes with insulation

**Notes:**

- **For side connection, the pipe diameter is 22.2 mm.**
- **Triangle marks on left side panel shows center of ambient loop pipes.**
- **Noise from heat pump can be significant.**

#### ■ How to install PICV (Pressure Independent Control Valve)

PICV should be installed on the Ambient loop pipe in order to balance water or brine in Ambient loop.

#### ■ Insulation of Pipework

- All exposed ambient loop pipework should be insulated to prevent unnecessary heat loss and condensation. To prevent condensate entering the heat pump unit, the pipework and connections at the top of the heat pump unit should be carefully insulated.
- Ambient loop inlet and outlet pipework should not be run close together where possible, to avoid unwanted heat transfer.
- Pipework between Local System2 and heat pump unit should be insulated with suitable pipe insulation material with a thermal conductivity of ≤ 0.04 W/m.K.

#### ■ Filling the System (Ambient loop)

1. Check and charge expansion vessel.
   If expansion vessel is used, close the valve under the expansion vessel.
2. Check all connections including factory fitted ones are tight.
3. If you use filling pump, Connect the filling pump and return line on the ambient loop system's filler connector.
4. Insulate all exposed ambient loop pipework.
5. Thoroughly clean and flush, system of all debris. (see section 7.6.2 for instruction.)
6. Close the valve in the filler connector, open the valves on the filler connector.
7. Fill heat pump unit's ambient loop with suitable sanitary water or antifreeze solution mix.

| |
|---|
| When connecting metal pipes of different materials insulate the joints to prevent a corrosive reaction taking place which will damage the pipework. |

8. Check for leakages. If leakage is found, retighten the nut onto the connections.
9. Pressurise system to atmospheric pressure. Top up with water as necessary.
10. Close the valves on the filler connector, Open the three way valve in the filler connector.
11. If expansion vessel is used, open the valve under the expansion vessel.

| Ambient loop flow rate range [L/min] | 7.2 - 24.0 |
|---|---|

If the water or brine flow rate is less than 7.2 L/min, the flow rate error will be activated.

#### ■ Sizing Expansion Vessels

Expansion vessel volume must fit the local system water or brine volume. Refer to the 7.6.3 water pipe work for details

## 7.7 System Set Up

### 7.7.1 Main remote Controller Options

The heat pump unit comes factory fitted with a main remote controller. This incorporates a thermistor for temperature monitoring and a graphical user interface to enable set-up, view current status and input scheduling functions. The main remote controller is also used for servicing purposes. This facility is accessed via password protected service menus.
To provide the best efficiency Mitsubishi Electric recommends using automatic adaptation function based on room temperature. To use this function a room thermistor needs to be present in a main living area. This can be done in a number of ways the most convenient are detailed below.
**Refer to heating section of this manual for instructions on how to set compensation curve, Flow temp. or Room temp. (Auto adaptation).**
**For instructions on how to set the thermistor input for the FTC please refer to Initial settings section.**

The factory setting for space heating mode is pre-set to Room temp. mode (auto adaptation). If there is no room sensor present in the system, this setting must be changed to either Compensation curve mode or Flow temp. mode.

## ■ 1-zone temperature control

### Control option A

This option features the main remote controller and the Mitsubishi Electric wireless remote controller. The wireless remote controller is used to monitor room temperature and can be used to make changes to the space heating settings, boost DHW and switch to holiday mode without having to directly use the main remote controller.

If more than one wireless remote controller is used, the most recently requested temperature setting will commonly be applied to all rooms by the central control system regardless of which wireless remote controller was used. No hierarchy exists across these remote controllers.

Wire the wireless receiver to FTC referring to the wireless remote controller instruction manual. **Turn DIP SW1-8 to ON.** Before operation configure the wireless remote controller to transmit and receive data referring to the wireless remote controller installation manual.

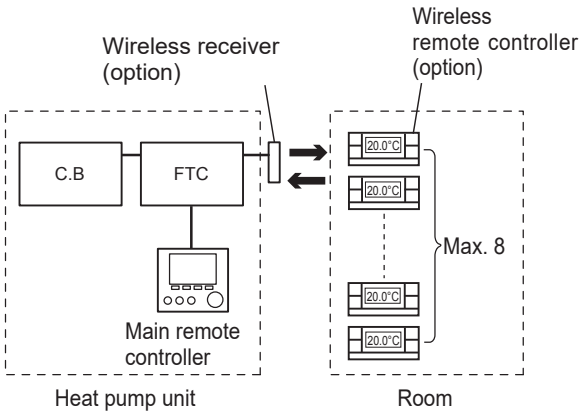


### Control option B

This option features the main remote controller and the Mitsubishi Electric thermistor wired to FTC. The thermistor is used to monitor room temperature but can not make any changes in control operation. Any changes to DHW must be made using the main remote controller mounted on the heat pump unit.

Wire the thermistor to the TH1 connector on FTC.
The number of room temperature thermistors that can be connected to FTC is always one.

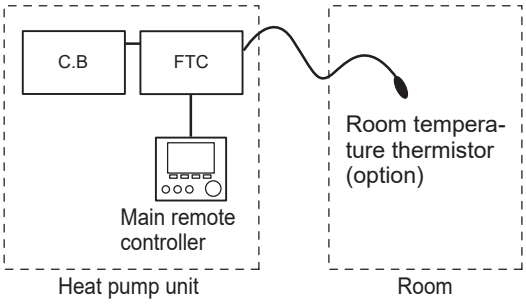


### Control option C

This option features the main remote controller being removed from the heat pump unit and situated in a different room. A thermistor built in the main remote controller can be used for monitoring the room temperature for Auto Adaptation function whilst keeping all its features of the main remote controller available.

The main remote controller and FTC are connected by a 2-core, 0.3 mm², non-polar cable (local supply) with a maximum length of 500 m.

To use the sensor in the main remote controller the main remote controller should come off from the heat pump unit. Otherwise it will detect the temperature of the heat pump unit instead of room temperature. This will affect the output of the space heating.

Note: Wiring for main remote controller cable shall be (5 cm or more) apart from power source wiring so that it is not influenced by electrical noise from power source wiring. (Do NOT insert main remote controller cable and power source wiring in the same conduit.)

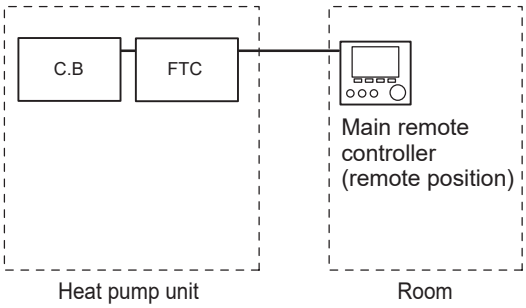


### Control option D

This option features the main remote controller and a locally supplied thermostat wired to FTC. The thermostat is used to set the maximum temperature for heating room. Any changes to DHW must be made using main remote controller mounted on the heat pump unit.
The thermostat is wired to IN1 in TBI.1 on FTC. The number of thermostats that can be connected to FTC is always one.

★ **The wireless remote controller can be also used as a thermostat.**

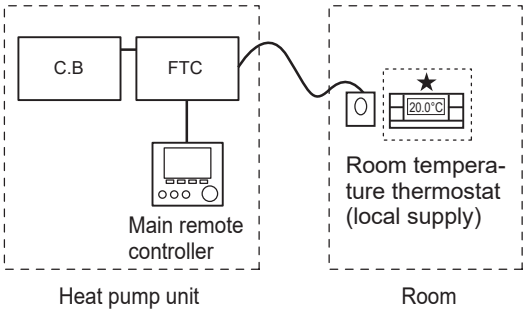

## ■ 2-zone temperature control

### Control option A

This option features the main remote controller, the Mitsubishi Electric wireless remote controller and a locally supplied thermostat. The wireless remote controller is used to monitor the Zone1 room temperature and the thermostat is used to monitor the Zone2 room temperature.
The thermostat can be also allocated to Zone1 and the wireless remote controller to Zone2.

The wireless remote controller can be also used to make changes to the space heating settings, boost DHW and switch to holiday mode without having to use the main remote controller.

If more than one wireless remote controller is used, the last temperature setting adjustment/demand will be applied to ALL rooms in same zone.

Wire the wireless receiver to FTC referring to the wireless remote controller instruction manual. Turn DIP SW1-8 to ON. Before operation configure the wireless remote controller to transmit and receive data referring to the wireless remote controller installation manual.
The thermostat is used to set the maximum temperature for heating Zone2 room.
The thermostat is wired to IN6 on FTC. (If the thermostat is allocated to Zone1, it is wired to IN1 on TBI.1.) (Refer to 7.4.2.)

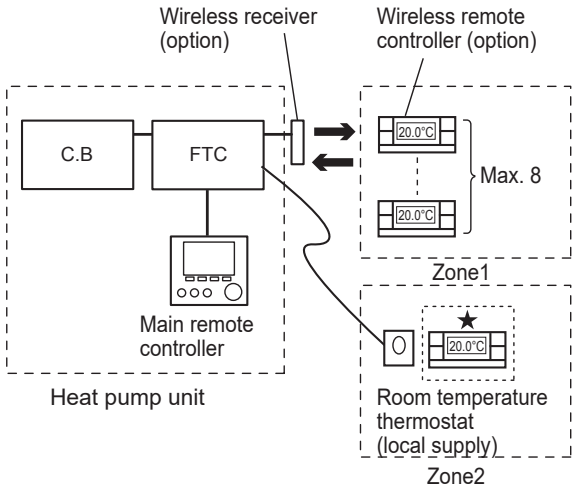


Zone1: Room temp. control (Auto adaptation)
Zone2: Compensation curve or flow temp. control

### Control option B

This option features the main remote controller, the Mitsubishi Electric thermistor and a locally supplied thermostat that are wired to FTC. The thermistor is used to monitor the Zone1 room temperature and the thermostat is used to control the Zone2 room temperature.

The thermostat can be also allocated to Zone1 and the thermistor to Zone2.
The thermistor can not make any changes in control operation. Any changes to DHW must be made using the main remote controller mounted on the heat pump unit.
Wire the thermistor to the TH1 connector on FTC.
The number of room temperature thermistors that can be connected to FTC is always one.
The thermostat is used to set the maximum temperature for heating Zone2 room.
The thermostat is wired to IN6 on FTC. (If the thermostat is allocated to Zone1, wire it to IN1 on TBI.1.) (Refer to 7.4.2.)

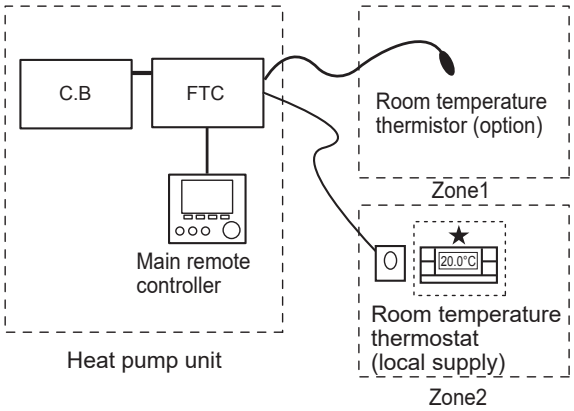


Zone1: Room temp. control (Auto adaptation)
Zone2: Compensation curve or flow temp. control

**Control option C**

This option features the main remote controller (with in-built thermistor) that is removed from the heat pump unit to monitor the Zone1 room temperature and a locally supplied thermostat to monitor the Zone2 room temperature.
The thermostat can be also allocated to Zone1 and the thermistor to Zone2.

A thermistor built into the main remote controller can be used for monitoring the room temperature for Auto Adaptation function whilst keeping all its features of the main remote controller available.
The main remote controller and FTC are connected by a 2-core, 0.3 mm², non-polar cable (local supply) with a maximum length of 500 m.
To use the sensor in the main remote controller the main remote controller should be detached from the heat pump unit. Otherwise it will detect the temperature of the heat pump unit instead of room temperature. This will affect the output of the space heating.

The thermostat is used to set the maximum temperature for heating Zone2 room.
The thermostat is wired to IN6 on FTC. (If the thermostat is allocated to Zone1, wire it to external input IN1 on TBI.1.) (Refer to 7.4.2.)

Note:
Wiring for main remote controller cable shall be (5 cm or more) apart from power source wiring so that it is not influenced by electrical noise from power source wiring. (Do NOT insert main remote controller cable and power source wiring in the same conduit.)

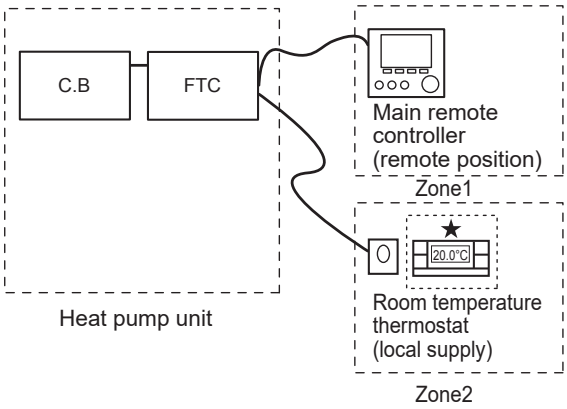


Zone1: Room temp. control (Auto adaptation)
Zone2: Compensation curve or flow temp. control

**Control option D**

This option features the locally supplied thermostats wired to FTC. The thermostats are individually allocated to Zone1 and Zone2. The thermostats are used to set each maximum temperature for heating Zone1 and Zone2 rooms. Any changes to DHW must be made using the main remote controller mounted on the heat pump unit.

The thermostat for Zone1 is wired to IN1 in TBI.1 on FTC.
The thermostat for Zone2 is wired to IN6 in TBI.1 on FTC.

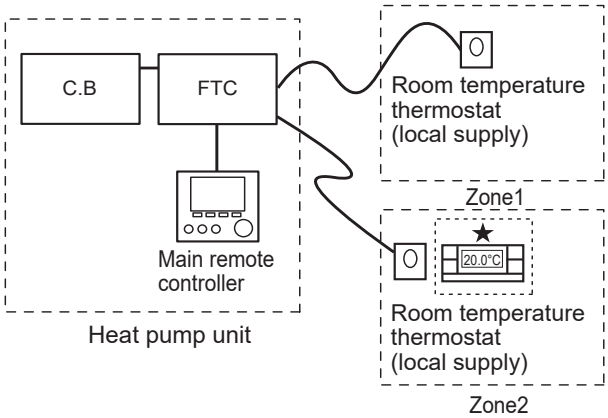


Zone1, Zone2: Compensation curve or flow temp. control

Note: For the options above, the sensor types can be exchanged between Zone1 and Zone2.
(e.g. Wireless remote controller in Zone1 and Room temp. thermostat in Zone2 can be changed to Room temp. thermostat and wireless remote controller, respectively).

★ **The wireless remote controller can be also used as a thermostat.**

### 7.7.2 Main remote controller

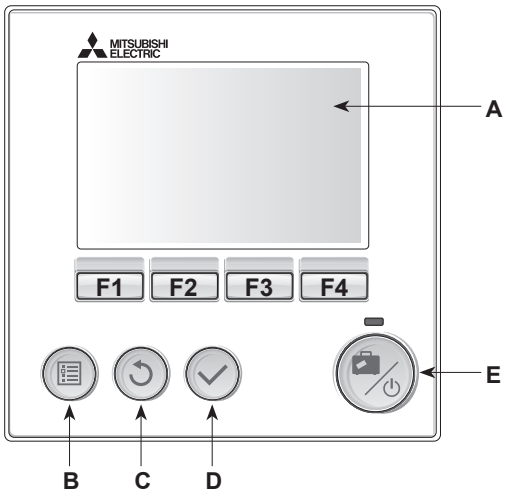


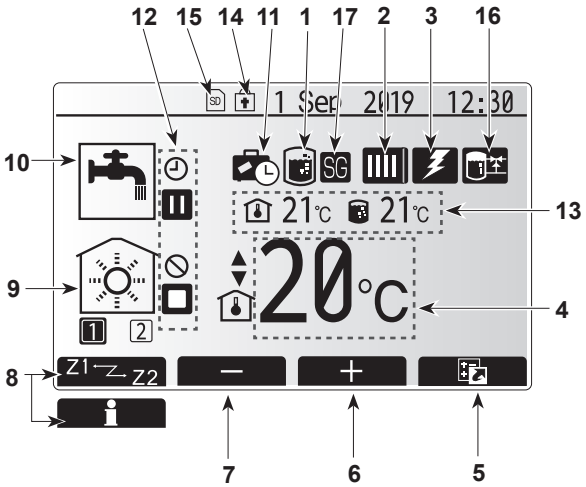


Main screen

**<Main remote controller parts>**

| Letter | Name | Function |
|---|---|---|
| A | Screen | Screen in which all information is displayed. |
| B | Menu | Access to system settings for initial set up and modifications. |
| C | Back | Return to previous menu. |
| D | Confirm | Used to select or save. (Enter key) |
| E | Power/ Holiday | If system is switched off pressing once will turn system on. Pressing again when system is switched on will enable Holiday Mode. Holding the button down for 3 seconds will turn the system off. (***1**) |
| F1-4 | Function keys | Used to scroll through menu and adjust settings. Function is determined by the menu screen visible on screen A. |

***1**
**When the system is switched off or the power supply is disconnected, the heat pump unit protection functions (e.g. freeze stat. function) will NOT operate. Please beware that without these safety functions enabled the heat pump unit may potentially become exposed to damage.**

**<Main screen icons>**

| | Icon | Description | |
|---|---|---|---|
| 1 | Legionella prevention | When this icon is displayed 'Legionella prevention mode' is active. | |
| 2 | Heat pump | | 'Heat pump' is running. |
| | | | Emergency heating |
| | | | 'Quiet mode' is activated. |
| 3 | Electric heater | When this icon is displayed the 'Electric heaters' (booster or immersion heater) are in use. | |
| 4 | Target temperature | | Target flow temperature |
| | | | Target room temperature |
| | | | Compensation curve |
| 5 | OPTION | Pressing the function button below this icon will display the option screen. | |
| 6 | + | Increase desired temperature. | |
| 7 | - | Decrease desired temperature. | |
| 8 | Z1⇄Z2 | Pressing the function button below this icon switches between Zone1 and Zone2. | |
| | Information | Pressing the function button below this icon displays the information screen. | |
| 9 | Space heating mode | | Heating mode Zone1 or Zone2 |
| 10 | DHW mode | Normal or Eco mode | |
| 11 | Holiday mode | When this icon is displayed 'Holiday mode' activated. | |
| 12 | | Timer | |
| | | Prohibited | |
| | | Server control | |
| | | Stand-by | |
| | | Stop | |
| | | Operating | |
| 13 | Current temperature | | Current room temperature |
| | | | Current water temperature of DHW tank |
| 14 | | The Menu button is locked or the switching of the operation modes between DHW and Heating operations are disabled in the Option screen. (***2**) | |
| 15 | | SD memory card is inserted. Normal operation. | |
| | | SD memory card is inserted. Abnormal operation. | |
| 16 | Buffer tank control | When this icon is displayed, 'Buffer tank control' is active. | |
| 17 | Smart grid ready | When this icon is displayed, 'Smart grid ready' is active. | |

***2 To lock or unlock the Menu, press the BACK and CONFIRM keys simultaneously for 3 seconds.**

## General Operation

In general operation the screen displayed on the main remote controller will be shown as in the figure on the right.
This screen shows the target temperature, space heating mode, DHW mode, any additional heat sources being used, holiday mode, and the date and time.

You should use the function buttons to access more information. When this screen is displayed pressing F1 will display the current status and pressing F4 will take the user to the option menu screen.

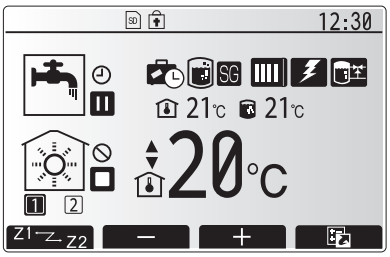

Home screen

**<Option screen>**
This screen shows the main operating modes of the system.
Use function buttons to switch between Operating (▶), Prohibited (⊘) and Timer (◷) for DHW and space heating, or detailed information on energy or capacity.

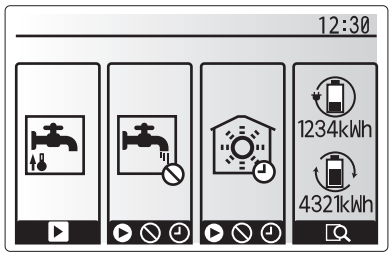

Option screen

The option screen allows quick setting of the following;
- Forced DHW — to turn ON/OFF press F1
- DHW operating mode — to change mode press F2
- Space heating operating mode — to change mode press F3
- Energy monitor
  Following accumulated energy values are displayed.
  : Consumed electrical energy in total (month-to-date)
  : Delivered heat energy in total (month-to-date)
  To monitor the energy values in each operation mode for [month-to-date/ last month/ the month before last/ year-to-date/ last year], press F4 to access to the Energy monitor menu.

**Note:**
**If a certain accuracy is required for the monitoring, the method to display captured data from external energy meter(s) should be set up. Contact your installer for further details.**

## Initial settings wizard

When the main remote controller is switched on for the first time, the screen automatically goes to Language setting screen, Date/Time setting screen and Main settings menu screen in order. Enter the desired number using the function keys and press CONFIRM.

**Note:**
<HEATER CAPACITY RESTRICTION>
This setting restricts the capacity of booster heater (if fitted). It is NOT possible to change the setting after starting up.
If you do not have any special requirements (such as building regulations) in your country, skip this setting (select "No").

- Hot water (DHW/Legionella)
- Heating
- Operation mode (ON/Prohibited/Timer)
- Pump speed
- Heat pump flow rate range
- Mixing valve control
- HEATER CAPACITY RESTRICTION

*1 The screen goes to the next setting screen. Changes have not been saved.

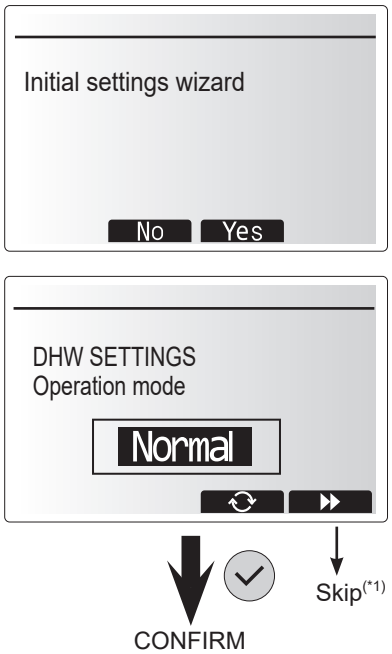

## ■ Main Settings Menu

The main settings menu can be accessed by pressing the MENU button. To reduce the risk of untrained end users altering the settings accidentally there are two access levels to the main settings; and the service section menu is password protected.

**User Level – Short press**

If the MENU button is pressed once for a short time the main settings will be displayed but without the edit function. This will enable the user to view current settings but **NOT** change the parameters.

**Installer Level – Long press**

If the MENU button is pressed down for 3 seconds the main settings will be displayed with all functionality available.
The colour of ◄► buttons is inverted, as per right figure.

The following items can be viewed and/or edited (dependent on access level).

- Domestic Hot water (DHW)
- Heating
- Schedule timer
- Holiday mode
- Initial settings
- Service (Password protected)

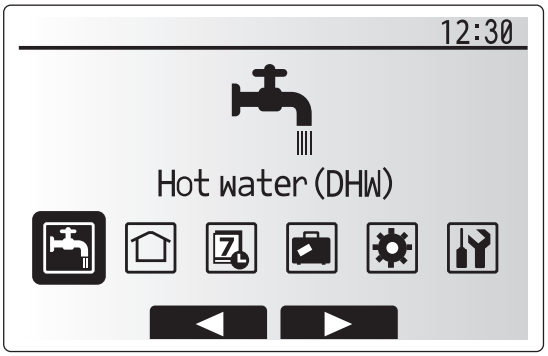


Main menu

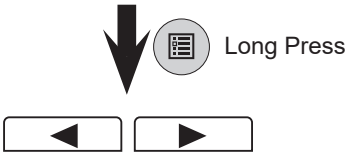


## Initial Settings

1. From the main settings menu use F2 and F3 buttons to highlight 'Initial settings' icon and select by pressing CONFIRM.
2. Use F1 and F2 buttons to scroll through the menu list. When the required title is highlighted then press CONFIRM to edit.
3. Use the relevant function buttons to edit each initial setting then press CONFIRM to save the setting.

Initial settings that can be edited are

- Date/Time *Be sure to set it to the local standard time.
- Language
- Summer time
- Temp. display
- Contact number
- Time display
- °C/°F
- Room sensor settings

To return to the main settings menu press the BACK button.

| Icon | Description |
|---|---|
| | Hot water (DHW) |
| | Heating |
| | Schedule timer |
| | Holiday mode |
| | Initial settings |
| | Service |

**<Room sensor settings>**

For room sensor settings it is important to choose the correct room sensor depending on the heating mode the system will operate in.

1. From the Initial settings menu select Room sensor settings.

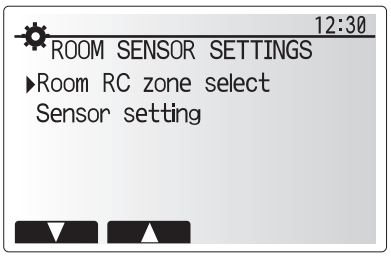


2. When 2-zone temperature control is active and wireless remote controllers are available, from Room RC zone select screen, select zone No. to assign to each remote controller.

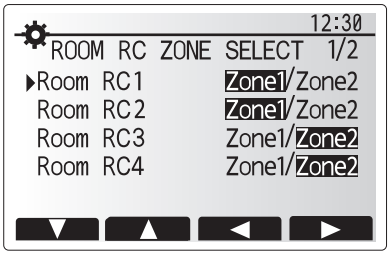


3. From Sensor setting screen, select a room sensor to be used for monitoring the room temperature from Zone1 and Zone2 separately.

| Control option ("Remote Controller Options" | Corresponding initial settings room sensor | |
|---|---|---|
| | Zone1 | Zone2 |
| A | Room RC1-8 (one each for Zone1 and Zone2) | * |
| B | TH1 | * |
| C | Main remote controller | * |
| D | * | * |

* Not specified ( if a field-supplied room thermostat is used)
Room RC1-8 (one each for Zone1 and Zone2) (if a wireless remote controller is used as a room thermostat)

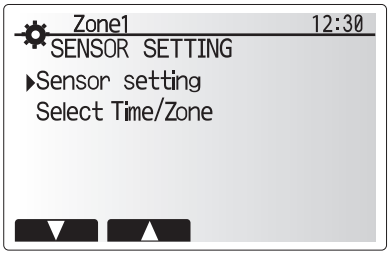


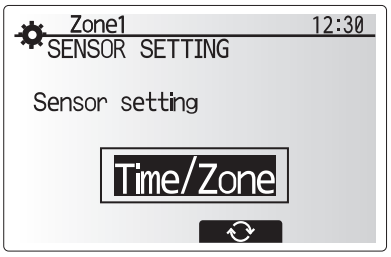


4. From Sensor setting screen, select Time/Zone to make it possible to use different room sensors according to the time schedule set in the Select Time/Zone menu. The room sensors can be switched up to 4 times within 24 hours.

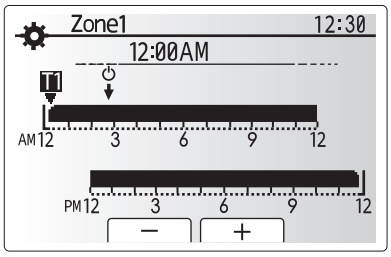


Time/Zone schedule setting screen

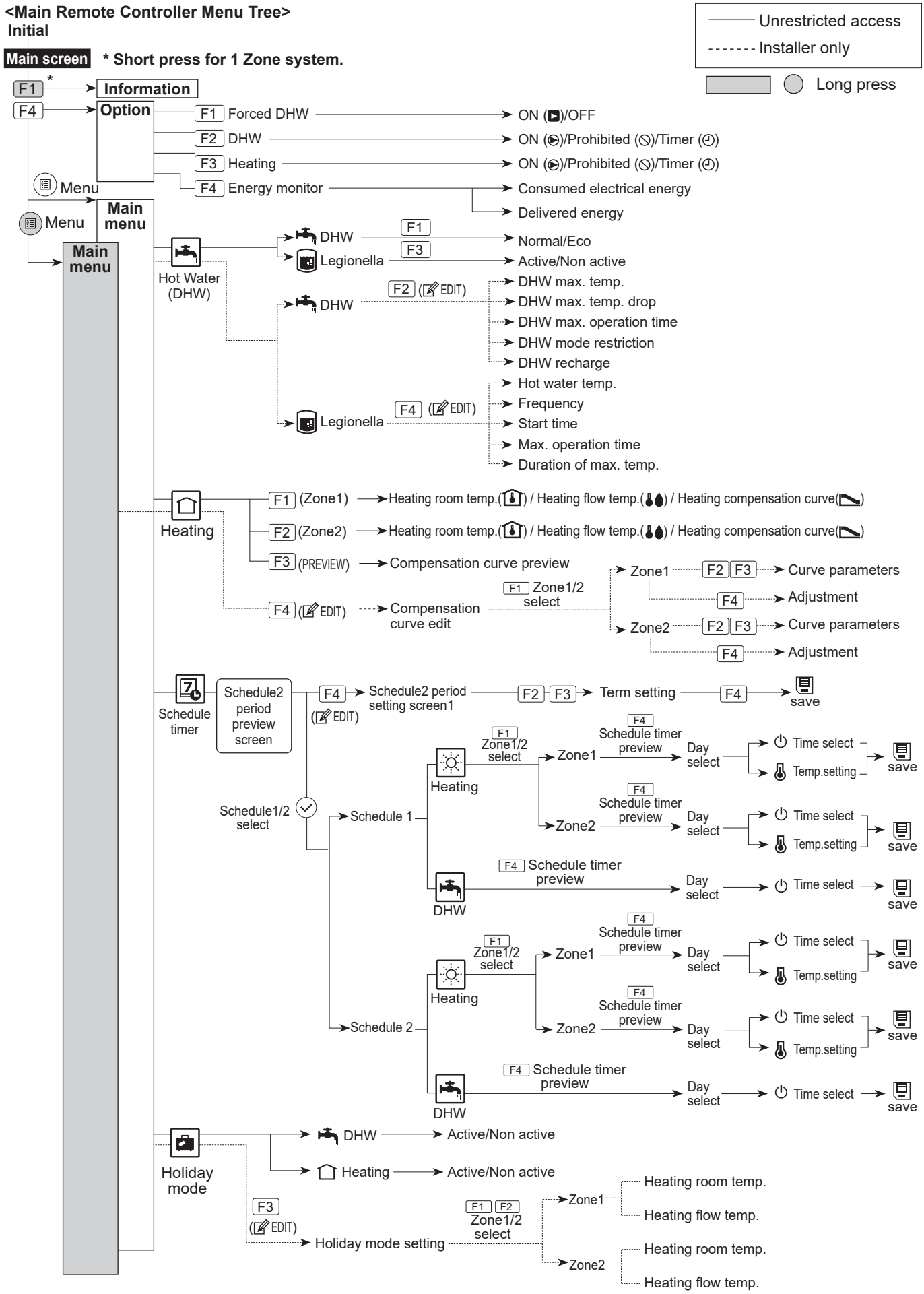


<Continued to next page.>

<Continued from the previous page.>

**<Main Remote Controller Menu Tree>**

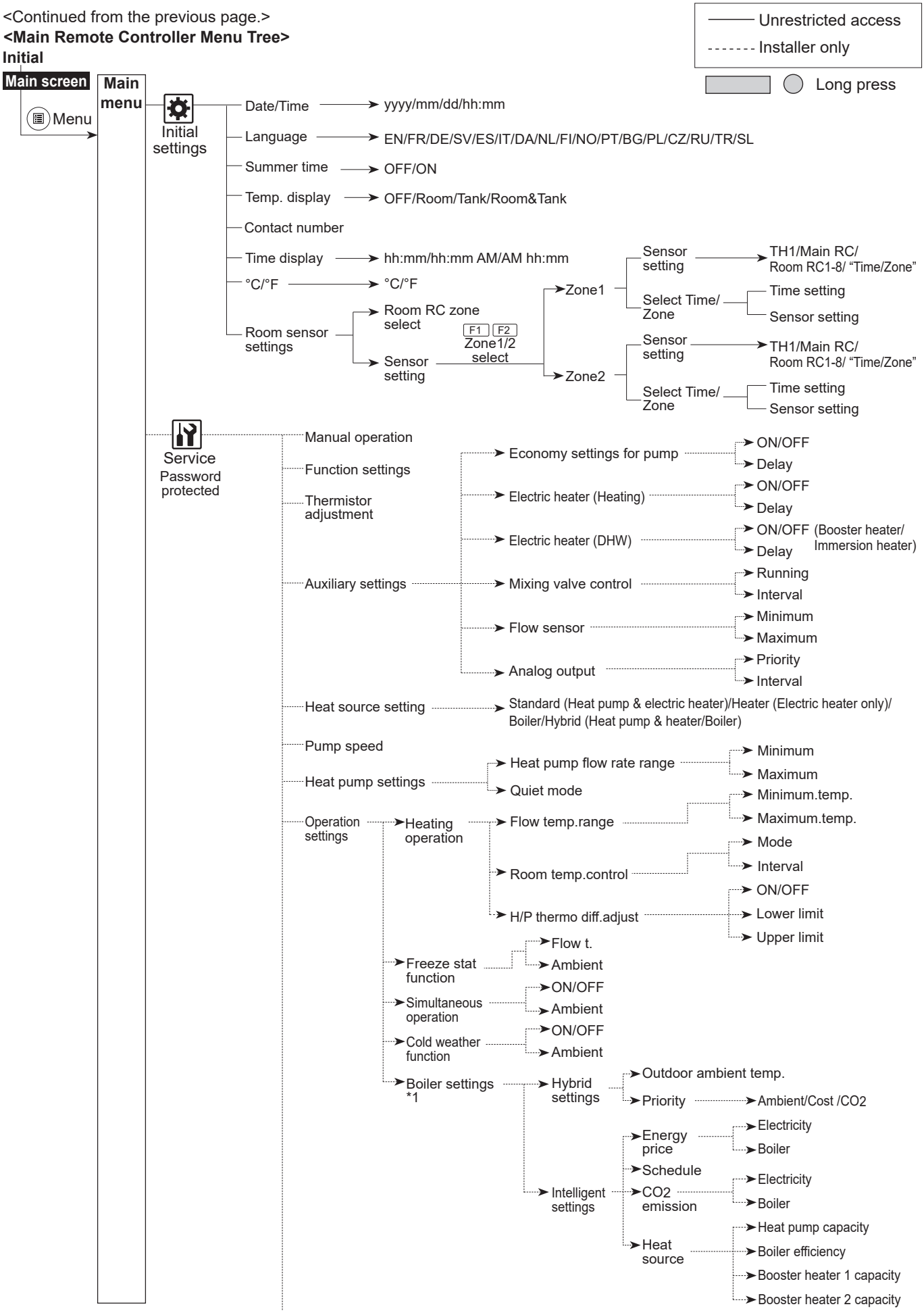


*1 For more details, refer to the installation manual of PAC-TH012HT-E.

<Continued from the previous page.>

**<Main Remote Controller Menu Tree>**

**Initial**

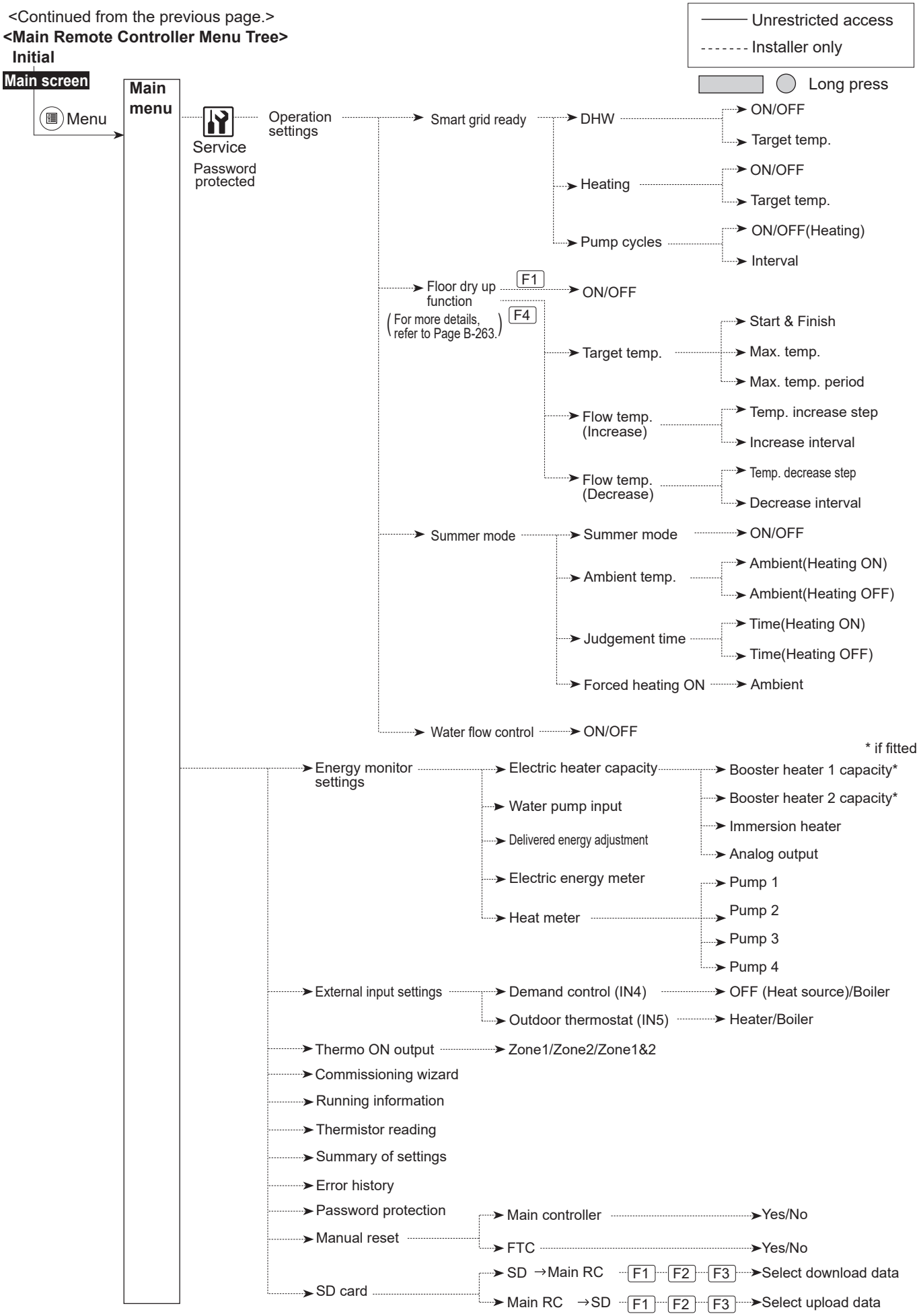

## Domestic Hot Water (DHW)/Legionella Prevention

The domestic hot water and legionella prevention menus control the operation of DHW tank heat ups.

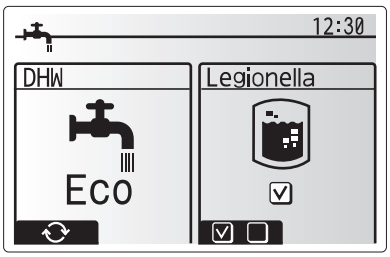


**<DHW mode settings>**

1. Highlight the hot water icon and press CONFIRM.
2. Use button F1 to switch between Normal and Eco heating modes.
3. To edit the mode, press down the MENU button for 3 seconds, then select "hot water".
4. Press F2 key to display the HOT WATER (DHW) SETTING menu.
5. Use F2 and F3 keys to scroll through the menu selecting each component in turn by pressing CONFIRM. See the table below for description of each setting.
6. Enter the desired number using the function keys and press CONFIRM.

| Menu subtitle | Function | Range | Unit | Default value |
|---|---|---|---|---|
| DHW max. temp. | Desired temperature of stored hot water | 40 - 60 | °C | 50 |
| DHW max. temp. drop | Difference in temperature between DHW max. temp. and the temperature at which DHW mode restarts | 5 - 30 | °C | 10 |
| DHW max. operation time | Max. time allowed for stored water heating DHW mode | 30 - 120 | min | 60 |
| DHW mode restriction | The time period after DHW mode when space heating has priority over DHW mode temporarily preventing further stored water heating (Only when DHW max. operation time has passed.) | 30 - 120 | min | 30 |

*** When the DHW max. temp is set over 55°C, the temperature at which DHW mode restarts must be less than 50°C to protect the device.**

**Explanation of DHW operation**

- When the DHW tank temperature drops from "DHW max. temp." by more than the "DHW max. temp. drop" (set by installer), DHW mode operates and the flow from the primary heating circuit is diverted to heat the water in the DHW tank.
- When the temperature of the stored water reaches the 'DHW max. temp.' set by the installer or if the 'DHW max. operation time' set by the installer is exceeded DHW mode ceases to operate.
- Whilst DHW mode is in operation primary hot water is not directed to the space heating circuit.
- Directly after DHW max. operation time 'DHW mode restriction' will routinely operate. The duration of this feature is set by the installer and during its operation, DHW mode can not (normally) be reactivated, allowing time for the system to deliver primary hot water to the space heating if required. However, if at this time there is no current demand for space heating, the system will automatically resume DHW mode. This will continue until it receives a demand for space heating.
- After the 'DHW mode restriction' operation the DHW mode can operate again and DHW tank heating will continue according to system demand.

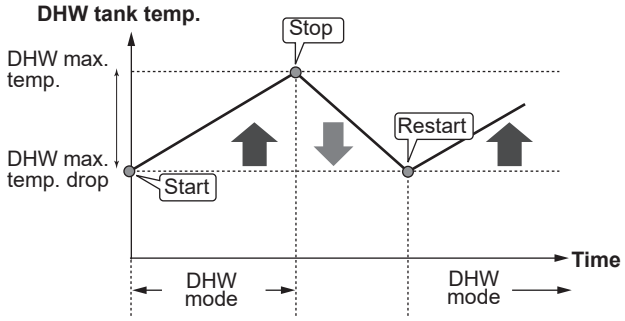


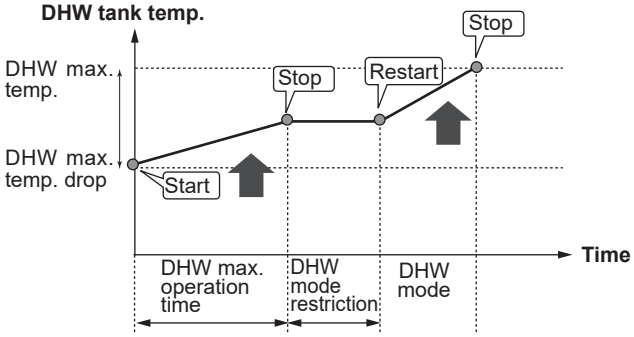


**<Eco mode>**

DHW mode can run in either 'Normal' or 'Eco' mode. Normal mode will heat the water in the DHW tank more quickly using the full power of the heat pump. Eco mode takes a little longer to heat the water in the DHW tank but the energy used is reduced. This is because heat pump operation is restricted using signals from the FTC based on measured DHW tank temperature.

**Note: The actual energy saved in Eco mode will vary according to underground temperature.**

**<DHW recharge>**

Select the amount of DHW. If you need much hot water, select LARGE.

Return to the DHW/legionella prevention menu.

**Note:**

**However, Large mode raises boiling-up frequency, resulting in increase in power consumption.**

## Forced DHW

The forced DHW function is used to force the system to operate in DHW mode. In normal operation the water in the DHW tank will be heated either to the target temperature or for the maximum DHW time, whichever occurs first. However should there be a high demand for hot water 'Forced DHW' function can be used to prevent the system from routinely switching to space heating and continue to provide DHW tank heating.

Forced DHW operation is activated by pressing button F1 and Back button in the 'Option Screen'. After DHW operation finishes, the system will automatically return to normal operation. To cancel forced DHW operation hold down button F1 in the 'Option Screen'.

## Legionella Prevention Mode settings (LP mode)

1. Use button F3 to choose legionella mode active YES/NO.
2. To edit the legionella function, press down the MENU button for 3 seconds and select “hot water”, then press F4 key.
3. Use F1 and F2 keys to scroll through the menu selecting each subtitle in turn by pressing CONFIRM. See the table below for description of each setting.
4. Enter the desired number using the function keys and press CONFIRM.

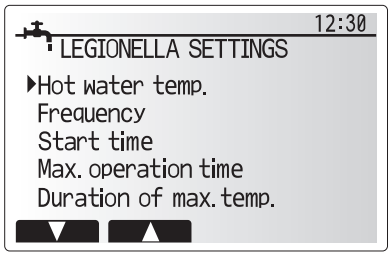


During Legionella Prevention Mode the temperature of the stored water is increased above 60°C to inhibit legionella bacterium growth. It is strongly recommended that this is done at regular intervals. Please check local regulations for the recommended frequency of heat ups.



| Menu subtitle | Function | Range | Unit | Default value |
|---|---|---|---|---|
| Hot water temp. | Desired temp of stored hot water | 60–70 | °C | 65 |
| Frequency | Time between LP mode DHW tank heat ups | 1–30 | day | 15 |
| Start time | Time when LP mode will begin | 0:00–23:00 | - | 03:00 |
| Max. operation time | Maximum time allowed for LP mode DHW tank heat | 1–5 | hour | 3 |
| Duration of max. temp. | The time period after LP mode max. water temp. has been reached | 1–120 | min | 30 |

**If you wish to make changes contact installer.**

**Explanation of Legionella Prevention Mode operation**

- At the time entered by the installer ‘Start time’ flow of useful heat from the system is diverted to heat the water in the DHW tank.
- When the temperature of the stored water exceeds the ‘Hot Water temp.’ set by the installer (above 65°C) primary circuit water is no longer diverted to heat the DHW tank.
- Whilst LP mode is in operation hot water is not directed to the space heating circuit.
- Directly after LP mode operation ‘Duration of max. temp.’ will operate. The duration of this feature is set by the installer and during its operation stored water temperature will be monitored.
- If stored water temperature should drop to LP restart temp., LP mode will restart and primary water flow from the heat source(s) will be directed to the DHW tank to boost the temperature. Once the set time for Duration of Max. temp. has passed LP mode will not recur for the set interval (set by installer).
- It is the responsibility of the installer to ensure the settings for legionella prevention are compliant with local and national guidelines.

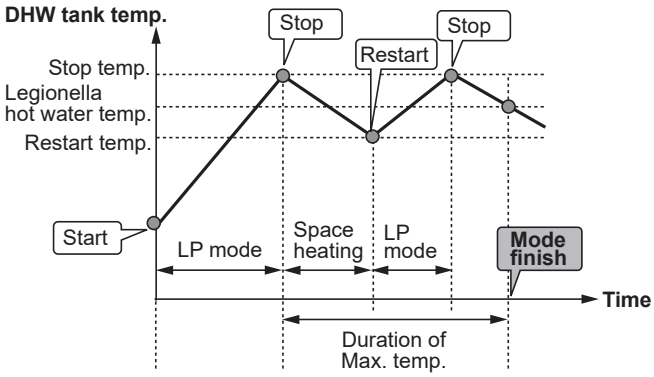


(LP mode: Legionella Prevention mode)

Please note that LP mode uses the assistance of electric heaters to supplement the energy input of the heat pump. Heating water for long periods of time is not efficient and will increase running costs. The installer should give careful consideration to the necessity of legionella prevention treatment whilst not wasting energy by heating the stored water for excessive time periods. The end user should understand the importance of this feature.
**ALWAYS COMPLY WITH LOCAL AND NATIONAL GUIDANCE FOR YOUR COUNTRY REGARDING LEGIONELLA PREVENTION.**

## Heating

The heating menus deal with space heating using normally either a radiator, fan-coil, or underfloor heating system depending on the installation.

There are 3 heating modes
- Heating room temp. (Auto adaptation) ( )
- Heating flow temp. ( )
- Heating compensation curve ( )

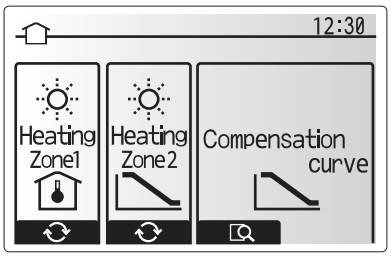


**<Room temp. (Auto adaptation) mode>**
In room temp. (Auto adaptation) mode the controller uses temperature sensors around the heating system to monitor space and flow temperatures. This data is regularly updated and compared to previous data by the controller to predict changes in room temperature and adjust the temperature of water flowing to the space heating circuit accordingly. By monitoring not only the outdoor ambient, but the room and heating circuit water temperatures, the heating is more consistent and sudden spikes in required heat output are reduced. This results in a lower overall flow temperature being required.

**<Flow temp. mode>**
The temperature of the water flowing to the heating circuit is set by the installer to best suit the space heating system design, and user's desired requirements.

**Explanation of compensation curve**
During late spring and summer usually the demand for space heating is reduced. To prevent the heat pump from producing excessive flow temperatures for the primary circuit the compensation curve mode can be used to maximise efficiency and reduce running costs.

The compensation curve is used to restrict the flow temperature of the primary space heating circuit dependent on the outdoor temperature. The FTC uses information from both an outdoor temperature sensor and a temperature sensor on the primary circuit supply to ensure the heat pump is not producing excessive flow temperatures if the weather conditions do not require it.

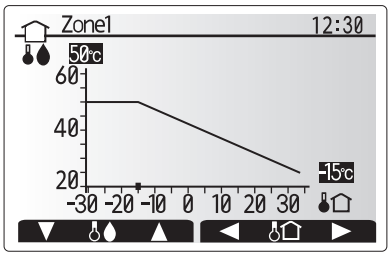


: Flow temp.
: Outdoor ambient temp.

Your installer will set the parameters of the graph depending on local conditions and type of space heating used in your home. It should not be necessary for you to alter these settings. If however you find that over a reasonable operating period the space heating is not heating or is overheating your home, please contact your installer so they can check your system for any problems and update these settings if necessary.

## Holiday Mode

Holiday mode can be used to keep the system running at lower flow temperatures and thus reduced power usage whilst the property is unoccupied. Holiday mode can run either flow temp., room temp., heating, compensation curve heating and DHW all at reduced flow temperatures to save energy if the occupier is absent.

From the main menu screen press button E should be pressed. Be careful not to hold down button E for too long as this will turn off the controller and system.

Once the holiday mode activation screen is displayed you can activate/deactivate and select the duration that you would like holiday mode to run for.

- Press button F1 to activate or deactivate holiday mode.
- Use buttons F2, F3 and F4 to input the date which you would like holiday mode to activate or deactivate holiday mode for space heating.

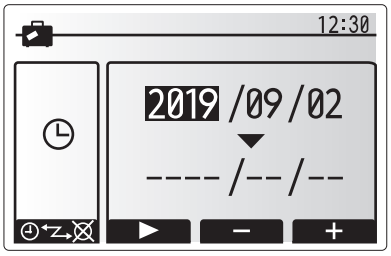


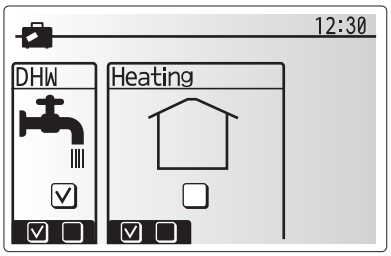


**<Editing holiday mode>**

Refer to the menu tree in “Main remote controller” of Installation Manual.

Should you require the Holiday mode settings e.g. the flow temp. or the room temp. to be altered you should contact your installer.

## Schedule timer

Scheduled timer can be set in two ways, for example; one for summer and the other for winter. (Refer to as “Schedule 1” and “Schedule 2” respectively.) Once the term (months) for the Schedule 2 is specified, rest of the term will be specified as Schedule 1. In each Schedule, an operational pattern of modes (Heating) can be set. If no operational pattern is set for Schedule2, only the pattern for Schedule 1 will be valid. If Schedule 2 is set to full-year (i.e. March to Feb.), only the operational pattern for Schedule 2 will be valid.

**The schedule timer is activated or deactivated in the option screen. (See ‘General Operation’ section)**

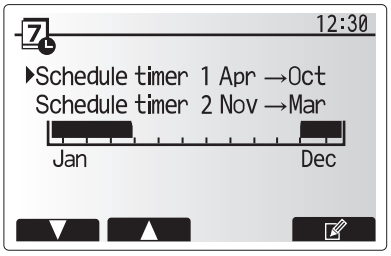


Schedule2 period preview screen

**<Setting the Schedule period>**

1. From the main settings menu use F2 and F3 to highlight the schedule icon then press CONFIRM.
2. The Schedule period preview screen is displayed.
3. To change the Schedule period, press F4. button.
4. The time bar edit screen is displayed.
5. Use F2/F3 button to point at a starting month of the Schedule2, then press CONFIRM.
6. Use F2/F3 button to point at an ending month of the Schedule2, then press CONFIRM.
7. Press F4 to save settings.

**<Setting the Schedule timer>**

1. From the main settings menu use F2 and F3 to highlight the schedule icon then press CONFIRM.
2. From the schedule 2 period preview screen use F1 and F2 to scroll through the selecting each subtitle in turn by pressing CONFIRM.
3. The schedule timer sub menu will be displayed. The icons show the following modes;
   - Heating
   - DHW
4. Use F2 and F3 buttons to move between mode icons press CONFIRM to be shown the PREVIEW screen for each mode.

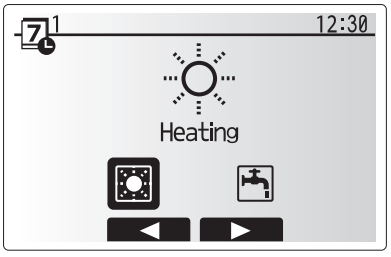


Schedule1 mode select screen

The preview screen allows you to view the current settings. Days of the week are displayed across the top of the screen. Where day appears underlined the settings are the same for all those days underlined.
Hours of the day and night are represented as a bar across the main part of the screen. Where the bar is solid black, space heating is allowed.

5. In the preview menu screen press F4 button.

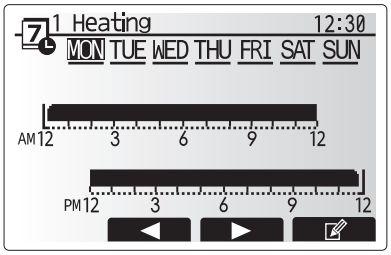


Preview screen

6. First select the days of the week you wish to schedule.
7. Press F2/F3 buttons to move between days and F1 to check or uncheck the box.
8. When you have selected the days press CONFIRM.

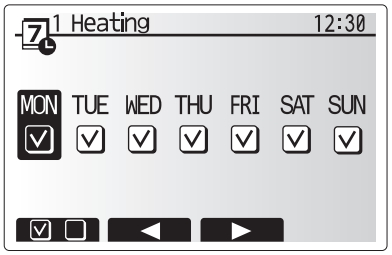


Day of week select screen

9. The time bar edit screen will be displayed.
10. Use buttons F2/F3 to move to the point at which you do not want the selected mode to be active press CONFIRM to start.
11. Use F3 button to set the required time of inactivity then press CONFIRM.
12. You can add up to 4 periods of inactivity within a 24 hour interval.

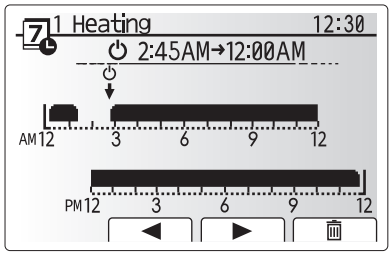


Time of period setting screen 1

13. Press F4 to save settings.

When scheduling heating, button F1 changes the scheduled variable between time and temperature. This enables a lower temperature to be set for a number of hours e.g. a lower temperature may be required at night when the occupants are sleeping.

**Note:**
- **The schedule timer for space heating is set in the same way.**
- **A small rubbish bin character is also displayed choosing this icon will delete the last unsaved action.**
- **It is necessary to use the SAVE function F4 button to save settings. CONFIRM does NOT act as SAVE for this menu.**

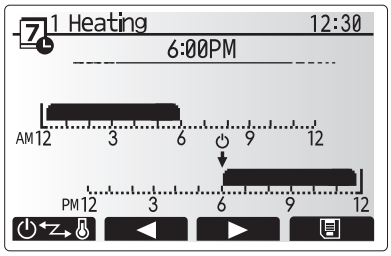


Time of period setting screen 2

## Service Menu

The service menu provides functions for use by installer or service engineer. It is NOT intended the home owner alters settings within this menu. It is for this reason password protection is required to prevent unauthorised access to the service settings.

The factory default password is "0000".
Follow the procedure described in General Operation for the set up operation.

The service menu is navigated using the F1 and F2 buttons to scroll through the functions. The menu is split across two screens and is comprised of the following functions;

1. Manual operation
2. Function settings
3. Thermistor adjustment
4. Auxiliary settings
5. Heat source setting
6. Pump speed
7. Heat pump settings
8. Operation settings
9. Energy monitor settings
10. External input settings
11. Thermo ON output
12. Commissioning wizard
13. Running information
14. Thermistor reading
15. Summary of settings
16. Error history
17. Password protection
18. Manual reset
19. SD card

In this Installation Manual, instructions will be given only for the following functions;

1. Manual operation
2. Auxiliary settings
3. Heat source setting
4. Operation settings
5. Energy monitor settings
6. External input settings
7. Password protection
8. Manual reset

Information on the other functions can be found by consulting the service manual.

Many functions can not be set whilst the heat pump unit is running. The installer should turn off the unit before trying to set these functions. If the installer attempts to change the settings whilst the unit is running the main remote controller will display a reminder message prompting the installer to stop operation before continuing. By selecting “Yes” the unit will cease operation.

**<Manual operation>**

During the filling of the system the water circulation pump and 3-way valve can be manually overridden using manual operation mode.
When manual operation is selected a small timer icon appears in the screen.
The function selected will only remain in manual operation for a maximum of 2 hours. This is to prevent accidental permanent override of the FTC.

►Example
Pressing F3 button will switch manual operation mode ON for the main 3-way valve. When filling of the DHW tank is complete the installer should access this menu again and press F3 to deactivate manual operation of the part.
Alternatively after 2 hours manual operation mode will no longer be active and FTC will resume control of the part.

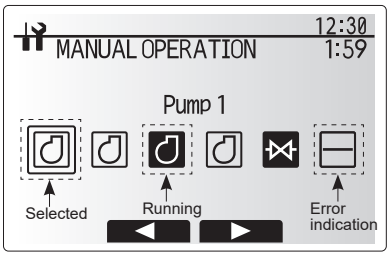

Manual operation menu screen

Manual operation and heat source setting can not be selected if the system is running. A screen will be displayed asking the installer to stop the system before these modes can be activated.
The system automatically stops 2 hours after last operation.

### <Auxiliary settings>

This function is used to set the parameters for any auxiliary parts used in the system

| Menu subtitle | | Function/ Description |
|---|---|---|
| Economy settings for pump | | Water pump stops automatically a specified period of time from when operation is finished. |
| | Delay | Time before pump switches off*1 |
| Electric heater (Heating) | | To select "WITH booster heater (ON)" or "WITHOUT booster heater (OFF)" in Heating mode. |
| | Delay | The minimum time required for the booster heater to turn ON after Heating mode has started. |
| Electric heater (DHW) | | To select "WITH (ON)" or "WITHOUT (OFF)" booster heater or immersion heater individually in DHW mode. |
| | Delay | The minimum time required for the booster heater or immersion heater to turn ON from after DHW mode has started. (This setting is applied for both booster and immersion heater.) |
| Mixing valve control *2 | Running | Period from valve fully open (at a hot water mixing ratio of 100%) to valve fully closed (at a cold water mixing ratio of 100%) |
| | Interval | Interval (min) to control the mixing valve. |
| Flow sensor *3 | Minimum | The minimum flow rate to be detected at flow sensor. |
| | Maximum | The maximum flow rate to be detected at flow sensor. |

*1. Decreasing "time before pump switched off" may increase the duration of stand-by in heating mode.
*2. Set the running time according to the specifications of the actuator of each mixing valve.
It is recommended to set the interval to 2 minutes that is a default value. With the interval set longer, it could take longer to warm up a room.
*3. Do not change the setting since it is set according to the specification of flow sensor attached to the heat pump unit.

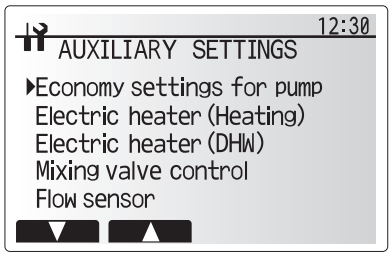

Auxiliary settings menu screen

### <Heat source setting>

The default heat source setting is heat pump and all electric heaters present in the system to be operational. This is referred to as standard operation on the menu.

### <Operation settings>

**Heating operation**

This function allows operational setting of flow temperature range from the heat pump unit and also the time interval at which the FTC collects and processes data for the auto adaptation mode.

| Menu subtitle | | Function | Range | Unit | Default |
|---|---|---|---|---|---|
| Flow temp. range | Minimum temp. | To minimize the loss by frequent ON and OFF in mild outdoor ambient temperature seasons. | 20 to 45 | ºC | 30 |
| | Maximum temp. | To set max. possible flow temperature according to the type of heat emitters. | 35 to 60 | ºC | 50 |
| Room temp. control | Mode | Setting for Room temp. control<br>At Fast mode, target outlet water temperature is set higher than the one set at normal mode. This reduces the time to reach the target room temperature when the room temperature is relatively low.* | Normal/ Fast | — | Normal |
| | Interval | Selectable according to the heat emitter type and the materials of floor (i.e. radiators, floor heating-thick, -thin concrete, wood, etc.) | 10 to 60 | min | 10 |
| Heat pump thermo diff. adjust | On/Off | To minimize the loss by frequent ON and OFF in mild outdoor ambient temperature seasons. | On/Off | — | On |
| | Lower limit | Prohibits heat pump operation until the flow temperature drops below the target flow temperature plus lower limit value. | −9 to −1 | ºC | −5 |
| | Upper limit | Allows heat pump operation until the flow temperature rises above the target flow temperature plus upper limit value. | +3 to +5 | ºC | +5 |

**Note:**
1. The minimum flow temperature that prohibits heat pump operation is 20ºC.
2. The maximum flow temperature that allows heat pump operation equals to the maximum temperature set in the Flow temp. range menu.

* Fast mode is not efficient and will increase running cost when compared to normal mode.

**Freeze stat function**

| Menu subtitle | | Function/ Description |
|---|---|---|
| Freeze stat function *1 | | An operational function to prevent the water circuit from freezing when outdoor ambient temperature drops. |
| | Flow t. | The target outlet water temperature at water circuit when operating in Freeze stat function. *2 |
| | Outdoor ambient temp. | Minimum outdoor ambient temperature which freeze stat function will begin to operate, (3 - 20ºC) or choose**. If asterisk (**) is chosen freeze stat function is deactivated. (i.e. primary water freeze risk)" |

*1 When the system is turned off, freeze stat function is not enabled.
*2 Flow t. is fixed to 20ºC and unchangeable.

**Simultaneous Operation**

For periods of very low outside temperature this mode can be used. Simultaneous operation allows both DHW and space heating to run together by using the heat pump and/or booster heater (if present) to provide space heating whilst only the immersion heater provides heating for DHW. This operation is only available if BOTH a DHW tank AND immersion heater are present on the system.*

- Range of outdoor ambient temperature at which simultaneous operation starts is −30°C to 10°C (default −15°C).
- System shall automatically return to routine operation. This will happen when the outdoor ambient temperature rises above the selected temperature for this specific mode of operation.

**Cold weather function**

For extremely low outdoor ambient temperature conditions when the heat pump's capacity is restricted the provision of DHW is supported by the immersion heater,where fitted.
The support of both space heating and DHW can only be provided if the heat pump unit is also fitted with an electrical booster heater.

- Range of outdoor ambient temperature at which cold weather function starts is −30°C to −10°C (default −15°C).
- System shall automatically return to routine operation. This will happen when the outdoor temperature rises above the selected temp. for this specific mode of operation.

Note:
Electrical booster is only applicable to some modules.

**Smart grid ready**

In DHW or heating operation, the commands in the table below can be used.

| IN11 | IN12 | Meaning |
|---|---|---|
| OFF (open) | OFF (open) | Normal operation |
| ON (short) | OFF (open) | Switch-on recommendation |
| OFF (open) | ON (short) | Switch-off command |
| ON (short) | ON (short) | Switch-on command |

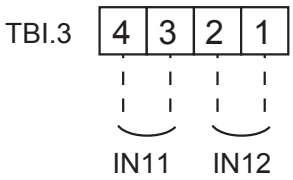


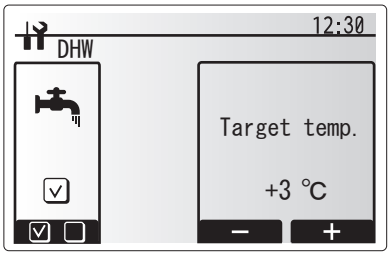


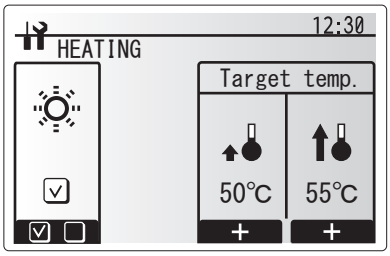

**Floor dry up function**

The Floor dry up function automatically changes the target hot water temperature in stages to gradually dry concrete when this particular type of underfloor heating system is installed.

Upon completion of the operation the system stops all the operations except the Freeze stat. operation.
For Floor dry up function, the target flow temp. of Zone1 is the same as that of Zone2.

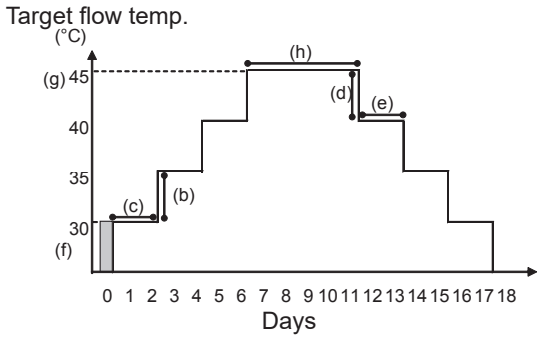


Disconnect wiring to external inputs of room thermostat, demand control, and outdoor thermostat, or the target flow temperature may not be maintained.

| Functions | | Symbol | Description | Option/ Range | Unit | Default |
|---|---|---|---|---|---|---|
| Floor dry up function | | a | Set the function to ON and power on the system using the main remote controller, and the dry up heating operation will start. | On/Off | — | Off |
| Flow temp. (increase) | Flow temp. increase step | b | Sets the increase step of the target flow temperature. | +1 to +10 | ºC | +5 |
| | Increase interval | c | Sets the period for which the same target flow temperature is maintained. | 1 to 7 | day | 2 |
| Flow temp. (decrease) | Flow temp. decrease step | d | Sets the decrease step of the target flow temperature. | −1 to −10 | ºC | −5 |
| | Decrease interval | e | Sets the period for which the same target flow temperature is maintained. | 1 to 7 | day | 2 |
| Target temperature | Start & Finish | f | Sets the target flow temperature at the start and the finish of the operation. | 20 to 60 | ºC | 30 |
| | Max. target temp. | g | Sets the maximum target flow temperature. | 20 to 60 | ºC | 45 |
| | Max. temp. period | h | Sets the period for which the maximum target flow temperature is maintained. | 1 to 20 | day | 5 |

**<Energy monitor settings>**

1. General description

End user can monitor accumulated(*1) 'Consumed electrical energy' and 'Delivered heat energy' in each operation mode(*2) on the main remote controller.

*1 Monthly and Year to date

*2 - DHW operation
- Space heating

Refer to the menu tree in "Main Settings Menu" for how to check the energy, and "7.3 DIP switch functions" for the details on DIP-SW setting.

Either one of the following 2 methods is used for monitoring.

**Note: Method 1 should be used as a guide. If a certain accuracy is required, the 2nd method should be used.**

(1) Calculation internally

Electricity consumption is calculated internally based on the energy consumption of refrigerant and brine circuit, electric heater, water pump(s) and other auxiliaries.*3

Delivered heat is calculated internally by multiplying delta T (Flow and Return temp.) and flow rate measured by the factory fitted sensors.

Set the electric heater capacity and water pump(s) input and specs of additional pump(s) supplied locally. (Refer to the menu tree in "Main Settings Menu")

| | Immersion heater | Pump1 *1 | Pump2 | Pump3 |
|---|---|---|---|---|
| EHWT17D-MHEDW | 3 kW | ***(factory fitted pump) | When additional pumps supplied locally are connected as Pump 2/3, change setting according to specs of the pumps. | |

*1 "***" displayed in the energy monitor setting mode means the factory fitted pump is connected as Pump 1 so that the input is automatically calculated.

When anti-freeze solution (propylene glycol) is used for primary water circuit, set the delivered energy adjustment if necessary.
For further detail of above, refer to the menu tree in "Main Settings Menu".

(2) Actual measurement by external meter (locally supplied)
FTC has external input terminals for 2 'Electric energy meters' and a 'Heat meter'.
If two 'Electric energy meters' are connected, the 2 recorded values will be combined at the FTC and shown on the main remote controller.
(e.g. Meter 1 for H/P power line, Meter 2 for heater power line)
Refer to the [Signal inputs] in section "7.2 Wiring diagrams" for more information on connectable electric energy meter and heat meter.

● Connectable electric energy meter and heat meter

| | | | | | | |
|---|---|---|---|---|---|---|
| ▪ Pulse meter type | Voltage free contact for 12VDC detection by FTC (TBI.2 1pin, TBI.3 5 and 7 pins have a positive voltage.) | | | | | |
| ▪ Pulse duration | Minimum ON time: 40 ms<br>Minimum OFF time: 100 ms | | | | | |
| ▪ Possible unit of pulse | 0.1 | pulse/kWh | 1 | pulse/kWh | 10 | pulse/kWh |
| | 100 | pulse/kWh | 1000 | pulse/kWh | | |

Those values can be set by the main remote controller. (Refer to the menu tree in "Main Settings Menu".)



### <External input settings>

**Demand control (IN4)**

The selection of "OFF", whilst a signal is being sent to IN4, forcefully stops all the heat source operations and the selection of "Boiler" stops operations of heat pump and electric heater and performs boiler operation.

**Outdoor thermostat (IN5)**

The selection of "Heater", whilst a signal is being sent to IN5, performs electric-heater-only operation and the selection of "Boiler" performs boiler operation.

### <Password protection>

Password protection is available to prevent unauthorised access to the service menu by untrained persons.

**Resetting the password**

If you forget the password you entered, or have to service a unit somebody else installed, you can reset the password to the factory default of **0000**.

1. From the main settings menu scroll down the functions until Service Menu is highlighted.
2. Press CONFIRM.
3. You will be prompted to enter a password.
4. Hold down buttons F3 and F4 together for 3 seconds
5. You will be asked if you wish to continue and reset the password to default setting.
6. To reset press button F3.
7. The password is now reset to **0000**.

Password input screen

Password verify screen

### <Manual reset>

Should you wish to restore the factory settings at any time you should use the manual reset function. Please note this will reset ALL functions to the factory default settings.

### 7.7.3 DIP Switch Function

Located on the C.B. printed circuit board are 7 sets of small white switches known as DIP switches. The DIP switch number is printed on the circuit board next to the relevant switches. The word ON is printed on the circuit board and on the DIP switch block itself. To move the switch you will need to use a pin or the corner of a thin metal ruler or similar.

DIP switch settings are listed below in Table 7.7.1.
Only an authorised installer can change DIP switch setting under one's own responsibility according to the installation condition. Make sure to turn off heat pump unit power supplies before changing the switch settings.

| DIP switch | | Function | OFF | ON | Effective timing | Default settings |
|---|---|---|---|---|---|---|
| SW1 | SW1-1 | — | — | — | — | OFF |
| | SW1-2 | Abnormal history clear | Normal | Clear | Always | OFF |
| SW4 | SW4-1 | — | — | — | — | OFF |
| | SW4-2 | — | — | — | — | OFF |
| SW5 | SW5-1 | — | — | — | — | OFF |
| | SW5-2 | Power failure automatic recovery*1 | No auto recovery | Auto recovery | When power supply ON | ON |
| | SW5-3 | — | — | — | — | OFF |
| | SW5-4 | — | — | — | — | OFF |
| | SW5-5 | — | — | — | — | OFF |
| | SW5-6 | — | — | — | — | OFF |
| SW6 | SW6-1 | — | — | — | — | OFF |
| | SW6-2 | — | — | — | — | OFF |
| | SW6-3 | — | — | — | — | OFF |
| | SW6-4 | Model select | Heat pump setting | | — | OFF |
| | SW6-5 | | | | | ON |
| | SW6-6 | | | | | OFF |
| | SW6-7 | | | | | ON |
| | SW6-8 | | | | | OFF |
| SW7 *2 | SW7-1 | — | — | — | — | OFF |
| | SW7-2 | — | — | — | — | OFF |
| | SW7-3 | — | — | — | — | OFF |
| | SW7-4 | — | — | — | — | OFF |
| | SW7-5 | — | — | — | — | OFF |
| | SW7-6 | — | — | — | — | OFF |
| SW8 | SW8-1 | — | — | | — | OFF |
| | SW8-2 | — | — | — | — | OFF |
| | SW8-3 | — | — | — | — | OFF |
| SW9 | SW9-1 | — | — | | Always | OFF |
| | SW9-2 | | | | | OFF |
| | SW9-3 | | | | | OFF |
| | SW9-4 | | | | | OFF |

<Table 7.7.1>

**Note:**

***1 "Power failure automatic recovery" can be set by either remote controller or this DIP SW. If one of them is set to ON, "Auto recovery" activates.**

***2 Please do not use SW7-3, 4 usually. Trouble might be caused by the usage condition.**

### 7.7.4 Connecting inputs/outputs

#### ■ Inputs/Outputs

| Name | Connector | Item |
|---|---|---|
| MC | TB-U/V/W | Motor for compressor (Mediate Power board) |
| 63H | 63H | High Pressure switch |
| 63HS | 63HS | High Pressure Sensor |
| FS | 63L | Flow switch (Ambient loop) |
| TH3 | TH3 | Thermistor (Ref. liquid temp.) |
| TH4 | TH4 | Thermistor (Discharge temp.) |
| TH7 | TH7/6 | Thermistor (Outdoor temp.) |
| TH8 | CN6 | Thermistor (Heat sink temp.) |
| TH32 | TH32 | Thermistor (Ambient loop inlet temp.) |
| TH33 | TH33 | Thermistor (Comp. surface temp.) |
| TH34 | TH34 | Thermistor (Ambient loop outlet temp.) |
| LEV-A | LEV-A | Linear Expansion Valve |
| CNM | CNM | Connection for option |

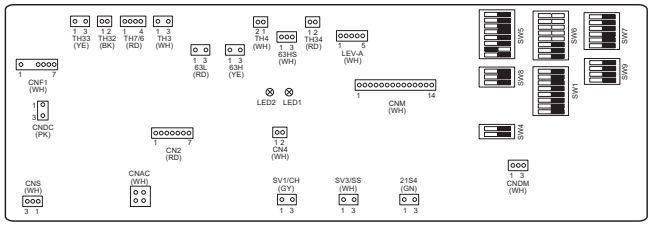

## 7.8 Service and Maintenance

The heat pump unit must be serviced once a year by a qualified individual. Servicing and maintenance of the outdoor unit should only be done by a Mitsubishi Electric trained technician with relevant qualifications and experience. Any electrical work should be done by a trades person with the appropriate electrical qualifica-tions. Any maintenance or 'DIY' fixes done by a non-accredited person could invalidate the Warranty and/or result in damage to the heat pump unit and injury to the per-son.

### ■ Basic Troubleshooting

| No. | Fault symptom | Possible cause | Explanation - Solution |
|---|---|---|---|
| 1 | Main remote controller display is blank. | 1. There is no power supply to main remote controller.<br><br>2. Power is supplied to main remote controller, however, the display on the main remote controller does not appear. | 1. Check LED2 on FTC. (See "5. WIRING DIAGRAM".)<br>(i) When LED2 is lit.<br>Check for damage or contact failure of the main remote controller wiring.<br>(ii) When LED2 is blinking.<br>Refer to No. 5 below.<br>(iii) When LED2 is not lit.<br>Refer to No. 4 below.<br>2. Check the following:<br>• Disconnection between the main remote controller cable and the FTC control board<br>• Failure of the main remote controller if "Please Wait" is not displayed.<br>• Refer to No. 2 below if "Please Wait" is displayed. |
| 2 | "Please Wait" remains displayed on the main remote controller. | 1. "Please Wait" is displayed for up to 6 minutes.<br>2. Communication failure between the main remote controller and FTC<br>3. Communication failure between FTC and controller circuit board | 1. Normal operation<br>2, Main remote controller start up checks/procedure.<br>3. (i) If "0%" or "50–99%" is displayed below "Please Wait" there is a communication error between the main remote controller and the FTC control board.<br>• Check wiring connections on the main remote controller.<br>• Replace the main remote controller or the FTC control board.<br>(ii) If "1–49%" is displayed there is a communication error between controller circuit board and FTC control board.<br>• Check the wiring connections on the controller circuit board and the FTC control board.<br>(Ensure the wiring connections between CN1 on the FTC control board and CNS on the controller circuit board)<br>• Replace the controller circuit board and/or the FTC control board. |
| 3 | The main screen appears with a press of the "ON" button, but disappears in a second. | The main remote controller operations do not work for a while after the settings are changed in the service menu. This is because the system takes time to apply the changes. | Normal operation<br>The FTC is applying updated settings made in the service menu. Normal operation will start shortly. |
| 4 | LED2 on FTC is off. (See "7.2 Wiring diagrams".) | When LED1 on FTC is also off. (See "7.2 Wiring diagrams".)<br>1. The controller circuit board unit is not supplied at the rated voltage.<br><br>2. Faulty connector wiring<br><br>3. FTC failure | 1. Check the voltage across the terminals L and N or L3 and N on the controller circuit board (See "7.4 Field wiring".)<br>• When the voltage is not 220 to 240 V AC, check wiring of the unit and of the breaker.<br>• When the voltage is at 220 to 240 V AC, go to "2." below.<br>• Check the N.F.board and TB1 cable.<br>2. Check the voltage across the outdoor unit terminals S1 and S2. (See "7.4 Field wiring".)<br>• Check the cable between the terminals and N.F. board<br>• Check the cable between CNAC1 of the N.F.board and CNAC of the controller circuit board.<br>• Check the cable between CN01 of the FTC board and CNS of the controller circuit board.<br>3. Check the FTC control board.<br>• Check the fuse on FTC control board.<br>• Check for faulty wiring.<br>• If no problem found with the wiring, the FTC control board is faulty. |
| | | When LED1 on FTC is lit.<br>Incorrect setting of refrigerant address.<br>(None of the refrigerant address is set to "0".) | Set the refrigerant address to "0".<br>(Set refrigerant address using SW1(3-6) on controller circuit board.) |
| 5 | LED2 on FTC is blinking. (See "7.2 Wiring diagrams".) | When LED1 is also blinking on FTC .<br>Faulty wiring between FTC and controller circuit board | Check for faulty wiring between FTC and controller circuit board. |
| | | When LED1 on FTC is lit.<br>1. Short-circuited wiring in main remote controller<br><br>2. Main remote controller failure | 1., 2.<br>Remove main remote controller wires and check LED2 on FTC. (See "7.2 Wiring diagrams".)<br>• If LED2 is blinking check for short circuits in the main remote controller wiring.<br>• If LED2 is lit, wire the main remote controller again and:<br>- if LED2 is blinking, the main remote controller is faulty;<br>- if LED2 is lit, faulty wiring of the main remote controller has been corrected. |
| 6 | LED4 on FTC is off. (See "7.2 Wiring diagrams".) | 1. SD memory card is NOT inserted into the memory card slot with correct orientation.<br>2. Not an SD standards compliant memory card. | 1. Correctly insert SD memory card in place until a click is heard.<br>2. Use an SD standards compliant memory card. (Refer to installation manual, "7.4.6 Using SD memory card".) |
| | LED4 on FTC is blinking. (See "7.2 Wiring diagrams".) | 1. Full of data.<br>2. Write-protected.<br>3. NOT formatted.<br>4. Formatted in NTFS file system. | 1. Move or delete data, or replace SD memory card with a new one.<br>2. Release the write-protect switch.<br>3. Refer to installation manual, "7.4.6 Using SD memory card".<br>4. FTC control board is Not compatible with NTFS file system. Use an SD memory card formatted in FAT file system. |

| No. | Fault symptom | Possible cause | Explanation - Solution |
|---|---|---|---|
| 7 | No water at hot tap. | 1. Cold main off<br>2. Strainer (local supply) blocked. | 1. Check and open stop cock.<br>2. Isolate water supply and clean strainer. |
| 8 | Cold water at tap. | 1. Hot water run out.<br>2. Prohibit, schedule timer or holiday mode selected or demand control input (IN4) or smart grid ready (switch-off command).<br>3. Heat pump not working.<br>4. Booster heater cut-out tripped.<br>5. The earth leakage circuit breaker for booster heater breaker (ECB1) tripped.<br>6. The booster heater thermal cut-out has tripped and cannot be reset using the manual reset button.<br>7. Immersion heater cut-out tripped.<br>8. Immersion heater breaker (ECB2) tripped.<br>9. 3-way valve fault | 1. Ensure DHW mode is operating and wait for DHW tank to re-heat.<br>2. Check settings and change as appropriate.<br>3. Check heat pump.<br>4. Check booster heater thermostat and press reset button if safe.<br>Reset button is located on the side of booster heater, covered with white rubber cap. See "7.5.1 Component parts" to find out its position.<br>5. Check the cause and reset if safe.<br>6. Check resistance across the thermal cut-out, if open then the connection is broken and the booster heater will have to be replaced.<br>Contact your Mitsubishi Electric dealer.<br>7. Check immersion heater thermostat and press reset button, located on immersion heater boss, if safe. If the heater has been operated with no water inside it may have failed, so please replace it with a new one.<br>8. Check the cause and reset if safe.<br>9. Check plumbing/wiring to 3-way valve.<br>(i) Manually override 3-way valve using the main remote controller. (Refer to <Manual operation> in "7.7 System setup") If the valve does not still function, go to (ii) below.<br>(ii) Replace 3-way valve coil. If the valve does not still function, go to (iii) below.<br>(iii) Replace 3-way valve. (Refer to Service manual.) |
| 9 | Water heating takes longer. | 1. Heat pump not working.<br>2. Booster heater cut-out tripped.<br>3. Booster heater breaker (ECB1) tripped.<br>4. The booster heater thermal cut-out has tripped and cannot be reset using the manual reset button.<br>5. Immersion heater cut-out has been triggered.<br>6. Immersion heater breaker (ECB2) tripped.<br>7. Flow rate of the sanitary circuit may be reduced. | 1. Check heat pump.<br>2. Check booster heater thermostat and press reset button if safe.<br>Reset button is located on the side of booster heater, covered with white rubber cap. See "7.5.1 Component parts" to find out its position.<br>3. Check the cause and reset if safe.<br>4. Check resistance across the thermal cut-out, if open then connection is broken and the booster heater will have to be replaced.<br>Contact your Mitsubishi Electric dealer.<br>5. Check immersion heater thermostat and press reset button located on immersion heater boss, if safe. If the heater kept running with no water inside, this may have resulted in failure, so replace it with a new one.<br>6. Check the cause and reset if safe.<br>7. Check the following items<br>• Check for trapped air in water pump (sanitary circuit).<br>• Check if the speed of water pump (sanitary circuit) is set to 2.<br>• Check water pump (sanitary circuit) for malfunction. (Refer to Service manual.)<br>• Replace plate heat exchanger (water - water) or scale trap, if there are a blockage which blocks the sanitary circuit. |
| 10 | Temperature of DHW tank water dropped. | When DHW operation is not running, the DHW tank emits heat and the water temperature decreases to a certain level. If water in the DHW tank is reheated frequently because of a significant drop in water temperature, check for the following.<br>1. Water leakage in the pipes that connect to the DHW tank<br>2. Insulation material coming loose or off.<br>3. 3-way valve failure<br>4. Water pump (sanitary circuit) speed setting failure | 1. Take the following measures.<br>• Retighten the nuts holding the pipes onto the DHW tank.<br>• Replace seal materials.<br>• Replace the pipes.<br>2. Fix insulation.<br>3. Check plumbing/wiring to 3-way valve.<br>(i) Manually override 3-way valve using the main remote controller. (Refer to <Manual operation> in "7.7 System setup".) If the valve does not still function, go to (ii) below.<br>(ii) Replace 3-way valve motor. If the valve does not still function, go to (iii) below.<br>(iii) Replace 3-way valve. (Refer to Service manual.)<br>4. Water pump (sanitary circuit) MUST be set to speed 2.<br>When it set to speed 1, hot water would be mixed with cold water due to circulation. |
| 11 | Hot or warm water from cold tap. | Heat of hot water pipe is transferred to cold water pipe. | Insulate/re-route pipework. |
| 12 | Water leakage | 1. Poorly sealed connections of water circuit components<br>2. Water circuit components reaching the end of life | 1. Tighten connections as required.<br>2. Refer to PARTS CATALOG for expected part lifetimes and replace them as necessary. |

| No. | Fault symptom | Possible cause | Explanation - Solution |
|---|---|---|---|
| 13 | Heating system does not reach the target temperature. | 1. Prohibit, schedule timer or holiday mode selected or demand control input (IN4) or smart grid ready (switch-off command).<br>2. Check settings and change as appropriate.<br>3. The temperature sensor is located in a room that has a different temperature relative to that of the rest of the house.<br>4. Heat pump not working.<br>5. Booster heater cut-out tripped.<br>6. Booster heater breaker (ECB1) tripped.<br>7. The booster heater thermal cut-out tripped and cannot be reset using the manual reset button.<br>8. Incorrectly sized heat emitter.<br>9. 3-way valve failure<br>10. Battery problem (wireless control only)<br>11. If a mixing tank is installed, the flow rate between the mixing tank and the unit is less than that between the mixing tank and the local system. | 1. Check settings and change as appropriate.<br>2. Check the battery power and replace if flat.<br>3. Relocate the temperature sensor to a more suitable room.<br>4. Check heat pump.<br>5. Check booster heater thermostat and press reset button if safe.<br>Reset button is located on the side of booster heater, covered with white rubber cap. (See "7.5.1 Component parts" for position.)<br>6. Check the cause of the trip and reset if safe.<br>7. Check resistance across the thermal cut-out, if open then the connection is broken and the booster heater will have to be replaced.<br>Contact your Mitsubishi Electric dealer.<br>8. Check the heat emitter surface area is adequate<br>Increase size if necessary.<br>9. Check plumbing/wiring to 3-way valve.<br>(i) Manually override 3-way valve using the main remote controller. (Refer to <Manual operation> in "7.7 System setup".) If the 3-way valve does not function, go to (ii) below.<br>(ii) Replace 3-way valve motor. If the 3-way valve coil is replaced but the 3-way valve does not function go to (iii) below.<br>(iii) Replace 3-way valve. (Refer to Service manual.)<br>10. Check the battery power and replace if flat.<br>11. Increase the flow rate between the mixing tank and the unit decrease that between the mixing tank and the local system. |
| 14 | In 2-zone temperature control, only Zone2 does not reach the target temperature. | 1. When Zone1 and Zone2 are both in heating mode, the hot water temperature in Zone2 does not exceed that in Zone1.<br>2. Faulty wiring of motorized mixing valve<br>3. Faulty installation of motorized mixing valve<br>4. Incorrect setting of Running time<br>5. Motorized mixing valve failure | 1. Normal action no action necessary.<br>2. Refer to installation manual, "7.4.3 Wiring for 2-zone temperature control".<br>3. Check for correct installation. (Refer to the manual included with each motorized mixing valve.)<br>4. Check for correct setting of Running time.<br>5. Inspect the mixing valve. (Refer to the manual included with each motorized mixing valve.) |
| 15 | After DHW operation room temperature rises slightly. | At the end of the DHW mode operation the 3-way valve diverts hot water away from the DHW circuit into space heating circuit.<br>This is done to prevent the unit components from overheating.<br>The amount of hot water directed into the space heating circuit varies according to the type of the system and of the pipe run between the plate heat exchanger and the unit. | Normal operation no action necessary. |
| 16 | The room temperature rises during DHW operation. | 3-way valve failure | Check the 3-way valve.<br>(i) Manually override 3-way valve using the main remote controller. (Refer to <Manual operation> in "7.7 System setup".) If the 3-way valve does not function, go to (ii) below.<br>(ii) Replace 3-way valve coil. If the 3-way valve coil is replaced but the 3-way valve does not function go to (iii) below.<br>(iii) Replace 3-way valve. (Refer to Service manual.) |
| 17 | Water discharges from pressure relief valve.<br>(Primary circuit) | 1. If continual – pressure relief valve could bite foreign objects and the valve seat may be damaged.<br>2. If intermittent – expansion vessel charge may have reduced/bladder perished. | 1. Turn the handle on the pressure relief valve several turns. If leakage persists, replace the pressure relief valve with a new one.<br>2. Check pressure in expansion vessel.<br>Recharge to 1 bar if necessary.<br>If bladder perished replace expansion vessel with a new one. |
| 18 | Water discharges from pressure relief valve.<br>(Sanitary circuit) | 1. If continual – field supplied pressure reducing valve not working.<br>2. If continual – pressure relief valve could bite foreign objects and the valve seat may be damaged.<br>3. If intermittent – expansion vessel charge may have reduced/bladder perished.<br>4. DHW tank may have subjected to backflow. | 1. Check function of pressure reducing valve and replace if necessary.<br>2. Turn the handle on the pressure relief valve several turns. If leakage persists, replace the pressure relief valve with a new one.<br>3. Check gas-side pressure in expansion vessel.<br>Recharge to correct precharge pressure if necessary.<br>If bladder perished replace expansion vessel with a new one with appropriate pre-charge.<br>4. Check the pressure in DHW tank. If pressure in DHW tank is similar to that in the incoming mains, cold water supply that merges with incoming mains water supply could flow back to DHW tank. Investigate source of back-feed and rectify error in pipework/fitting configuration. Adjust pressure in cold supply. |
| 19 | Noisy water circulation pump | Air in water circulation pump. | Use manual and automatic air vents to remove air from system.<br>Top up water if necessary to achieve 1 bar on primary circuit. |

| No. | Fault symptom | Possible cause | Explanation - Solution |
|---|---|---|---|
| 20 | Noise during hot water draw off typically worse in the morning. | 1. Loose airing cupboard pipework.<br>2. Heaters switching on/off. | 1. Install extra pipe fastening clips.<br>2. Normal operation no action necessary. |
| 21 | Mechanical noise heard coming from the unit. | 1. Heaters switching on/off.<br>2. 3-way valve changing position between DHW and heating mode.<br>3. Heat pump unit (compressor) running | Normal operation no action necessary. |
| 22 | Water circulation pump runs for a short time unexpectedly. | Water circulation pump jam prevention mechanism (routine) to inhibit the build-up of scale. | Normal operation no action necessary. |
| 23 | Milky/Cloudy water (Sanitary circuit) | Oxygenated water | Water from any pressurised system will release oxygen bubbles when water is running. The bubbles will settle out. |
| 24 | Heating mode has been on standby for a long time (does not start operation smoothly.) | The time of “Delay” set in “Economy settings for pump” is too short. (Go to “Service menu” → “Auxiliary settings” → “Economy settings for pump”). | Increase the time of “Delay” in “Economy settings for pump” . |
| 25 | The heat pump unit that was running in the heating mode before power failure is running in the DHW mode after power recovery. | The heat pump unit is designed to run in an operation mode with a higher priority (i.e. DHW mode in this case) at power recovery. | • Normal operation.<br>• After the DHW max. operation time has elapsed or the DHW max. temperature has been reached, the DHW mode switches to the other mode (ex. Heating mode). |
| 26 | The energy monitor value seems not correct.<br><br>Note:<br>There could be some discrepancies between the actual and the calculated values.<br>If you seek for accuracy, please make sure to connect power meter(s) and heat meter to FTC board. Both should be locally supplied. | 1. Incorrect setting of the energy monitor | 1. Check the setting by following the procedure below.<br>(1) Check if the DIP switch on FTC board is set as the table below.<br>Consumed electric energy<br>SW3-4: OFF – Without; ON – With<br>Delivered heat energy<br>SW3-8: OFF – Without; ON – With<br>(2) In the case external electric energy meter and/or heat meter is not used, check if the setting for electric heater and water pump(s) input is correct by referring to <Energy monitor setting> in "6.7 System setup".<br>(3) In the case external electric energy meter and/or heat meter is used, check if the unit of output pulse on external meter matches with the one set at the main remote controller by referring to <Energy monitor setting> in "6.7 System set-up". |
| | | 2. Non-connectable type of external meter (local supply) is connected. | 2. Check if the external meter (local supply) is connectable type by referring to <Energy monitor setting>" in "6.7 System setup". |
| | | 3. External meter (local supply) failure | 3. Check if signal is sent to IN8 to IN10 properly. (Refer to section 7.2 Wiring diagrams)<br>Replace the external heat meter if defective. |
| | | 4. FTC board failure | 4. Check the FTC control board.<br>• Check for faulty wiring.<br>• If no problem found with the wiring, the FTC control board is faulty. Replace the board. |
| 27 | Heat pump is forced to turn ON and OFF. | Smart grid ready input (IN11 and IN12) is used, and switch-on and off commands are input. | Normal operation no action necessary. |

## ■ Error Codes (FTC)

| Code | Error | Action |
|---|---|---|
| L3 | Circulation water temperature overheat protection | Flow rate may be reduced. Check for;<br>• Water leakage<br>• Strainer blockage<br>• Water circulation pump function (Error code may display during filling of primary circuit, complete filling and reset error code.) |
| L4 | DHW tank water temperature overheat protection | Check the immersion heater and it's contactor. |
| L5 | FTC temperature thermistor (THW1, THW2, THW5A, THW5B, THW6, THW7, THW8, THW9) failure | Check resistance across the thermistor. |
| L6 | Circulation water freeze protection | See Action for L3. |
| L8 | Heating operation error | Check and re-attach any thermistors that have become dislodged. |
| L9 | Low primary circuit flow rate detected by flow sensor or flow switch (flow switches 1, 2, 3) | See Action for L3. If the flow sensor or flow switch itself does not work, replace it.<br>**Caution: The pump valves may be hot, please take care.** |
| LC | Boiler circulation water temperature overheat protection | Check if the setting temperature of the Boiler for heating exceeds the restriction. (See the manual of the thermistors "PAC-TH012HT-E") |
| | | Flow rate of the heating circuit from the boiler may be reduced. Check for<br>• water leakage,<br>• strainer blockage<br>• water circulation pump function. |
| LD | Boiler temperature thermistor (THWB1) failure | Check resistance across the thermistor. |
| LE | Boiler operation error | See Action for L8. Check the status of the boiler. |
| LF | Flow sensor failure | Check flow sensor cable for damage or loose connections. |
| LH | Boiler circulation water freeze protection | Flow rate of the heating circuit from the boiler may be reduced. Check for<br>• water leakage<br>• strainer blockage<br>• water circulation pump function. |
| LJ | DHW operation error (type of external plate HEX) | • Check for disconnection of DHW tank water temp. thermistor (THW5B).<br>• Flow rate of the sanitary circuit may be reduced.<br>• Check for water circulation pump function. |
| LL | Setting errors of DIP switches on FTC control board | For boiler operation, check that DIP SW1-1 is set to ON (With Boiler) and DIP SW2-6 is set to ON (With Mixing Tank).<br>For 2-zone temperature control, check DIP SW2-7 is set to ON (2-zone) and DIP SW2-6 is set to ON (With Mixing Tank). |
| LP | Out of water flow rate range | Check the installation Table 6.6.2<br>Check remote controller settings (Service menu / heat pump flow rate range)<br>See Action for L3. |
| J0 | Communication failure between FTC and wireless receiver | Check connection cable for damage or loose connections. |
| P1 | Thermistor (Room temp.) (TH1) failure | Check resistance across the thermistor. |
| P2 | Thermistor (Ref. liquid temp.) (TH2) failure | Check resistance across the thermistor. |
| P6 | Anti-freeze protection of plate heat exchanger | See Action for L3.<br>Check for correct amount of refrigerant. |
| J1 - J8 | Communication failure between wireless receiver and wireless remote controller | Check wireless remote controller's battery is not flat.<br>Check the pairing between wireless receiver to wireless remote controller.<br>Test the wireless communication. (See the manual of wireless system) |
| E0 - E5 | Communication failure between main remote controller and FTC | Check connection cable for damage or loose connections. |
| E6 - EF | Communication failure between FTC and C.B. | Check connection cable for damage or loose connections.<br>Refer to service handbook. |
| E9 | C.B. receives no signal from FTC. | Check connection cable for damage or loose connections. Refer to service handbook. |
| U*, F* | Refrigerant or brine circuit failure | Refer to Error Codes (C.B.) or service handbook. |

**Note: To cancel error codes please switch system off (Press button F4(RESET) on main remote controller, for 3 seconds).**

## ■ Error Codes (C.B.)

| Code | Error | Cause | Action |
|---|---|---|---|
| None | — | ① No voltage is supplied to terminal block (TB1) of heat pump unit.<br>a) Power supply breaker is turned off.<br>b) Contact failure or disconnection of power supply terminal<br>c) Open phase (L or N phase)<br>② Electric power is not charged to power supply terminal of power circuit board.<br>a) Contact failure of power supply terminal<br>b) Open phase on the power circuit board<br>③ Electric power is not supplied to C.B.<br>a) Disconnection of connector (CNDC)<br>④ Disconnection of reactor (ACL)<br>⑤ Disconnection of noise filter circuit board or parts failure in noise filter circuit board<br>⑥ Defective power circuit board<br>⑦ Defective C.B.<br>⑧ Brine pump manual operation<br>⑨ Disconnection of wire between UNIT SIDE and MODULE SIDE. | ① Check following items.<br>a) Power supply breaker<br>b) Connection of power supply terminal block (TB1)<br>c) Connection of power supply terminal block (TB1)<br>② Check following items.<br>a) Connection of power supply terminal block (TB1)<br>b) Connection of terminal on power circuit board<br>Check connection of the connector LI or NI.<br>③ Check connection of the connector (CNDC) on the C.B.<br>Check connection of the connector, CNDC on the noise filter.<br>④ Check connection of reactor. (ACL)<br>⑤ a) Check connection of noise filter circuit board.<br>b) Replace noise filter circuit board.<br>⑥ Replace power circuit board.<br>⑦ Replace C.B. (When items above are checked but the units cannot be repaired).<br>⑧ Check DIP SW6-3 and turn it OFF.<br>⑨ Refer to 'How to remove the module'. Check connection of the wire between UNIT SIDE and MODULE SIDE. |
| F5 (5201) | **63H connector open**<br>Abnormal if 63H connector circuit is open for 3 minutes continuously after power supply.<br><br>63H: High pressure switch | ① Disconnection or contact failure of 63H connector on C.B.<br>② Disconnection or contact failure of 63H<br>③ 63H is working due to defective parts.<br>④ Defective C.B. | ① Check connection of 63H connector on C.B.<br>② Check the 63H side of connecting wire.<br>③ Check continuity by tester.<br>Replace the parts if the parts are defective.<br>④ Replace C.B. |
| U1 (1302) | **High pressure (High pressure switch 63H operated)**<br>Abnormal if high pressure switch 63H operated (4.15 MPa) during compressor operation.<br><br>63H: High pressure switch | ① Clogged or broken pipe<br>② Locked brine pump<br>③ Malfunction of brine pump<br>④ Short cycle of refrigerant or brine circuit<br>⑤ Dirt of brine circuit heat exchanger<br>⑥ Decreased brine flow rate<br>⑦ Disconnection or contact failure of connector (63H) on C.B.<br>⑧ Disconnection or contact failure of 63H connection<br>⑨ Defective C.B.<br>⑩ Defective action of linear expansion valve<br>⑪ Malfunction of brine pump driving circuit | ① Check piping and repair defect.<br>②-⑤ Check heat pump unit and repair defect.<br>⑥ Check the brine flow rate.<br>⑦-⑨ Turn the power off and check F5 is displayed when the power is turned again.<br>⑩ Check linear expansion valve.<br>⑪ Replace C.B. |

| Code | Error | Cause | Action |
|---|---|---|---|
| U2 (1102) | **High discharge temperature**<br>(1) Abnormal if TH4 exceeds 125°C or 110°C continuously for 5 minutes.<br>(2) Abnormal if discharge superheat (Heating: TH4−T63HS) exceeds 70°C continuously for 10 minutes.<br>TH4: Thermistor <Discharge><br><br>**High comp. surface temperature**<br>Abnormal if TH33 exceeds 125°C. In the case of high comp. surface temperature error, compressor does not restart unless the thermistor (TH33) becomes less than 95°C.<br>TH33: Thermistor <Comp. surface> | ① Overheated compressor operation caused by shortage of refrigerant<br>② Defective thermistor<br>③ Defective C.B.<br>④ Defective action of linear expansion valve<br>⑤ Clogging with foreign objects in refrigerant circuit<br>Note:<br>Clogging occur in the parts which become below freezing point when water enters in refrigerant circuit.<br>⑥ In the case of the unit does not restart:<br>Detection temp. of thermistor (TH33) ≥ 95°C | ① Check intake superheat.<br>Check leakage of refrigerant.<br>Charge additional refrigerant.<br>②③ Turn the power off and check if U3 is displayed when the power is turned on again.<br>When U3 is displayed, refer to 'Judgment and action' for U3.<br>④ Check linear expansion valve.<br>⑤ After recovering refrigerant, remove water from entire refrigerant circuit under vacuum more than 1 hour. |
| U3 (5104) | **Open/short circuit of heat pump unit temperature thermistor (TH4, TH33)**<br>Abnormal if open (3°C or less) or short (217°C or more) is detected during compressor operation.<br>(Detection is inoperative for 10 minutes of compressor starting process and for 10 minutes after and during defrosting.)<br>TH4: Thermistor <Discharge><br>TH33: Thermistor <Comp. surface> | ① Disconnection or contact failure of connectors (TH4, TH33) on the C.B.<br>② Defective thermistor<br>③ Defective C.B. | ① Check connection of connector (TH4, TH33) on the C.B.<br>Check breaking of the lead wire for TH4, TH33.<br>② Check resistance value of TH4, TH33 or temperature by microprocessor.<br>③ Replace C.B. |
| U4 (TH3: 5105) (TH7: 5106) (TH8: 5110) (TH32: 5132) (TH34: 5134) | **Open/short of heat pump unit thermistors (TH3, TH32, TH34, TH7 and TH8)**<br>Abnormal if open or short is detected during compressor operation.<br>Open detection of TH3, TH32 and TH34 is inoperative for 10 seconds to 10 minutes after compressor starting.<br>Note:<br>Check which unit has abnormality in its thermistor by switching the mode of SW2. (PAC-SK52ST) | ① Disconnection or contact failure of connectors<br>C.B.: TH3, TH32, TH34, TH7<br>Power board: CN6<br>② Defective thermistor<br>③ Defective C.B. | ① Check connection of connector (TH3, TH32, TH34 TH7) on the C.B.<br>Check connection of connector (CN6) on the power board. Check breaking of the lead wire for TH3, TH32, TH34, TH7, TH8.<br>② Check resistance value of TH3, TH32, TH34,TH7,TH8 or check temperature by microprocessor.<br>③ Replace C.B.<br>Note:<br>Emergency operation is available in case of abnormalities of TH3 and TH7. |
| U5 (4230) | **Temperature of heat sink**<br>Abnormal if TH8 detects temperature indicated 95°C.<br><br>TH8: Thermistor <Heat sink> | ① Rise of ambient temperature<br>② Defective thermistor<br>③ Defective input circuit of power circuit board<br>④ Failure of brine pump drive circuit | ① Check if there is something which causes temperature rise around unit. (Upper limit of ambient temperature is 35°C.)<br>Turn off power, and on again to check if U5 is displayed within 30 minutes.<br>If U4 is displayed instead of U5, follow the action to be taken for U4.<br>② Check resistance value of TH8 or temperature by microprocessor.<br>③ Replace power circuit board.<br>④ Replace C.B. |
| U6 (4250) | **Power module**<br>Check abnormality by driving power module in case overcurrent is detected.<br>(UF or UP error condition) | ① Decrease of power supply voltage<br>② Looseness, disconnection or converse of compressor wiring connection<br>③ Defective compressor<br>④ Defective C.B. | ① Check facility of power supply.<br>② Correct the wiring (U•V•W phase) to compressor.<br>③ Check compressor<br>④ Replace C.B. |

| Code | Error | Cause | Action |
|---|---|---|---|
| U7 (1502) | **Too low superheat due to low discharge temperature**<br>Abnormal if discharge superheat is continuously detected less than or equal to −15°C for 3 minutes even though linear expansion valve has minimum open pulse after compressor starts operating for 10 minutes. | ① Disconnection or loose connection of discharge temperature thermistor (TH4)<br>② Defective holder of discharge temperature thermistor<br>③ Disconnection or loose connection of linear expansion valve's coil<br>④ Disconnection or loose connection of linear expansion valve's connector<br>⑤ Defective linear expansion valve | ①② Check the installation conditions of discharge temperature thermistor (TH4).<br>③ Check the coil of linear expansion valve.<br>④ Check the connection or contact of LEV-A on C.B.<br>⑤ Check linear expansion valve. |
| U8 (4400) | **Brine pump**<br>Abnormal if rotational frequency of the brine pump is not detected during DC brine pump operation.<br>Brine pump rotational frequency is abnormal if 500 rpm or below or 5000 rpm or more detected continuously for 1 minute. | ① Failure in the operation of the DC brine pump<br>② Failure in the C.B. | ① Check or replace the DC brine pump.<br>② Check the voltage of the C.B. during operation.<br>③ Replace the C.B.<br>(When the failure is still indicated even after performing the action ① above.) |
| U9 (4220) | **Abnormal voltage error**<br>See service handbook. | See service handbook. | See service handbook. |
| UE (1302) | **Abnormal pressure of 63HS**<br>Abnormal if 63HS detects 0.1 MPa or less.<br>Detection is inoperative for 3 minutes after compressor starting and 3 minutes after and during defrosting.<br>63HS: High pressure sensor | ① Disconnection or contact failure of connector (63HS) on the C.B.<br>② Defective pressure sensor<br>③ Defective C.B. | ① Check connection of connector (63HS) on the C.B.<br>Check breaking of the lead wire for 63HS.<br>② Check pressure by microprocessor. (Pressure sensor/ 63HS)<br>③ Replace C.B. |
| UL (1300) | **Low pressure**<br>Abnormal if TH33-TH4 exceeds 20°C and TH33 exceeds 80°C during compressor operation. | ① Defective linear expansion valve.<br>② Defective C.B. | ① Check linear expansion valve.<br>② Replace C.B. |
| UF (4100) | **Compressor overcurrent interruption (When compressor locked)**<br>Abnormal if overcurrent of DC bus or compressor is detected within 30 seconds after compressor starts operating. | ① Decrease of power supply voltage<br>② Looseness, disconnection or converse of compressor wiring connection<br>③ Defective compressor<br>④ Defective power board | ① Check facility of power supply.<br>② Correct the wiring (U•V•W phase) to compressor.<br>③ Check compressor.<br>④ Replace power circuit board. |
| UH (5300) | **Current sensor error or input current error**<br>• Abnormal if current sensor detects –1.0A to 1.0A during compressor operation. (This error is ignored in case of test run mode.)<br>• Abnormal if 40A of input current is detected or 37A or more of input current is detected for 10 seconds continuously. | ① Disconnection of compressor wiring<br>② Defective circuit of current sensor on power circuit board<br>③ Decrease of power supply voltage<br>④ Leakage or shortage of refrigerant | ① Correct the wiring (U•V•W phase) to compressor.<br>② Replace power circuit board.<br>③ Check the facility of power supply.<br>④ Check leakage of refrigerant. |
| UA (2511) | **Low brine flow rate (flow switch operated)**<br>Abnormal if flow switch is operated (under 5.5L/min) during compressor operation. | ① Valve or PICV of ambient loop circuit is closed during operation.<br>② Disconnection or loose connection of connector (63L) on C.B.<br>③ Disconnection or loose connection of 63L<br>④ Defective C.B.<br>⑤ Misconnection of Water/Brine pipe. | ① Check valve or PICV.<br>Active SW6-4 on FTC, if TBI.4 7-8 is connected.<br>②-④ Turn the power off and on again to check if F3 is displayed on restarting.<br>If F3 is displayed, follow the F3 processingdirection.<br>⑤ Check Water/Brine pipe connection. |
| UP (4210) | **Compressor overcurrent interruption**<br>Abnormal if overcurrent DC bus or compressor is detected after compressor starts operating for 30 seconds. | See service handbook. | See service handbook. |

## ■ Annual Maintenance

It is essential that the heat pump is serviced at least once a year by a qualified individual. Any required parts should be purchased from Mitsubishi Electric. NEVER bypass safety devices or operate the unit without them being fully operational. For more details, refer to service handbook.

**Note:**
**Within the first couple of months of installation, remove and clean the heat pump unit's strainer plus any additional filter items that are fitted external to the heat pump unit. This is especially important when installing on an old/existing pipe work system.**

In addition to annual servicing it is necessary to replace or inspect some parts after a certain period of system operation. Please see tables below for detailed instructions. Replacement and inspection of parts should always be done only by a competent person with relevant training and qualifications.

**Parts which require regular replacement**

| Parts | Replace every | Possible failures |
|---|---|---|
| Pressure relief valve (PRV) Manometer | 6 years | Water leakage |

**Parts which require regular inspection**

| Parts | Check every | Possible failures |
|---|---|---|
| Pressure relief valve (3 bar) | 1 year (turning the knob manually) | PRV would be fixed and expansion vessel would burst |
| Immersion heater | 2 years | Earth leakage causing circuit breaker to activate (Heater is always OFF) |
| Water circulation pump (Primary circuit) | 20,000 hrs (3 years) | Water circulation pump failure |

**Parts which must NOT be reused when servicing**

* O-ring
* Gasket

**Note:**
- **Always replace the gasket for pump with a new one at each regular maintenance (every 20,000 hours of use or every 3 years).**

**<Draining the heat pump unit and its primary heating circuit (local)>**
**WARNING: DRAINED WATER MAY BE VERY HOT**

1. Firstly to eliminate any air in heat pump unit pipe works, engage the DHW pump circulator for 1-2 mins and expel any trapped air via nearest hot water tap so as unit becomes fully primed/water charged.
2. Before attempting to drain the heat pump unit isolate from the electrical supply to prevent the immersion and booster heaters burning out.
3. Isolate cold water feed to DHW tank.
4. Open a hot water tap to start draining without a vacuum.
5. Attach a hose to the DHW tank drain cocks. The hose should be able to withstand heat as the draining water could be very hot. The hose should drain to a place lower than the DHW tank bottom to encourage siphoning.
6. When the DHW tank is drained close drain cock and the hot water tap.
7. Attach hose to water circuit drain cocks (No. 7 on Figure 7.5.1). The hose should be able to withstand heat as the draining water could be very hot. The hose should drain to a place lower than the booster heater drain cock to encourage siphoning. Open the pump valves and the strainer valves.
8. Water remains in the strainer still after the heat pump unit was drained.
   Drain the strainer by removing the strainer cover.

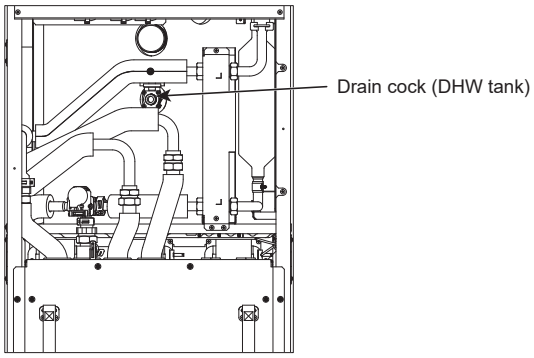


<Figure 7.8.1>

## ■ Engineers Forms

Should settings be changed from default, please enter and record new setting in 'Field Setting' column. This will ease resetting in the future should the system use change or the circuit board need to be replaced.

**Commissioning/Field settings record sheet**

| Main remote controller screen | | | | Parameters | Default setting | Field setting | Notes |
|---|---|---|---|---|---|---|---|
| **Main** | | | Zone1 heating room temp. | 10°C to 30°C | 20°C | | |
| | | | Zone2 heating room temp. *8 | 10°C to 30°C | 20°C | | |
| | | | Zone1 heating flow temp. | 20°C to 60°C | 45°C | | |
| | | | Zone2 heating flow temp. *1 | 20°C to 60°C | 35°C | | |
| | | | Zone1 heating compensation curve | −9°C to +9°C | 0°C | | |
| | | | Zone2 heating compensation curve *1 | −9°C to +9°C | 0°C | | |
| | | | Holiday mode | Active/Non active/Set time | — | | |
| **Option** | | | Forced DHW operation | On/Off | — | | |
| | | | DHW | On/Off/Timer | On | | |
| | | | Heating | On/Off/Timer | On | | |
| | | | Energy monitor | Consumed electrical energy/Delivered energy | — | | |
| **Setting** | DHW | | Operation mode | Normal/Eco | Eco | | |
| | | | DHW max. temp. | 40°C to 60°C | 50°C | | |
| | | | DHW ma. temp. drop | 5°C to 30°C | 10°C | | |
| | | | DHW max. operation time | 30 to 120 min | 60 min | | |
| | | | DHW mode restriction | 30 to 120 min | 30 min | | |
| | | | DHW recharge | Standard/Large | Standard | | |
| | Legionella prevention | | Active | Yes/No | Yes | | |
| | | | Hot water temp. | 60°C to 70°C | 65°C | | |
| | | | Frequency | 1 to 30 days | 15 days | | |
| | | | Start time | 00:00 to 23:00 | 03:00 | | |
| | | | Max. operation time | 1 to 5 hours | 3 hours | | |
| | | | Duration of maximum temp. | 1 to 120 min | 30 min | | |
| | Heating | | Zone1 operation mode | Heating room temp./ Heating flow temp./ Heating compensation curve | Room temp. | | |
| | | | Zone2 operation mode *1 | Heating room temp./ Heating flow temp./ Heating compensation curve | Compensation curve | | |
| | Compensation curve | Hi flow temp. set point | Zone1 outdoor ambient temp. | −30°C to +33°C | −15°C | | |
| | | | Zone1 flow temp. | 20°C to 60°C | 50°C | | |
| | | | Zone2 outdoor ambient temp. *1 | −30°C to +33°C | −15°C | | |
| | | | Zone2 flow temp. *1 | 20°C to 60°C | 40°C | | |
| | | Lo flow temp. set point | Zone1 outdoor ambient temp. | −28°C to +35°C | 35°C | | |
| | | | Zone1 flow temp. | 20°C to 60°C | 25°C | | |
| | | | Zone2 outdoor ambient temp. *1 | −28°C to +35°C | 35°C | | |
| | | | Zone2 flow temp.*1 | 20°C to 60°C | 25°C | | |
| | | Adjust | Zone1 outdoor ambient temp. | −29°C to +34°C | — | | |
| | | | Zone1 flow temp. | 20°C to 60°C | — | | |
| | | | Zone2 outdoor ambient temp. *1 | −29°C to +34°C | — | | |
| | | | Zone2 flow temp. *1 | 20°C to 60°C | — | | |
| | Holiday | | DHW | Active/Non active | Non active | | |
| | | | Heating | Active/Non active | Active | | |
| | | | Zone1 heating room temp. | 10°C to 30°C | 15°C | | |
| | | | Zone2 heating room temp. *8 | 10°C to 30°C | 15°C | | |
| | | | Zone1 heating flow temp. | 20°C to 60°C | 35°C | | |
| | | | Zone2 heating flow temp. *1 | 20°C to 60°C | 25°C | | |
| | Initial settings | | Language | EN/FR/DE/SV/ES/IT/DA/NL/FI/NO/PT/BG/PL/CZ/RU/TR/SL | EN | | |
| | | | °C/°F | °C/°F | °C | | |
| | | | Summer time | On/Off | Off | | |
| | | | Temp. display | Room/DHW tank/Room&DHW tank / Off | Off | | |
| | | | Time display | hh:mm/hh:mm AM/AM hh:mm | hh:mm | | |
| | | | Room sensor settings for Zone1 | TH1/Main RC/Room RC1-8/"Time/Zone" | TH1 | | |
| | | | Room sensor settings for Zone2 *1 | TH1/Main RC/Room RC1-8/"Time/Zone" | TH1 | | |
| | | | Room RC zone select *1 | Zone1/Zone2 | Zone1 | | |

## ■ Engineers Forms

**Commissioning/Field settings record sheet (continued from the previous page)**

| Main remote controller screen | | | | | | Parameters | | | Default setting | Field setting | Notes |
|---|---|---|---|---|---|---|---|---|---|---|---|
| Setting | Service menu | Thermistor adjustment | THW1 | | | −10°C to +10°C | | | 0°C | | |
| | | | THW2 | | | −10°C to +10°C | | | 0°C | | |
| | | | THW5A | | | −10°C to +10°C | | | 0°C | | |
| | | | THW5B | | | −10°C to +10°C | | | 0°C | | |
| | | | THW6 | | | −10°C to +10°C | | | 0°C | | |
| | | | THW7 | | | −10°C to +10°C | | | 0°C | | |
| | | | THW8 | | | −10°C to +10°C | | | 0°C | | |
| | | | THW9 | | | −10°C to +10°C | | | 0°C | | |
| | | | THW10 | | | −10°C to +10°C | | | 0°C | | |
| | | | THWB1 | | | −10°C to +10°C | | | 0°C | | |
| | | Auxiliary settings | Economy settings for pump. | | | On/Off *2 | | | On | | |
| | | | | | | Delay (3 to 60 min) | | | 10 min | | |
| | | | Electric heater (Heating) *12 | | | Space heating: On (used)/Off (not used) | | | On | | |
| | | | | | | Electric heater delay timer (5 to 180 min) | | | 30 min | | |
| | | | Electric heater (DHW) | | | Booster heater | DHW: On (used)/Off (not used) | | On | | |
| | | | | | | Immersion heater | DHW: On (used)/Off (not used) *12 | | On | | |
| | | | | | | Electric heater delay timer (15 to 30 min) | | | 15 min | | |
| | | | Mixing valve control | | | Running (10 to 240 sec) | | | 120 sec | | |
| | | | | | | Interval (1 to 30 min) | | | 2 min | | |
| | | | Flow sensor *10 | | | Minimum (0 to 100L/min) | | | 5 L/min | | |
| | | | | | | Maximum (0 to 100L/min) | | | 100 L/min | | |
| | | | Analog output | | | Interval (1 to 30 min) | | | 5 min | | |
| | | | | | | Priority (Normal/High) | | | Normal | | |
| | | Pump speed | DHW | | | Pump speed (1 to 5) | | | 5 | | |
| | | | Heating | | | Pump speed (1 to 5) | | | 5 | | |
| | | Heat source setting | | | | Standard/Heater/Boiler/Hybrid *3 | | | Standard | | |
| | | Heat pump settings | Heat pump flow rate range | | | Minimum (0 to 100L/min) | | | 5 L/min | | |
| | | | | | | Maximum (0 to 100L/min) | | | 100 L/min | | |
| | | | Quiet mode | | | Day (Mon to Sun) | | | — | | |
| | | | | | | Time | | | 0:00 to 23:45 | | |
| | | | | | | Quiet level (Normal/Level1/Level2) | | | Normal | | |
| | | Operation settings | Heating operation *4 | Flow temp. range *6 | | Minimum.temp. (20 to 45°C) | | | 30°C | | |
| | | | | | | Maximum.temp. (35 to 60°C) | | | 50°C | | |
| | | | | Room temp. control *9 | | Mode (Normal/Fast) | | | Normal | | |
| | | | | | | Interval (10 to 60 min) | | | 10 min | | |
| | | | | Heat pump thermo diff. adjust | | On/Off *2 | | | On | | |
| | | | | | | Lower limit (−9 to −1°C) | | | -5°C | | |
| | | | | | | Upper limit (+3 to +5°C) | | | 5°C | | |
| | | | Freeze stat function *7 | | | Outdoor ambient temp. (3 to 20°C) / ** | | | 5°C | | |
| | | | Simultaneous operation (DHW/Heating) | | | On/Off *2 | | | Off | | |
| | | | | | | Outdoor ambient temp. (−30 to +10°C) | | | −15°C | | |
| | | | Cold weather function | | | On/Off *2 | | | Off | | |
| | | | | | | Outdoor ambient temp. (−30 to −10°C) | | | −15°C | | |
| | | | Boiler operation | | | Hybrid settings | Outdoor ambient temp. (−30 to +10°C) | | −15°C | | |
| | | | | | | | Priority mode (Ambient/Cost/$CO_2$) | | Ambient | | |
| | | | | | | Intelligent settings | Energy price *5 | Electricity (0.001 to 999 */kWh) | 0.5 */kWh | | |
| | | | | | | | | Boiler (0.001 to 999 */kWh) | 0.5 */kWh | | |
| | | | | | | | $CO_2$ emission | Electricity (0.001 to 999 kg -CO2/kWh) | 0.5 kg -CO2/kWh | | |
| | | | | | | | | Boiler (0.001 to 999 kg -CO2/kWh) | 0.5 kg -CO2/kWh | | |
| | | | | | | | Heat source | Heat pump capacity (1 to 40 kW) | 11.2 kW | | |
| | | | | | | | | Boiler efficiency (25 to 150%) | 80% | | |
| | | | | | | | | Booster heater 1 capacity (0 to 30 kW) | 2 kW | | |
| | | | | | | | | Booster heater 2 capacity (0 to 30 kW) | 4 kW | | |

## ■ Engineers Forms

**Commissioning/Field settings record sheet (continued from the previous page)**

| Main remote controller screen | | | | | | Parameters | Default setting | Field setting | Notes |
|---|---|---|---|---|---|---|---|---|---|
| Setting | Service menu | Operation settings | Smart grid ready | DHW | On/Off | | Off | | |
| | | | | | Target temp (+1 to +20°C) / -- (Non active) | | -- | | |
| | | | | Heating | On/Off | | Off | | |
| | | | | | Target temp. | Switch-on recommendation (20 to 60°C) | 50°C | | |
| | | | | | | Switch-on command (20 to 60°C) | 55°C | | |
| | | | | Pump cycles | Heating (On/Off) | | On | | |
| | | | | | Interval (10 to 120 min) | | 10 min | | |
| | | | Floor dry up function | | On/Off *2 | | Off | | |
| | | | | | Target temp. | Start&Finish (20 to 60°C) | 30°C | | |
| | | | | | | Max. temp. (20 to 60°C) | 45°C | | |
| | | | | | | Max. temp. period (1 to 20 days) | 5 days | | |
| | | | | | Flow temp. (Increase) | Temp. increase step (+1 to +10°C) | +5°C | | |
| | | | | | | Increase interval (1 to 7 days) | 2 days | | |
| | | | | | Flow temp. (Decrease) | Temp. decrease step (−1 to −10°C) | −5°C | | |
| | | | | | | Decrease interval (1 to 7 days) | 2 days | | |
| | | | Summer mode | | On/Off | | Off | | |
| | | | | | Outdoor ambient temp. | Heating ON (4 to 19°C) | 10°C | | |
| | | | | | | Heating OFF (5 to 20°C) | 15°C | | |
| | | | | | Judgement time | Heating ON (1 to 48 hours) | 6 hours | | |
| | | | | | | Heating OFF (1 to 48 hours) | 6 hours | | |
| | | | | | Forced heating ON (−30 to 10°C) | | 5 °C | | |
| | | | Water flow control | | On/Off | | Off | | |
| | | Energy monitor settings | | Electric heater capacity | Booster heater 1 capacity | 0 to 30kW *12 | 2kW | | |
| | | | | | Booster heater 2 capacity | 0 to 30kW *12 | 4kW | | |
| | | | | | Immersion heater capacity | 0 to 30kW | 0kW | | |
| | | | | | Analog output | 0 to 30kW | 0kW | | |
| | | | | Delivered energy adjustment | | −50 to +50% | 0% | | |
| | | | | Water pump input | Pump 1 | 0 to 200W or ***(factory fitted pump) | *** | | |
| | | | | | Pump 2 | 0 to 200W | 0W | | |
| | | | | | Pump 3 | 0 to 200W | 0W | | |
| | | | | | Pump 4 | 0 to 200W | 72W | | |
| | | | | Electric energy meter | | 0.1/1/10/100/1000 pulse/kWh | 1000 pulse/kWh | | |
| | | | | Heat meter | | 0.1/1/10/100/1000 pulse/kWh | 1000 pulse/kWh | | |
| | | External input settings | | Demand control (IN4) | | Heat source OFF/Boiler operation | Boiler operation | | |
| | | | | Outdoor thermostat (IN5) | | Heater operation/Boiler operation | Boiler operation | | |
| | | Thermo ON output | | | | Zone1/Zone2/Zone1&2 | Zone1&2 | | |

*1 The settings related to Zone2 can be switched only when 2 zone temperature control is enabled (when DIP SW2-6 and SW 2-7 (FTC) are ON).
*2 On: the function is active; Off: the function is inactive.
*3 When DIP SW1-1 (FTC) is set to OFF “WITHOUT Boiler” or SW2-6 (FTC) is set to OFF “WITHOUT Mixing tank”, neither Boiler nor Hybrid can be selected.
*4 Valid only when operating in Room temp. control mode.
*5 “*” of “*/kWh” represents currency unit (e.g. € or £ or the like)
*6 Valid only when operating in Heating room temperature.
*7 If asterisk (**) is chosen freeze stat function is deactivated. (i.e. primary water freeze risk)
*8 The settings related to Zone2 can be switched only when 2-zone temperature control or 2-Zone valve ON/OFF control is active.
*9 When DIP SW5-2 (FTC) is set to OFF, the function is active.
*10 Do not change the setting since it is set according to the specification of flow sensor attached to the heat pump unit.
*11 The default setting is 1 pulse/kWh depend on the connected indoor unit.
*12 If booster heater equipped, the function is activated.

## 7.9. Supplementary information

### ■ Back-up operation of boiler

Heating operation is backed up by boiler.
For more details, refer to the installation manual of PAC-TH012HT-E.

**<Installation & System set up>**

1. Set DIP-SW 1-1 (FTC) to ON "With boiler" and SW2-6 (FTC) to ON “With Mixing tank”.
2. Install the thermistors THWB1*1 on the boiler circuit.
3. Connect the output wire (OUT10: Boiler operation) to the input (room thermostat input) on the boiler. *2
4. Install one of the following room temperature thermostats. *3

- Wireless remote controller (option)
- Room temp. thermostat (local supply)
- Main remote controller (remote position)

*1 The boiler temperature thermistor is an optional part.
*2 OUT10 has no voltage across it.
*3 Boiler heating is controlled on/off by the Room temp. thermostat.

**<Main remote controller settings>**

1. Go to Service menu > Heat source setting and choose “Boiler” or “Hybrid”. *4
2. Go to Service menu > Operation settings > Boiler settings to make detailed settings for “Hybrid” above .

*4 The “Hybrid” automatically switches heat sources between Heat pump (and Electric heater) and boiler.

### ■ Product fiche of temperature control

(a) Supplier's name: MITSUBISHI ELECTRIC CORPORATION
(b) Supplier's model identifier: PAR-WT50R-E and PAR-WR51R-E
(c) The class of the temperature control: Ⅵ
(d) The contribution of the temperature control to seasonal space heating energy efficiency: 4%

# Contents


**1 Safety precautions** FOR INSTALLER .....C-2
1.1 Before installation (Environment) ..... C-2
1.2 Before installation or relocation ..... C-2
1.3 Before electric work ..... C-2
1.4 Before starting the test run ..... C-3
1.5 Electric booster and immersion heaters ..... C-3

**2 Installing the FTC unit** .....C-4
2.1 Check the parts (Fig. 2.1.1) ..... C-4
2.2 Choosing the FTC unit installation location ..... C-4
2.3 Installing the FTC unit (Fig. 2.3.1, 2.3.2, 2.3.3, 2.3.4) ..... C-5

**3 System** .....C-6
3.1 First step (Electrical work) ..... C-6
3.2 Second step (Outdoor unit type) ..... C-6
3.3 Third step (Functions setting) ..... C-7
3.4 Fourth step (Functions setting) ..... C-8
3.5 Local system ..... C-10
3.6 Minimum amount of water required in the space heating/cooling circuit... C-11
3.7 Energy monitor ..... C-11

**4 Electrical work** .....C-12
4.1 Electrical connection ..... C-12
4.2 Connecting the main remote controller ..... C-14
4.3 Main Remote Controller Options ..... C-17
4.4 Connecting the thermistor cables ..... C-19
4.5 Connecting inputs/outputs ..... C-21
4.6 Wiring for heater ..... C-23
4.7 Wiring for 2-zone temperature control ..... C-24
4.8 2-zone valve ON/OFF control ..... C-24
4.9 Smart grid ready ..... C-24
4.10 Installation procedure for DHW tank ..... C-25
4.11 Using SD memory card ..... C-26

**5 DIP Switch setting** .....C-27
5.1 DIP Switch Functions ..... C-27
5.2 Outdoor unit type ..... C-28
5.3 Functions setting ..... C-28
5.4 Operation setting ..... C-30
5.5 Emergency mode (Heater only operation) ..... C-31
5.6 Emergency mode (Boiler operation) ..... C-31
5.7 Indoor unit only operation (during installation work) ..... C-31

**6 Before test run** .....C-32
6.1 Check ..... C-32
6.2 Self-check ..... C-32

**7 Main remote controller operation** .....C-33
7.1 Safety precautions FOR USER ..... C-33
7.2 Main remote controller ..... C-34

**8 Troubleshooting** .....C-45

**9 Multiple outdoor units control** .....C-49
9.1 Wiring for multiple outdoor units control ..... C-49
9.2 Pipe work ..... C-49
9.3 Electrical connection ..... C-53
9.4 Main remote controller wiring ..... C-55
9.5 Connecting the thermistor cables ..... C-55
9.6 Dip switch functions ..... C-55
9.7 Connecting inputs/outputs ..... C-57

**10 Supplementary information** .....C-61
10.1 Refrigerant collecting (pumpdown) for split model systems only .... C-61
10.2 Back-up operation of boiler ..... C-61

- **Before installing the FTC unit, make sure you read all the "Safety precautions".**
- **Please report to your supply authority or obtain their consent before connecting this equipment to the power supply system.**

**⚠ Warning:**
**Precautions that must be observed to prevent injuries or death.**

**⚠ Caution:**
**Precautions that must be observed to prevent damage to the unit.**

After installation, perform the test run to ensure normal operation. Then explain to your customer the "Safety Precautions" *1, use, and maintenance of the unit based on the information in this manual. This manual must be given to the user. This manual must always be kept by the actual users.
*1 "Safety Precautions" for user is indicated on page C-33.
⏚ : This indicates a part which must be grounded.

**⚠ Warning:**
**Carefully read the labels attached to the unit.**

**⚠ Warning:**
- **The unit must not be installed by the user. Ask an installer or an authorized technician to install the unit. If the unit is installed improperly, electric shock, or fire may be caused.**
- **For installation work, follow the instructions in the Installation Manual and use tools and pipe components specifically made for use with refrigerant specified in the outdoor unit installation manual.**
- **The unit must be installed according to the instructions in order to minimize the risk of damage by earthquakes, typhoons, or strong winds. Improperly installed units may fall down and cause damage or injuries.**
- **The unit must be securely installed on a structure that can sustain its weight. If the unit is mounted on an unstable structure, it may fall down and cause damage or injuries.**
- **All electric work must be performed by a qualified technician according to local regulations and the instructions given in this manual. The unit must be powered by dedicated power lines and the correct voltage and circuit breakers must be used. Power lines with insufficient capacity or incorrect electrical work may result in electric shock or fire.**
- **Only the specified cables can be used for wiring. Connections must be made securely without tension on the terminals. If cables are connected or installed improperly, it may result in overheating or fire.**
- **Terminal block cover panel of the unit must be firmly fixed. If the cover panel is mounted improperly, dust and moisture may enter the unit, and it may cause electric shock or fire.**
- **Make sure to use accessories authorized by Mitsubishi Electric and ask an installer or an authorized technician to install them. If accessories are improperly installed, it may cause electric shock, or fire.**
- **Do not remodel the unit. Consult an installer for repairs. If alterations or repairs are not performed correctly, it may cause electric shock or fire.**
- **The user should never attempt to repair the unit or transfer it to another location. If the unit is installed improperly, it may cause electric shock or fire. If the FTC unit needs to be repaired or moved, ask an installer or an authorized technician.**
- **During installing a heat pump system, keep water from splashing on the FTC unit.**
- **When installing sensors and parts, do not expose the terminals.**

## 1.1 Before installation (Environment)

**⚠ Caution:**
- **Do not install the FTC unit in outdoor location as it is designed for indoor installation only. Otherwise electric shock or breakdown may be caused by water, wind or dust.**
- **Do not use the unit in an unusual environment. If the FTC unit is installed or exposed to steam, volatile oil (including machine oil), or sulfuric gas, or exposed to briny air, the internal parts can be damaged.**
- **Do not install the unit where combustible gases may leak, be produced, flow, or accumulate. If combustible gas accumulates around the unit, it may cause fire or explosion.**
- **When installing the unit in a hospital or in a building where communications equipment are installed, you may need to take measures to prevent noise and electronic interference. Inverters, home appliances, high-frequency medical equipment, and radio communications equipment can cause the FTC unit to malfunction or to breakdown. At the same time, the noise and electric interference from the FTC unit may disturb the proper operation of nearby medical equipment, and communications equipment.**

## 1.2 Before installation or relocation

**⚠ Caution:**
- **Be very careful when moving the units. Do not hold the packaging bands. Wear protective gloves to unpack and to move the units, in order to avoid injury to your hands.**
- **Be sure to safely dispose of the packaging materials. Packaging materials, such as nails and other metal or wooden parts may cause injuries.**
- **Do not wash the FTC unit. You may receive an electric shock.**

## 1.3 Before electric work

**⚠ Caution:**
- **Be sure to install a circuit breaker. If it is not installed, there may be a risk to get an electric shock.**
- **For the power lines, use standard cables of sufficient capacity. Otherwise, it may cause a short circuit, overheating, or fire.**
- **When installing the power lines, do not apply tension to the cables. The cables may be cut or overheated resulting in a fire.**
- **Make sure to ground the unit. Do not connect the ground wire to gas or water pipes, lightning rods, or telephone grounding lines. If the unit is not properly grounded, there may be a risk to get an electric shock.**
- **Make sure to use circuit breakers (ground fault interrupter, isolating switch (+B fuse), and molded case circuit breaker) with the specified capacity. If the circuit breaker capacity is larger than the specified capacity, breakdown or fire may result.**

## 1.4 Before starting the test run

⚠ **Caution:**

- **Turn on the main power switch of the outdoor unit more than 12 hours before starting operation. Starting operation immediately after turning on the power switch can severely damage the internal parts. Keep the main power switch turned on during the operation period.**
- **In heating mode, to avoid the heat emitters being damaged by excessively hot water, set the target flow temperature to a minimum of 2ºC below the maximum allowable temperature of all the heat emitters. For Zone2, set the target flow temperature to a minimum of 5ºC below the maximum allowable flow temperature of all the heat emitters in Zone2 circuit.**
- **Before starting operation, check that all protective parts are correctly installed. Make sure not to get injured by touching high voltage parts.**
- **Do not touch any switch with wet hands. There may be a risk to get an electric shock.**
- **After stopping operation, make sure to wait at least 5 minutes before turning off the main power. Otherwise, it may cause breakdown.**

## 1.5 Electric booster and immersion heaters

⚠ **Warning:**

- **FTC has signal outputs for heaters however it can not isolate power to them in the event of overheating. All electrical heaters used on the water circuit must have.**

  **a) A thermostat to prevent overheating.**
  **b) A non-self resetting thermal mechanism to prevent overheating.**

**Abbreviations and glossary**

| Abbreviations/Word | Description |
|---|---|
| Ambient temperature | The outdoor temperature |
| Freeze stat. function | Heating to prevent water pipes freezing |
| ASHP/HP | Air source heat pump |
| COP | Coefficient of performance the efficiency of the heat pump |
| Cylinder unit | Indoor unvented DHW tank and component plumbing parts |
| Hydrobox | Indoor unit housing the component plumbing parts (NO DHW tank) |
| DeltaT | Difference in temperature between two system locations. |
| DHW mode | Domestic hot water heating mode for showers, sinks, etc |
| Flow temperature | Temperature at which water is delivered to the primary circuit |
| FTC (Main) | Flow temperature controller, the circuit board in charge of controlling the system, main board for multiple outdoor units control |
| FTC (Sub) | Sub board for multiple outdoor units control |
| Compensation curve mode | Space heating incorporating outdoor temperature compensation |
| Heating mode | Space heating through radiators or under floor heating |
| Cooling mode | Space cooling through radiators or under floor cooling |
| Legionella | Bacteria potentially found in plumbing, showers and water tanks that may cause Legionnaires disease |
| LP mode | Legionella prevention mode – a function on systems with tanks to prevent the growth of legionella bacterium |
| Packaged model | Plate heat exchanger (Refrigerant - Water) in the outdoor heat pump unit |
| Split model | Plate heat exchanger (Refrigerant - Water) in the indoor unit |
| TRV | Thermostatic radiator valve – a valve on the entrance or exit of the radiator panel controlling the heat output |

## 2.1 Check the parts (Fig. 2.1.1)

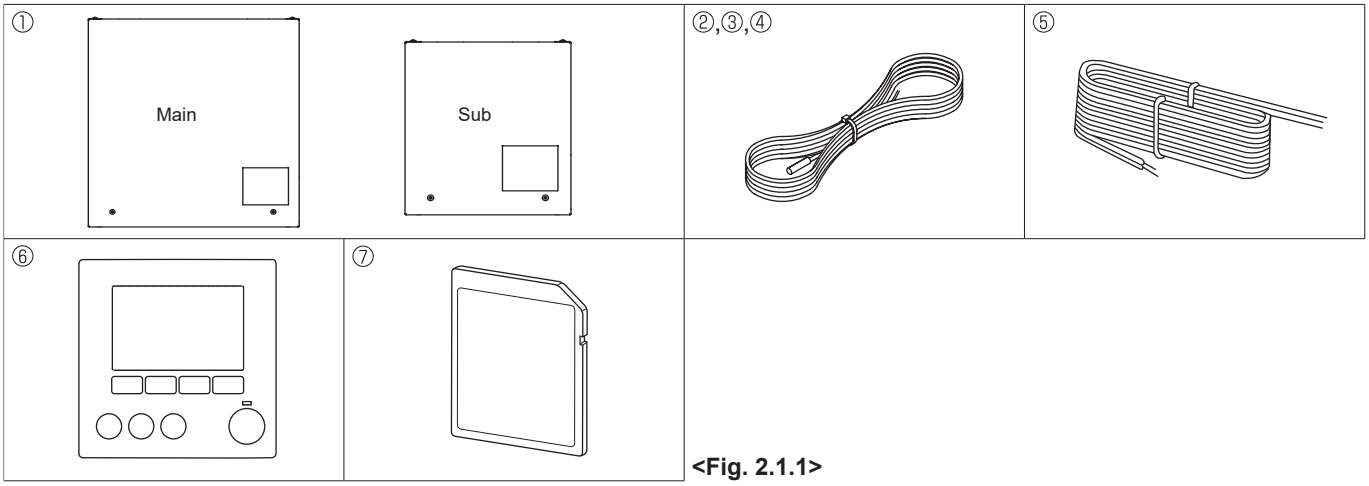


<Fig. 2.1.1>



The FTC unit should be supplied with the following parts.

| | Part name | Wiring diagram symbol | Q'ty | | | |
|---|---|---|---|---|---|---|
| | | | PAC-IF071 | PAC-IF072 | PAC-IF073 | PAC-SIF051 |
| ① | FTC (main) unit/FTC (sub) unit | | 1 | 1 | 1 | 1 |
| ② | Liquid refrigerant temp. thermistor (Lead wire: 5 m/Red, Connector: 3p/Yellow) | TH2 | 1 | – | – | 1 |
| ③ | Flow water temp. and Return water temp. thermistor (Lead wire: Gray (Flow water temp.), Black(Return water temp.), Connector: 4p/Red) | THW1/2 | 1 (5 m/5 m) | 1 (5 m/5 m) | 1 (1.1 m/1.2 m) | 1 (5 m/5 m) |
| ④ | Tank temp. thermistor (Lead wire: Blue (tank temp. thermistor upper), Gray (tank temp. thermistor lower), Connector: 4p/Blue) | THW5A/5B | – | – | 1 | – |
| ⑤ | Main remote controller cable (10 m) | | 1 | 1 | 1 | 1 |
| ⑥ | Main remote controller | | 1 | 1 | 1 | – |
| ⑦ | SD memory card | | 1 | 1 | 1 | 1 |

## 2.2 Choosing the FTC unit installation location

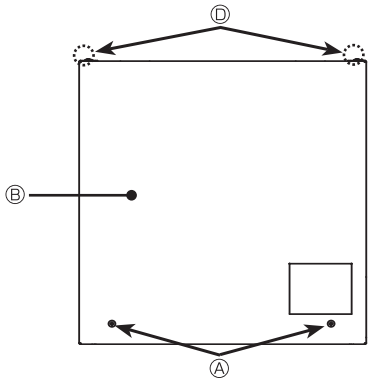


<Fig. 2.3.1>

- Do not install the FTC units outdoors as it is designed for indoor installation only. (The FTC circuit board and casing are not waterproof.)
- Avoid locations where the unit is exposed to direct sunlight or other sources of heat.
- Select a location where easy wiring access to the power source is available.
- Avoid locations where combustible gases may leak, be produced, flow, or accumulate.
- Select a level location that can bear the weight and vibration of the unit.
- Avoid locations where the unit is exposed to oil, steam, or sulfuric gas.
- Do not install in location that is hot or humid for long periods of time.

## 2.3 Installing the FTC unit (Fig. 2.3.1, 2.3.2, 2.3.3, 2.3.4)

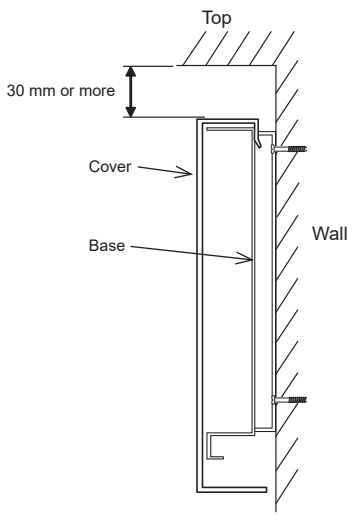


**<Fig. 2.3.2>**
Service space

1. Remove 2 screws (Ⓐ Screw) from FTC unit and remove the cover. (See Fig. 2.3.4)
2. Install the 4 screws (locally supplied) in the 4 holes (Ⓒ Hole).
   Note: To prevent the unit from falling off the wall, select the appropriate screws (locally supplied) and secure the base horizontally to the appropriate wall location.
   (See Fig. 2.3.2)

Ⓐ Screw Ⓑ Cover
Ⓒ Hole for installation Ⓓ Screw

Note: Do not remove the screws Ⓓ as the screws are the component parts of the cover and are not used for the installation of cover.

| | | |
|---|---|---|
| Weight | PAC-IF071B-E | 3.7 kg |
| | PAC-IF072/073B-E | 4.1 kg |
| | PAC-SIF051B-E | 1.9 kg |
| Allowable ambient temperature | | 0 to 35°C |
| Allowable ambient humidity | | 80% RH or less |

**Optional extras**
- Wireless Remote Controller PAR-WT50R-E
- Wireless Receiver PAR-WR51R-E
- Remote sensor PAC-SE41TS-E



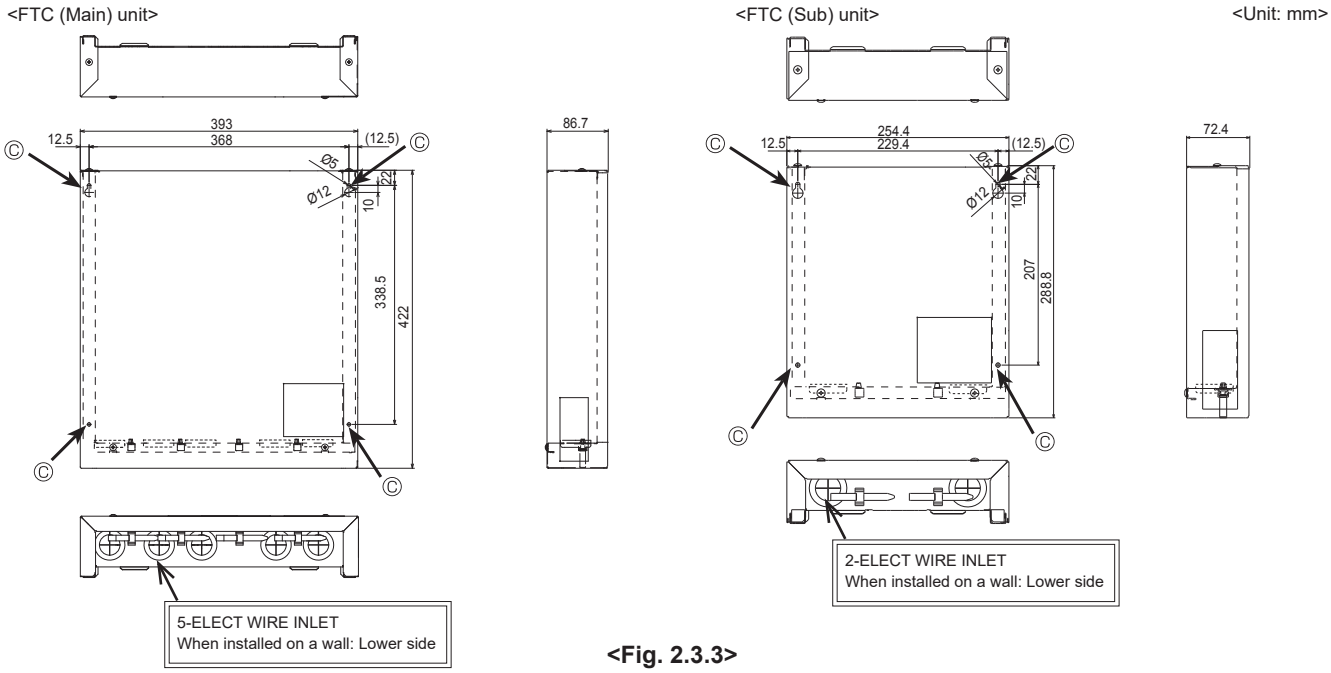


**<Fig. 2.3.3>**

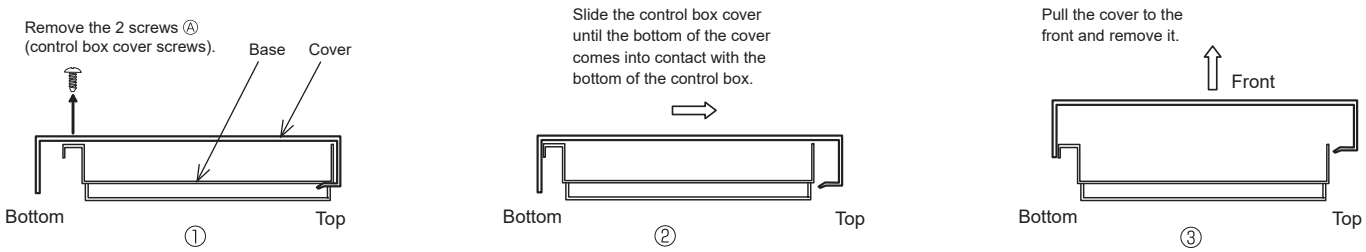


**<Fig. 2.3.4>**

The FTC (Main) is designed for use with a number of heat pump systems. Please refer to the following table to find the relevant installation information for your system.
For multiple outdoor units control with FTC (Sub), see section 9.

## 3.1 First step (Electrical work)

| Power supplies | System diagram | Reference section |
|---|---|---|
| FTC (Main) powered via outdoor unit | 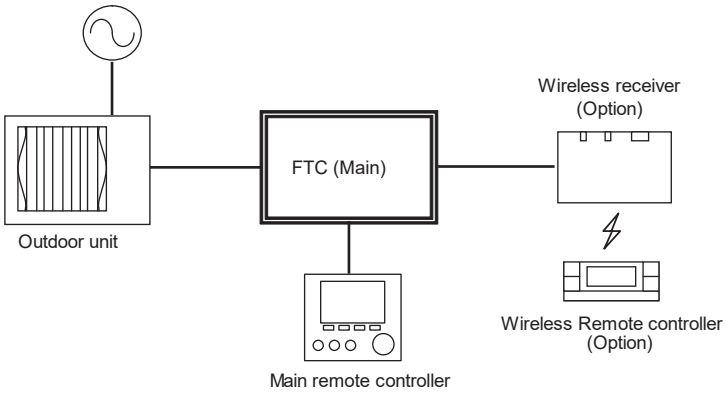 | 4.1<br>4.2 |
| FTC (Main) powered by independent source | 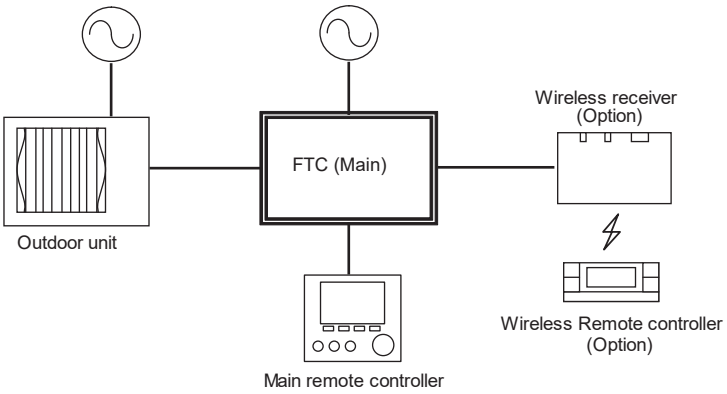 | 4.1<br>4.2 |

## 3.2 Second step (Outdoor unit type)

| Outdoor unit type | System diagram | Thermistor | Reference section |
|---|---|---|---|
| Split | 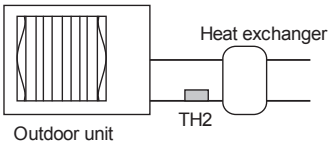 | TH2: Liquid refrigerant temp. | 4.4<br>5.2 |
| Packaged | 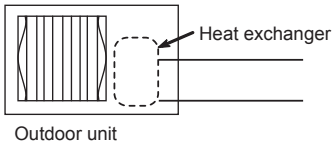 | — | 4.4<br>5.2 |

* PAC-IF072/073B-E is not available for Split-type system.

## 3.3 Third step (Functions setting)

| DHW tank | Immersion heater | Booster heater | BH function | System diagram | Thermistor | Reference section | Remarks |
|---|---|---|---|---|---|---|---|
| Present | Absent | Present | For heating and DHW | 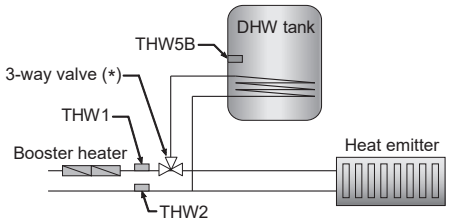 | THW1: Flow water temp.<br>THW2: Return water temp.<br>THW5B: Tank water temp. | 4.4<br>4.5<br>5.3 | |
| Present | Present | Present | For heating and DHW | 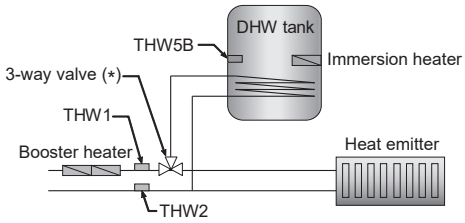 | THW1: Flow water temp.<br>THW2: Return water temp.<br>THW5B: Tank water temp. | 4.4<br>4.5<br>5.3 | |
| Present | Absent | Present | For heating only | 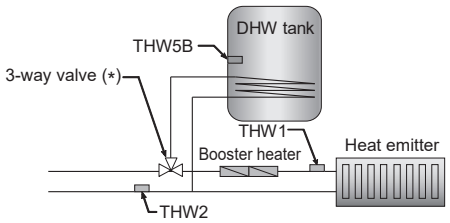 | THW1: Flow water temp.<br>THW2: Return water temp.<br>THW5B: Tank water temp. | 4.4<br>4.5<br>5.3 | 1. 'Legionella Prevention Mode' cannot be selected in this system. |
| Present | Absent | Absent | — | 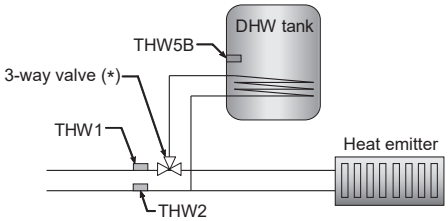 | THW1: Flow water temp.<br>THW2: Return water temp.<br>THW5B: Tank water temp. | 4.4<br>4.5<br>5.3 | 1. 'Legionella Prevention Mode' cannot be selected in this system.<br>2. Please make sure water circuit not to get frozen during defrost. |
| Present | Present | Present | For heating only | 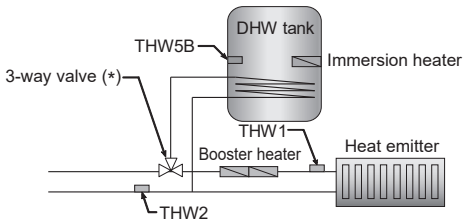 | THW1: Flow water temp.<br>THW2: Return water temp.<br>THW5B: Tank water temp. | 4.4<br>4.5<br>5.3 | |
| Present | Present | Absent | — | 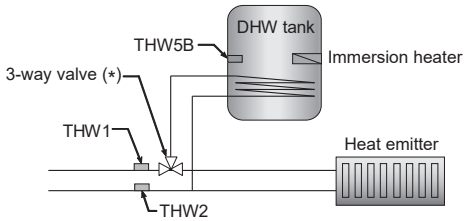 | THW1: Flow water temp.<br>THW2: Return water temp.<br>THW5B: Tank water temp. | 4.4<br>4.5<br>5.3 | |
| Absent | Absent | Present | — | 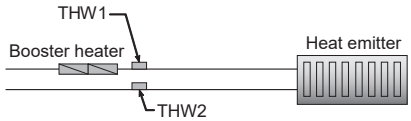 | THW1: Flow water temp.<br>THW2: Return water temp. | 4.4<br>4.5<br>5.3 | |
| Absent | Absent | Absent | — | 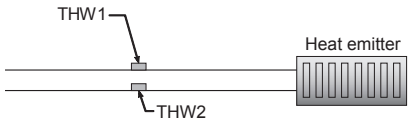 | THW1: Flow water temp.<br>THW2: Return water temp. | 4.4<br>4.5<br>5.3 | 1. Please make sure water circuit not to get frozen during defrost. |

* The use of two 2-way valves can perform same function as a 3-way valve.

## 3.4 Fourth step (Functions setting)

* Make sure to check the followings for your safety when designing a system. These are the minimum requirement for the safe use of FTC unit.

<table>
<tr><th>Parts name</th><th>Requirement</th></tr>
<tr><td>Flow switch</td><td>It is required to protect system from the effects of insufficient flow.</td></tr>
<tr><td>Flow sensor</td><td>It is required to detect an error in flow rate.<br>(The operation is validated with SIKA VVX20.)<br>It is required for Energy monitor function.</td></tr>
<tr><td>Strainer /Magnetic filter (water circuit)</td><td>Provide it as required to protect parts from damages caused by iron particles/water/contamination (e.g. the position before pump and return part from emitters).</td></tr>
<tr><td>Pressure relief valve (Primary circuit side) (Sanitary water side)</td><td>It is required to protect system from reaching high pressure.<br>Select the operating pressure depending on water pressure in the circuit in normal use.<br>Note: Follow the national regulations.</td></tr>
<tr><td>3-way valve</td><td>Current: 0.1 A Max. (If over 0.1 A you must use a relay)<br>Power supply: 230 V AC<br>Connect earth cable, if there is one.<br>Type: SPST<br>Note: SPDT type can NOT be used.<br> 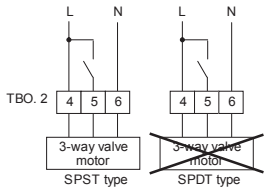 <br></td></tr>
<tr><td>2-way valve</td><td>Current: 0.1 A Max. (If over 0.1 A you must use a relay)<br>Power supply: 230 V AC<br>Connect earth cable, if there is one.<br>Type: Normally closed<br>Select the 2-way valve that slowly opens and shuts off to prevent water hammer.<br>A by-pass valve or circuit should be installed between pump and 2-way valve for safety (to release pressure when the both 2-way valves are closed).<br>Select a 2-way valve equipped with manual override, which is necessary for topping up or draining of water.</td></tr>
<tr><td>Water circulation pump</td><td>Current: 1.0A Max., Power supply: 230 V AC<br>When connecting a pump with an electric current of ≧ 1 A or multiple pumps, please note the following.<br>1. Use (a) relay(s).<br>2. When power is supplied from outdoor unit, TOTAL current (including the other parts) requirement MUST be ≦ 3 A. (otherwise, the fuse on the outdoor unit PCB will blow. )<br>3. When independent power supplies (i.e. from the FTC unit itself) , total current for the pump(s) is ≦ 4 A. (otherwise, the fuse on the FTC PCB will blow. )<br>Connect earth cable, if there is one.<br>Adjust the pump speed setting so that the flow rate in the primary circuit is appropriate for the outdoor unit installed see the table and figures below.
<table>
<tr><th colspan="2">Outdoor heat pump unit</th><th>Water flow rate range [L/min]</th></tr>
<tr><td rowspan="5">Packaged model</td><td>PUZ-WM50</td><td>6.5 to 14.3</td></tr>
<tr><td>PUZ-WM60</td><td>8.6 to 17.2</td></tr>
<tr><td>PUZ-WM85</td><td>10.8 to 24.4</td></tr>
<tr><td>PUZ-WM112</td><td>14.4 to 32.1</td></tr>
<tr><td>PUZ-HWM140</td><td>17.9 to 40.1</td></tr>
<tr><td rowspan="9">Split model</td><td>SUZ-SWM40</td><td>6.5 to 11.4</td></tr>
<tr><td>SUZ-SWM60</td><td>7.2 to 17.2</td></tr>
<tr><td>SUZ-SWM80</td><td>7.8 to 21.5</td></tr>
<tr><td>PUHZ-SW75</td><td>10.2 to 22.9</td></tr>
<tr><td>PUHZ-SW100</td><td>14.4 to 32.1</td></tr>
<tr><td>PUHZ-SW120</td><td>20.1 to 36.9</td></tr>
<tr><td>PUHZ-SHW80</td><td>10.2 to 22.9</td></tr>
<tr><td>PUHZ-SHW112</td><td>14.4 to 32.1</td></tr>
<tr><td>PUHZ-SHW140</td><td>17.9 to 36.9</td></tr>
</table>
* The water velocity in pipes should be kept within certain limits of material to avoid erosion corrosion and excessive noise generation.<br>(e.g. Copper pipe: 1.5 m/s)</td></tr>
</table>

| Parts name | Requirement | |
|---|---|---|
| Booster heater | General | * Consider necessity and capacity of booster heater to meet the following points.<br>(1) Heating capacity and flow water temperature should always be sufficient.<br>(2) System can increase the temperature of the stored water in tank to inhibit legionella bacterium growth.<br>(Note) System without neither booster heater or immersion heater, 'Legionella Prevention Mode' is NOT available.<br>(3) Water circuit should not be frozen during defrost operation. |
| | Control Power for Contactor | Current: 0.5A Max. , Power supply: 230V AC<br>* Use a relay. |
| | Separate power for Heater | Install an earth leakage circuit breaker (ECB) for heater, separate from control power (See Fig.1 and Fig.2).<br>* When using two booster heaters, booster heater 1 capacity must be less than that of booster heater 2.<br>When using a single booster heater, connect to BH1 (TBO.5 5-6 (OUT6)) , and turn the Dip SW2-3 to ON. (Booster heater capacity restriction) |

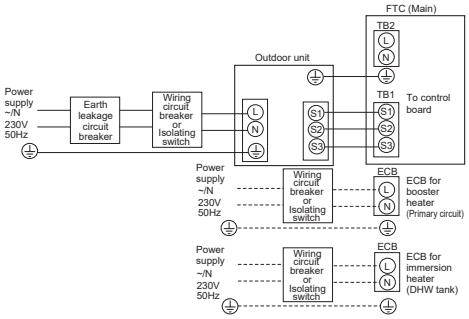


<Fig. 1 (1 phase)>

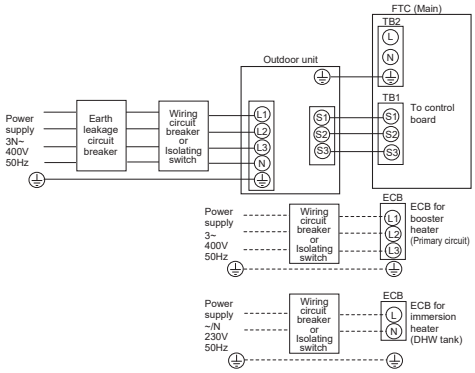


<Fig. 2 (3 phase)>

Heater capacity/Breaker/wiring (recommended)

<1 Phase>

| Description | Power supply | Total capacity (BH1 + BH2) | Breaker | Wiring |
|---|---|---|---|---|
| Booster heater (Primary circuit) | ~/N 230V 50Hz | 2 kW (2 kW + 0 kW) | 16 A | 2.5 mm² |
| | | 6 kW (2 kW + 4 kW) | 32 A | 6.0 mm² |

<3 Phase>

| Description | Power supply | Total capacity (BH1 + BH2) | Breaker | Wiring |
|---|---|---|---|---|
| Booster heater (Primary circuit) | 3~ 400V 50Hz | 9 kW (3 kW + 6 kW) | 16 A | 2.5 mm² |

* When installing a booster heater with the capacity of bigger than shown above, select an appropriate size breaker and cable (diameter) based on the maximum possible electric current.

| | | |
|---|---|---|
| | Safety device | (1) Use an overheat protection thermostat (manual reset type) (to detect unusual temperature increase/heating up without water).<br>Protection device operating temperature must be above 80°C. Protection device should not operate quickly, but water circuit must not boil even when heater(s) overshoot.<br>(Reference value) Thermostat operation temperature used in our Cylinder unit and Hydrobox : 90°C ± 4°C<br>(2) Connect a pressure relief valve on the primary circuit side. |
| Immersion heater | General | * Consider necessity and capacity of immersion heater to meet the following points.<br>(1) Heating capacity and flow water temperature should always be sufficient.<br>(2) System can increase the temperature of the stored water in tank to inhibit legionella bacterium growth.<br>(Note) System without neither booster heater or immersion heater can not select 'Legionella Prevention Mode'. |
| | Control Power for Contactor | Current: 0.5A Max. , Power supply: 230V AC<br>* Use a relay. |
| | Separate power for heater | Install an earth leakage circuit breaker (ECB) for heater, separate from control power (See Fig.1 and Fig.2).<br>*ECB is built-in in PAC-IF072/073B-E.<br>Heater capacity/Breaker/wiring (recommended) |

<1 Phase>

| Description | Power supply | Capacity | Breaker | Wiring |
|---|---|---|---|---|
| Immersion heater (DHW tank) | ~/N 230V 50Hz | 3 kW | 16 A | 2.5 mm² |

* When installing an immersion heater with the capacity of bigger than shown above, select an appropriate size breaker and cable (diameter) based on the maximum possible electric current.

| | | |
|---|---|---|
| | Safety device | (1) Install the thermistor THW5B (optional parts PAC-TH011TK2-E(5 m) or PAC-TH011TKL2-E(30 m)) on the DHW tank. Note that PAC-IF073B-E comes with THW5B. (Microcomputer detecting temperature for protection: 80°C)<br>(2) Use a built-in direct cut-off thermostat (manual reset type).<br>Protection device operating temperature must be above 80°C. Protection device should not operate quickly, but water circuit must not boil even when a heater overshoots.<br>(Reference value) Thermostat operation temperature used in our Cylinder unit : 85°C ± 5°C<br>(3) Connect a pressure relief valve on the sanitary water side. |
| Mixing valve | | Current: 0.1 A Max. (If over 0.1 A you must use a relay)<br>Power supply: 230V AC<br>Connect earth cable, if there is one.<br>Type: Refer to the right figure. |

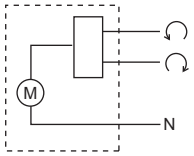


Mixing valve

| | |
|---|---|
| Expansion Vessel (Primary circuit side)<br>Expansion Vessel (Sanitary water side) | When the water circuit is closed, select the expansion vessel according to water quantity of the water circuit.<br>* Follow the national regulations. |
| Limits of TOTAL electric current when connecting local supply parts | Option 1. (Power supply from outdoor unit)<br>TOTAL current requirement MUST be ≦ 3A. (otherwise, the fuse on the outdoor unit PCB will blow.)<br>Option 2. (Independent power supply (i.e. from the FTC unit itself))<br>TOTAL current of the pump(s) MUST be ≦ 4A.<br>The total current allowed for parts except pumps is ≦ 3A. (otherwise, the fuse on the FTC PCB will blow. ) |

## 3.5 Local system

### 1-zone temperature control

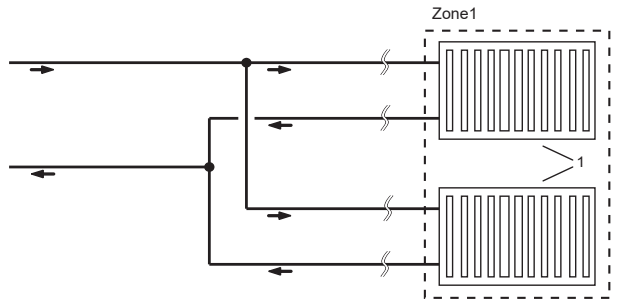


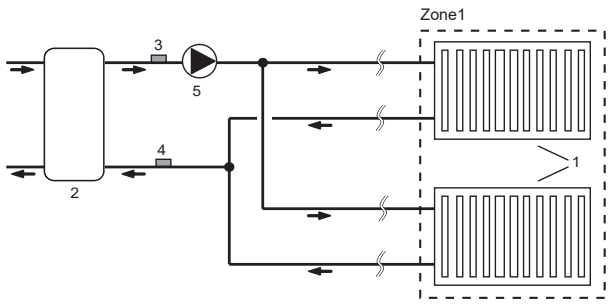


### 2-zone temperature control

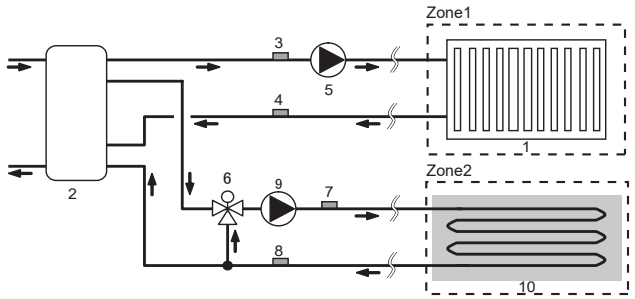


### 1-zone temperature control with boiler

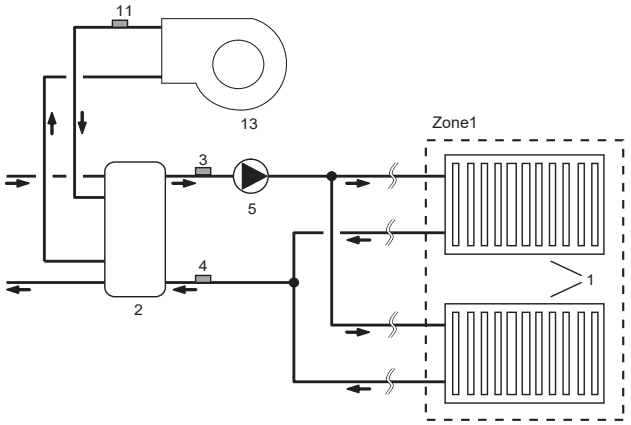


### 2-zone temperature control & Buffer tank control

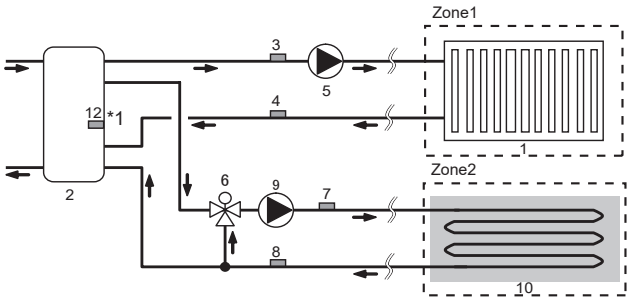


### 1-zone temperature control (2-zone valve ON/OFF control)

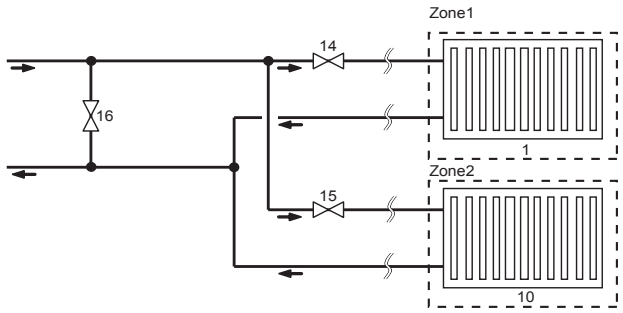


1. Zone1 heat emitters (e.g. radiator, fan coil unit) (local supply)
2. Mixing tank (local supply)
3. Zone1 flow water temp. thermistor (THW6) } Optional part : PAC-TH011-E
4. Zone1 return water temp. thermistor (THW7)
5. Zone1 water circulation pump (local supply)
6. Motorized mixing valve (local supply)
7. Zone2 flow water temp. thermistor (THW8) } Optional part : PAC-TH011-E
8. Zone2 return water temp. thermistor (THW9)
9. Zone2 water circulation pump (local supply)
10. Zone2 heat emitters (e.g. underfloor heating) (local supply)
11. Boiler flow water temp. thermistor (THWB1) } Optional part : PAC-TH012HT(L)-E
12. Mixing tank thermistor (THW10) *1
13. Boiler (local supply)
14. Zone1 2-way valve (local supply)
15. Zone2 2-way valve (local supply)
16. Bypass valve (local supply)

*1 ONLY Buffer tank control (heating/cooling) applies to "Smart grid ready".

## 3.6 Minimum amount of water required in the space heating/cooling circuit

| Outdoor heat pump unit | | *Total required water amount [L] | |
|---|---|---|---|
| | | Average / Warmer climate** | Colder climate** |
| Packaged model | PUZ-WM50 | 7 | 29 |
| | PUZ-WM60 | 9 | 34 |
| | PUZ-WM85 | 12 | 37 |
| | PUZ-WM112 | 16 | 48 |
| | PUZ-HWM140 | 20 | 60 |
| Split model | SUZ-SWM40 | 6 | 17 |
| | SUZ-SWM60 | 7 | 26 |
| | SUZ-SWM80 | 9 | 34 |
| | PUHZ-SW75 | 11 | 32 |
| | PUHZ-SW100 | 14 | 43 |
| | PUHZ-SW120 | 17 | 52 |
| | PUHZ-SW160 | 23 | 69 |
| | PUHZ-SW200 | 29 | 86 |
| | PUHZ-SHW80 | 11 | 34 |
| | PUHZ-SHW112 | 16 | 48 |
| | PUHZ-SHW140 | 20 | 60 |
| | PUHZ-SHW230 | 33 | 99 |

<Table 3.6.1>

* If there is a bypass circuit, above table means minimum water amount in case of bypass.
** Please refer to 2009/125/EC: Energy-related Products Directive and Regulation (EU) No 813/2013 to confirm your climate zone.

Case 1. No division between primary and secondary circuit
- Please ensure the required water amount according to the table 3.6.1 by water pipe and radiator or underfloor heating.

Case 2. Separate primary and secondary circuit
- If the interlock operation of primary and secondary pump is not available, please ensure required additional water in only primary circuit according to the table 3.6.1.
- If the interlock operation of primary and secondary pump is available, please ensure total water amount of primary and secondary circuit according to the table 3.6.1.

In case of the shortage of required water amount, please install buffer tank.

## 3.7 Energy monitor *3

End user can monitor accumulated*1 'Consumed electric energy' and 'Delivered heat energy' in each operation mode*2 on the main remote controller.
*1 Monthly and Year to date
*2 - DHW operation
- Space heating
- Space cooling

*3 Not available during Multiple outdoor unit control.

Refer to "7.2 Main remote controller" for how to check the energy, and "5.1 DIP switch functions" for the details on DIP-SW setting.
Either one of the following two method is used for monitoring.
**Note: The method 1 should be used as a guide. If a certain accuracy is required, the method 2 should be used.**

1. Calculation internally
   Electricity consumption is calculated internally based on the energy consumption of outdoor unit, electric heater, water pump(s) and other auxiliaries.
   Delivered heat is calculated internally by multiplying delta T (Flow and Return temp.) and flow rate measured by the locally supplied sensors.
   Set the electric heater capacity and water pump(s) input according to indoor unit model and specs of additional pump(s) supplied locally. (Refer to the menu tree in "7.2 Main remote controller")

| Booster heater1 | Booster heater2 | Immersion heater | Pump1 | Pump2 | Pump3 |
|---|---|---|---|---|---|
| 2kW*1 | 4kW*1 | 0kW*1 | *** *1 | 0W*1 | 0W*1 |

<Table 3.7>

*1 Be sure to change the setting corresponding to the specification of locally supplied auxiliaries such as electric heater and pump.

When anti-freeze solution (propylene glycol) is used for primary water circuit, set the delivered energy adjustment if necessary.
For further detail of above, refer to "7.2 Main remote controller".

2. Actual measurement by external meter (locally supplied)
   FTC has external input terminals for 2 'Electric energy meters' and a 'Heat meter'.
   If two 'Electric energy meters' are connected, the 2 recorded values will be combined at the FTC and shown on the main remote controller.
   (e.g. Meter 1 for H/P power line, Meter 2 for heater power line)
   Refer to the [Signal inputs] section in "4.5 Connecting inputs/outputs" for more information on connectable electric energy meter and heat meter.

## 4.1 Electrical connection

All electrical work should be carried out by a suitably qualified technician. Failure to comply with this could lead to electrocution, fire, and death. It will also invalidate product warranty. All wiring should be according to national wiring regulations.
For multiple outdoor units control with FTC (Sub), see section 9.

FTC (Main) can be powered in two ways.
1. Power cable is run from the outdoor unit to FTC (Main).
2. FTC (Main) has independent power source.

Connections should be made to the terminals indicated in the following figures depending on the phase.

| Breaker abbreviation | Meaning |
|---|---|
| ECB | Earth leakage circuit breaker for immersion heater |
| TB1 | Terminal bed 1 |
| TB2 | Terminal bed 2 |

Immersion heater should be connected independently from one another to dedicated power supplies.

**Notes: 1. Do not run the low voltage cables through a slot that the high voltage cables go through.**
**2. Do not run other cables except low voltage cables through a slot that the wireless receiver's cable goes through.**
**3. Do not bundle power cables together with other cables.**
**4. Bundle cables as figure above by using clamps.**

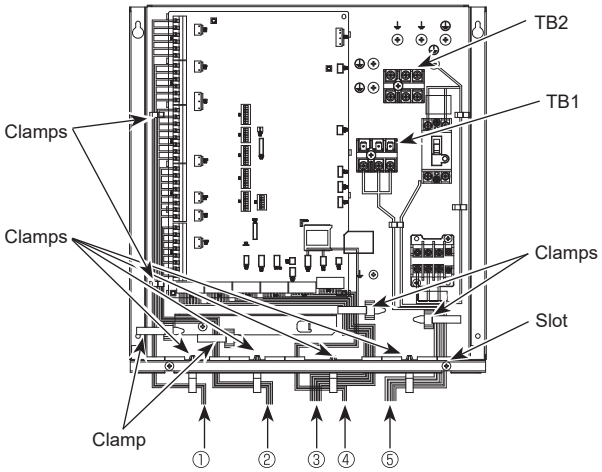


① High voltage cables (OUTPUT)
② High voltage cables (OUTPUT)
③ Low voltage cables (INPUT) and wireless receiver's cable
④ Thermistor cables
⑤ Power cables

**<Fig. 4.1.1> Wiring for PAC-IF07*B-E**

Option 1: FTC (Main) powered via outdoor unit

**<1 phase>**

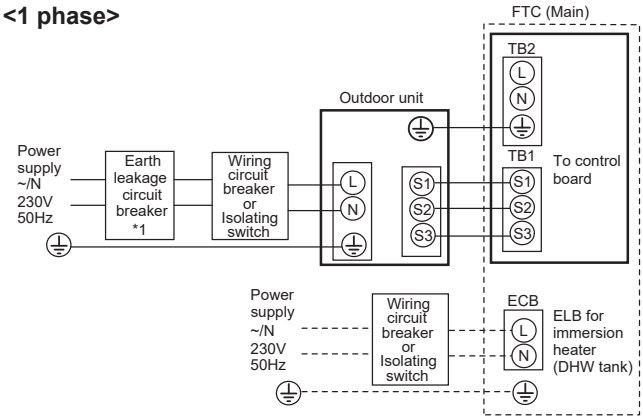


**<3 phase>**

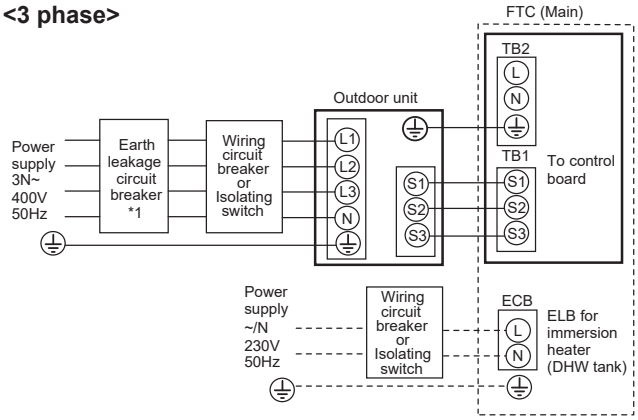


: PAC-IF071B-E
: PAC-IF072/073B-E

**<Fig. 4.1.2>**
Electrical connections 1 phase/3 phase

*1. If the installed earth leakage circuit breaker does not have an over-current protection function, install a breaker with that function along the same power line.
A breaker with at least 3.0 mm contact separation in each pole shall be provided. Use earth leakage breaker (NV).
The breaker shall be provided to ensure disconnection of all active phase conductors of the supply.

**Note: In accordance with IEE regulations the circuit breaker/isolating switch located on the outdoor unit should be installed with lockable devices (health and safety).**

| | | | |
|---|---|---|---|
| Wiring Wiring No. × size (mm²) | FTC (Main) - Outdoor unit | *2 | 3 × 1.5 (polar) |
| | FTC (Main) - Outdoor unit earth | *2 | 1 × Min. 1.5 |
| Circuit rating | FTC (Main) - Outdoor unit S1 - S2 | *3 | 230V AC |
| | FTC (Main) - Outdoor unit S2 - S3 | *3 | 24V DC |

*2. Max. 45 m
If 2.5 mm² used, Max. 50 m
If 2.5 mm² used and S3 separated, Max. 80 m
*3. The values given in the table above are not always measured against the ground value.

**Notes: 1. Wiring size must comply with the applicable local and national codes.**
**2. FTC (Main)/outdoor unit connecting cords shall not be lighter than polychloroprene sheathed flexible cord. (Design 60245 IEC 57)**
**FTC (Main) power supply cords shall not be lighter than polychloroprene sheathed flexible cord. (Design 60227 IEC 53)**
**3. Install an earth longer than other cables.**
**4. Please keep enough output capacity of power supply for each individual heater. Insufficient power supply capacity might cause chattering.**

## Option 2: FTC (Main) powered by independent source

If FTC (Main) and outdoor units have separate power supplies, the following requirements MUST be carried out:

- **FTC (Main) unit electrical box connector connections changed. (see Fig. 4.1.3)**
- **Outdoor unit DIP switch settings changed to SW8-3 ON.**
- **Turn on the outdoor unit before the FTC (Main).**
- **Power by independent source is not available for particular models of outdoor unit model.**
  **For more detail, refer to the connecting outdoor unit installation manual.**

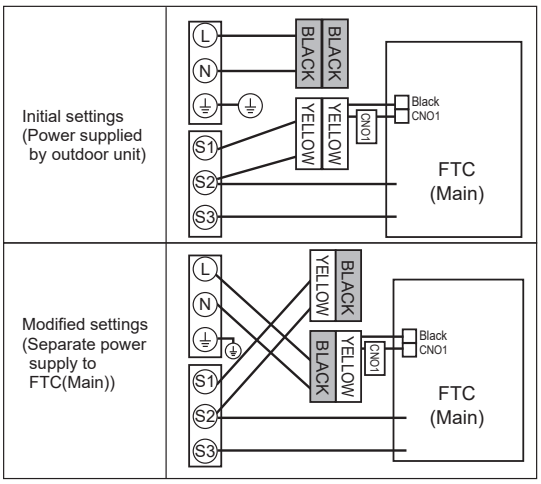


**<Fig. 4.1.3>**

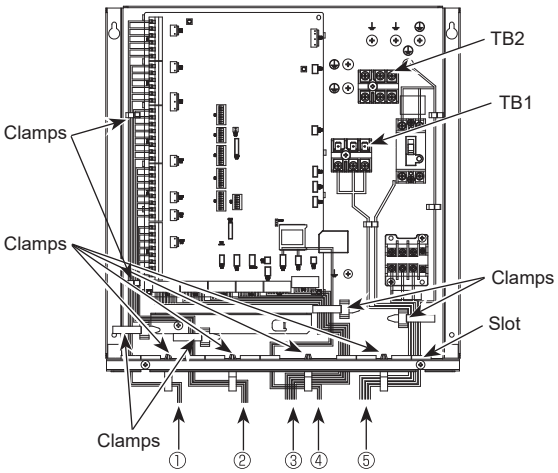


① High voltage cables (OUTPUT)
② High voltage cables (OUTPUT)
③ Low voltage cables (INPUT) and wireless receiver's cable
④ Thermistor cables
⑤ Power cables

**<Fig. 4.1.4> Wiring for PAC-IF07*B-E**

**Notes: 1. Do not run the low voltage cables through a slot that the high voltage cables go through.**
**2. Do not run other cables except low voltage cables through a slot that the wireless receiver's cable goes through.**
**3. Do not bundle power cables together with other cables.**
**4. Bundle cables as figure above by using clamps.**

**<1 phase>**

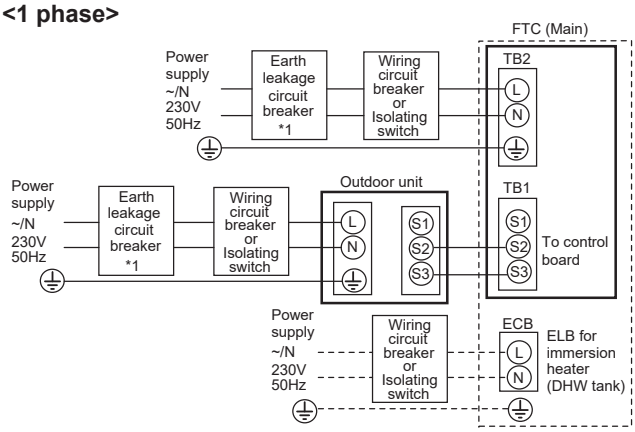


**<3 phase>**

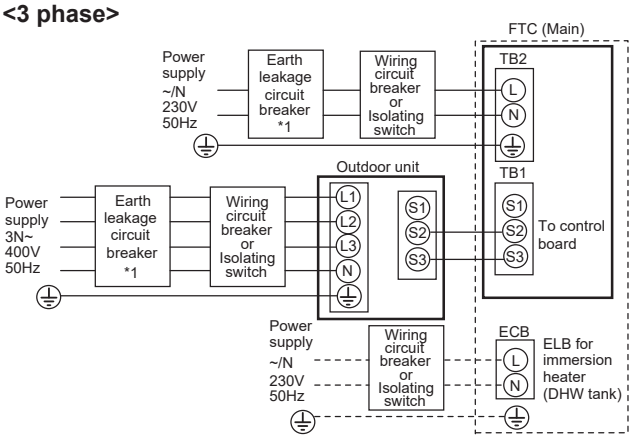


: PAC-IF071B-E

: PAC-IF072/073B-E

**<Fig. 4.1.5>**
Electrical connections 1 phase/3 phase

*1. If the installed earth leakage circuit breaker does not have an over-current protection function, install a breaker with that function along the same power line.
A breaker with at least 3.0 mm contact separation in each pole shall be provided. Use earth leakage breaker (NV).
The breaker shall be provided to ensure disconnection of all active phase conductors of the supply.

**Note: In accordance with IEE regulations the circuit breaker/isolating switch located on the outdoor unit should be installed with lockable devices (health and safety).**

| | | | |
|---|---|---|---|
| FTC (Main) power supply | | | ~/N 230 V 50 Hz |
| FTC (Main) input capacity Main switch (Breaker) | | *1 | 16 A |
| Wiring Wiring No. × size (mm²) | FTC (Main) power supply | | 2 × Min. 1.5 |
| | FTC (Main) power supply earth | | 1 × Min. 1.5 |
| | FTC (Main) - Outdoor unit | *2 | 2 × Min. 0.3 |
| | FTC (Main) - Outdoor unit earth | | — |
| Circuit rating | FTC (Main) L - N | *3 | 230V AC |
| | FTC (Main) - Outdoor unit S1 - S2 | *3 | — |
| | FTC (Main) - Outdoor unit S2 - S3 | *3 | 24V DC |

*2. Max. 120 m
*3. The values given in the table above are not always measured against the ground value.

**Notes: 1. Wiring size must comply with the applicable local and national codes.**
**2. FTC (Main) unit/outdoor unit connecting cords shall not be lighter than polychloroprene sheathed flexible cord. (Design 60245 IEC 57) FTC (Main) unit power supply cords shall not be lighter than polychloroprene sheathed flexible cord. (Design 60227 IEC 53)**
**3. Install an earth longer than other cables.**
**4. Please keep enough output capacity of power supply for each individual heater. Insufficient power supply capacity might cause chattering.**

## 4.2 Connecting the main remote controller

### 4.2.1 Connect the main remote controller cable to FTC (Main)

Connect the main remote controller cable to 1 and 2 on the terminal block (TBI. 6) on the FTC (Main) controller. <Fig. 4.2.1>

Wiring wire No. × size (mm²): 2 × 0.3 (non polar)

The 10 m wire is attached as an accessory. Max. 500 m

Wiring size must comply with the applicable local and national codes.

Circuit rating: 12V DC

Circuit rating is NOT always against the ground.

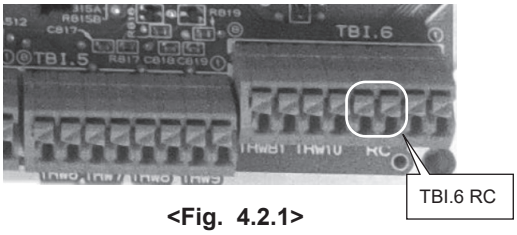


**<Fig. 4.2.1>**

**Location to place the main remote controller**

When using the Remote controller options (refer to section 4.3), place the main remote controller on appropriate location that meets the following points to detect room temperature.

- Do not place the main remote controller in the periphery of a door or a window.
- Do not place the main remote controller near heat or cold sources, such as a radiator or the like.

**Notes:**

**Wiring for main remote controller cable shall be (5 cm or more) apart from power source wiring so that it is not influenced by electric noise from power source wiring. (Do not insert main remote controller cable and power source wiring in the same conduit.) (Refer to Fig. 4.1.1)**

**Stranded wire should be processed with insulation-covered bar terminal (DIN46228-4 standard compatible type).**

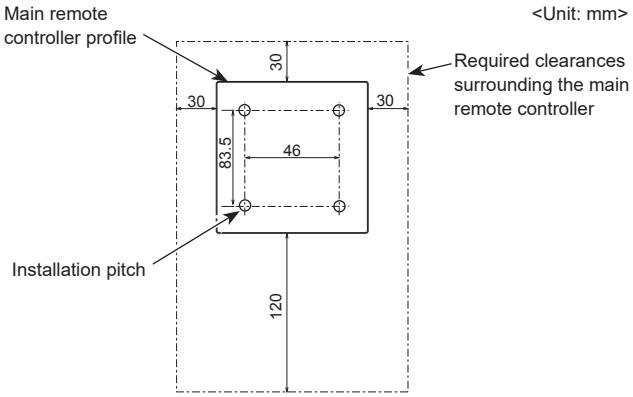


**<Fig. 4.2.2>**

### 4.2.2 Installing the main remote controller

1. The main remote controller can be installed either in the switch box or directly on the wall. Perform the installation properly according to the method.
   (1) Secure clearances shown in <Fig. 4.2.2> regardless of whether installing the main remote controller either directly on the wall or in the switch box.
   (2) Prepare the following items in the field.
   Double switch box
   Thin metal conduit
   Locknut and bushing
   Cable cover
   Wall plug

2. Drill an installation hole in the wall.
   ■ Installation using a switch box
   - Drill a hole in the wall for the switch box, and install the switch box in the hole.
   - Fit the conduit tube into the switch box.

   ■ Direct wall installation
   - Drill a cable access hole and thread the main remote controller cable through it.

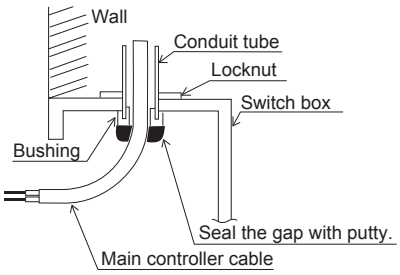


**<Fig. 4.2.3>**

⚠ **Caution:**

**To prevent entry of dew, water, and insects, seal the gap between the cable and the hole through which the cable is threaded with putty. Otherwise, electric shock, fire, or failure may result.**

3. Have the main remote controller ready.
   Remove the bottom case from the main remote controller.

4. Connect the main remote controller cable to the terminal block on the bottom case.
   Modify the main remote controller cable as shown in <Fig. 4.2.5>, and thread the cable from behind the bottom case.
   Completely thread the cable to the front so that the unsheathed part of the cable cannot be seen behind the bottom case.
   Connect the main remote controller cable to the terminal block on the bottom case.

   ■ Direct wall installation
   - Seal the gap between the cable and the hole through which the cable is threaded.

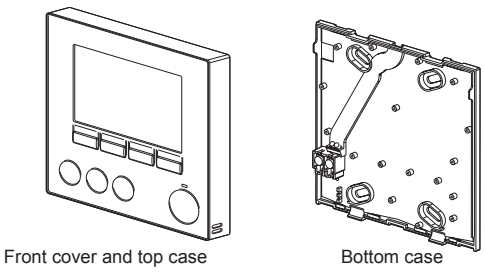


**<Fig. 4.2.4>**

⚠ **Caution**

**To prevent electric shock or failure, keep the sheath ends or any other foreign objects out of the terminal block.**

**Do not use ring terminals to connect the wires to the terminal block on the bottom case. The terminals will come in contact with the control board and the front cover, which will result in failure.**

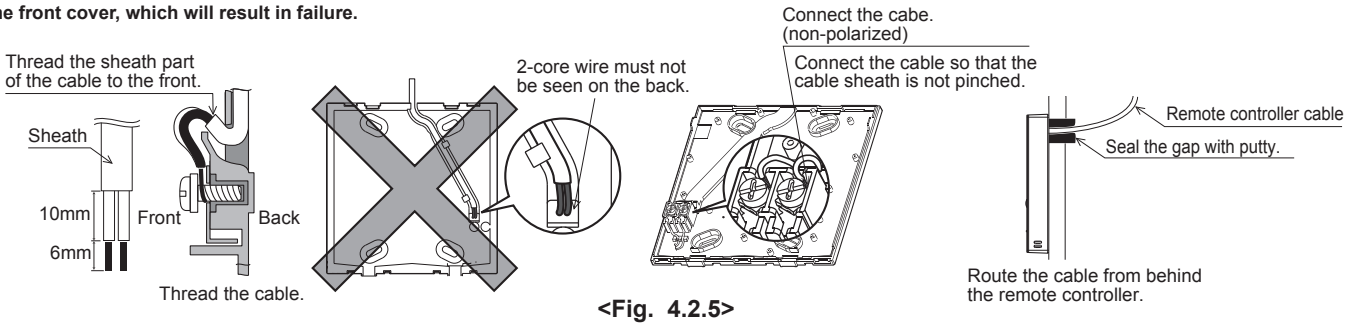


**<Fig. 4.2.5>**

5. Install the bottom case.
   ■ Installation using a switch box
   • When installing the bottom case in the switch box, secure at least two corners of the switch box with screws.

■ Direct wall installation
• Thread the cable through the slot provided.
• When mounting the bottom case on the wall, secure at least two corners of the main remote controller with screws.
• To prevent the bottom case from lifting, use top-left bottom-right corners of the main remote controller (viewed from the front) to secure the bottom case to the wall with wall plugs or the like.

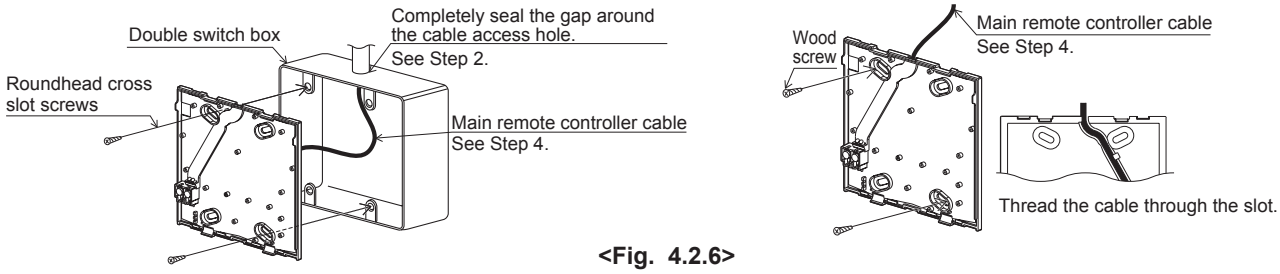


<Fig. 4.2.6>

⚠ **Caution:**
**To avoid causing deformation or cracks to the main remote controller, do not overtighten the screws and make an additional installation hole(s).**

6. Cut out the cable access hole.
   ■ Direct wall installation
   • Cut out the knockout hole (indicated with grey in <Fig. 4.2.7>) in the front cover by knife or nipper.
   • Thread the main remote controller cable from the slot behind the bottom case through this access hole.

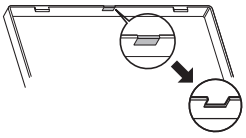

<Fig. 4.2.7>

7. Plug the lead wire cable into the top case.
   Plug the lead wire cable coming from the bottom case into the top case.

⚠ **Caution:**
**To avoid failures, do not remove the controller board protective sheet and the controller board from the top case.**
**After the cable is plugged into the top case, do not hang the top case as shown in <Fig. 4.2.8>. Otherwise, the main remote controller cable could sever, which could cause malfunction to the main remote controller.**

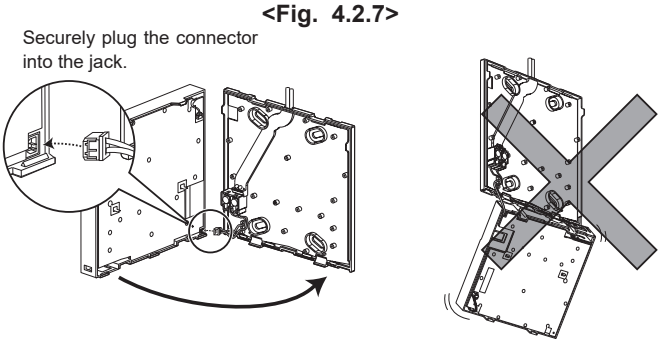


<Fig. 4.2.8>

8. Fit the lead wires into the clamps.

⚠ **Caution:**
**Hold the wires in place with clamps to prevent excessive strain from being applied on the terminal block and causing cable breakage.**

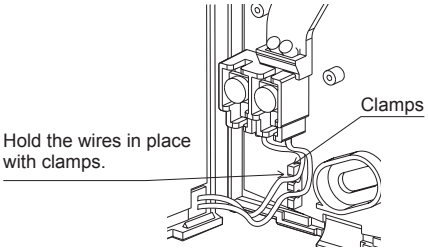


<Fig. 4.2.9>

9. Fit the top case and the front cover onto the bottom case.
   The top case assembly (fitted with the front cover at factory shipment) has two tabs on top. Hook the tabs onto the bottom case and snap the top case onto the bottom case into place. Check that the cover is securely installed.

⚠ **Caution:**
**When the top case is correctly attached to the bottom case a click is heard. If the front cover is not clicked into place it may fall off.**

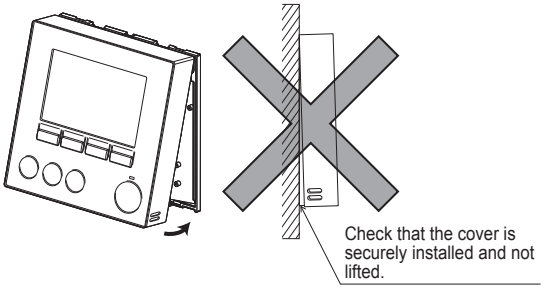


**<Fig. 4.2.10>**

■ Direct wall installation (when routing the main remote controller cable along the wall surface)
- Thread the main remote controller cable through the cable access hole at the top of the main remote controller.
- Seal the gap between the cable and the access hole with putty.
- Use a cable cover.

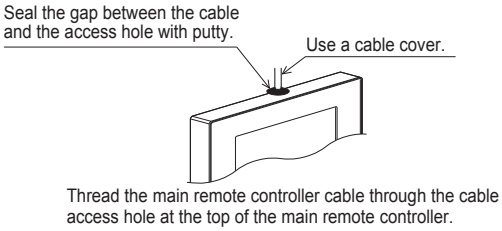


**<Fig. 4.2.11>**

■ Disassembling the top case and the front cover

(1) Remove the front cover.
   Insert a flat head screwdriver into either of two open slots at the bottom of the main remote controller and move the screwdriver handle downward as shown. The engagement of the tabs will be released. Then pull the front cover toward the front to remove the front cover.

(2) Remove the top case.
   Insert a flat head screwdriver into either of two open slots at the bottom of the main remote controller. The subsequent procedure is the same as that of the front cover.

⚠ **Caution:**
**Use a 5 mm- flat head screwdriver. Do not turn the screwdriver forcibly while placing the blade in the slots. Doing so could break the covers.**

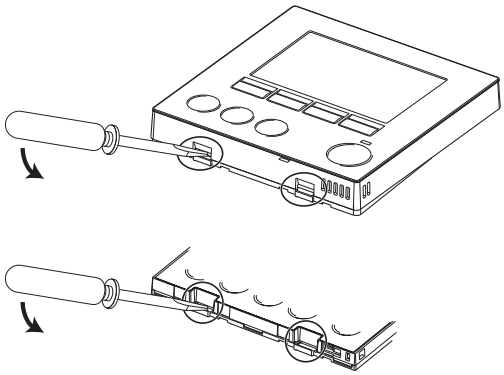

**<Fig. 4.2.12>**

## 4.3 Main Remote Controller Options

The FTC (cased) comes factory fitted with a main remote controller. This incorporates a thermistor for temperature monitoring and a graphical user interface to enable set-up, view current status and input scheduling functions. The main remote controller is also used for servicing purposes. This facility is accessed via password protected service menus.

To provide the best efficiency Mitsubishi Electric recommends using automatic adaptation function based on room temperature. To use this function a room thermistor needs to be present in a main living area. This can be done in a number of ways the most convenient are detailed below.

**Refer to heating section of this manual for instructions on how to set compensation curve, flow temp. or room temp. (Auto adaptation).**

**For instructions on how to set the thermistor input for the FTC (Main) please refer to Initial settings section.**

The factory setting for space heating mode is set to Room temp. (auto adaptation). If there is no room sensor present in the system, this setting must be changed to either Compensation curve mode or Flow temp. mode.

**Note: Auto-adaptation is not available in Cooling mode.**

Factory supplied standard

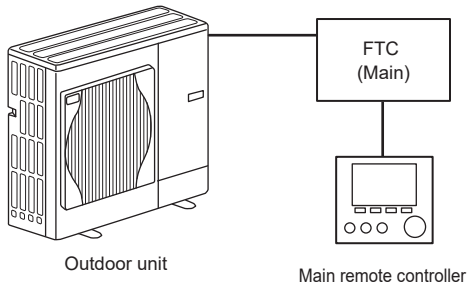


### ■ 1-zone temperature control

**Control option A**

This option features the main remote controller and the Mitsubishi Electric wireless remote controller. The wireless remote controller is used to monitor room temperature and can be used to make changes to the space heating settings, boost DHW (*1) and switch to holiday mode without having to directly use the main remote controller.

If more than one wireless remote controller is used, the most recently requested temperature setting will commonly be applied to all rooms by the central control system regardless of which wireless remote controller was used. No hierarchy exists across these remote controllers.

Wire the wireless receiver to FTC (Main) referring to the wireless remote controller instruction manual. **Turn DIP SW1-8 to ON.** Before operation configure the wireless remote controller to transmit and receive data referring to the wireless remote controller installation manual.

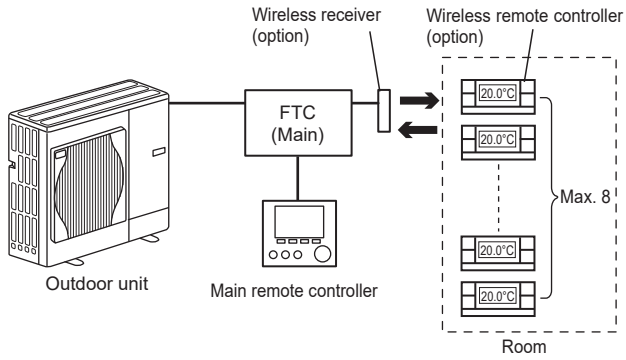


**Control option B**

This option features the main remote controller and the Mitsubishi Electric thermistor wired to FTC (Main). The thermistor is used to monitor room temperature but can not make any changes in control operation. Any changes to DHW (*1) must be made using the main remote controller mounted on the FTC (Main).

Wire the thermistor to the CN20 connector on FTC (Main).
The number of room temperature thermistors that can be connected to FTC (Main) is always one.

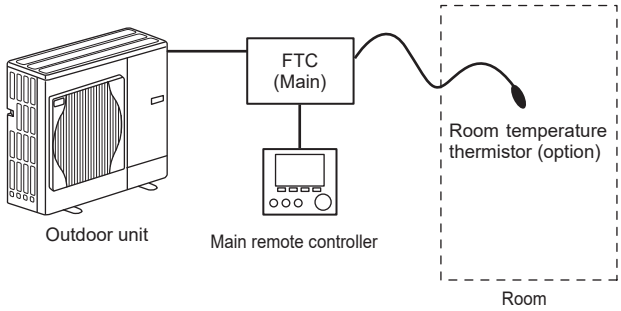


**Control option C**

This option features the main remote controller being removed from the FTC (Main) and situated in a different room. A thermistor built in the main remote controller can be used for monitoring the room temperature for Auto Adaptation function whilst keeping all its features of the main remote controller available.

The main remote controller and FTC (Main) are connected by a 2-core, 0.3 mm², non-polar cable (local supply) with a maximum length of 500 m.

To use the sensor in the main remote controller, the main remote controller should come off from the FTC (Main). Otherwise it will detect the temperature of the FTC (Main) instead of room temperature. This will affect the output of the space heating.

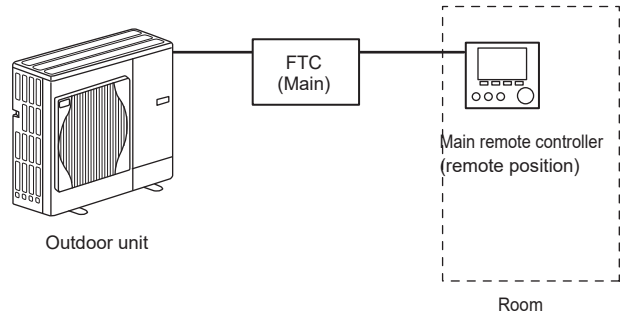


**Control option D (Flow temp. or compensation curve only)**

This option features the main remote controller and a locally supplied thermostat wired to FTC (Main). The thermostat is used to set the maximum temperature for heating room. Any changes to DHW (*1) must be made using main remote controller mounted on the FTC (Main).

The thermostat is wired to IN1 in TBI.1 on FTC (Main). The number of thermostats that can be connected to FTC (Main) is always one.

**The wireless remote controller can be also used as a thermostat.**

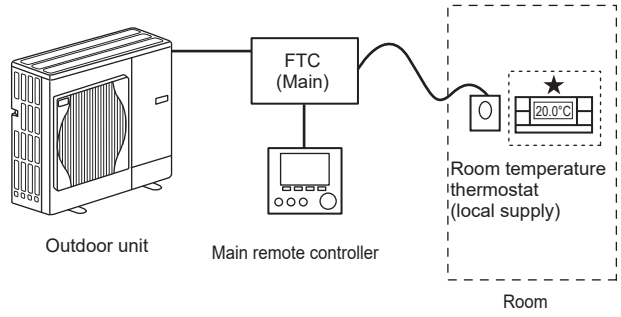


*1 If applicable

## ■ 2-zone temperature control

**Control option A**

This option features the main remote controller, the Mitsubishi Electric wireless remote controller and a locally supplied thermostat.
The wireless remote controller is used to monitor the Zone1 room temperature and the thermostat is used to monitor the Zone2 room temperature.
The thermostat can be also allocated to Zone1 and the wireless remote controller to Zone2.

The wireless remote controller can be also used to make changes to the space heating settings, boost DHW (*1) and switch to holiday mode without having to use the main remote controller.

If more than one wireless remote controller is used, the last temperature setting adjustment/demand will be applied to ALL rooms in same zone.

Wire the wireless receiver to FTC (Main) referring to the wireless remote controller instruction manual. Turn DIP SW1-8 to ON. Before operation configure the wireless remote controller to transmit and receive data referring to the wireless remote controller installation manual.
The thermostat is used to set the maximum temperature for heating Zone2 room.
The thermostat is wired to IN6 on FTC (Main). (If the thermostat is allocated to Zone1, it is wired to IN1 on TBI.1.) (Refer to 4.5.)

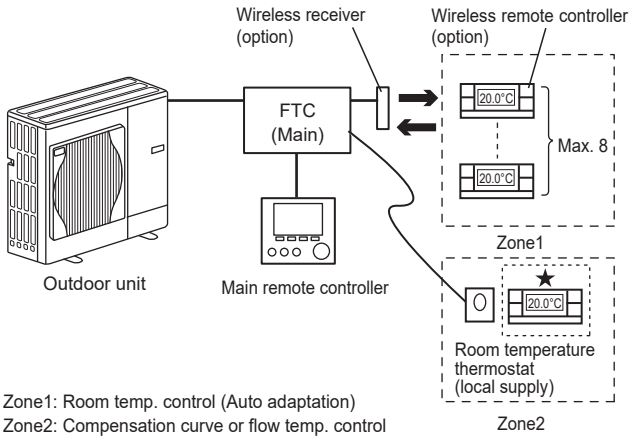


Zone1: Room temp. control (Auto adaptation)
Zone2: Compensation curve or flow temp. control

**Control option B**

This option features the main remote controller, the Mitsubishi Electric thermistor and a locally supplied thermostat that are wired to FTC (Main).
The thermistor is used to monitor the Zone1 room temperature and the thermostat is used to control the Zone2 room temperature.

The thermostat can be also allocated to Zone1 and the thermistor to Zone2.
The thermistor can not make any changes in control operation. Any changes to DHW (*1) must be made using the main remote controller mounted on the FTC (Main).
Wire the thermistor to the CN20 connector on FTC (Main).
The number of room temperature thermistors that can be connected to FTC (Main) is always one.
The thermostat is used to set the maximum temperature for heating Zone2 room.
The thermostat is wired to IN6 on FTC (Main). (If the thermostat is allocated to Zone1, wire it to IN1 on TBI.1.) (Refer to 4.5.)

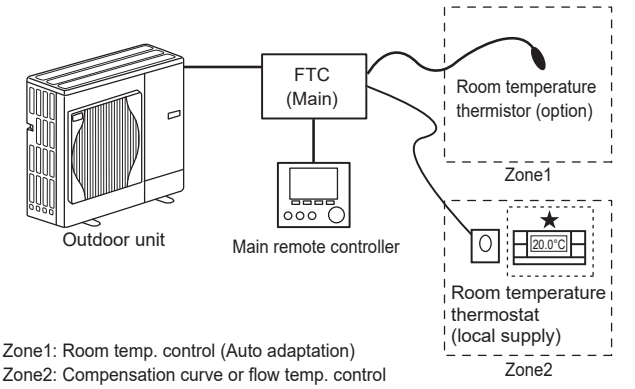


Zone1: Room temp. control (Auto adaptation)
Zone2: Compensation curve or flow temp. control

**Control option C**

This option features the main remote controller (with in-built thermistor) that is removed from the FTC (Main) to monitor the Zone1 room temperature and a locally supplied thermostat to monitor the Zone2 room temperature.
The thermostat can be also allocated to Zone1 and the thermistor to Zone2.

A thermistor built into the main remote controller can be used for monitoring the room temperature for Auto Adaptation function whilst keeping all its features of the main remote controller available.
The main remote controller and FTC (Main) are connected by a 2-core, 0.3 mm², non-polar cable (local supply) with a maximum length of 500 m.
To use the sensor in the main remote controller, the main remote controller should be detached from the FTC (Main). Otherwise it will detect the temperature of the FTC (Main) instead of room temperature. This will affect the output of the space heating.

The thermostat is used to set the maximum temperature for heating Zone2 room.
The thermostat is wired to IN6 on FTC (Main). (If the thermostat is allocated to Zone1, wire it to IN1 on TBI.1.) (Refer to 4.5.)

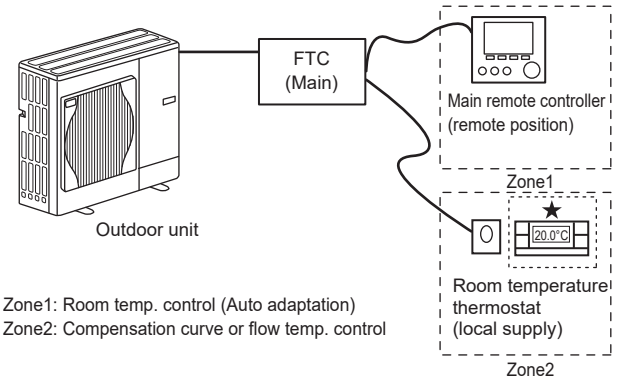


Zone1: Room temp. control (Auto adaptation)
Zone2: Compensation curve or flow temp. control

**Control option D**

This option features the locally supplied thermostats wired to FTC (Main). The thermostats are individually allocated to Zone1 and Zone2. The thermostats are used to set each maximum temperature for heating Zone1 and Zone2 rooms. Any changes to DHW (*1) must be made using the main remote controller mounted on the FTC (Main).

The thermostat for Zone1 is wired to IN1 in TBI.1 on FTC (Main).
The thermostat for Zone2 is wired to IN6 in TBI.1 on FTC (Main).

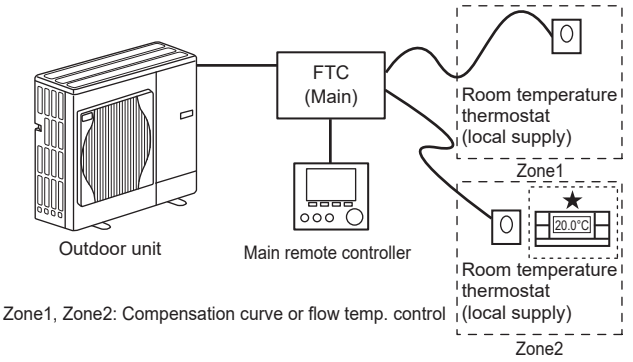


Zone1, Zone2: Compensation curve or flow temp. control

Note: For the options above, the sensor types can be exchanged between Zone1 and Zone2.
(e.g. Wireless remote controller in Zone1 and Room temp. thermostat in Zone2 can be changed to Room temp. thermostat and wireless remote controller, respectively).
*1 If applicable
★ **The wireless remote controller can be also used as a thermostat.**

## 4.4 Connecting the thermistor cables

Connect the thermistor for the FTC (Main) controller.
For multiple outdoor units control with FTC (Sub), see section 9.

### 4.4.1 Connecting the room temp. thermistor (TH1) cable

TH1 is an optional part (PAC-SE41TS-E).
TH1 is required to use the auto adaptation function. However, when room temperature detection is conducted by the main remote controller or the wireless remote controller (optional), this part is not required.
Connect the TH1 cable to the CN20 connector on FTC (Main).
When the TH1 cable is too long, bundle the excess cable outside the FTC (Main) unit.
For more details, refer to Section 4.3 in this manual or the installation manual that comes with PAC-SE41TS-E.
When using TH1, place this sensor on appropriate location to detect room temperature.

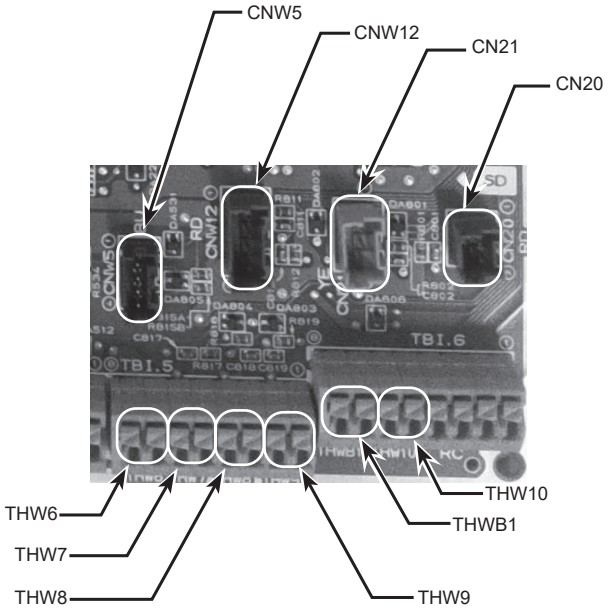

<Fig. 4.4.1>

### 4.4.2. Connecting the refrigerant pipe temp. thermistor (TH2) cable

Connect the TH2 cable to the CN21 connector on FTC (Main).
For split Outdoor unit : Connect TH2.
For packaged Outdoor unit : It is NOT necessary to connect TH2.

When the TH2 cable is too long, bundle the excess cable outside the FTC (Main) unit.
Do not bind the wires in the FTC (Main) unit.

<Thermistor position>
Place TH2 on **refrigerant** piping (**liquid** side).
It is recommended to protect the thermistor with heat insulating materials so as not to be affected by ambient temperature.
Note: Be sure to place TH2 where it correctly detects refrigerant piping temp. (liquid side).
Because;
(1) TH2 is required to detect heating subcool correctly.
(2) Refrigerant temperature of water-to-refrigerant heat exchanger also needs to be detected for protection purpose.

### 4.4.3. Connecting the flow water temp. thermistor (THW1) cable and the return water temp. thermistor (THW2) cable

The THW1 and the THW2 cables share a connector, and the connector connects to CNW12 connector on FTC (Main).

When the THW1 and THW2 cables are too long, bundle the excess cables outside the FTC (Main) unit.
Do not bind the wires in the FTC (Main) unit.

<Thermistor position>
Place THW1 on **water** piping (water **outlet** side) after booster heater, and THW2 on the water inlet side.
It is recommended to protect the thermistor with heat insulating materials so as not to be affected by ambient temperature.
Note: Be sure to attach THW1 where it correctly detects Flow temp. (water outlet side). Fore more details, see Page C-6.

### 4.4.4. Connecting the actual DHW tank thermistor (THW5B) cable

THW5B is an optional part (PAC-TH011TK2-E(5 m) or PAC-TH011TKL2-E(30 m)). However, PAC-IF073B-E comes with THW5B.
Connect the THW5B cable to the CNW5 connector on FTC (Main) if the DHW tank is available.
When the THW5B cable supplied with FTC (Main) is too long, bundle the excess cable outside the FTC (Main) unit.
Do not bind the wires in the FTC (Main) unit.

<Thermistor position>
Place THW5 on the position where tank water temperature can be detected correctly.
It is recommended to position the thermistor at the mid height of the DHW tank (to control DHW heating with this sensor).
It is recommended to protect the thermistor with heat insulating materials so as not to be affected by ambient temperature.
Especially for double (insulated) tank, thermistor should be attached to the inner side (to detect the water temperature).

**Note:**
**Stranded wire should be processed with insulation-covered bar terminal (DIN46228-4 standard compatible type).**
**The necessary thermistor (THW6, THW7, THW8, THW9) connection for 2-zone temperature control, refer to "4.7 Wiring for 2-zone temperature control" .**

**The necessary thermistor (THWB1, THW6, THW7) connection for back-up operation of boiler, refer to the installation manual of PAC-TH012HT-E .**

⚠ **Caution:**
**Do not route the thermistor cables together with power cables.**
**The sensor part of the thermistor should be installed where user can not access.**

### 4.4.5. Thermistor position and necessity

<Thermistor position and necessity>

| Outdoor unit type | DHW tank | TH2 | THW1 | THW2 | THW5B |
|---|---|---|---|---|---|
| Split | Present | ✔ | ✔ | ✔ | ✔ |
| | Absent | ✔ | ✔ | ✔ | — |
| Packaged | Present | — | ✔ | ✔ | ✔ |
| | Absent | — | ✔ | ✔ | — |

✔: Necessary. Connect the thermistor.
—: Not necessary. The thermistor is not required, do not connect.

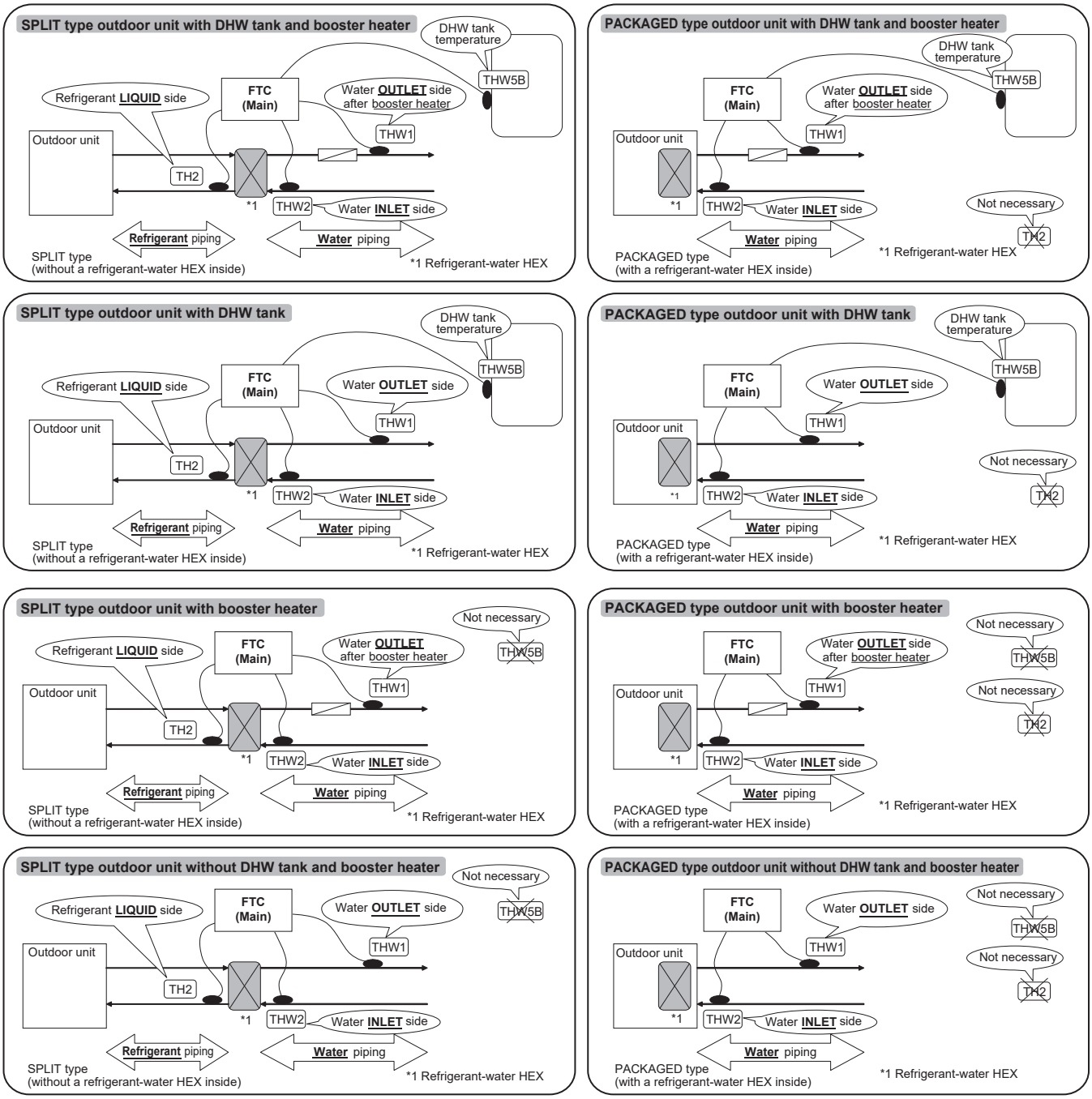


**<Fig. 4.4.2>**

## 4.5 Connecting inputs/outputs

For multiple outdoor units control with FTC (Sub), see section 9.

### ■ Signal inputs

| Name | Terminal block | Con-nector | Item | OFF (Open) | ON (Short) |
|---|---|---|---|---|---|
| IN1 | TBI.1 7-8 | — | Room thermostat 1 input *1 | Refer to SW2-1 in <5.1 DIP Switch Functions>. | |
| IN2 | TBI.1 5-6 | — | Flow switch 1 input | Refer to SW2-2 in <5.1 DIP Switch Functions>. | |
| IN3 | TBI.1 3-4 | — | Flow switch 2 input (Zone1) | Refer to SW3-2 in <5.1 DIP Switch Functions>. | |
| IN4 | TBI.1 1-2 | — | Demand control input | Normal | Heat source OFF/ Boiler operation *3 |
| IN5 | TBI.2 7-8 | — | Outdoor thermostat input *2 | Standard operation | Heater operation/ Boiler operation *3 |
| IN6 | TBI.2 5-6 | — | Room thermostat 2 input *1 | Refer to SW3-1 in <5.1 DIP Switch Functions>. | |
| IN7 | TBI.2 3-4 | — | Flow switch 3 input (Zone2) | Refer to SW3-2 in <5.1 DIP Switch Functions>. | |
| IN8 | TBI.3 7-8 | — | Electric energy meter 1 | *4 | |
| IN9 | TBI.3 5-6 | — | Electric energy meter 2 | | |
| IN10 | TBI.2 1-2 | — | Heat meter | | |
| IN11 | TBI.3 3-4 | — | Smart grid ready input | *5 | |
| IN12 | TBI.3 1-2 | — | | | |
| INA1 | TBI.4 1-3 | CN1A | Flow sensor input | *6 | |

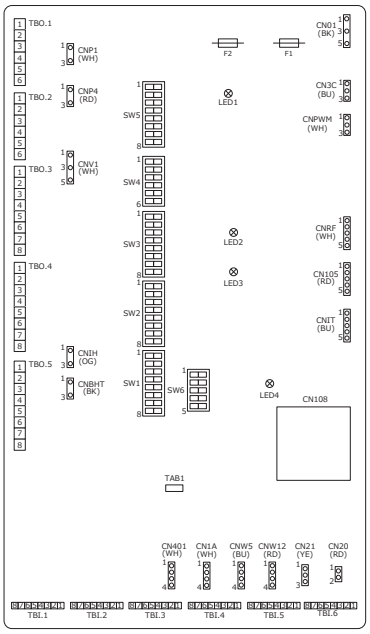


<Fig. 4.5.1>

*1. Set the ON/OFF cycle time of the room thermostat for 10 minutes or more; otherwise the compressor may be damaged.
*2. If using outdoor thermostat for controlling operation of heaters, the lifetime of the heaters and related parts may be reduced.
*3. To turn on the boiler operation, use the main remote controller to select “Boiler” in “External input setting“ screen in the service menu.
*4. Connectable electric energy meter and heat meter

- Pulse type: Voltage free contact for 12VDC detection by FTC (TBI.2 1 pin, TBI.3 5 and 7 pins have a positive voltage.)
- Pulse duration: Minimum ON time: 40ms; Minimum OFF time: 100ms
- Possible unit of pulse: 0.1 pulse/kWh, 1 pulse/kWh, 10 pulse/kWh, 100 pulse/kWh, 1000 pulse/kWh

Those values can be set by the main remote controller. (Refer to the menu tree in "7.2 Main remote controller".)
*5. As for the smart grid ready, refer to "4.9 Smart grid ready".
*6. Connectable flow sensor

- Power supply: 5 V DC
- Measuring range: 5 to 100 L/min; Those values can be set by the main remote controller. (Refer to <Auxiliary setting> on this page.)
- Flow signal: 0.5 V (at minimum flow rate) to 3.5 V (at maximum flow rate)

**Wiring specification and local supply parts**

| Item | Name | Model and specifications |
|---|---|---|
| Signal input function | Signal input wire | Use sheathed vinyl coated cord or cable.<br>Max. 30 m<br>Wire type: CV, CVS or equivalent<br>Wire size: Stranded wire 0.13 mm² to 0.52 mm²<br>Solid wire: ø0.4 mm to ø0.8 mm |
| | Switch | Non-voltage “a” contact signals<br>Remote switch: minimum applicable load 12 V DC, 1 mA |

Note:
Stranded wire should be processed with insulation-covered bar terminal
(DIN46228-4 standard compatible type).

**<Auxiliary settings>**

This function is used to set the parameters for any auxiliary parts used in the system

| Menu subtitle | | Function/ Description |
|---|---|---|
| Economy settings for pump | | Water pump stops automatically in certain period of time from when operation is finished. |
| | Delay | Time before pump switched off*1 |
| Electric heater (Heating) | | To select “WITH booster heater (ON)” or “WITHOUT booster heater (OFF)” in Heating mode. |
| | Delay | The minimum time required for the booster heater to turn ON from after Heating mode has started. |
| Electric heater (DHW) | | To select "WITH (ON)" or "WITHOUT (OFF)" booster heater or immersion heater individually in DHW mode. |
| | Delay | The minimum time required for the booster heater or immersion heater to turn ON from after DHW mode has started. (This setting is applied for both booster and immersion heater.) |
| Mixing valve control *2 | Running | Period from valve fully open (at a hot water mixing ratio of 100%) to valve fully closed (at a cold water mixing ratio of 100%) |
| | Interval | Interval (min) to control the Mixing valve. |
| Flow sensor *3 | Minimum | The minimum flow rate to be detected at Flow sensor. |
| | Maximum | The maximum flow rate to be detected at Flow sensor. |

*1. Decreasing "time before pump switched off" may increase the duration of stand-by in Heating/Cooling mode.
*2. Set the Running time according to the specifications of the actuator of each mixing valve. It is recommended to set the interval to 2 minutes that is a default value. With the interval set longer, it could take longer to warm up a room.
*3. Do not change the setting since it is set according to the specification of Flow sensor attached to the indoor unit.

## ■ Thermistor inputs

| Name | Terminal block | Connector | Item | Optional part model |
|---|---|---|---|---|
| TH1 | — | CN20 | Thermistor (Room temp.) (Option) *1 | PAC-SE41TS-E |
| TH2 | — | CN21 | Thermistor (Ref. liquid temp.) *2 | — |
| THW1 | — | CNW12 1-2 | Thermistor (Flow water temp.) | — |
| THW2 | — | CNW12 3-4 | Thermistor (Return water temp.) | — |
| THW5A | — | CNW5 1-2 | Thermistor (DHW tank upper water temp.) | — |
| THW5B | — | CNW5 3-4 | Thermistor (DHW tank water temp.) | — |
| THW6 | TBI.5 7-8 | — | Thermistor (Zone1 flow water temp.) (Option) *1 | PAC-TH011-E |
| THW7 | TBI.5 5-6 | — | Thermistor (Zone1 return water temp.) (Option) *1 | |
| THW8 | TBI.5 3-4 | — | Thermistor (Zone2 flow water temp.) (Option) *1 | PAC-TH011-E |
| THW9 | TBI.5 1-2 | — | Thermistor (Zone2 return water temp.) (Option) *1 | |
| THWB1 | TBI.6 7-8 | — | Thermistor (Boiler flow water temp.) (Option) *1 | PAC-TH012HT(L)-E |
| THW10 | TBI.6 5-6 | — | Thermistor (Mixing tank water temp.) (Option) *1 | |

**Ensure to wire thermistor wirings away from the power line and/or OUT1 to 16 wirings.**
***1. The maximum length of the thermistor wiring is 30 m.**
**The length of the optional thermistors are 5 m. If you need to splice and extend the wirings, following points must be carried out.**
**1) Connect the wirings by soldering.**
**2) Insulate each connecting point against dust and water. Stranded wire should be processed with insulation-covered bar terminal (DIN46228-4 standard compatible type).**
***2. Except PAC-IF072/073B-E.**

## ■ Outputs

| Name | Terminal block | Connector | Item | OFF | ON | Signal/Max. current | Max. total current |
|---|---|---|---|---|---|---|---|
| OUT1 | TBO.1 1-2 | CNP1 | Water circulation pump 1 output (Space heating/cooling & DHW) | OFF | ON | 230 V AC 1.0 A Max. (Inrush current 40A Max.) | 4.0A (a) |
| OUT2 | TBO.1 3-4 | — | Water circulation pump 2 output (Space heating/cooling for Zone1) | OFF | ON | 230 V AC 1.0 A Max. (Inrush current 40A Max.) | |
| OUT3 | TBO.1 5-6 | — | Water circulation pump 3 output (Space heating/cooling for Zone2) *1 | OFF | ON | 230 V AC 1.0 A Max. (Inrush current 40A Max.) | |
| | | | 2-way valve 2b output *2 | | | | |
| OUT4 | TBO.2 4-6 | CNV1 | 3-way valve (2-way valve 1) output | Heating | DHW | 230 V AC 0.1 A Max. | 3.0 A (b) |
| OUT5 | TBO.2 1-2 | — | Mixing valve output *1 | Stop | Close | 230 V AC 0.1 A Max. | |
| | TBO.2 2-3 | | | | Open | | |
| OUT6 | TBO.5 5-6 | — | Booster heater 1 output | OFF | ON | 230 V AC 0.5 A Max. (Relay) | |
| OUT7 | TBO.5 7-8 | — | Booster heater 2 output | OFF | ON | 230 V AC 0.5 A Max. (Relay) | |
| OUT8 | TBO.4 7-8 | — | Cooling signal output | OFF | ON | 230 V AC 0.5 A Max. | |
| OUT9 | TBO.4 5-6 | CNIH | Immersion heater output | OFF | ON | 230 V AC 0.5 A Max. (Relay) | |
| OUT10 | TBO.3 1-2 | — | Boiler output | OFF | ON | non-voltage contact ·220 - 240 V AC (30 V DC) 0.5 A or less ·10 mA 5 V DC or more | — |
| OUT11 | TBO.3 5-6 | — | Error output | Normal | Error | 230 V AC 0.5 A Max. | 3.0 A (b) |
| OUT12 | TBO.3 7-8 | — | Defrost output | Normal | Defrost | 230 V AC 0.5 A Max. | |
| OUT13 | TBO.4 3-4 | — | 2-way valve 2a output *2 | OFF | ON | 230 V AC 0.1 A Max. | |
| OUT14 | — | CNP4 | Water circulation pump 4 output (DHW) | OFF | ON | 230 V AC 1.0 A Max. | 4.0 A (a) |
| OUT15 | TBO.4 1-2 | — | Comp ON signal | OFF | ON | 230 V AC 0.5 A Max. | 3.0 A (b) |
| OUT16 | TBO.3 3-4 | — | Heating/Cooling thermo ON signal | OFF | ON | non-voltage contact ·220 - 240 V AC (30V DC) 0.5 A or less ·10 mA 5 V DC or more | — |
| OUTA1 | TBI.4 7-8 | — | Analog output | — | — | 0 - 10 V DC 5 mA max. | — |
| BC | TBO.5 3-4 | — | Booster heater protection output | OFF (BHT open) | ON (BHT short) | 230 V AC 0.5 A Max. | — |
| BHT | TBO.5 1-2 | CNBHT | Thermostat for booster heater | Thermostat Normal: short | High temp. : open | — | — |

**Do not connect to the terminals that are indicated as "—" in the "Terminal block" field.**
***1 For 2-zone temperature control.**
***2 For 2-zone valve ON/OFF control.**

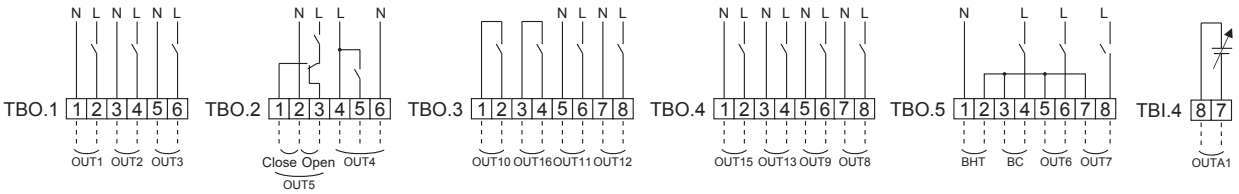


**Wiring specification and local supply parts**

| Item | Name | Model and specifications |
|---|---|---|
| External output function | Outputs wire | Use sheathed vinyl coated cord or cable.<br>Max. 30 m<br>Wire type: CV, CVS or equivalent<br>Wire size: Stranded wire 0.25 mm² to 1.5 mm²<br>Solid wire: 0.25 mm² to 1.5 mm² |

**Note:**
1. **When the FTC is powered via outdoor unit, the maximum grand total current of (a)+(b) is 3.0 A.**
2. **Do not connect multiple water circulation pumps directly to each output (OUT1, OUT2, and OUT3). In such a case, connect them via (a) relay(s).**
3. **Connect an appropriate surge absorber to OUT10 (TBO.3 1-2) depending on the load at site.**
4. **Stranded wire should be processed with insulation-covered bar terminal (DIN46228-4 standard compatible type).**

### How to use TBO.1 to 5

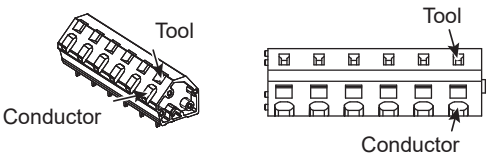


**Outline view** **Top view**

**Connect them using either way as shown above.**
**<Fig. 4.5.2>**

## 4.6 Wiring for heater

<Care to be taken when connecting a booster heater(s)>
The initial setting assumes that the connected booster heater(s) has a built-in direct cut-off thermostat. <Fig. 4.6.1>
When the connected booster heater(s) has a built-in indirect cut-off thermostat, perform wiring according to the following items. < Fig. 4.6.2>

- Connect the thermostat signal to BHT (TBO.5 1-2).
- Remove the jumper wire from connector CNBHT.
- Connect a contactor (or relay) for protecting the booster heater.
  (Connect the electromagnetic coil terminals to BC (TBO.5 3-4).

* Do not remove the jumper wire from connector CNBHT when the connected booster heater(s) has a built-in direct cut-off thermostat. < Fig. 4.6.1>

<Care to be taken when connecting an immersion heater>
The initial setting assumes that the connected immersion heater has a built-in direct cut-off thermostat. <Fig. 4.6.3>

**<Wiring for booster heater with a built-in direct cut-off thermostat>**

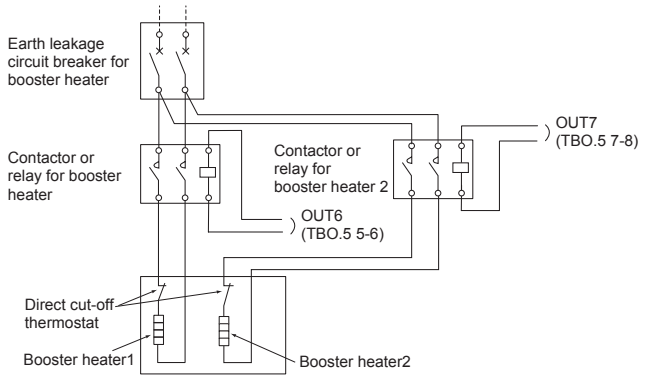


**<Fig. 4.6.1>**

**<Wiring for booster heater with a built-in indirect cut-off thermostat>**

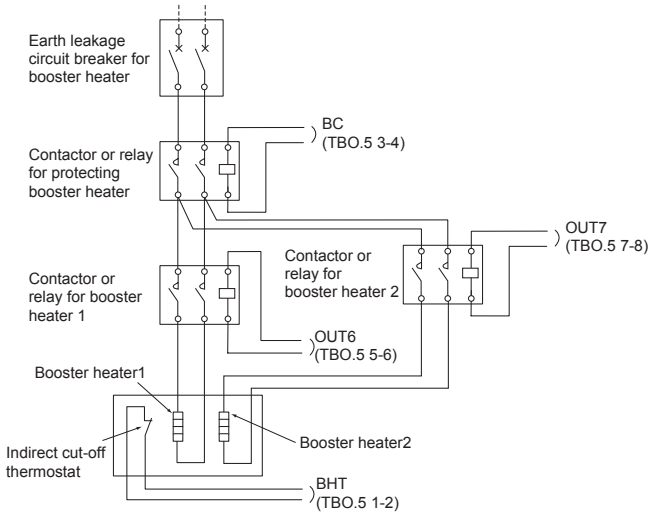


**<Fig. 4.6.2>**

**<Wiring for immersion heater with a built-in direct cut-off thermostat>**

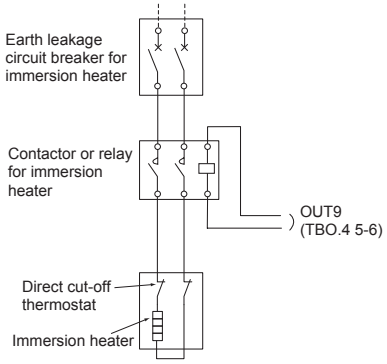


**<Fig. 4.6.3>**

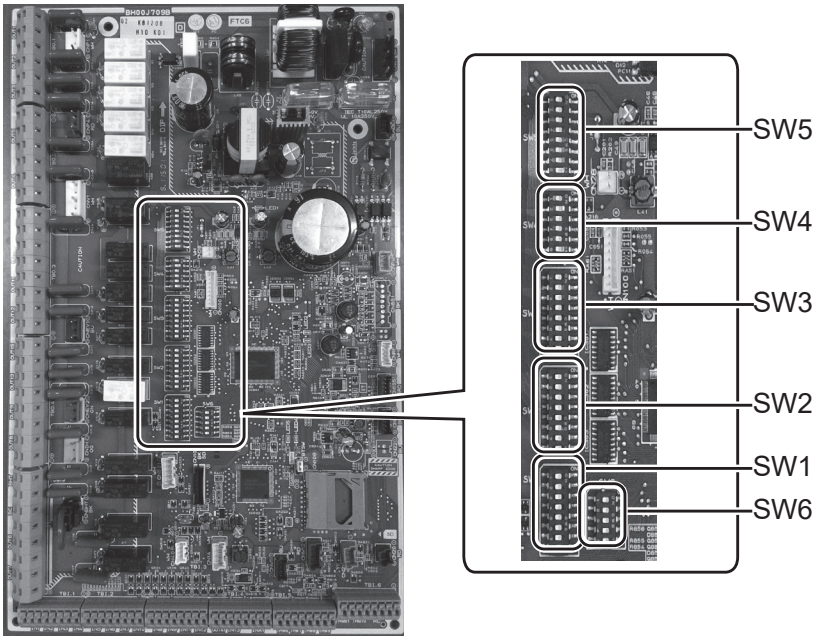

## 4.7 Wiring for 2-zone temperature control

Connect the pipe work and locally supplied parts according to the relevant circuit diagram shown “Local system” in Section 3, of this manual.

<Mixing valve>
Connect the signal line to open Port A (hot water inlet port) to TBO.2-3 (Open), the signal line to open Port B (cold water inlet port) to TBO.2-1 (Close), and the neutral terminal wire to TBO. 2-2 (N).

<Thermistor>
- Do not install the thermistors on the mixing tank.
- Install the Zone2 flow temp. thermistor (THW8) near the mixing valve.
- The maximum length of the thermistor wiring is 30 m.
- The length of the optional thermistors are 5 m. If you need to splice and extend the wirings, following points must be carried out.
  1) Connect the wirings by soldering.
  2) Insulate each connecting point against dust and water.

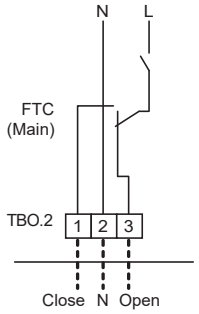


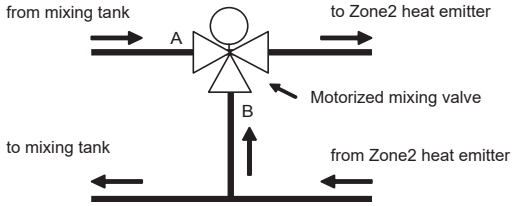


## 4.8 2-zone valve ON/OFF control

Opening /closing 2-way valve provides a simple 2-Zone control.
Flow temperature is common for Zone1 and 2.

**1. Pipe work**

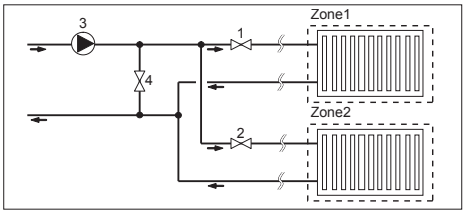


1. Zone1 2-way valve 2a (local supply)
2. Zone2 2-way valve 2b (local supply)
3. Water circulation pump 2 (local supply) *1
4. By-pass valve (local supply) *2

*1 Install according to system in the field.
*2 For safety protection, it is recommended to install a by-pass valve.

Note: Freeze stat function is deactivated whilst this control is ON. Use anti-freeze solution to avoid freezing, if necessary.

**2. DIP switch**
Turn DIP switch 3-6 ON.

**3. 2-way valve 2a (for Zone1) / 2-way valve 2b (for Zone2)**
Electrically wire 2-way valve 2a and 2b to the appropriate external output terminals. (Refer to "External outputs" in 4.5)

**4. Room thermostat connection**

| Heating operation mode | Zone1 | Zone2 |
|---|---|---|
| Room temp. control<br>(Auto adaptation) *3 | ● Wireless remote controller (option)<br>● Room temperature thermistor (option)<br>● Main remote controller (remote position) | ● Wireless remote controller (option) |
| Compensation curve or flow temp. control | ● Wireless remote controller (option) *4<br>● Room temperature thermostat (local supply) | ● Wireless remote controller (option) *4<br>● Room temperature thermostat (local supply) |

***3 Ensure to install the room thermostat for Zone1 in main room since the Room temp. control for Zone1 is prioritized.**
***4 The wireless remote controller can be used as a thermostat.**

## 4.9 Smart grid ready

In DHW or heating operation, the commands in the table below can be used.

| IN11 | IN12 | Meaning |
|---|---|---|
| OFF (open) | OFF (open) | Normal operation |
| ON (short) | OFF (open) | Switch-on recommendation |
| OFF (open) | ON (short) | Switch-off command |
| ON (short) | ON (short) | Switch-on command |

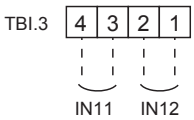


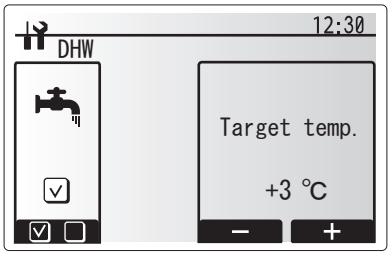


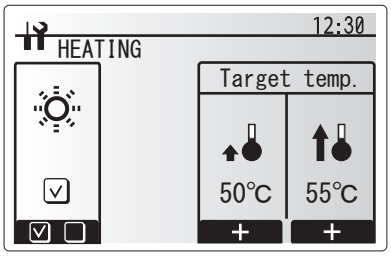

## 4.10 Installation procedure for DHW tank

**Note:**
- **Be aware that the respective DHW operations are greatly effected by the selections of the components such as tank, immersion heater, or the like.**
- **Follow your local regulations to perform system configuration.**

1. To enable switching of the water circulation circuit between the DHW mode and the heating mode, install a 3-way valve (local supply). The 3-way valve and the DHW tank should be positioned as shown in the system diagram in section 3.
   The use of two 2-way valves can perform the same function as a 3-way valve.
2. Install the optional thermistor THW5 (optional part PAC-TH011TK2-E(5 m) or PAC-TH011TKL2-E(30 m)) on the DHW tank. Note that PAC-IF073B-E comes with THW5B.
   It is recommended to position the thermistor at the mid point of the DHW tank capacity. Insulate thermistor from ambient air. Especially for double (insulated) tank, thermistor should be attached to the inner side (to detect the water temperature).
3. Connect the thermistor lead to the CNW5 connector on the FTC (Main).
4. The output terminals for the 3-way valve is TBO.2 4-6 (OUT4).
   The TBO.2 4-6 terminals on the FTC (Main) are shown in the wiring diagram.
   Choose the terminals that the 3-way valve is connected to between TBO.2 5-6, or TBO.2 4-6, according to the rated voltage.
   When the rated current of the 3-way valve exceeds 0.1A, be sure to use a relay with maximum voltage and current ratings of 230V AC / 0.1A when connecting to the FTC (Main). Do not directly connect the 3-way valve cable to the FTC (Main). Connect the relay cable to the TBO.2 5-6 terminals.
   3-way valve must be of SPST type. SPDT type can NOT be used.
   For systems using 2-way valves instead of a 3-way valve please read the following;

**Specification of 2-way valve (local supply)**
- Power supply: 230V AC
- Current: 0.1A Max. **(If over 0.1A you must use a relay)**
- Type: Normally closed

| | Installation position | Electrical connection terminal block | Output signal | | |
|---|---|---|---|---|---|
| | | | Heating | DHW | System OFF |
| 2-way valve1 | DHW | TBO.2 5-6 | OFF (closed) | ON (open) | OFF (closed) |
| 2-way valve2 | Heating | TBO.4 3-4 | ON (open) | OFF (closed) | OFF (closed) |

Note: Should the 2-way valve become blocked the water circulation will stop.
A by-pass valve or circuit should be installed between pump and 2-way valve for safety.
The TBO.4 3-4 terminals on the FTC (Main) are shown in the wiring diagram.
The 2-way valve (local supply) should be installed according to the instructions supplied with it. Follow 2-way valve's manufacturer's instructions as to whether to connect an earth cable or not.
- For the 2-way valve, choose the one that slowly opens and shuts off to prevent water hammer sound.
- Choose the 2-way valve equipped with manual override, which is necessary for topping up or draining of water.

5. Turn the DIP SW1-3 on the FTC (Main) to ON.

6. When using an immersion heater (local supply), connect a contact relay cable for the immersion heater to TBO.4 5-6 (OUT9), and turn the Dip SW1-4 to ON. Do NOT directly connect the power cable to the FTC (Main).

Note:
- When an immersion heater is installed, select appropriate breaker capacity and a cable with appropriate diameter on the basis of heater output.
- When wiring an immersion heater in the field, always install an earth leakage breaker to prevent accidental electric shock.

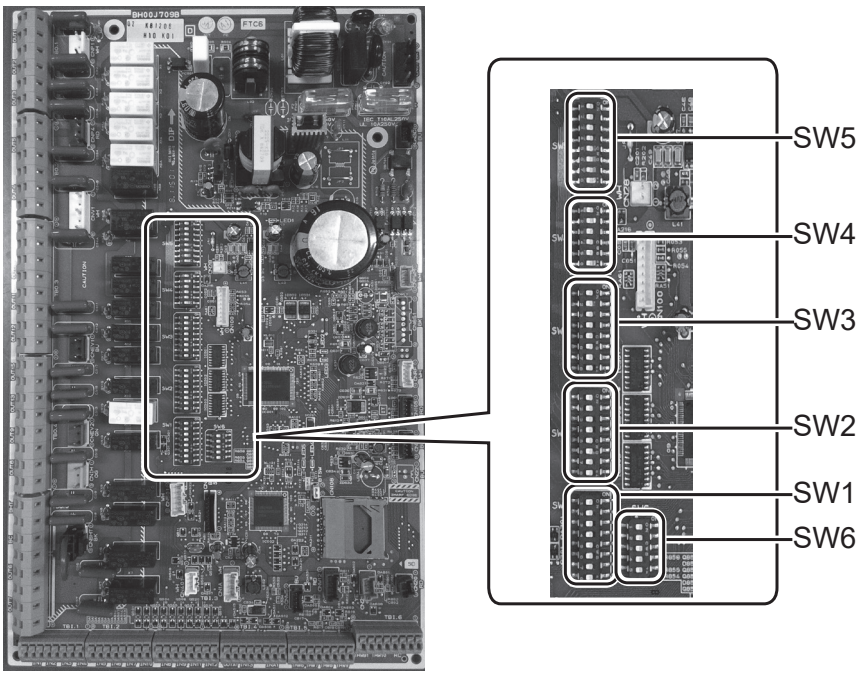


⚠ **WARNING: When connecting DHW tank**
**(1) Attach the optional thermistor THW5 (PAC-TH011TK2-E (5 m) or PAC-TH011TKL2-E (30 m)). Note that PAC-IF073B-E comes with THW5B.**
**(2) Always use earth leakage breaker when connecting immersion heater.**
**(3) When installing an immersion heater, be sure that the immersion heater has a built-in direct cut-off thermostat.**
**(4) Connect a pressure relief valve on the sanitary water side.**

## 4.11 Using SD memory card

FTC is equipped with an SD memory card interface.
Using an SD memory card can simplify main remote controller settings and can store operating logs. *1

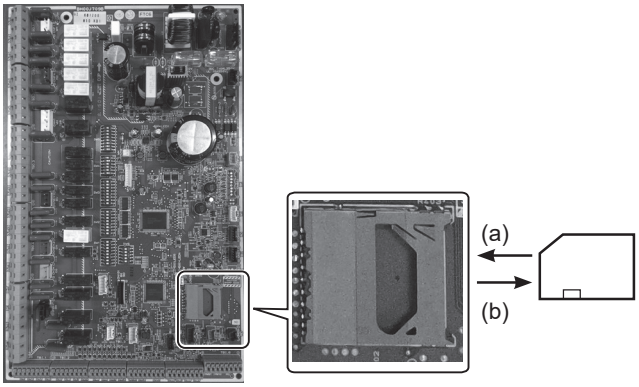


FTC (Main)

(a) For insertion, push on the SD memory card until it clicks into place.
(b) For ejection, push on the SD memory card until it clicks.
**Note: To avoid cutting fingers, do not touch sharp edges of the SD memory card connector (CN108) on the FTC control board.**

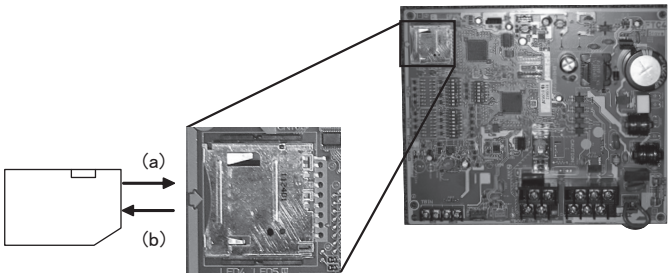


FTC (Sub)

**<Handling precautions>**

(1) Use an SD memory card that complies with the SD standards. Check that the SD memory card has a logo on it of those shown to the right.
(2) SD memory cards to the SD standards include SD, SDHC, mini SD, micro SD, and micro SDHC memory cards. The capacities are available up to 32 GB. Choose that with a maximum allowable temperature of 55ºC.
(3) When the SD memory card is a mini SD, mini SDHC, micro SD, or micro SDHC memory card, use an SD memory card converter adapter.
(4) Before writing to the SD memory card, release the write-protect switch.

(5) Before inserting or ejecting an SD memory card, make sure to power off the system. If an SD memory card is inserted or ejected with the system powered on, the stored data could be corrupted or the SD memory card be damaged.
*An SD memory card is live for a whilst after the system is powered off. Before insertion or ejection wait until the LED lamps on the FTC control board are all off.
(6) The read and write operations have been verified using the following SD memory cards, however, these operations are not always guaranteed as the specifications of these SD memory cards could change.

| Manufacturer | Model | Tested in |
|---|---|---|
| Verbatim | #44015 | Mar. 2012 |
| SanDisk | SDSDB-002G-B35 | Oct. 2011 |
| Panasonic | RP-SDP04GE1K | Oct. 2011 |
| Arvato | 2GB PS8032 TSB 24nm MLC | Jun. 2012 |
| Arvato | 2GB PS8035 TSB A19nm MLC | Jul. 2014 |
| SanDisk | SDSDUN-008G-G46 | Oct. 2016 |
| Verbatim | #43961 | Oct. 2016 |
| Verbatim | #44018 | Oct. 2016 |
| VANTASTEK | VSDHC08 | Sep.2017 |

Before using a new SD memory card (including the card that comes with the unit), always check that the SD memory card can be safely read and written to by the FTC controller.
<How to check read and write operations>
a) Check for correct wiring of power supply to the system. For more details, refer to section 4.1.
(Do not power on the system at this point.)
b) Insert an SD memory card.
c) Power on the system.
d) The LED4 lamp lights if the read and write operations are successfully completed. If the LED4 lamp continues blinking or does not light, the SD memory card cannot be read or written to by the FTC controller.

(7) Make sure to follow the instruction and the requirement of the SD memory card's manufacturer.
(8) Format the SD memory card if determined unreadable in step (6). This could make it readable.
Download an SD card formatter from the following site.
SD Association homepage: https://www.sdcard.org/home/
(9) FTC supports FAT file system but not NTFS file system.
(10) Mitsubishi Electric is not liable for any damages, in whole or in part, including failure of writing to an SD memory card, and corruption and loss of the saved data, or the like. Back up saved data as necessary.
(11) Do not touch any electronic parts on the FTC control board when inserting or ejecting an SD memory card, or else the control board could fail.

| Logos |
|---|
| |
| **Capacities** |
| 2 GB to 32 GB *2 |
| **SD speed classes** |
| All |

• The SD Logo is a trademark of SD-3C, LLC.
The mini SD logo is a trademark of SD-3C, LLC.
The micro SD logo is a trademark of SD-3C, LLC.

*1 To edit main remote controller settings or to check operating data, an Ecodan service tool (for use with PC) is required.
*2 A 2-GB SD memory card stores up to 30 days of operation logs.

## 5.1 DIP Switch Functions

Located on the FTC printed circuit board are 6 sets of small white switches known as DIP switches. The DIP switch number is printed on the circuit board next to the relevant switches. The word ON is printed on the circuit board and on the DIP switch block itself. To move the switch you will need to use a pin or the corner of a thin metal ruler or similar.

DIP switch settings are listed below in Table 5.1.1.
Only an authorised installer can change DIP switch setting under one's own responsibility according to the installation condition.
Make sure to turn off both indoor unit and outdoor unit power supplies before changing the switch settings.
For multiple outdoor units control with FTC (sub), see section 9.3.2.

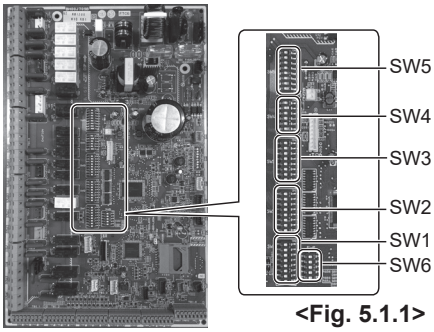

<Fig. 5.1.1>

| DIP switch | | Function | OFF | ON | Default settings: Indoor unit model |
|---|---|---|---|---|---|
| SW1 | SW1-1 | Boiler | WITHOUT Boiler | WITH Boiler | OFF |
| | SW1-2 | Heat pump maximum outlet water temperature | 55ºC | 60ºC | ON *1 |
| | SW1-3 | DHW tank | WITHOUT DHW tank | WITH DHW tank | OFF: PAC-IF071B-E<br>ON : PAC-IF072/073B-E |
| | SW1-4 | Immersion heater | WITHOUT Immersion heater | WITH Immersion heater | OFF: PAC-IF071B-E<br>ON : PAC-IF072/073B-E |
| | SW1-5 | Booster heater | WITHOUT Booster heater | WITH Booster heater | OFF |
| | SW1-6 | Booster heater function | For heating only | For heating and DHW | OFF |
| | SW1-7 | Outdoor unit type | Split type | Packaged type | OFF: PAC-IF071B-E<br>ON : PAC-IF072/073B-E |
| | SW1-8 | Wireless remote controller | WITHOUT Wireless remote controller | WITH Wireless remote controller | OFF |
| SW2 | SW2-1 | Room thermostat1 input (IN1) logic change | Zone1 operation stop at thermostat short | Zone1 operation stop at thermostat open | OFF |
| | SW2-2 | Flow switch1 input (IN2) logic change | Failure detection at short | Failure detection at open | OFF |
| | SW2-3 | Booster heater capacity restriction | Inactive | Active | OFF |
| | SW2-4 | Cooling mode function | Inactive | Active | OFF |
| | SW2-5 | Automatic switch to backup heat source operation (When outdoor unit stops by error) | Inactive | Active *2 | OFF |
| | SW2-6 | Mixing tank | WITHOUT Mixing tank | WITH Mixing tank | OFF |
| | SW2-7 | 2-zone temperature control | Inactive | Active *6 | OFF |
| | SW2-8 | Flow sensor | WITHOUT Flow sensor | WITH Flow sensor | OFF |
| SW3 | SW3-1 | Room thermostat 2 input (IN6) logic change | Zone2 operation stop at thermostat short | Zone2 operation stop at thermostat open | OFF |
| | SW3-2 | Flow switch 2 and 3 input logic change | Failure detection at short | Failure detection at open | OFF |
| | SW3-3 | — | — | — | OFF |
| | SW3-4 | Electric energy meter | WITHOUT Electric energy meter | WITH Electric energy meter | OFF |
| | SW3-5 | Heating mode function *3 | Inactive | Active | ON |
| | SW3-6 | 2-zone valve ON/OFF control | Inactive | Active | OFF |
| | SW3-7 | — | — | — | OFF |
| | SW3-8 | Heat meter | WITHOUT Heat meter | WITH Heat meter | OFF |
| SW4 | SW4-1 | Multiple outdoor unit control | Inactive | Active | OFF |
| | SW4-2 | Position of multiple outdoor unit control *7 | Sub | Main | OFF |
| | SW4-3 | — | — | — | OFF |
| | SW4-4 | Indoor unit only operation (during installation work) *4 | Inactive | Active | OFF |
| | SW4-5 | Emergency mode (Heater only operation) | Normal | Emergency mode (Heater only operation) | OFF *5 |
| | SW4-6 | Emergency mode (Boiler operation) | Normal | Emergency mode (Boiler operation) | OFF *5 |
| SW5 | SW5-1 | — | — | — | OFF |
| | SW5-2 | Advanced auto adaptation | Inactive | Active | ON |
| | SW5-3 | — | — | — | OFF |
| | SW5-4 | — | — | — | OFF |
| | SW5-5 | — | — | — | OFF |
| | SW5-6 | — | — | — | OFF |
| | SW5-7 | — | — | — | OFF |
| | SW5-8 | — | — | — | OFF |
| SW6 | SW6-1 | — | — | — | OFF: PAC-IF071/072B-E<br>ON: PAC-IF073B-E |
| | SW6-2 | — | — | — | OFF |
| | SW6-3 | Pressure sensor | Inactive | Active | OFF |
| | SW6-4 | Analog output signal (0-10V) | Inactive | Active | OFF |
| | SW6-5 | — | — | — | OFF |

<Table 5.1.1>

**Note:**
***1. When the FTC unit is connected with a outdoor unit of which maximum outlet water temperature is 55ºC, DIP SW1-2 must be changed to OFF.**
***2. External output (OUT11) will be available. For safety reasons, this function is not available for certain errors. (In that case, system operation must be stopped and only the water circulation pump keeps running.)**
***3. This switch functions only when the cylinder unit is connected with a PUHZ-FRP outdoor unit. When another type of outdoor unit is connected, the heating mode function is active regardless of the fact that this switch is ON or OFF.**
***4. Space heating and DHW can be operated only in indoor unit, like an electric heater. (Refer to "5.7 Indoor unit only operation". )**
***5. If emergency mode is no longer required, return the switch to OFF position.**
***6. Active only when SW3-6 is set to OFF.**
***7. SW4-2 is available only when SW4-1 is ON.**

## 5.2 Outdoor unit type

Set Dip SW 1-7 to set the outdoor unit type.

| Dip SW 1-7 | Setting | Note |
|---|---|---|
| OFF | Split type | Necessary to connect TH2 |
| ON | Packaged type | Not necessary to connect TH2 |

Set Dip SW 1-2 to set the heat pump maximum outlet water temperature.

| Dip SW 1-2 | Setting |
|---|---|
| OFF | 55°C |
| ON | 60°C |

Note: When Dip SW 1-2 is OFF (55°C) and an electric heater is not installed (*), 'Legionellla Prevention Mode' is NOT available.

* Dip SW settings set when no electric heater is installed.

| Dip SW 1-2 | Dip SW 1-4 | Dip SW 1-5 | Dip SW 1-6 |
|---|---|---|---|
| OFF | OFF | ON | OFF |
| OFF | OFF | OFF | (ON/OFF) |

## 5.3 Functions setting

Set Dip SW 1-1 to set whether the system has a boiler.

| Dip SW 1-1 | Setting |
|---|---|
| OFF | WITHOUT boiler |
| ON | WITH boiler |

When Dip SW 1-1 is OFF, back-up operation of boiler is not available.

Set Dip SW 1-3 to set whether the system has a DHW tank.

| Dip SW 1-3 | Setting | Note |
|---|---|---|
| OFF | WITHOUT DHW tank | Not necessary to connect THW5 |
| ON | WITH DHW tank | Necessary to connect THW5 |

When Dip SW 1-3 is OFF, DHW mode is not available.

Set Dip SW 1-4 to set whether the system has an immersion heater.

| Dip SW 1-4 | Setting |
|---|---|
| OFF | WITHOUT immersion heater |
| ON | WITH immersion heater |

Set Dip SW 1-5 to set whether the system has a booster heater.

| Dip SW 1-5 | Setting |
|---|---|
| OFF | WITHOUT booster heater |
| ON | WITH booster heater |

Set Dip SW 1-6 to set the booster heater function.

| Dip SW 1-6 | Setting |
|---|---|
| OFF | For heating only |
| ON | For heating and DHW |

Set Dip SW 2-6 to set whether the system has a mixing tank.

| Dip SW 2-6 | Setting |
|---|---|
| OFF | WITHOUT mixing tank |
| ON | WITH mixing tank |

When Dip SW 2-6 is OFF, back-up operation of boiler is not available.
When Dip SW 2-6 is OFF, 2-zone temperature control is not available.

Set Dip SW 2-7 to set activate or deactivate 2-zone temperature control.

| Dip SW 2-7 | Setting |
|---|---|
| OFF | Inactive |
| ON | Active |

Set Dip SW 2-8 to set whether the system has a flow sensor.

| Dip SW 2-8 | Setting |
|---|---|
| OFF | WITHOUT flow sensor |
| ON | WITH flow sensor |

Set Dip SW 3-4 to set whether the system has an electric energy meter.

| Dip SW 3-4 | Setting |
|---|---|
| OFF | WITHOUT electric energy meter |
| ON | WITH electric energy meter |

Set Dip SW 3-6 to set activate or deactivate 2-zone valve ON/OFF control.

| Dip SW 3-6 | Setting |
|---|---|
| OFF | Inactive |
| ON | Active |

Set Dip SW 3-8 to set whether the system has a heat meter.

| Dip SW 3-8 | Setting |
|---|---|
| OFF | WITHOUT heat meter |
| ON | WITH heat meter |

Set Dip SW 4-1 to set activate or deactivate multiple units control.

| Dip SW 4-1 | Setting |
|---|---|
| OFF | Inactive |
| ON | Active |

When Dip SW 4-1 is OFF, 2-zone temperature control and 2-zone valve ON/OFF control is not available.

Set Dip SW 4-2 to set main or sub of multiple units control.

| Dip SW 4-2 | Setting |
|---|---|
| OFF | Sub |
| ON | Main |

When multiple units control is not available, setting of Dip SW 4-2 is not necessary.

Set Dip SW 5-2 to set activate or deactivate advanced auto adaptation.

| Dip SW 5-2 | Setting |
|---|---|
| OFF | Inactive |
| ON | Active |

**<Summary of Function setting>**

| Dip SW 1-3 (DHW tank) | Dip SW 1-4 (Immersion heater) | Dip SW 1-5 (Booster heater) | Dip SW 1-6 (BH function) | System diagram |
|---|---|---|---|---|
| ON (WITH DHW tank) | OFF (WITHOUT immersion heater) | ON (WITH booster heater) | ON (For heating and DHW) | 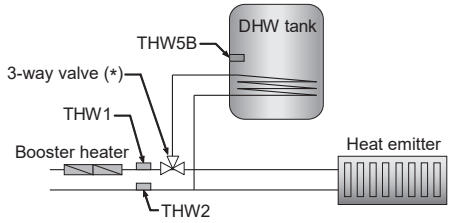 |
| ON (WITH DHW tank) | ON (WITH immersion heater) | ON (WITH booster heater) | ON (For heating and DHW) | 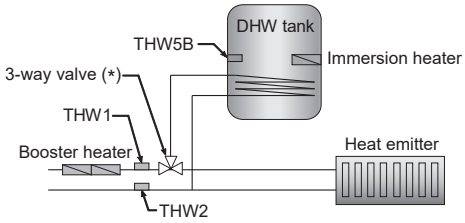 |
| ON (WITH DHW tank) | OFF (WITHOUT immersion heater) | ON (WITH booster heater) | OFF (For heating only) | 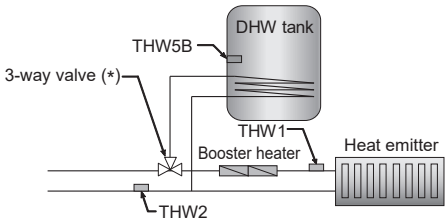 |
| ON (WITH DHW tank) | OFF (WITHOUT immersion heater) | OFF (WITHOUT booster heater) | — | 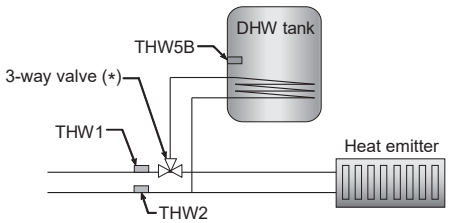 |
| ON (WITH DHW tank) | ON (WITH immersion heater) | ON (WITH booster heater) | OFF (For heating only) | 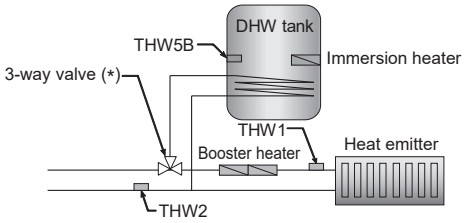 |
| ON (WITH DHW tank) | ON (WITH immersion heater) | OFF (WITHOUT booster heater) | — | 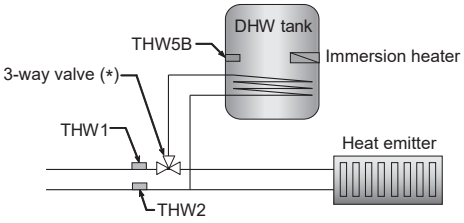 |
| OFF (WITHOUT DHW tank) | OFF (WITHOUT immersion heater) | ON (WITH booster heater) | OFF | 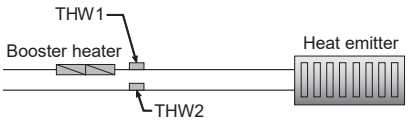 |
| OFF (WITHOUT DHW tank) | OFF (WITHOUT immersion heater) | OFF (WITHOUT booster heater) | — | |

* The use of two 2-way valves can perform same function as a 3-way valve.

## 5.4 Operation setting

Set Dip SW 1-8 to set whether the system has a wireless remote controller.

| Dip SW 1-8 | Setting |
|---|---|
| OFF | WITHOUT wireless remote controller |
| ON | WITH wireless remote controller |

Set Dip SW 2-1 to set the room thermostat 1 input (IN1) logic.

| Dip SW 2-1 | Setting |
|---|---|
| OFF | Operation stop at thermostat short |
| ON | Operation stop at thermostat open |

Set Dip SW 2-2 to set the flow switch 1 input (IN2) logic.

| Dip SW 2-2 | Setting |
|---|---|
| OFF | Failure detection at short |
| ON | Failure detection at open |

Set Dip SW 2-3 to set the restriction on the capacity of booster heater.

| Dip SW 2-3 | Setting |
|---|---|
| OFF | Inactive |
| ON | Active |

When Dip SW 2-3 is ON, booster heater 2 operation is not available. (Only booster heater 1 is available.)

Notes: ① When installing one booster heater, use OUT6 (Booster Heater 1) and switch SW2-3 to ON.
② When installing two booster heaters, use OUT6 (Booster Heater 1) and OUT7 (Booster heater 2). In such cases, use OUT7 (Booster heater 2) to connect the one with higher capacity.

Reference: Summary of Booster heater control
The booster heater is controlled in the following three steps.

| | | Booster heater 1 (OUT6) | Booster heater 2 (OUT7) | |
|---|---|---|---|---|
| OFF | | OFF | OFF | Controlled to this extent when SW2-3 is ON. |
| ON | STEP 1 | ON | OFF | |
| | STEP 2 | OFF | ON | |
| | STEP 3 | ON | ON | |

Set Dip SW 2-4 to set activate or deactivate cooling mode.

| Dip SW 2-4 | Setting |
|---|---|
| OFF | Inactive |
| ON | Active |

When Dip SW 2-4 is OFF, cooling mode is not available.

Set Dip SW 2-5 to set the automatic switch to backup heater only operation. (When outdoor unit stops by error.)

| Dip SW 2-5 | Setting |
|---|---|
| OFF | Inactive |
| ON | Active |

Set Dip SW 3-1 to set the room thermostat 2 input (IN6) logic.

| Dip SW 3-1 | Setting |
|---|---|
| OFF | Operation stop at thermostat short |
| ON | Operation stop at thermostat open |

Set Dip SW 3-2 to set the flow switch 2 and 3 input logic.

| Dip SW 3-2 | Setting |
|---|---|
| OFF | Operation stop at thermostat short |
| ON | Operation stop at thermostat open |

Set Dip SW 3-5 to set activate or deactivate heating mode.

| Dip SW 3-5 | Setting |
|---|---|
| OFF | Inactive |
| ON | Active |

When the connected outdoor unit is not of PUHZ-FRP model, heating mode is always active regardless of Dip SW3-5 setting.

Set Dip SW 4-4 to set activate or deactivate indoor unit only operation.

| Dip SW 4-4 | Setting |
|---|---|
| OFF | Inactive |
| ON | Active |

## 5.5 Emergency mode (Heater only operation)

The emergency mode is available when a failure on the outdoor unit of the heat pump or a communication error occurs.
This mode uses booster heater or immersion heater as a heat source and automatically controls between the DHW mode and the heating mode. When the system is not incorporated with heater, the emergency mode is not available.
Before starting the emergency mode, turn off the outdoor unit and FTC (Main), and then turn Dip SW 4-5 to ON. Then, turn on FTC (Main) to start the emergency mode. FTC (Main) can be power-supplied by the outdoor unit or directly by power source.
If emergency mode is no longer required, please turn off both outdoor and indoor unit power supply before returning Dip SW4-5 to OFF position.

## 5.6 Emergency mode (Boiler operation)

The emergency mode is available when a failure on the outdoor unit of the heat pump or a communication error occurs.
This mode uses boiler as a heat source and automatically controls the heating mode. When the system is not incorporated with boiler, the emergency mode is not available.
Before starting the emergency mode, turn off the outdoor unit and FTC (Main), and then turn Dip SW 4-6 to ON. Then, turn on FTC (Main) to start the emergency mode. FTC (Main) can be power-supplied by the outdoor unit or directly by power source.
If emergency mode is no longer required, please turn off both outdoor and indoor unit power supply before returning Dip SW4-6 to OFF position.

## 5.7 Indoor unit only operation (during installation work)

In the case when DHW or heating operation is required prior to connection of the outdoor unit; i.e. during installation work, an electric heater in indoor unit (*1) can be used.
*1 Model with electric heater only.
*2 Not available during Multiple outdoor unit control.

1. To start operation
● Check if the indoor unit power supply is OFF, and turn DIP switch 4-4 and 4-5 ON.
● Turn ON the indoor unit power supply.

2. To end operation*
● Turn OFF the indoor unit power supply.
● Turn DIP switch 4-4 and 4-5 OFF.
*When the indoor unit only operation is ended, ensure to check over the settings after outdoor unit is connected.

**Note:**
**Prolonged running of the this operation may affect the life of the electric heater.**

## 6.1 Check

After completing installation and the wiring and piping of the local application and outdoor units, check for refrigerant leakage, looseness in the power supply or control wiring, wrong polarity, and power cable is securely connected.
Use a 500-volt megohmmeter to check that the resistance between the power supply terminals and ground is at least 1.0MΩ.

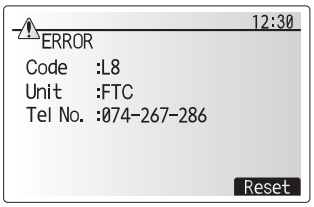


⚠ **Warning:**
**Do not use the system if the insulation resistance is less than 1.0MΩ.**
⚠ **Caution:**
**Do not carry out this test on the control wiring (low voltage circuit) terminals.**

## 6.2 Self-check

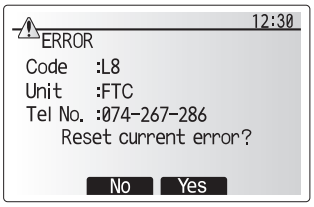


When an error occurs when power is applied or during operation
■ Indication of error details
The code, unit, address, and telephone number are displayed.
The telephone number is displayed if registered.
■ Resetting the error
Press the F4 (RESET) button, and the F3 (Yes) button to reset the current error.

| Code | Error | Action |
|---|---|---|
| L3 | Circulation water temperature overheat protection | Flow rate may be reduced check for;<br>• Water leakage<br>• Strainer blockage<br>• Water circulation pump function (Error code may display during filling of primary circuit, complete filling and reset error code.) |
| L4 | DHW tank water temperature overheat protection | Check the immersion heater and it's contactor. |
| L5 | Indoor unit temperature thermistor (THW1, THW2, THW5B, THW6, THW7, THW8, THW9) failure | Check resistance across the thermistor. |
| L6 | Circulation water freeze protection | See Action for L3. |
| L8 | Heating operation error | Re-attach any thermistors that have become dislodged. |
| L9 | Low primary circuit flow rate detected by flow sensor or flow switch (flow switches 1, 2, 3) | See Action for L3. If the flow sensor or flow switch itself does not work, replace it.<br>**Caution: The pump valves may be hot, please take care.** |
| LA | Pressure sensor failure | Check pressure sensor cable for damage or loose connections. |
| LB | High pressure protection | • Flow rate of the heating circuit may be reduced. Check water circuit.<br>• Plate heat exchanger may be clogged. Check the plate heat exchanger.<br>• Outdoor unit failure. Check refrigerant volume, valve, LEV coil and pipe crushing of outdoor unit. |
| LC | Boiler circulation water temperature overheat protection | Check if the setting temperature of the Boiler for heating exceeds the restriction. (See the manual of the thermistors "PAC-TH012HT-E".) |
| | | Flow rate of the heating circuit from the boiler may be reduced. Check for<br>• water leakage<br>• strainer blockage<br>• water circulation pump function |
| LD | Boiler temperature thermistor (THWB1) failure | Check resistance across the thermistor. |
| LE | Boiler operation error | See Action for L8. Check the status of the boiler. |
| LF | Flow sensor failure | Check flow sensor cable for damage or loose connections. |
| LH | Boiler circulation water freeze protection | Flow rate of the heating circuit from the boiler may be reduced. Check for<br>• water leakage<br>• strainer blockage<br>• water circulation pump function |
| LJ | DHW operation error (type of external plate HEX) | • Check for disconnection of DHW tank water temp. thermistor (THW5B).<br>• Flow rate of the sanitary circuit may be reduced.<br>• Check for water circulation pump function. |
| LL | Setting errors of DIP switches on FTC control board | For boiler operation, check that DIP SW1-1 is set to ON (With Boiler) and DIP SW2-6 is set to ON (With Mixing Tank).<br>For 2-zone temperature control, check DIP SW2-7 is set to ON (2-zone) and DIP SW2-6 is set to ON (With Mixing Tank). |
| LP | Out of water flow rate range for outdoor heat pump unit | Check the installation Table 4.3.1<br>Check remote controller settings (Service menu / heat pump flow rate range)<br>See Action for L3. |
| P1 | Thermistor (Room temp.) (TH1) failure | Check resistance across the thermistor. |
| P2 | Thermistor (Ref. liquid temp.) (TH2) failure | Check resistance across the thermistor. |
| P6 | Anti-freeze protection of plate heat exchanger | See Action for L3.<br>Check for correct amount of refrigerant. |
| J0 | Communication failure between FTC and wireless receiver | Check connection cable for damage or loose connections. |
| J1 - J8 | Communication failure between wireless receiver and wireless remote controller | Check wireless remote controller's battery is not flat.<br>Check the pairing between wireless receiver to wireless remote controller.<br>Test the wireless communication. (See the manual of wireless system.) |
| J9 | Communication failure between FTC(Main) and FTC(Sub). | Check connection cable for damage or loose connections. |
| E0 - E5 | Communication failure between main remote controller and FTC | Check connection cable for damage or loose connections. |
| E6 - EF | Communication failure between FTC and outdoor unit | Check that the outdoor unit has not been turned off.<br>Check connection cable for damage or loose connections.<br>Refer to outdoor unit service manual. |
| E9 | Outdoor unit receives no signal from indoor unit. | Check both units are switched on. Check connection cable for damage or loose connections. Refer to outdoor unit service manual. |
| EE | Combination error between FTC and outdoor unit | Check combination of FTC and outdoor unit. |
| U*,F*,A* | Outdoor unit failure | Refer to outdoor unit service manual. |

**Note: To cancel error codes please switch system off (Press button F4(RESET) on Main remote controller).**

For description of each LED (LED1 to 3) provided on the FTC, refer to the following table.

| | |
|---|---|
| LED 1 (Power for microcomputer) | Indicates whether control power is supplied. Make sure that this LED is always lit. |
| LED 2 (Power for main remote controller) | Indicates whether power is supplied to the main remote controller. This LED lights only in the case of the FTC (Main) unit which is connected to the outdoor unit refrigerant address "0". |
| LED 3 (Communication between FTC and outdoor unit) | Indicates state of communication between the FTC and outdoor unit. Make sure that this LED is always blinking. |

**Note**
**(Marking for WEEE)**

**This symbol mark is for EU countries only.**
**This symbol mark is according to the directive 2012/19/EU Article 14 Information for users and Annex IX.**
Your MITSUBISHI ELECTRIC product is designed and manufactured with high quality materials and components which can be recycled and reused. This symbol means that electrical and electronic equipment, at their end-of-life, should be disposed of separately from your household waste.
Please, dispose of this equipment at your local community waste collection/recycling centre.
In the European Union there are separate collection systems for used electrical and electronic product.
Please, help us to conserve the environment we live in!

## 7.1 Safety precautions FOR USER

- ► **Before installing the unit, make sure you read all the "Safety Precautions".**
- ► **The "Safety Precautions" provide very important points regarding safety. Make sure you follow them.**
- ► **Please report to or take consent by the supply authority before connection to the system.**

**Symbols used in the text**
**⚠ Warning:**
**Describes precautions that should be observed to prevent danger of injury or death to the user.**
**⚠ Caution:**
**Describes precautions that should be observed to prevent damage to the unit.**

**Symbols used in the illustrations**
⏚ : Indicates a part which must be grounded.

**⚠ Warning:**
- **For appliances not accessible to the general public.**
- **The unit must not be installed by the user. Ask the dealer or an authorized company to install the unit. If the unit is installed improperly, water leakage, electric shock or fire may result.**
- **Do not stand on, or place any items on the unit.**
- **Do not splash water over the unit and do not touch the unit with wet hands. An electric shock may result.**
- **Do not spray combustible gas close to the unit. Fire may result.**
- **Do not place a gas heater or any other open-flame appliance where it will be exposed to the air discharged from the unit. Incomplete combustion may result.**
- **Do not remove the front panel or the fan guard from the outdoor unit when it is running.**
- **When you notice exceptionally abnormal noise or vibration, stop operation, turn off the power switch, and contact your dealer.**
- **Never insert fingers, sticks etc. into the intakes or outlets.**
- **If you detect odd smells, stop using the unit, turn off the power switch and consult your dealer. Otherwise, a breakdown, electric shock or fire may result.**
- **If the supply cable is damaged, it must be replaced by the manufacturer, its service agent or similarly qualified persons in order to avoid a hazard.**
- **This appliance is not intended for use by persons (including children) with reduced physical, sensory or mental capabilities, or lack of experience and knowledge, unless they have been given supervision or instruction concerning use of the appliance by a person responsible for their safety.**
- **Children should be supervised to ensure that they do not play with the appliance.**
- **If the refrigeration gas blows out or leaks, stop the operation of the air conditioner, thoroughly ventilate the room, and contact your dealer.**
- **Do not install in location that is hot or humid for long periods of time.**

**⚠ Caution:**
- **Do not use any sharp object to push the buttons, as this may damage the main remote controller.**
- **Never block or cover the indoor or outdoor unit's intakes or outlets.**

**Disposing of the unit**
When you need to dispose of the unit, consult your dealer.

## 7.2 Main remote controller

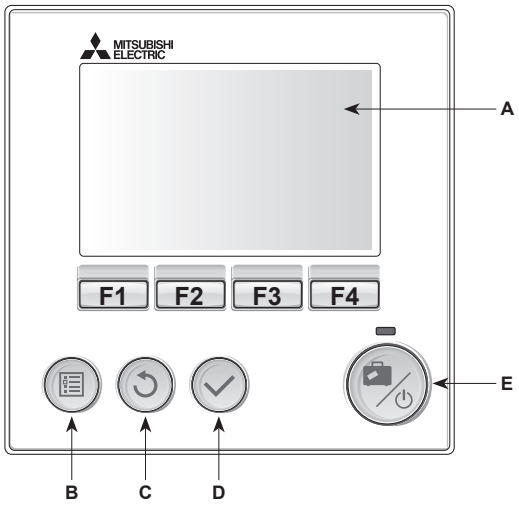


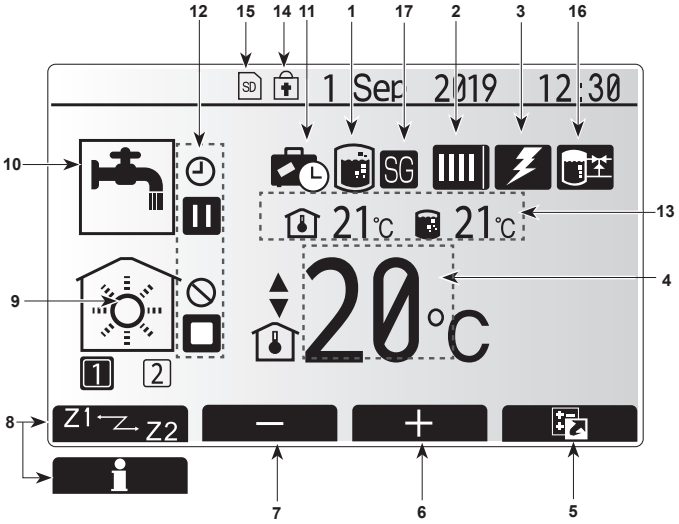


Main screen

**<Main remote controller parts>**

| Letter | Name | Function |
|---|---|---|
| A | Screen | Screen in which all information is displayed. |
| B | Menu | Access to system settings for initial set up and modifications. |
| C | Back | Return to previous menu. |
| D | Confirm | Used to select or save. (Enter key) |
| E | Power/Holiday | If system is switched off pressing once will turn system ON. Pressing again when system is switched on will enable Holiday Mode. Holding the button down for 3 secs will turn the system off. (***1**) |
| F1-4 | Function keys | Used to scroll through menu and adjust settings. Function is determined by the menu screen visible on screen A. |

***1**
**When the system is switched off or the power supply is disconnected, the indoor unit protection functions (e.g. freeze stat. function) will NOT operate. Please beware that without these safety functions enabled the indoor unit may potentially become exposed to damage.**

**<Main screen icons>**

| | Icon | Description | |
|---|---|---|---|
| 1 | Legionella prevention | When this icon is displayed 'Legionella prevention mode' is active. | |
| 2 | Heat pump | | 'Heat pump' is running. |
| | | | Defrosting |
| | | | Emergency heating |
| | | | 'Quiet mode' is activated. |
| 3 | Electric heater | When this icon is displayed the 'Electric heaters' (booster or immersion heater) are in use. | |
| 4 | Target temperature | | Target flow temperature |
| | | | Target room temperature |
| | | | Compensation curve |
| 5 | OPTION | Pressing the function button below this icon will display the option screen. | |
| 6 | + | Increase desired temperature. | |
| 7 | - | Decrease desired temperature. | |
| 8 | Z1 Z2 | Pressing the function button below this icon switches between Zone1 and Zone2. | |
| | Information | Pressing the function button below this icon displays the information screen. | |
| 9 | Space heating (cooling) mode | | Heating mode Zone1 or Zone2 |
| | | | Cooling mode Zone1 or Zone2 |
| 10 | DHW mode | Normal or ECO mode | |
| 11 | Holiday mode | When this icon is displayed 'Holiday mode' activated. | |
| 12 | | Timer | |
| | | Prohibited | |
| | | Server control | |
| | | Stand-by | |
| | | Stand-by (***2**) | |
| | | Stop | |
| | | Operating | |
| 13 | Current temperature | | Current room temperature |
| | | | Current water temperature of DHW tank |
| 14 | | The Menu button is locked or the switching of the operation modes between DHW and Heating operations are disabled in the Option screen. (***3**) | |
| 15 | | SD memory card is inserted. Normal operation. | |
| | | SD memory card is inserted. Abnormal operation. | |
| 16 | Buffer tank control | When this icon is displayed 'Buffer tank control' is active. | |
| 17 | Smart grid ready | When this icon is displayed, 'Smart grid ready' is active. | |

***2 This unit is in Stand-by whilst other indoor unit(s) is in operation by priority.**
***3 To lock or unlock the Menu, press the BACK and CONFIRM keys simultaneously for 3 seconds.**

## ■ Initial setting wizard

When the main remote controller is switched on for the first time, the screen automatically goes to Language setting screen , Date/Time setting screen and Main settings menu screen in order. Enter the desired number using the function keys and press CONFIRM.

**Note:**
<HEATER CAPACITY RESTRICTION>
This setting restricts the booster heater capacity. It is NOT possible to change the setting after starting up.
If you do not have any special requirements (such as building regulations) in your country, skip this setting (select “No”).

- Hot water (DHW/Legionella)
- Heating/Cooling
- Operation (ON/Prohibited/Timer)
- Pump speed
- Heat pump flow rate range
- Mixing valve control
- HEATER CAPACITY RESTRICTION

*1 The screen goes to the next setting screen. Changes have not been saved.

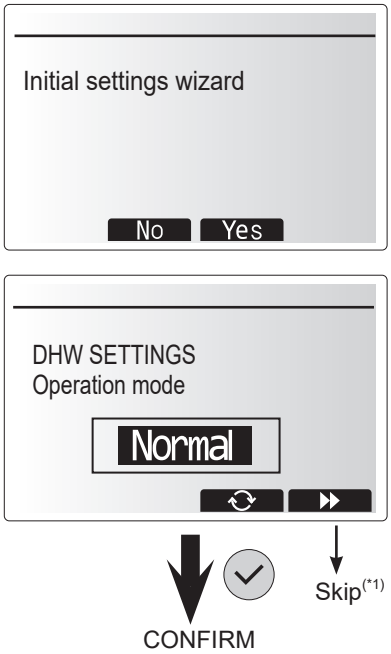


## ■ Main Settings Menu

The main settings menu can be accessed by pressing the MENU button. To reduce the risk of untrained end users altering the settings accidentally there are two access levels to the main settings; and the service section menu is password protected.

**User Level – Short press**
If the MENU button is pressed once for a short time the main settings will be displayed but without the edit function. This will enable the user to view current settings but **NOT** change the parameters.

**Installer Level – Long press**
If the MENU button is pressed down for 3 seconds the main settings will be displayed with all functionality available.
The colour of ◄► buttons is inverted, as per figure on right. <Fig. 5.5.1>.

The following items can be viewed and/or edited (dependent on access level).
- Domestic Hot water (DHW)
- Heating/Cooling
- Schedule timer
- Holiday mode
- Initial settings
- Service (Password protected)

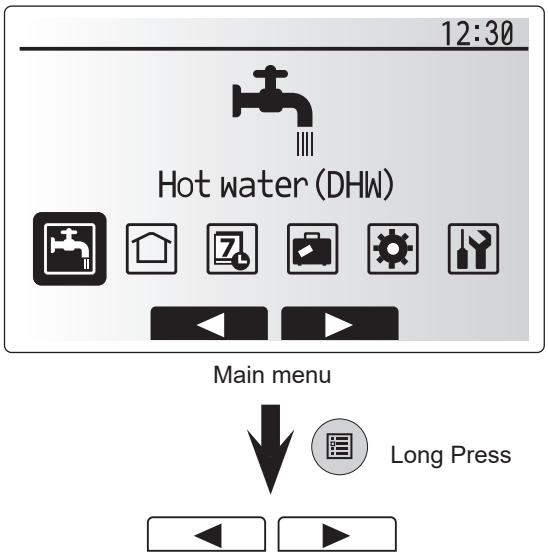

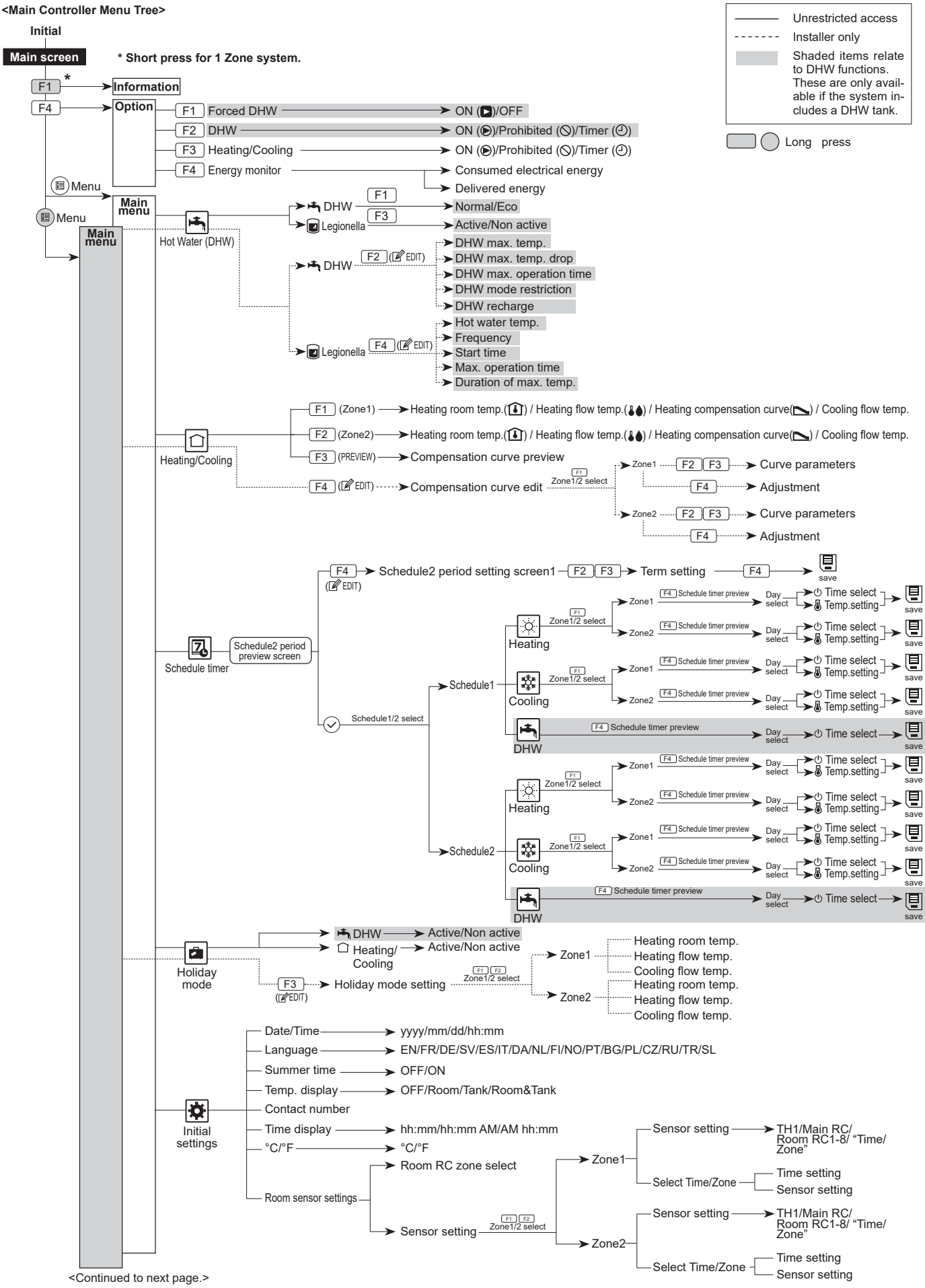


<Continued to next page.>

<Continued from the previous page.>

**<Main Controller Menu Tree>**

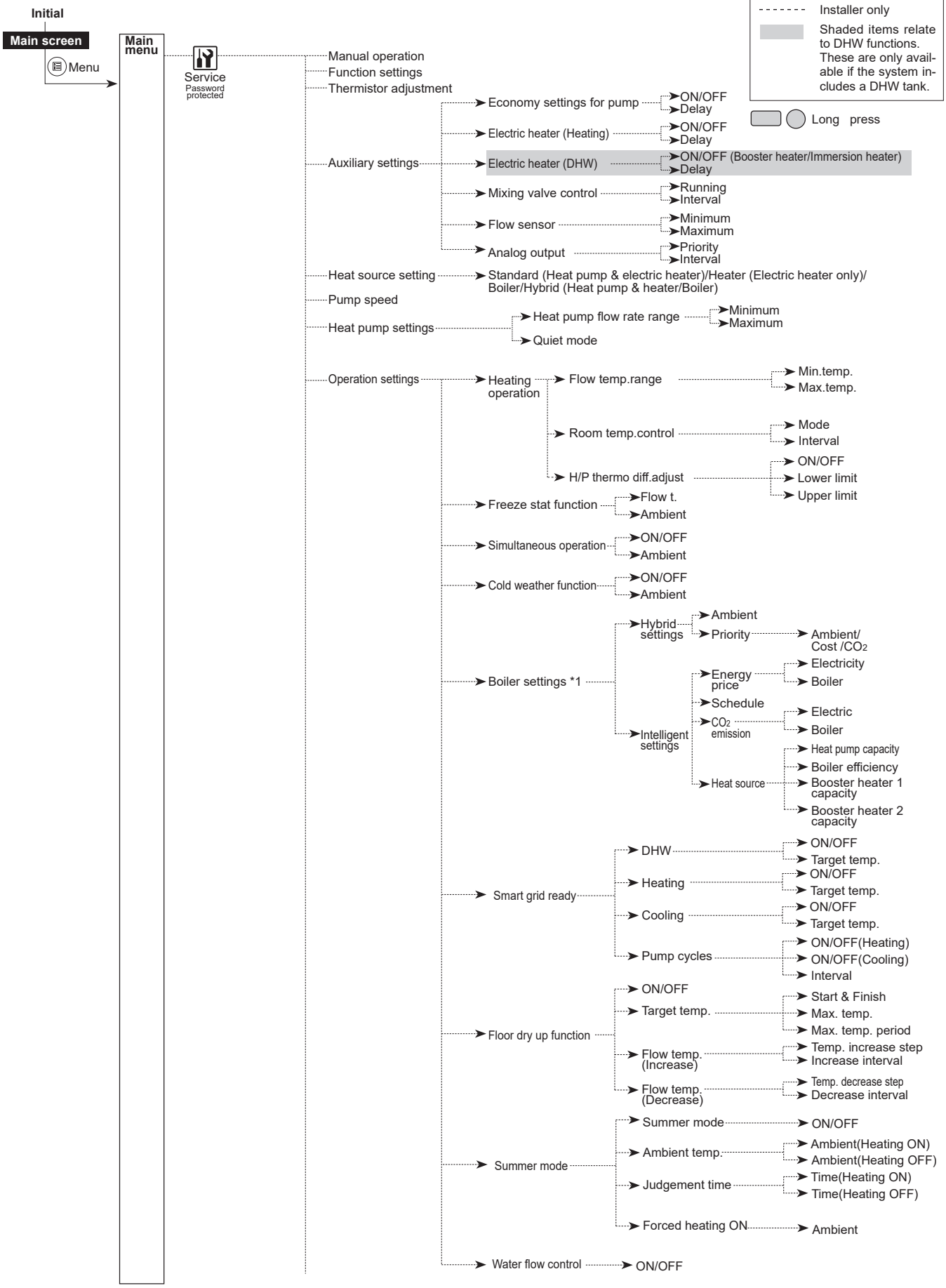


*1 For more details, refer to the installation manual of PAC-TH012HT(L)-E.

<Continued from the previous page.>

**<Main Controller Menu Tree>**

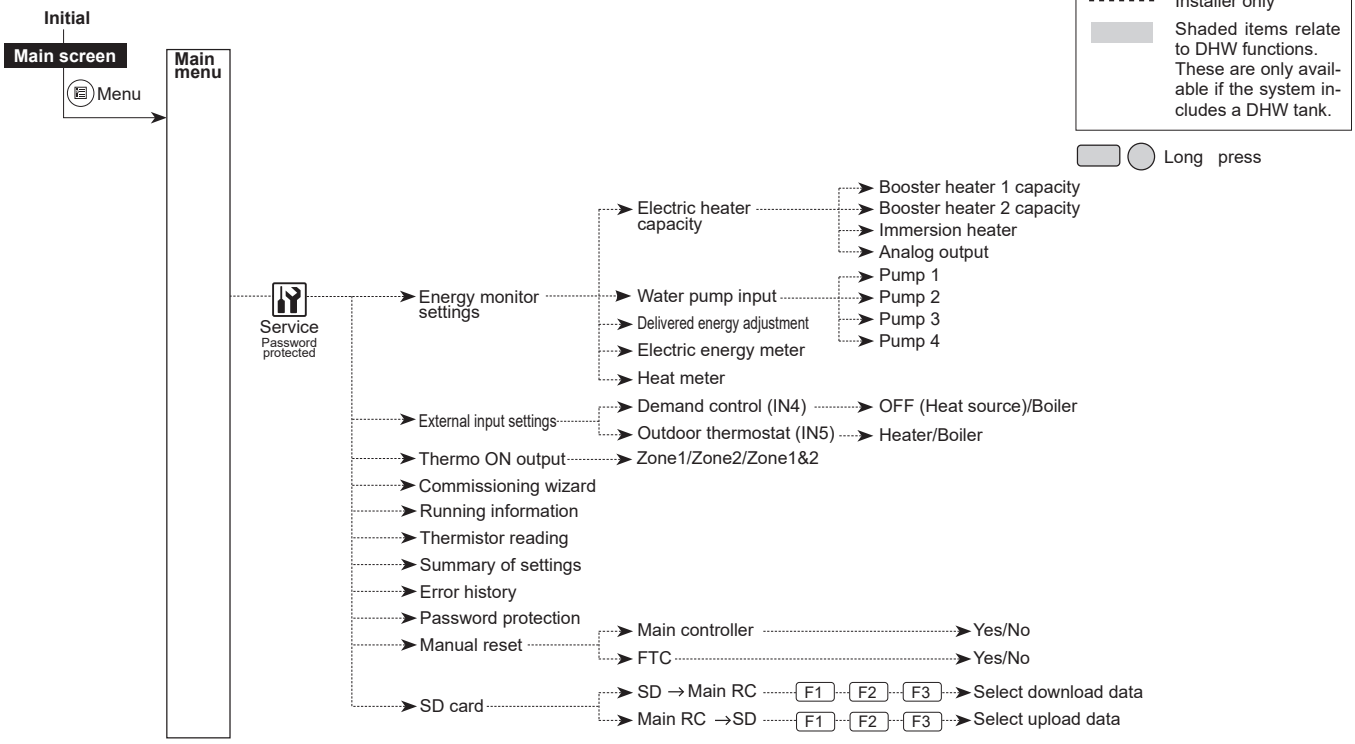


## Domestic Hot Water (DHW)/Legionella Prevention

The domestic hot water and legionella prevention menus control the operation of DHW tank heat ups.

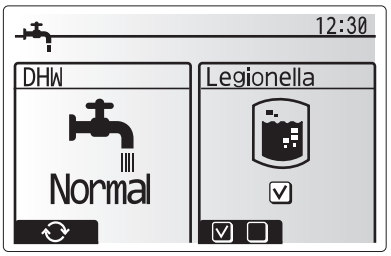


**<DHW mode settings>**

1. Highlight the hot water icon and press CONFIRM.
2. Use button F1 to switch between Normal and ECO heating modes.
3. To edit the mode, press down the MENU button for 3 seconds, then select “hot water”.
4. Press F2 key to display the HOTWATER (DHW) SETTING menu.
5. Use F2 and F3 keys to scroll through the menu selecting each component in turn by pressing CONFIRM. See the table below for description of each setting.
6. Enter the desired number using the function keys and press CONFIRM.

| Menu subtitle | Function | Range | Unit | Default value |
|---|---|---|---|---|
| DHW max. temp. | Desired temperature of stored hot water | 40 - 60 | °C | 50 |
| DHW max. temp. drop | Difference in temperature between DHW max. temp. and the temperature at which DHW mode restarts | 5 - 30 * | °C | 10 |
| DHW max. operation time | Max. time allowed for stored water heating DHW mode | 30 - 120 | min | 60 |
| DHW mode restriction | The time period after DHW mode when space heating has priority over DHW mode temporarily preventing further stored water heating<br>(Only when DHW max. operation time has passed.) | 30 - 120 | min | 30 |

* When the DHW max. temp is set over 55 °C, the temperature at which DHW mode restarts must be less than 50 °C to protect the device.

**<Eco mode>**

DHW mode can run in either ‘Normal’ or ‘Eco’ mode. Normal mode will heat the water in the DHW tank more quickly using the full power of the heat pump. Eco mode takes a little longer to heat the water in the DHW tank but the energy used is reduced. This is because heat pump operation is restricted using signals from the FTC based on measured DHW tank temperature.

**Note: The actual energy saved in Eco mode will vary according to outdoor ambient temperature.**

**<DHW recharge>**

Select the amount of DHW tank.

Return to the DHW/legionella prevention menu.

### Legionella Prevention Mode settings (LP mode)

1. Use button F3 to choose legionella mode active YES/NO.
2. To edit the legionella function, press down the MENU button for 3 seconds and select “hot water”, then press F4 key.
3. Use F1 and F2 keys to scroll through the menu selecting each subtitle in turn by pressing CONFIRM. See the table below for description of each setting.
4. Enter the desired number using the function keys and press CONFIRM.

During Legionella Prevention Mode the temperature of the stored water is increased above 60°C to inhibit legionella bacterium growth. It is strongly recommended that this is done at regular intervals. Please check local regulations for the recommended frequency of heat ups.

Please note that LP mode uses the assistance of electric heaters to supplement the energy input of the heat pump. Heating water for long periods of time is not efficient and will increase running costs. The installer should give careful consideration to the necessity of legionella prevention treatment whilst not wasting energy by heating the stored water for excessive time periods. The end user should understand the importance of this feature.
**ALWAYS COMPLY WITH LOCAL AND NATIONAL GUIDANCE FOR YOUR COUNTRY REGARDING LEGIONELLA PREVENTION.**

**Note: When failures occur on the FTC unit, the LP mode may not function normally.**

| Menu subtitle | Function | Range | Unit | Default value |
|---|---|---|---|---|
| Hot water temp. | Desired temp. of stored hot water | 60–70 | °C | 65 |
| Frequency | Time between LP mode DHW tank heat up | 1–30 | day | 15 |
| Start time | Time when LP mode will begin | 0:00–23:00 | - | 03:00 |
| Max. operation time | Maximum time allowed for LP mode DHW tank heat | 1–5 | hour | 3 |
| Duration of max. temp. | The time period after LP mode desired water temp. has been reached | 1–120 | min | 30 |

## Initial Settings

**<Room sensor settings>**
For room sensor settings it is important to choose the correct room sensor depending on the heating mode the system will operate in.

1. From the Initial settings menu select Room sensor settings.

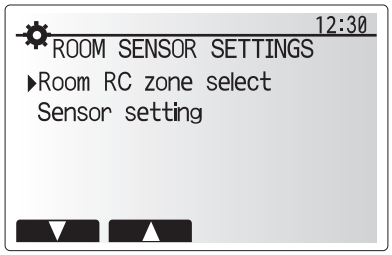


2. When 2-zone temperature control is active and wireless remote controllers are available, from Room RC zone select screen, select zone No. to assign to each remote controller.

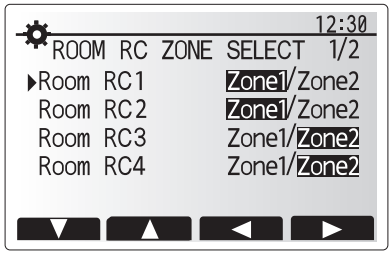


3. From Sensor setting screen, select a room sensor to be used for monitoring the room temperature from Zone1 and Zone2 separately.

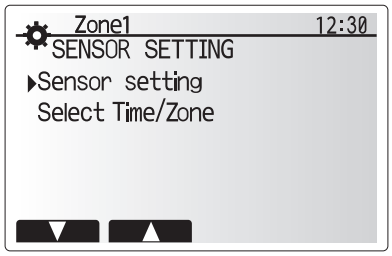


4. From Sensor setting screen, select Time/Zone to make it possible to use different room sensors according to the time schedule set in the Select Time/Zone menu. The room sensors can be switched up to 4 times within 24 hours.

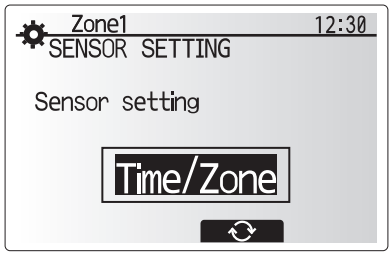

## Service Menu

The service menu provides functions for use by installer or service engineer. It is NOT intended the home owner alters settings within this menu. It is for this reason password protection is required to prevent unauthorised access to the service settings.

The factory default password is "0000".
Follow the procedure described in General Operation for the set up operation.

Many functions can not be set whilst the indoor unit is running. The installer should turn off the unit before trying to set these functions. If the installer attempts to change the settings whilst the unit is running the main remote controller will display a reminder message prompting the installer to stop operation before continuing. By selecting “Yes” the unit will cease operation.

### <Manual operation>

During the filling of the system the primary circuit circulation pump and 3-way valve can be manually overridden using manual operation mode.
When manual operation is selected a small timer icon appears in the screen.
When selected, this function will only remain in manual operation for a maximum of 2 hours. This is to prevent accidental permanent override of the FTC.

►Example
Pressing F3 button will switch manual operation mode ON for the main 3-way valve. When filling of the DHW tank is complete the installer should access this menu again and press F3 to deactivate manual operation of the part.
Alternatively after 2 hours manual operation mode will no longer be active and FTC can resume control of the hydrobox.

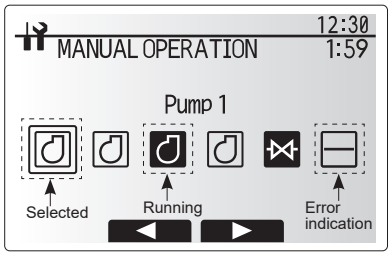

Manual operation menu screen

Manual operation and heat source setting can not be selected if the system is running. A screen will be displayed asking the installer to stop the system before these modes can be activated.
The system automatically stops 2 hours after last operation.

### <Auxiliary settings>

Refer to Page C-21.

### <Operation settings>

**Heating operation**

This function allows operational setting of flow temperature range from the Ecodan and also the time interval at which the FTC collects and processes data for the auto adaptation mode.

| Menu subtitle | | Function | Range | Unit | Default |
|---|---|---|---|---|---|
| Flow temp. range | Minimum temp. | To minimize the loss by frequent ON and OFF in mild outdoor ambient temperature seasons. | 20 to 45 | ºC | 30 |
| | Maximum temp. | To set max. possible flow temperature according to the type of heat emitters. | 35 to 60 | ºC | 50 |
| Room temp. control | Mode | Setting for Room temp. control<br>At Fast mode, target outlet water temperature is set higher than the one set at normal mode. This reduces the time to reach the target room temperature when the room temperature is relatively low.* | Normal/ Fast | — | Normal |
| | Interval | Selectable according to the heat emitter type and the materials of floor (i.e. radiators, floor heating-thick, -thin concrete, wood, etc.) | 10 to 60 | min | 10 |
| Heat pump thermo diff.adjust | On/Off | To minimize the loss by frequent ON and OFF in mild outdoor ambient temperature seasons. | On/Off | — | On |
| | Lower limit | Prohibits heat pump operation until the flow temperature drops below the target flow temperature plus lower limit value. | −9 to −1 | ºC | −5 |
| | Upper limit | Allows heat pump operation until the flow temperature rises above the target flow temperature plus upper limit value. | +3 to +5 | ºC | +5 |

<Table 7.1> Heating operation (Room temp. control table)

**Note:**
1. The minimum flow temperature that prohibits heat pump operation is 20ºC.
2. The maximum flow temperature that allows heat pump operation equals to the maximum temperature set in the Flow temp. range menu.

* Fast mode is not efficient and will increase running cost when compared to normal mode.

**Freeze stat function**

| Menu subtitle | | Function/ Description |
|---|---|---|
| Freeze stat function *1 | | An operational function to prevent the water circuit from freezing when outdoor ambient temperature drops. |
| | Flow t. | The target outlet water temperature at water circuit when operating in Freeze stat function. *2 |
| | Outdoor ambient temp. | Minimum outdoor ambient temperature which freeze stat function will begin to operate,<br>(3 - 20ºC) or choose**. If asterisk (**) is chosen freeze stat function is deactivated. (i.e. primary water freeze risk)" |

*1. When the system is turned off, freeze stat function is not enabled.
*2. Flow t. is fixed to 20°C and unchangeable.

**Simultaneous Operation**

For periods of very low outside temperature this mode can be used. Simultaneous operation allows both DHW and space heating to run together by using the heat pump and/or booster heater to provide space heating whilst only the immersion heater provides heating for DHW. This operation is only available if BOTH a DHW tank AND immersion heater are present on the system.

- Range of outdoor ambient temperature at which simultaneous operation starts is −30°C to 10°C (default −15°C).
- System shall automatically return to routine operation. This will happen when the outdoor ambient temperature rises above the selected temperature for this specific mode of operation.

### <Floor dry up function>

The Floor dry up function automatically changes the target hot water temperature in stages to gradually dry concrete when this particular type of underfloor heating system is installed.

Upon completion of the operation the system stops all the operations except the Freeze stat. operation.
For Floor dry up function, the target flow temp. of Zone1 is the same as that of Zone2.

- This function is not available when a PUHZ-FRP outdoor unit is connected.
- Disconnect wiring to external inputs of room thermostat, demand control, and outdoor thermostat, or the target flow temperature may not be maintained.

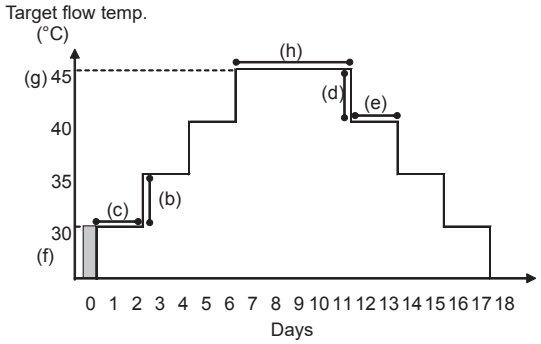


| Functions | | Symbol | Description | Option/Range | Unit | Default |
|---|---|---|---|---|---|---|
| Floor dry up function | | a | Set the function to ON and power on the system using the main remote controller, and the dry up heating operation will start. | On/Off | — | Off |
| Flow temp. (increase) | Flow temp. increase step | b | Sets the increase step of the target flow temperature. | +1 to +10 | ºC | +5 |
| | Increase interval | c | Sets the period for which the same target flow temperature is maintained. | 1 to 7 | day | 2 |
| Flow temp. (decrease) | Flow temp. decrease step | d | Sets the decrease step of the target flow temperature. | −1 to −10 | ºC | −5 |
| | Decrease interval | e | Sets the period for which the same target flow temperature is maintained. | 1 to 7 | day | 2 |
| Target temperature | Start & Finish | f | Sets the target flow temperature at the start and the finish of the operation. | 20 to 60 | ºC | 30 |
| | Max. target temp. | g | Sets the maximum target flow temperature. | 20 to 60 | ºC | 45 |
| | Max. temp. period | h | Sets the period for which the maximum target flow temperature is maintained. | 1 to 20 | day | 5 |

### <Energy monitor settings>

In this menu, all parameters required to record the consumed electrical energy and the delivered heat energy which is displayed on the main remote controller can be set. The parameters are an electric heater capacity, supply power of water pump and heat meter pulse.

Follow the procedure described in General Operation for the set up operation.

For Pump 1, *** can be also set besides this setting.
In the case *** is selected, the system acknowledges "factory fitted pump" is selected.
Refer to 3.7 Energy Monitor.

### <External input settings>

**Demand control(IN4)**

The selection of “OFF”, whilst a signal is being sent to IN4, forcefully stops all the heat source operations and the selection of “Boiler” stops operations of heat pump and electric heater and performs boiler operation.

**Outdoor thermostat (IN5)**

The selection of “Heater”, whilst a signal is being sent to IN5, performs electric-heater-only operation and the selection of “Boiler” performs boiler operation.

### <Password protection>

Password protection is available to prevent unauthorised access to the service menu by untrained persons.

**Resetting the password**

If you forget the password you entered, or have to service a unit somebody else installed, you can reset the password to the factory default of **0000**.

1. From the main settings menu scroll down the functions until Service Menu is highlighted.
2. Press CONFIRM.
3. You will be prompted to enter a password.
4. Hold down buttons F3 and F4 together for 3 seconds.
5. You will be asked if you wish to continue and reset the password to default setting.
6. To reset press button F3.
7. The password is now reset to **0000**.

Password input screen

Password verify screen

### <Manual reset>

Should you wish to restore the factory settings at any time you should use the manual reset function. Please note this will reset ALL functions to the factory default settings.

## ■ Engineers Forms

Should settings be changed from default, please enter and record new setting in 'Field Setting' column. This will ease resetting in the future should the system use change or the circuit board need to be replaced.

**Commissioning/Field settings record sheet**

| Main remote controller screen | | | | Parameters | Default setting | Field setting | Notes |
|---|---|---|---|---|---|---|---|
| **Main** | | | Zone1 heating room temp. | 10°C to 30°C | 20°C | | |
| | | | Zone2 heating room temp. *14 | 10°C to 30°C | 20°C | | |
| | | | Zone1 heating flow temp. | 20°C to 60°C | 45°C | | |
| | | | Zone2 heating flow temp. *1 | 20°C to 60°C | 35°C | | |
| | | | Zone1 cooling flow temp. *12 | 5°C to 25°C | 15°C | | |
| | | | Zone2 cooling flow temp. *12 | 5°C to 25°C | 20°C | | |
| | | | Zone1 heating compensation curve | −9°C to + 9°C | 0°C | | |
| | | | Zone2 heating compensation curve *1 | −9°C to + 9°C | 0°C | | |
| | | | Holiday mode | Active/Non active/Set time | — | | |
| **Option** | | | Forced DHW operation | On/Off | — | | |
| | | | DHW | On/Off/Timer | On | | |
| | | | Heating/Cooling | On/Off/Timer | On | | |
| | | | Energy monitor | Consumed electrical energy/Delivered energy | — | | |
| **Setting** | DHW *13 | | Operation mode | Normal/Eco *16 | Normal | | |
| | | | DHW max. temp. | 40°C to 60°C *2 | 50°C | | |
| | | | DHW temp. drop | 5°C to 30°C | 10°C | | |
| | | | DHW max. operation time | 30 to 120 min | 60 min | | |
| | | | DHW mode restriction | 30 to 120 min | 30 min | | |
| | | | DHW recharge | Large/Standard | Large *19 | | |
| | Legionella prevention *13 | | Active | Yes/No | Yes | | |
| | | | Hot water temp. | 60°C to 70°C *2 | 65°C | | |
| | | | Frequency | 1 to 30 days | 15 days | | |
| | | | Start time | 00.00 to 23.00 | 03.00 | | |
| | | | Max. operation time | 1 to 5 hours | 3 hours | | |
| | | | Duration of maximum temp. | 1 to 120 min | 30 min | | |
| | Heating/ Cooling *12 | | Zone1 operation mode | Heating room temp./ Heating flow temp./ Heating compensation curve/ Cooling flow temp. | Room temp. | | |
| | | | Zone2 operation mode *1 | Heating room temp./ Heating flow temp./ Heating compensation curve/ Cooling flow temp. | Compensation curve | | |
| | Compensation curve | Hi flow temp. set point | Zone1 outdoor ambient temp. | −30°C to +33°C *3 | −15°C | | |
| | | | Zone1 flow temp. | 20°C to 60°C | 50°C | | |
| | | | Zone2 outdoor ambient temp. *1 | −30°C to +33°C *3 | −15°C | | |
| | | | Zone2 flow temp. *1 | 20°C to 60°C | 40°C | | |
| | | Lo flow temp. set point | Zone1 outdoor ambient temp. | −28°C to +35°C *4 | 35°C | | |
| | | | Zone1 flow temp. | 20°C to 60°C | 25°C | | |
| | | | Zone2 outdoor ambient temp. *1 | −28°C to +35°C *4 | 35°C | | |
| | | | Zone2 flow temp. *1 | 20°C to 60°C | 25°C | | |
| | | Adjust | Zone1 outdoor ambient temp. | −29°C to +34°C *5 | — | | |
| | | | Zone1 flow temp. | 20°C to 60°C | — | | |
| | | | Zone2 outdoor ambient temp. *1 | −29°C to +34°C *5 | — | | |
| | | | Zone2 flow temp. *1 | 20°C to 60°C | — | | |
| | Holiday | | DHW *13 | Active/Non active | Non active | | |
| | | | Heating/ Cooling *12 | Active/Non active | Active | | |
| | | | Zone1 heating room temp. | 10°C to 30°C | 15°C | | |
| | | | Zone2 heating room temp. *14 | 10°C to 30°C | 15°C | | |
| | | | Zone1 heating flow temp. | 20°C to 60°C | 35°C | | |
| | | | Zone2 heating flow temp. *1 | 20°C to 60°C | 25°C | | |
| | | | Zone1 cooling flow temp. *12 | 5°C to 25°C | 25°C | | |
| | | | Zone2 cooling flow temp. *12 | 5°C to 25°C | 25°C | | |
| | Initial settings | | Language | EN/FR/DE/SV/ES/IT/DA/NL/FI/NO/PT/BG/PL/CZ/RU/TR/SL | EN | | |
| | | | °C/°F | °C/°F | °C | | |
| | | | Summer time | On/Off | Off | | |
| | | | Temp. display | Room/DHW tank/Room&DHW tank /Off | Off | | |
| | | | Time display | hh:mm/hh:mm AM/AM hh:mm | hh:mm | | |
| | | | Room sensor settings for Zone1 | TH1/Main RC/Room RC1 to 8/"Time/Zone" | TH1 | | |
| | | | Room sensor settings for Zone2 *1 | TH1/Main RC/Room RC1 to 8/"Time/Zone" | TH1 | | |
| | | | Room RC zone select *1 | Zone1/Zone2 | Zone1 | | |

(Continued to next page.)

## ■ Engineers Forms

**Commissioning/Field settings record sheet**

| Main remote controller screen | | | | | Parameters | | | Default setting | Field setting | Notes |
|---|---|---|---|---|---|---|---|---|---|---|
| Setting | Service menu | Thermistor adjustment | | THW1 | −10°C to +10°C | | | 0°C | | |
| | | | | THW2 | −10°C to +10°C | | | 0°C | | |
| | | | | THW5B | −10°C to +10°C | | | 0°C | | |
| | | | | THW6 | −10°C to +10°C | | | 0°C | | |
| | | | | THW7 | −10°C to +10°C | | | 0°C | | |
| | | | | THW8 | −10°C to +10°C | | | 0°C | | |
| | | | | THW9 | −10°C to +10°C | | | 0°C | | |
| | | | | THW10 | −10°C to +10°C | | | 0°C | | |
| | | | | THWB1 | −10°C to +10°C | | | 0°C | | |
| | | Auxiliary settings | | Economy settings for pump. | On/Off *6 | | | On | | |
| | | | | | Delay (3 - 60 min) | | | 10 min | | |
| | | | | Electric heater (Heating) | Space heating: On (used)/Off (not used) | | | On | | |
| | | | | | Electric heater delay timer (5 to 180 min) | | | 30 min | | |
| | | | | Electric heater (DHW) *13 | Booster heater | DHW: On (used)/Off (not used) | | On | | |
| | | | | | Immersion heater | DHW: On (used)/Off (not used) | | On | | |
| | | | | | Electric heater delay timer (15 to 30 min) | | | 15 min | | |
| | | | | Mixing valve control | Running (10 to 240 sec) | | | 120 sec | | |
| | | | | | Interval (1 to 30 min) | | | 2 min | | |
| | | | | Flow sensor *18 | Minimum (0 to 100 L/min) | | | 5 L/min | | |
| | | | | | Maximum (0 to 100 L/min) | | | 100 L/min | | |
| | | | | Analog output | Interval (1 to 30 min) | | | 5 min | | |
| | | | | | Priority (Normal/High) | | | Normal | | |
| | | Pump speed | | DHW | Pump speed (1 to 5) | | | 5 | | |
| | | | | Heating/Cooling | Pump speed (1 to 5) | | | 5 | | |
| | | Heat source setting | | | Standard/Heater/Boiler/Hybrid *7 | | | Standard | | |
| | | Heat pump setting | | Heat pump flow rate range | | Minimum (0 to 100 L/min) | | 5 L/min | | |
| | | | | | | Maximum (0 to 100 L/min) | | 100 L/min | | |
| | | | | Quiet mode | | Day (Mon to Sun) | | — | | |
| | | | | | | Time | | 0:00 - 23:45 | | |
| | | | | | | Quiet level (Normal/ Level1/ Level2) | | Normal | | |
| | | Operation settings | Heating operation | Flow temp.range *10 | Min.temp. (20 to 45°C) | | | 30°C | | |
| | | | | | Max.temp. (35 to 60°C) | | | 50°C | | |
| | | | | Room temp.control *15 | Mode (Normal/Fast) | | | Normal | | |
| | | | | | Interval (10 to 60min) | | | 10min | | |
| | | | | Heat pump thermo diff.adjust | On/Off *6 | | | On | | |
| | | | | | Lower limit (−9 to −1°C) | | | −5°C | | |
| | | | | | Upper limit (+3 to +5°C) | | | 5°C | | |
| | | | Freeze stat function *11 | | Outdoor ambient temp. (3 to 20°C) / ** | | | 5°C | | |
| | | | Simultaneous operation (DHW/ Heating) | | On/Off *6 | | | Off | | |
| | | | | | Outdoor ambient temp. (−30 to +10°C) *3 | | | −15°C | | |
| | | | Cold weather function | | On/Off *6 | | | Off | | |
| | | | | | Outdoor ambient temp. (−30 to −10°C) *3 | | | −15°C | | |
| | | | Boiler operation | | Hybrid settings | Outdoor ambient temp. (−30 to +10°C) *3 | | −15°C | | |
| | | | | | | Priority mode (Ambient/Cost/$CO_2$) *17 | | Ambient | | |
| | | | | | | Outdoor ambient temp. rise (+1 to +5 °C) | | +3 °C | | |
| | | | | | Intelligent settings | Energy price *9 | Electricity (0.001 to 999 */kWh) | 0.5 */kWh | | |
| | | | | | | | Boiler (0.001 to 999 */kWh) | 0.5 */kWh | | |
| | | | | | | $CO_2$ emission | Electricity (0.001 to 999 kg -$CO_2$/kWh) | 0.5 kg -$CO_2$/ kWh | | |
| | | | | | | | Boiler (0.001 to 999 kg -$CO_2$/kWh) | 0.5 kg -$CO_2$/ kWh | | |
| | | | | | | Heat source | Heat pump capacity (1 to 40 kW) | 11.2 kW | | |
| | | | | | | | Boiler efficiency (25 to 150%) | 80% | | |
| | | | | | | | Booster heater 1 capacity (0 to 30 kW) | 2 kW | | |
| | | | | | | | Booster heater 2 capacity (0 to 30 kW) | 4 kW | | |

(Continued to next page.)

## ■ Engineers Forms

**Commissioning/Field settings record sheet (continued from the previous page)**

| Main remote controller screen | | | | | Parameters | | Default setting | Field setting | Notes |
|---|---|---|---|---|---|---|---|---|---|
| | Service menu | Operation settings | Smart grid ready | DHW | On/Off | | Off | | |
| | | | | | Target temp(+1- +20°C) / -- (Non active) | | -- | | |
| | | | | Heating | On/Off | | Off | | |
| | | | | | Target temp. | Switch-on recommendation (20 - 60°C) | 50°C | | |
| | | | | | | Switch-on command (20 - 60°C) | 55°C | | |
| | | | | Cooling | On/Off | | Off | | |
| | | | | | Target temp. | Switch-on recommendation (5 - 25°C) | 15°C | | |
| | | | | | | Switch-on command (5 - 25°C) | 10°C | | |
| | | | | Pump cycles | Heating (On/Off) | | On | | |
| | | | | | Cooling (On/Off) | | On | | |
| | | | | | Interval (10-120 min) | | 10 min | | |
| | | | Floor dry up function | | On/Off *6 | | Off | | |
| | | | | | Target temp. | Start&Finish (20 - 60°C) | 30°C | | |
| | | | | | | Max. temp. (20 - 60°C) | 45°C | | |
| | | | | | | Max. temp. period (1 - 20 days) | 5 days | | |
| | | | | | Flow temp. (Increase) | Temp. increase step (+1 - +10°C) | +5°C | | |
| | | | | | | Increase interval (1 - 7 days) | 2 days | | |
| | | | | | Flow temp. (Decrease) | Temp. decrease step (−1 - −10°C) | −5°C | | |
| | | | | | | Decrease interval (1 - 7 days) | 2 days | | |
| | | | Summer mode | | On/Off | | Off | | |
| | | | | | Outdoor ambient temp. | Heating ON (4-19°C) | 10°C | | |
| | | | | | | Heating OFF (5-20°C) | 15°C | | |
| | | | | | Judgement time | Heating ON (1-48 hours) | 6 hours | | |
| | | | | | | Heating OFF (1-48 hours) | 6 hours | | |
| | | | | | Forced heating ON (-30 - 10°C) | | 5 °C | | |
| | | | Water flow control | | On/Off | | Off | | |
| | | Energy monitor settings | Electric heater capacity | Booster heater 1 capacity | 0 - 30 kW | | 2 kW | | |
| | | | | Booster heater 2 capacity | 0 - 30 kW | | 4 kW | | |
| | | | | Immersion heater capacity | 0 - 30 kW | | 0 kW | | |
| | | | | Analog output | 0 - 30 kW | | 0 kW | | |
| | | | Delivered energy adjustment | | −50 - +50% | | 0% | | |
| | | | Water pump input | Pump 1 | 0 - 200 W or ***(factory fitted pump) | | *** | | |
| | | | | Pump 2 | 0 - 200 W | | 0 W | | |
| | | | | Pump 3 | 0 - 200 W | | 0 W | | |
| | | | | Pump 4 *19 | 0 - 200 W | | 72 W | | |
| | | | Electric energy meter *8 | | 0.1/1/10/100/1000 pulse/kWh | | 1000 pulse/kWh | | |
| | | | Heat meter *8 | | 0.1/1/10/100/1000 pulse/kWh | | 1000 pulse/kWh | | |
| | | External input settings | Demand control (IN4) | | Heat source OFF/Boiler operation | | Boiler operation | | |
| | | | Outdoor thermostat (IN5) | | Heater operation/Boiler operation | | Boiler operation | | |
| | | Thermo ON output | | | Zone1/Zone2/Zone1&2 | | Zone1&2 | | |

*1 The settings related to Zone2 can be switched only when 2 Zone temperature control is enabled (when DIP SW2-6 and SW 2-7 are ON).
*2 For the model without both booster and immersion heater, it may not reach the set temperature depending on the outside ambient temperature.
*3 The lower limit is -15°C depending on the connected outdoor unit.
*4 The lower limit is -13°C depending on the connected outdoor unit.
*5 The lower limit is -14°C depending on the connected outdoor unit.
*6 On: the function is active; Off: the function is inactive.
*7 When DIP SW1-1 is set to OFF “WITHOUT Boiler” or SW2-6 is set to OFF “WITHOUT Mixing tank”, neither Boiler nor Hybrid can be selected.
*8 The default setting is 1 pulse/kWh depending on the connected indoor unit.
*9 “*” of “*/kWh” represents currency unit (e.g. € or £ or the like)
*10 Valid only when operating in Heating room temperature.
*11 If asterisk (**) is chosen freeze stat function is deactivated. (i.e. primary water freeze risk)
*12 Cooling mode settings are available for ERS* model only.
*13 Only available if DHW tank present in system.
*14 The settings related to Zone2 can be switched only when 2-zone temperature control or 2-zone valve ON/OFF control is active.
*15 When DIP SW5-2 is set to OFF, the function is active.
*16 When the hydrobox is connected with a PUMY-P outdoor unit, the mode is fixed to “Normal”.
*17 When the hydrobox is connected with a PUMY-P outdoor unit, the mode is fixed to “Ambient”.
*18 Do not change the setting since it is set according to the specification of flow sensor attached to the hydrobox.
*19 This setting is valid for only cylinder units.

**<Troubleshooting by inferior phenomena>**

| No. | Fault symptom | Possible cause | Explanation - Solution |
|---|---|---|---|
| 1 | Main remote controller display is blank. | 1. There is no power supply to main remote controller.<br><br>2. Power is supplied to main remote controller, however, the display on the main remote controller does not appear. | 1. Check LED2 on FTC (Main). (See <Figure 4.5.1>.)<br>(i) When LED2 is lit.<br>Check for damage or contact failure of the main remote controller wiring.<br>(ii) When LED2 is blinking.<br>Refer to No. 5 below.<br>(iii) When LED2 is not lit.<br>Refer to No. 4 below.<br>2. Check the following:<br>• Disconnection between the main remote controller cable and the FTC (Main) control board<br>• Failure of the main remote controller if “Please Wait” is not displayed.<br>• Refer to No. 2 below if “Please Wait” is displayed. |
| 2 | “Please Wait” remains displayed on the main remote controller. | 1. "Please Wait" is displayed for up to 6 minutes.<br>2. Communication failure between the main remote controller and FTC (Main).<br>3. Communication failure between FTC (Main) and outdoor unit. | 1. Normal operation.<br>2, 3. Main remote controller start up checks/procedure.<br>(i) If “0%” or “50-99%” is displayed below "Please Wait" there is a communication error between the main remote controller and the FTC (Main) control board.<br>• Check wiring connections on the main remote controller.<br>• Replace the main remote controller or the FTC (Main) control board.<br>(ii) If “1-49%” is displayed there is a communication error between the outdoor unit's and FTC (Main) control boards.<br>• Check the wiring connections on the outdoor unit control board and the FTC (Main) control board.<br>(Ensure S1 and S2 are not cross-wired and S3 is securely wired with no damage. (See section 4.1.)<br>• Replace the outdoor unit's and/or the FTC (Main) control boards. |
| 3 | The main screen appears with a press of the “ON” button, but disappears in a second. | The main remote controller operations do not work for a whilst after the settings are changed in the service menu. This is because the system takes time to apply the changes. | Normal operation.<br>The indoor unit is applying updated settings made in the service menu. Normal operation will start shortly. |
| 4 | LED2 on FTC (Main) is off.<br>(See <Figure 4.5.1>.) | When LED1 on FTC (Main) is also off. (See <Figure 4.5.1>.)<br><FTC (Main) powered via outdoor unit.><br>1. The outdoor unit is not supplied at the rated voltage.<br><br>2. Defective outdoor controller circuit board<br><br>3. FTC (Main) is not supplied with 220 to 240V AC<br><br>4. FTC (Main) failure<br><br>5. Faulty connector wiring | 1. Check the voltage across the terminals L and N or L3 and N on the outdoor power board. (See section 4.1.)<br>• When the voltage is not 220 to 240V AC, check wiring of the outdoor unit and of the breaker.<br>• When the voltage is at 220 to 240V AC, go to “2.” below.<br>2. Check the voltage across the outdoor unit terminals S1 and S2. (See section 4.1.)<br>• When the voltage is not 220 to 240V AC, check the fuse on the outdoor control board and check for faulty wiring.<br>• When the voltage is 220 to 240V AC, go to “3.” below.<br>3. Check the voltage across the indoor unit terminals S1 and S2. (See section 4.1.)<br>• When the voltage is not 220 to 240V AC, check FTC (Main)-outdoor unit wiring for faults.<br>• When the voltage is 220 to 240V AC, go to “4.” below.<br>4. Check the FTC (Main) control board.<br>• Check the fuse on FTC (Main) control board.<br>• Check for faulty wiring.<br>• If no problem found with the wiring, the FTC (Main) control board is faulty.<br>5. Check the connector wiring.<br>• When the connectors are wired incorrectly, re-wire the connectors referring to below. (See section 4.1.)<br> 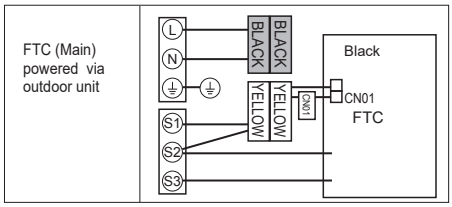 |

| No. | Fault symptom | Possible cause | Explanation - Solution |
|---|---|---|---|
| **4.** | LED2 on FTC (Main) is off.<br>(See Figure <4.5.1>) | <FTC (Main) powered on independent source><br>1. FTC (Main) is not supplied with 220 to 240V AC.<br><br>2. There are problems in the method of connecting the connectors.<br><br>3. FTC (Main) failure | 1. Check the voltage across the L and N terminals on the indoor power supply terminal block. (See section 4.1.)<br>• When the voltage is not 220 to 240V AC, check for faulty wiring to power supply.<br>• When the voltage is 220 to 240V AC, go to 2. below.<br>2. Check for faulty wiring between the connectors.<br>• When the connectors are wired incorrectly re-wire them correctly referring to below. (See section 4.1 and a wiring diagram on the control and electrical box cover.)<br> 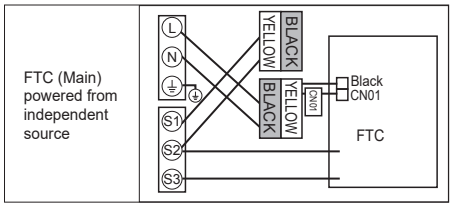 <br><br>• If no problem found with the wiring, go to 3. below.<br>3. Check the FTC (Main) control board.<br>• Check the fuse on FTC (Main) control board.<br>• Check for faulty wiring.<br>• If no problem found with the wiring, the FTC (Main) control board is faulty. |
| | | When LED1 on FTC (Main) is lit.<br>Incorrect setting of refrigerant address for outdoor unit.<br>(None of the refrigerant address is set to "0".) | Recheck the refrigerant address setting on the outdoor unit.<br>Set the refrigerant address to “0”.<br>(Set refrigerant address using SW1(3 - 6) on outdoor controller circuit board.) |
| 5 | LED2 on FTC (Main) is blinking.<br>(See Figure <4.5.1>) | When LED1 is also blinking on FTC (Main).<br>Faulty wiring between FTC (Main) and outdoor unit | Check for faulty wiring between FTC (Main) and outdoor unit. |
| | | When LED1 on FTC (Main) is lit.<br>1. Faulty wiring in main remote controller<br>Multiple indoor units have been wired to a single outdoor unit.<br>2. Short-circuited wiring in main remote controller<br>3. Main remote controller failure | 1. Check for faulty wiring in main remote controller.<br>The number of indoor units that can be wired to a single outdoor unit is one. Additional indoor units must be wired individually to a single outdoor unit.<br>2.,3. Remove main remote controller wires and check LED2 on FTC (Main). (See Figure 4.5.1.)<br>• If LED2 is blinking check for short circuits in the main remote controller wiring .<br>• If LED2 is lit, wire the main remote controller again and:<br>- if LED2 is blinking, the main remote controller is faulty;<br>- if LED2 is lit, faulty wiring of the main remote controller has been corrected. |
| 6 | LED4 on FTC (Main) is off.<br>(See figure <4.5.1>) | 1. SD memory card is NOT inserted into the memory card slot with correct orientation.<br>2. Not an SD standards compliant memory card. | 1. Correctly insert SD memory card in place until a click is heard.<br>2. Use an SD standards compliant memory card. (Refer to section 4.11.) |
| | LED4 on FTC (Main) is blinking.<br>(See Figure <4.5.1>) | 1. Full of data.<br>2. Write-protected.<br>3. NOT formatted.<br>4. Formatted in NTFS file system. | 1. Move or delete data, or replace SD memory card with a new one.<br>2. Release the write-protect switch.<br>3. Refer to "4.11 Using SD memory card".<br>4. FTC is Not compatible with NTFS file system. Use an SD memory card formatted in FAT file system. |
| 7 | No water at hot tap. | 1. Cold main off<br>2. Strainer (local supply) blocked. | 1. Check and open stop cock.<br>2. Isolate water supply and clean strainer. |
| 8 | Cold water at tap. | 1. Hot water run out.<br>2. Prohibit, schedule timer or holiday mode selected.<br>3. Heat pump not working.<br>4. Booster heater cut-out tripped.<br>5. The earth leakage circuit breaker for booster heater breaker (ECB1) tripped.<br>6. The booster heater thermal cut-out has tripped and cannot be reset using the manual reset button.<br>7. Immersion heater cut-out tripped.<br>8. Immersion heater breaker (ECB2) tripped.<br>9. 3-way valve fault | 1. Ensure DHW mode is operating and wait for DHW tank to re-heat.<br>2. Check settings and change as appropriate.<br>3. Check heat pump – consult outdoor unit service manual.<br>4. Check booster heater thermostat and press reset button if safe.<br>5. Check the cause and reset if safe.<br>6. Check resistance across the thermal cut-out, if open then the connection is broken and the booster heater will have to be replaced.<br>Contact your Mitsubishi Electric dealer.<br>7. Check immersion heater thermostat and press reset button, located on immersion heater boss, if safe. If the heater has been operated with no water inside it may have failed, so please replace it with a new one.<br>8. Check the cause and reset if safe.<br>9. Check plumbing/wiring to 3-way valve.<br>(i) Manually override 3-way valve using the main remote controller. (Refer to <Manual operation> in section 7.2.) If the valve does not still function, go to (ii) below.<br>(ii) Replace 3-way valve coil. If the valve does not still function, go to (iii) below.<br>(iii) Replace 3-way valve. (Refer to the service manual.) |

| No. | Fault symptom | Possible cause | Explanation - Solution |
|---|---|---|---|
| 9 | Water heating takes longer. | 1. Heat pump not working.<br>2. Booster heater cut-out tripped.<br>3. Booster heater breaker tripped.<br>4. The booster heater thermal cut-out has tripped and cannot be reset using the manual reset button.<br>5. Immersion heater cut-out has been triggered.<br>6. Immersion heater breaker tripped.<br>7. Decreased flow rate in DHW circuit. (Only when the external plate HEX for DHW is used.) | 1. Check heat pump – consult outdoor unit service manual.<br>2. Check booster heater thermostat and press reset button if safe.<br>3. Check the cause and reset if safe.<br>4. Check resistance across the thermal cut-out, if open then connection is broken and the booster heater will have to be replaced. Contact your Mitsubishi Electric dealer.<br>5. Check immersion heater thermostat and press reset button located on immersion heater boss, if safe. If the heater kept running with no water inside, this may have resulted in failure, so replace it with a new one.<br>6. Check the cause and reset if safe.<br>7. Check the water circulation pump 4 (DHW). |
| 10 | Temperature of DHW tank water dropped. | When DHW operation is not running, the DHW tank emits heat and the water temperature decreases to a certain level. If water in the DHW tank is reheated frequently because of a significant drop in water temperature, check for the following.<br>1. Water leakage in the pipes that connect to the DHW tank<br>2. Insulation material coming loose or off.<br>3. 3-way valve failure | 1. Take the following measures.<br>• Retighten the nuts holding the pipes onto the DHW tank.<br>• Replace seal materials.<br>• Replace the pipes.<br>2. Fix insulation.<br>3. Check plumbing/wiring to 3-way valve.<br>(i) Manually override 3-way valve using the main remote controller. (Refer to <Manual operation> in section 7.2.) If the valve does not still function, go to (ii) below.<br>(ii) Replace 3-way valve coil. If the valve does not still function, go to (iii) below.<br>(iii) Replace 3-way valve. (Refer to the service manual.) |
| 11 | Hot or warm water from cold tap. | Heat of hot water pipe is transferred to cold water pipe. | Insulate/re-route pipework. |
| 12 | Water leakage | 1. Poorly sealed connections of water circuit components<br>2. Water circuit components reaching the end of life | 1. Tighten connections as required.<br>2. Refer to PARTS CATALOG in the service manual for expected part lifetimes and replace them as necessary. |
| 13 | Heating system does not reach the set temperature. | 1. Prohibit, schedule timer or holiday mode selected.<br>2. Check settings and change as appropriate.<br>3. The temperature sensor is located in a room that has a different temperature relative to that of the rest of the house.<br>4. Heat pump not working.<br>5. Booster heater cut-out tripped.<br>6. Booster heater breaker (ECB1) tripped.<br>7. The booster heater thermal cut-out tripped and can not be reset using the manual reset button.<br>8. Incorrectly sized heat emitter.<br>9. 3-way valve failure<br>10. Battery problem (*wireless control only)<br>11. If a mixing tank is installed, the flow rate between the mixing tank and the heat exchanger is less than that between the mixing tank and the local system. | 1. Check settings and change as appropriate.<br>2. Check the battery power and replace if flat.<br>3. Relocate the temperature sensor to a more suitable room.<br>4. Check heat pump – consult outdoor unit service manual.<br>5. Check booster heater thermostat and press reset button if safe.<br>6. Check the cause of the trip and reset if safe.<br>7. Check resistance across the thermal cut-out, if open then the connection is broken and the booster heater will have to be replaced. Contact your Mitsubishi Electric dealer.<br>8. Check the heat emitter surface area is adequate Increase size if necessary.<br>9. Check plumbing/wiring to 3-way valve.<br>10. Check the battery power and replace it flat.<br>11. Increase the flow rate between the mixing tank and the heat exchanger decrease that between the mixing tank and the local system. |
| 14 | In 2-zone temperature control, only Zone2 does not reach the set temperature. | 1. When Zone1 and Zone2 are both in heating mode, the hot water temperature in Zone2 does not exceed that in Zone1.<br>2. Faulty wiring of motorized mixing valve<br>3. Faulty installation of motorized mixing valve<br>4. Incorrect setting of Running time<br>5. Motorized mixing valve failure | 1. Normal action no action necessary.<br>2. Refer to "4.7 Wiring for 2-zone temperature control".<br>3. Check for correct installation. (Refer to the manual included with each motorized mixing valve.)<br>4. Check for correct setting of Running time.<br>5. Inspect the mixing valve. (Refer to the manual included with each motorized mixing valve.) |
| 15 | After DHW operation room temperature rises slightly. | At the end of the DHW mode operation the 3-way valve diverts hot water away from the DHW circuit into space heating circuit.<br>This is done to prevent the system components from overheating.<br>The amount of hot water directed into the space heating circuit varies according to the type of the system. | Normal operation no action necessary. |

| No. | Fault symptom | Possible cause | Explanation - Solution |
|---|---|---|---|
| 16 | The room temperature rises during DHW operation. | 3-way valve failure | Check the 3-way valve. |
| 17 | Water discharges from pressure relief valve.<br>(Primary circuit) | 1. If continual – pressure relief valve may be damaged.<br>2. If intermittent – expansion vessel charge may have reduced/bladder perished. | 1. Turn the handle on the pressure relief valve to check for foreign objects in it. If the problem is not still solved, replace the pressure relief valve with a new one.<br>2. Check pressure in expansion vessel. Recharge to 1 bar if necessary. If bladder perished replace expansion vessel with a new one. |
| 18 | Water discharges from pressure relief valve (field supplied item).<br>(Sanitary circuit) | 1. If continual – field supplied pressure reducing valve not working.<br>2. If continual – pressure relief valve seat may be damaged.<br>3. If intermittent – expansion vessel charge may have reduced/bladder perished.<br>4. DHW tank may have subjected to backflow. | 1. Check function of pressure reducing valve and replace if necessary.<br>2. Turn the handle on the pressure relief valve to check for foreign objects inside. If the problem is not still solved, replace the pressure relief valve.<br>3. Check gas-side pressure in expansion vessel. Recharge to correct precharge pressure if necessary. If bladder perished replace expansion vessel with a new one with appropriate pre-charge.<br>4. Check gas-side pressure in DHW tank. If pressure in DHW tank is similar to that in incoming mains, cold water supply that merges with incoming mains water supply could flow back to DHW tank. Investigate source of back-feed and rectify error in pipework/fitting configuration. Adjust pressure in cold supply. |
| 19 | Noisy water circulation pump | Air in water circulation pump. | Use manual and automatic air vents to remove air from system.<br>Top up water if necessary to achieve 1 bar on primary circuit. |
| 20 | Noise during hot water draw off typically worse in the morning. | 1. Loose airing cupboard pipework.<br>2. Heaters switching on/off. | 1. Install extra pipe fastening clips.<br>2. Normal operation no action necessary. |
| 21 | Mechanical noise heard coming from the system. | 1. Heaters switching on/off.<br>2. 3-way valve changing position between DHW and heating mode. | Normal operation no action necessary. |
| 22 | Water circulation pump runs for a short time unexpectedly . | Water circulation pump jam prevention mechanism (routine) to inhibit the build-up of scale. | Normal operation no action necessary. |
| 23 | Milky/Cloudy water (Sanitary circuit) | Oxygenated water | Water from any pressurised system will release oxygen bubbles when water is running. The bubbles will settle out. |
| 24 | Heating mode has been on standby for a long time (does not start operation smoothly.) | The time of “Delay” set in “Economy settings for pump” is too short. (Go to “Service menu” → “Auxiliary settings” → “Economy settings for pump”) | Increase the time of “Delay” in “Economy settings for pump” . |
| 25 | The FTC unit that was running in the heating mode before power failure is running in the DHW mode after power recovery. | The FTC unit is designed to run in an operation mode with a higher priority (i.e. DHW mode in this case) at power recovery. | • Normal operation.<br>• After the DHW max. operation time has elapsed or the DHW max. temperature has been reached, the DHW mode switches to the other mode (ex. Heating mode). |
| 26 | Cooling mode is NOT available. | Dip SW2-4 is OFF. | Turn Dip SW2-4 to ON. (Refer to “5.1 Dip Switch Functions” in this manual.) |
| 27 | The cooling system does not cool down to the set temperature. | 1. When the water in the circulation circuit is unduly hot, Cooling mode starts with a delay for the protection of the outdoor unit.<br>2. When the outdoor temperature is lower than the preset temperature below which the freeze stat. function is activated, Cooling mode does not start running. | 1. Normal operation.<br>2. To run Cooling mode overriding the freeze stat. function, adjust the preset temperature below which the freeze stat. function is activated. (Refer to “<Freeze stat function>” on Page C-40. |
| 28 | The electric heaters are activated shortly after DHW or LP mode starts running after Cooling mode. | The setting time period of Heat-pump-only operation is short. | Adjust the setting time period of Heat-pump only operation. (Refer to Refer to “Electric heater (DHW)“ in the table of <Auxiliary settings> on Page C-21.) |
| 29 | During DHW or LP mode following the cooling mode, error L6 (circulation water freeze protection) occurs and operation stops frequently. | If the preset temperature below which the freeze stat. function is activated is low, error L6 is more likely to occur interruption operation before the freeze stat. function is activated. | Adjust the preset temperature below which the freeze stat. function is activated. (Refer to “<Freeze stat function>” on Page C-40.) |
| 30 | Heat pump is forced to turn ON and OFF. | Smart grid ready input (IN11 and IN12) is used, and switch-on and off commands are input. | Normal operation no action necessary. |

## 9.1 Wiring for multiple outdoor units control

To establish a larger system, up to 6 outdoor units of the same model can be connected in one system.

**Note:**

- **SUZ-SWM outdoor unit can not be connected.**
- **Split type outdoor unit using R32 refrigerant can not be connected.**
- **PUZ-(H)WM outdoor unit can not be connected to PAC-SIF051B-E.**
- **Flow sensor is necessary for PUZ-(H)WM outdoor unit.**
- **PUZ-(H)WM outdoor unit DIP switch settings changed to SW5-5 ON.**

### 9.1.1 Requirements

<Outdoor unit>
(a) Up to 6 units can be connected.
(b) All the outdoor units must be of the same model.
(c) The outdoor units must be connected to sub units.

<FTC: Main unit>
Each sub unit is controlled by the main unit.
(a) The outdoor units must NOT be connected to the main unit.
Make sure that the main unit is powered by independent source.
(b) Wire the main remote controller to TBI.6 1-2 on the main unit.
(c) Wire the electric heater to the main unit.

<FTC: Sub unit>
The hydrobox or PAC-SIF051B-E or main unit is used as a sub unit
(a) Connect each outdoor unit to a sub unit.
(b) The main remote controller must NOT be wired to a sub unit.

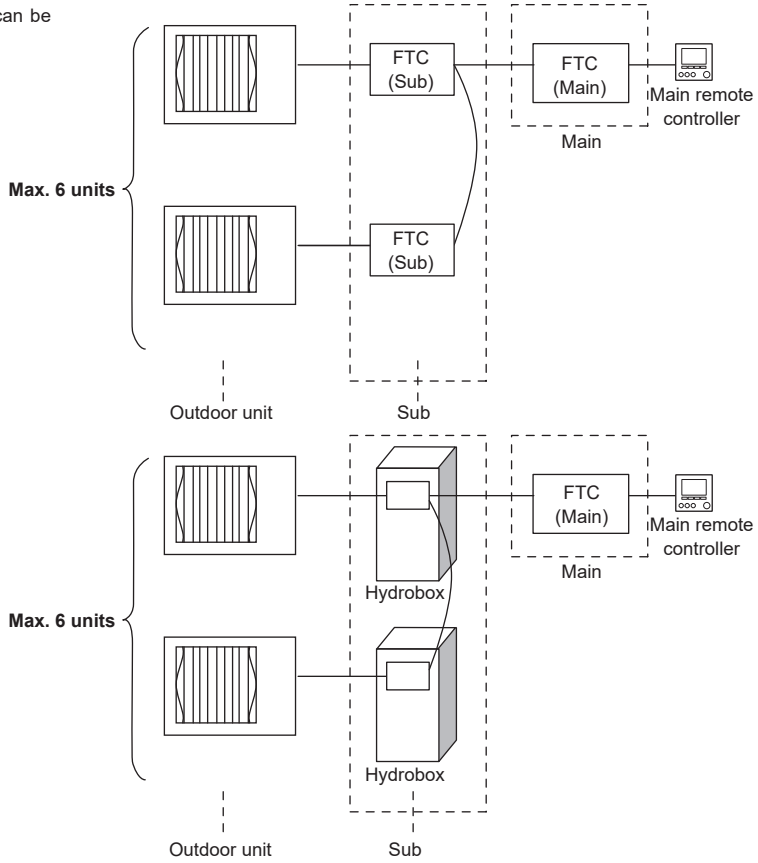


## 9.2 Pipe work

Following is the system example of two outdoor units being connected in one system.

**IMPORTANT NOTE**
**Keep the minimum amount of water required in the space heating circuit according to the number of outdoor units.**

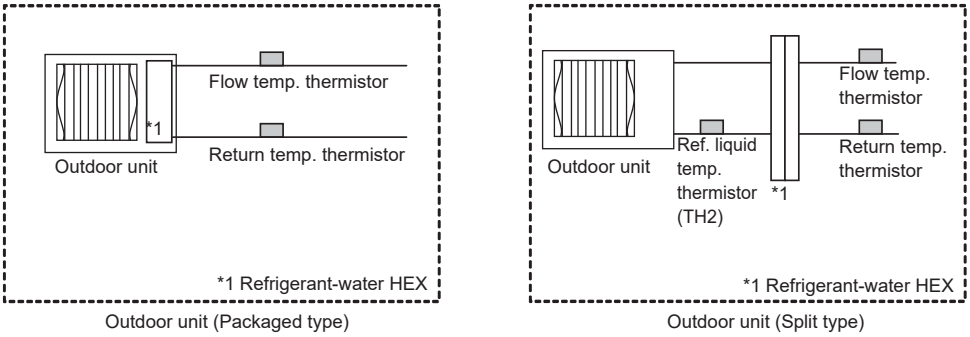


**<Fig. 9.2.1>**

**System 1: Heating/Cooling system**

- Install a low loss header (local supply).
- Install booster heater toward the local system, relative to the low loss header.

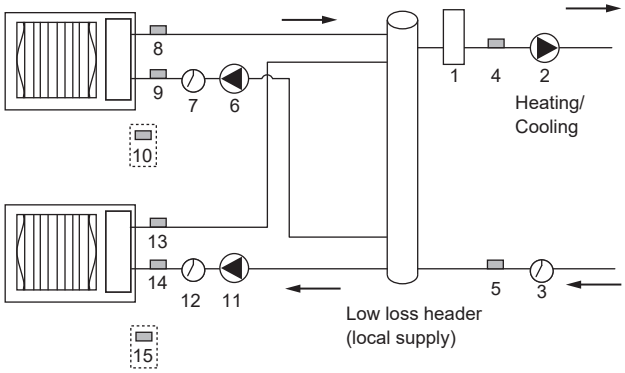


**<Fig. 9.2.2>**

| No. | Component | Wiring | | |
|---|---|---|---|---|
| | | Main | Sub 1 | Sub 2 |
| 1 | Booster heater (local supply) | ✔ | | |
| 2 | Circulation pump1 (local supply) | ✔ | | |
| 3 | Flow switch1 (local supply) *2 | ✔ | | |
| 4 | Flow temp. thermistor (THW1) | ✔ | | |
| 5 | Return temp. thermistor (THW2) | ✔ | | |
| 6 | Sub1 circulation pump1 (local supply) | | ✔ | |
| 7 | Sub1 flow switch (local supply) *2 | | ✔ | |
| 8 | Sub1 flow temp. thermistor (THW1) | | ✔ | |
| 9 | Sub1 return temp. thermistor (THW2) | | ✔ | |
| 10 | Sub1 ref. liquid temp. thermistor (TH2) *1 | | ✔ | |
| 11 | Sub2 circulation pump1 (local supply) | | | ✔ |
| 12 | Sub2 flow switch (local supply) *2 | | | ✔ |
| 13 | Sub2 flow temp. thermistor (THW1) | | | ✔ |
| 14 | Sub2 return temp. hermistor (THW2) | | | ✔ |
| 15 | Sub2 ref. liquid temp. thermistor (TH2) *1 | | | ✔ |

*1 When the outdoor unit is split type, TH2 needs to be installed. <Fig. 9.2.1>
*2 For safety protection, it is recommended to install a flow switch.

**System 2: Heating/Cooling & DHW system**

- Install DHW tank toward the outdoor unit , relative to the low loss header.
- Wire 3-way valve or 2-way valve 1, 2 to FTC (sub unit).
- LP mode uses assistance of electric heater. Place an immersion heater on the DHW circuit.
- Install a low loss header (local supply).
- Install booster heater toward the local system, relative to the low loss header.

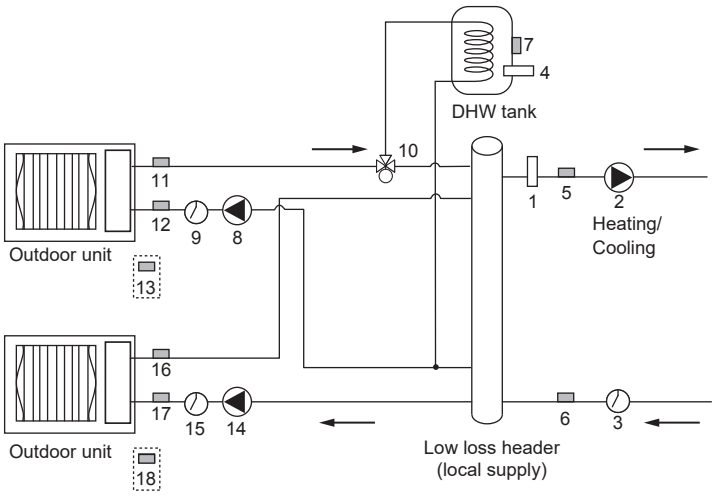


**<Fig. 9.2.3>**

| No. | Component | Wiring | | |
|---|---|---|---|---|
| | | Main | Sub 1 *4 | Sub 2 |
| 1 | Booster heater (local supply) | ✔ | | |
| 2 | Circulation pump1 (local supply) | ✔ | | |
| 3 | Flow switch1 (local supply) *2 | ✔ | | |
| 4 | Immersion heater (local supply) | ✔ | | |
| 5 | Flow temp. thermistor (THW1) | ✔ | | |
| 6 | Return temp. thermistor (THW2) | ✔ | | |
| 7 | Tank water temp. (THW5B) | ✔ | | |
| 8 | Sub1 circulation pump1 (field supply) | | ✔ | |
| 9 | Sub1 flow switch (local supply) *2 | | ✔ | |
| 10 | Sub1 3-way valve (local supply) *3 | | ✔ | |
| 11 | Sub1 flow temp. thermistor (THW1) | | ✔ | |
| 12 | Sub1 return temp. thermistor (THW2) | | ✔ | |
| 13 | Sub1 ref. liquid temp. thermistor (TH2) *1 | | ✔ | |
| 14 | Sub2 circulation pump1 (local supply) | | | ✔ |
| 15 | Sub2 flow switch (local supply) *2 | | | ✔ |
| 16 | Sub2 flow temp. thermistor (THW1) | | | ✔ |
| 17 | Sub2 return temp. thermistor (THW2) | | | ✔ |
| 18 | Sub2 ref. liquid temp. thermistor (TH2) *1 | | | ✔ |

*1 When the outdoor unit is split type, TH2 needs to be installed. <Fig. 9.2.1>
*2 For safety protection, it is recommended to install a flow switch.
*3 The use of two 2-way valves can perform the same function as a 3-way valve.
*4 DHW operation requires to use the main unit (or hydro box) as the sub controller.

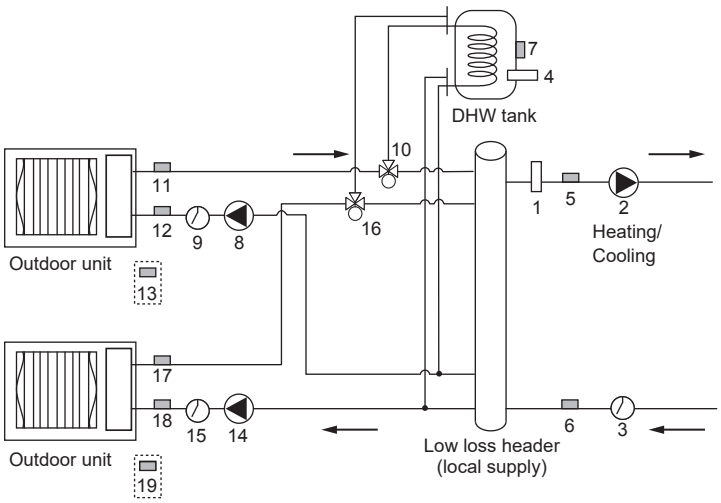


**<Fig. 9.2.4>**

| No. | Component | Wiring | | |
|---|---|---|---|---|
| | | Main | Sub 1 *4 | Sub 2 *4 |
| 1 | Booster heater (local supply) | ✔ | | |
| 2 | Circulation pump1 (local supply) | ✔ | | |
| 3 | Flow switch1 (local supply) *2 | ✔ | | |
| 4 | Immersion heater (local supply) | ✔ | | |
| 5 | Flow temp. thermistor (THW1) | ✔ | | |
| 6 | Return temp. thermistor (THW2) | ✔ | | |
| 7 | Tank water temp. (THW5B) | ✔ | | |
| 8 | Sub1 circulation pump1 (local supply) | | ✔ | |
| 9 | Sub1 flow switch (local supply) *2 | | ✔ | |
| 10 | Sub1 3-way valve (local supply) *3 | | ✔ | |
| 11 | Sub1 flow temp. thermistor (THW1) | | ✔ | |
| 12 | Sub1 return temp. thermistor (THW2) | | ✔ | |
| 13 | Sub1 ref. liquid temp. thermistor (TH2) *1 | | ✔ | |
| 14 | Sub2 circulation pump1 (local supply) | | | ✔ |
| 15 | Sub2 flow switch (local supply) *2 | | | ✔ |
| 16 | Sub2 3-way valve (local supply) *3 | | | ✔ |
| 17 | Sub2 flow temp. thermistor (THW1) | | | ✔ |
| 18 | Sub2 return temp. thermistor (THW2) | | | ✔ |
| 19 | Sub2 ref. liquid temp. thermistor (TH2) *1 | | | ✔ |

*1 When the outdoor unit is split type, TH2 needs to be installed. <Fig. 9.2.1>
*2 For safety protection, it is recommended to install a flow switch.
*3 The use of two 2-way valves can perform the same function as a 3-way valve.
*4 DHW operation requires to use the main unit (or hydro box) as the sub controller.

**System 3: 2-zone temperature control**

- Install a mixing tank (local supply) for 2-zone temperature control.
- Install a low loss header (local supply).
- Install booster heater toward the local system, relative to the low loss header.
- For details on 2-zone installation, refer to ”2-zone temperature control’ in “3.5 Local system”.

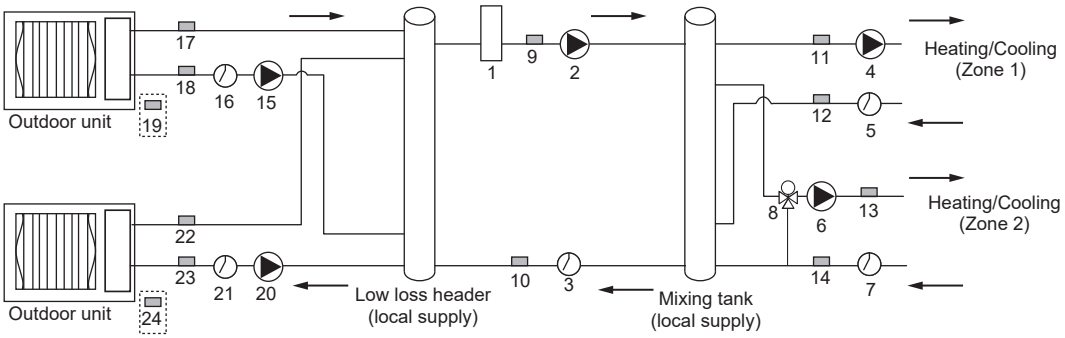


**<Fig. 9.2.5>**

| No. | Component | Wiring | | |
|---|---|---|---|---|
| | | Main | Sub 1 | Sub 2 |
| 1 | Booster heater (local supply) | ✔ | | |
| 2 | Circulation pump1 (local supply) | ✔ | | |
| 3 | Flow switch1 (local supply) *2 | ✔ | | |
| 4 | Circulation pump2 (local supply) | ✔ | | |
| 5 | Flow switch2 (local supply) *2 | ✔ | | |
| 6 | Circulation pump3 (local supply) | ✔ | | |
| 7 | Flow switch3 (local supply) *2 | ✔ | | |
| 8 | Motorized mixing valve (local supply) | ✔ | | |
| 9 | Flow temp. thermistor (THW1) | ✔ | | |
| 10 | Return temp. thermistor (THW2) | ✔ | | |
| 11 | Zone1 flow temp. thermistor (THW6) (option) | ✔ | | |
| 12 | Zone1 return temp. thermistor (THW7) (option) | ✔ | | |

| No. | Component | Wiring | | |
|---|---|---|---|---|
| | | Main | Sub 1 | Sub 2 |
| 13 | Zone2 flow temp. thermistor (THW8) (option) | ✔ | | |
| 14 | Zone2 return temp. thermistor (THW9) (option) | ✔ | | |
| 15 | Sub1 circulation pump1 (local supply) | | ✔ | |
| 16 | Sub1 flow switch (local supply) *2 | | ✔ | |
| 17 | Sub1 flow temp. thermistor (THW1) | | ✔ | |
| 18 | Sub1 return temp. thermistor (THW2) | | ✔ | |
| 19 | Sub1 ref. liquid temp. thermistor (TH2) *1 | | ✔ | |
| 20 | Sub2 circulation pump1 (local supply) | | | ✔ |
| 21 | Sub2 flow switch (local supply) *2 | | | ✔ |
| 22 | Sub2 flow temp. thermistor (THW1) | | | ✔ |
| 23 | Sub2 return temp. thermistor (THW2) | | | ✔ |
| 24 | Sub2 ref. liquid temp. thermistor (TH2) *1 | | | ✔ |

*1 When the outdoor unit is split type, TH2 needs to be installed. <Fig. 9.2.1>
*2 For safety protection, it is recommended to install a flow switch.

**System 4: Heating/Cooling system (with Boiler)**
- Install a mixing tank (local supply) for connection of the boiler.
- Install a low loss header (local supply).
- Install booster heater between low loss header and mixing tank.
- For more details, refer to the installation manual of PAC-TH012HT-E.

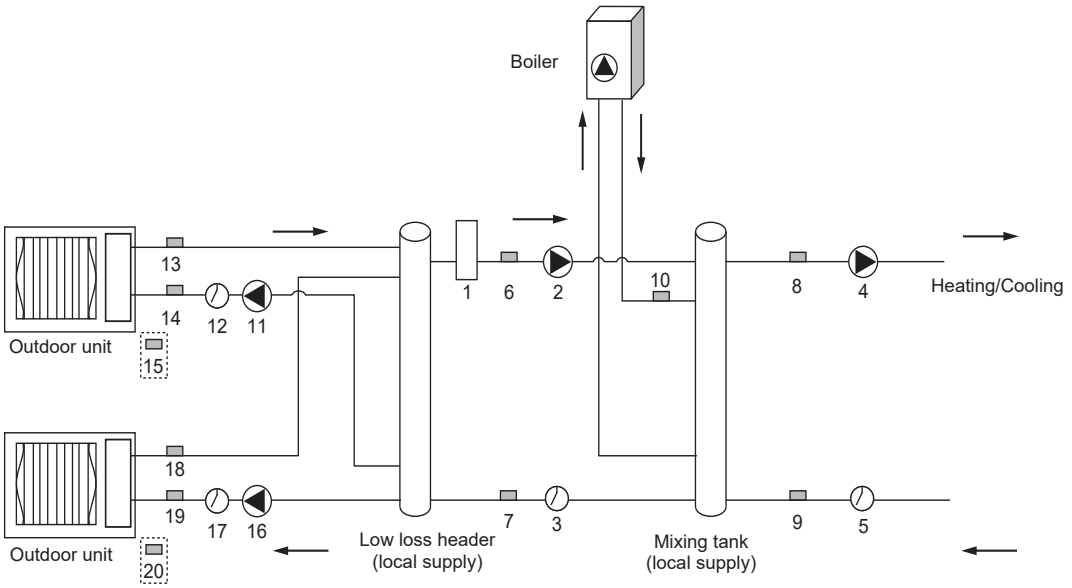


**<Fig. 9.2.6>**

| No. | Component | Wiring | | |
|---|---|---|---|---|
| | | Main | Sub 1 | Sub 2 |
| 1 | Booster heater (local supply) | ✔ | | |
| 2 | Circulation pump1 (local supply) | ✔ | | |
| 3 | Flow switch1 (local supply) *2 | ✔ | | |
| 4 | Circulation pump2 (local supply) | ✔ | | |
| 5 | Flow switch2 (local supply) *2 | ✔ | | |
| 6 | Flow temp. thermistor (THW1) | ✔ | | |
| 7 | Return temp. thermistor (THW2) | ✔ | | |
| 8 | Flow temp. thermistor (THW6) (option) | ✔ | | |
| 9 | Return temp. thermistor (THW7) (option) | ✔ | | |
| 10 | Boiler flow temp. thermistor (THWB1) (option) | ✔ | | |

| No. | Component | Wiring | | |
|---|---|---|---|---|
| | | Main | Sub 1 | Sub 2 |
| 11 | Sub1 circulation pump1 (local supply) | | ✔ | |
| 12 | Sub1 flow switch (local supply) *2 | | ✔ | |
| 13 | Sub1 flow temp. thermistor (THW1) | | ✔ | |
| 14 | Sub1 return temp. thermistor (THW2) | | ✔ | |
| 15 | Sub1 ref. liquid temp. thermistor (TH2) *1 | | ✔ | |
| 16 | Sub2 circulation pump1 (local supply) | | | ✔ |
| 17 | Sub2 flow switch (local supply) *2 | | | ✔ |
| 18 | Sub2 flow temp. thermistor (THW1) | | | ✔ |
| 19 | Sub2 return temp. thermistor (THW2) | | | ✔ |
| 20 | Sub2 ref. liquid temp. thermistor (TH2) *1 | | | ✔ |

*1 When the outdoor unit is split type, TH2 needs to be installed. <Fig. 9.2.1>
*2 For safety protection, it is recommended to install a flow switch.

**System 5: Heating/Cooling system (with Hydrobox)*1**
- Install a low loss header (local supply).
- Install booster heater toward the local system, relative to the low loss header.

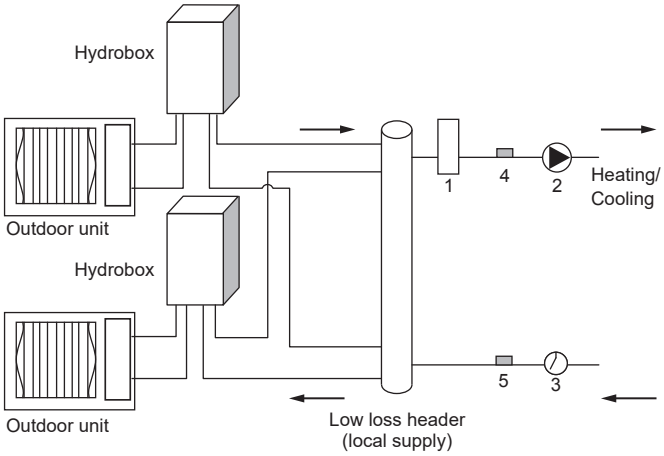


**<Fig. 9.2.7>**

| No. | Component | Wiring | | |
|---|---|---|---|---|
| | | Main | Sub 1 (Hydrobox) | Sub 2 (Hydrobox) |
| 1 | Booster heater(local supply) | ✔ | | |
| 2 | Circulation pump1 (local supply) | ✔ | | |
| 3 | Flow switch1 (local supply) *2 | ✔ | | |
| 4 | Flow temp. thermistor (THW1) | ✔ | | |
| 5 | Return temp. thermistor (THW2) | ✔ | | |

*1 Cooling system is available only with ERS models.
*2 For safety protection, it is recommended to install a flow switch.

## 9.3 Electrical connection

All electrical work should be carried out by a suitably qualified technician. Failure to comply with this could lead to electrocution, fire, and death. It will also invalidate product warranty. All wiring should be according to national wiring regulations.

### 9.3.1 Main unit

**■ FTC (Main)**

Outdoor unit must NOT be connected to FTC (Main) unit.

**FTC (Main) unit electrical box connector connections changed. (see Fig. 9.3.2.)**

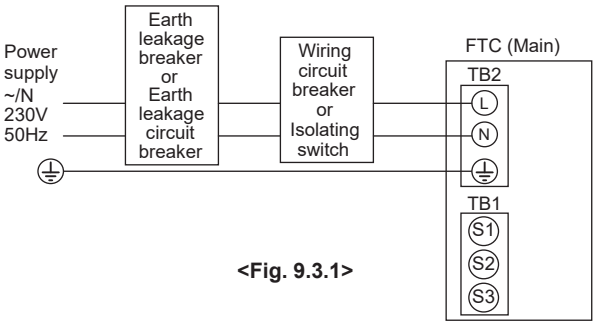


<Fig. 9.3.1>

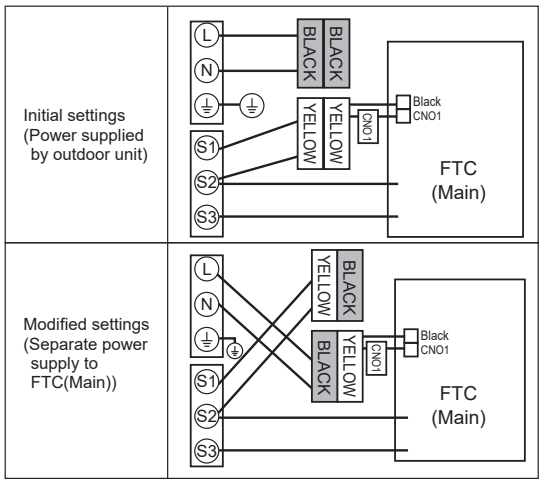


<Fig. 9.3.2>

### 9.3.2 Sub unit

Connect each outdoor unit to a sub unit.
FTC (Sub) can be powered in two ways.
1. Power cable is run from the outdoor unit to a sub unit.
2. FTC (Sub) has independent power source.

**■ FTC (Main) (PAC-IF07*B-E) used as sub**

• For wiring as a sub controller, refer to "4.1 Electrical connection". *1

*1 Do not connect the power cable to the booster heater because it does not work in sub controller setting.

**■ FTC (Sub) (PAC-SIF051B-E) <Fig. 9.3.3>**

FTC (Sub) can be powered in two ways.
1. Power cable is run from the outdoor unit to FTC (sub).
2. FTC (Sub) has independent power source.

**Note:**

- **Do not run the low voltage cables through a slot that the high voltage cables go through.**
- **Bundle cables by using clamps as shown in the figure to the right .**

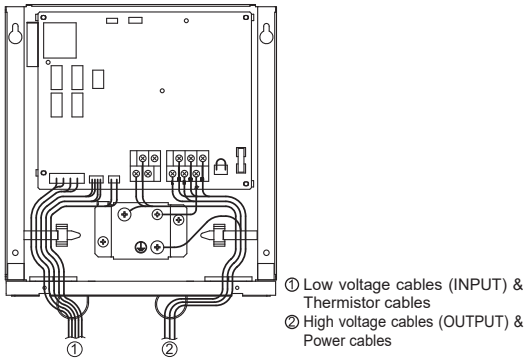


<Fig. 9.3.3>

**Option 1: FTC (Sub) powered via outdoor unit**

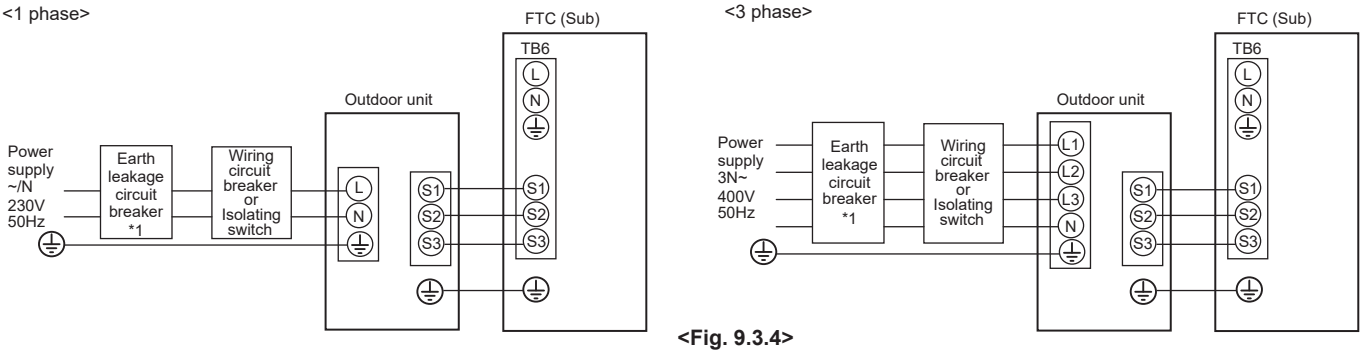


<Fig. 9.3.4>

*1. If the installed earth leakage circuit breaker does not have an over-current protection function, install a breaker with that function along the same power line. A breaker with at least 3.0 mm contact separation in each pole shall be provided. Use earth leakage breaker (NV). The breaker shall be provided to ensure disconnection of all active phase conductors of the supply.

**Note: In accordance with IEE regulations the circuit breaker/isolating switch located on the outdoor unit should be installed with lockable devices (health and safety).**

| | | | |
|---|---|---|---|
| Wiring Wiring No. × size (mm²) | FTC (Sub) - Outdoor unit | *2 | 3 × 1.5 (polar) |
| | FTC (Sub) - Outdoor unit earth | *2 | 1 × Min. 1.5 |
| Circuit rating | FTC (Sub) - Outdoor unit S1 - S2 | *3 | 230 V AC |
| | FTC (Sub) - Outdoor unit S2 - S3 | *3 | 24 V DC |

*2. Max. 45 m
If 2.5 mm² used, Max. 50 m
If 2.5 mm² used and S3 separated, Max. 80 m

*3. The values given in the table above are not always measured against the ground value.

**Notes:**
1. **Wiring size must comply with the applicable local and national codes.**
2. **FTC (Sub)/outdoor unit connecting cords shall not be lighter than polychloroprene sheathed flexible cord. (Design 60245 IEC 57)**
   **FTC (Sub) power supply cords shall not be lighter than polychloroprene sheathed flexible cord. (Design 60227 IEC 53)**
3. **Install an earth longer than other cables.**

**Option 2: FTC (Sub) powered by independent source**

If FTC (Sub) and outdoor units have separate power supplies, the following requirements MUST be carried out:

- Remove the short-circuited connector (CNS2) on FTC (Sub). (see <Fig. 9.3.5>)
- Turn the outdoor unit DIP switch SW8-3 to ON.
- Turn on the outdoor unit BEFORE the FTC (Sub).

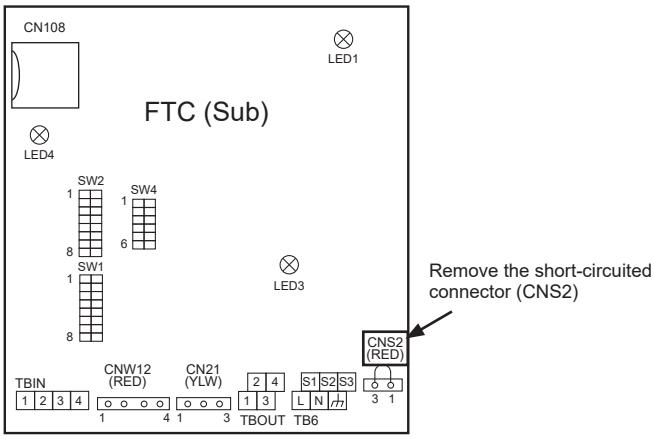


**<Fig. 9.3.5>**

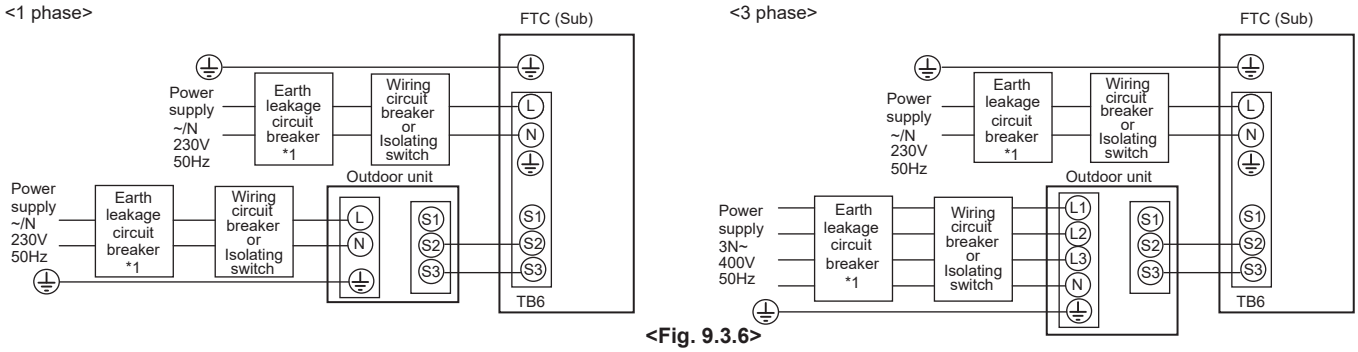


**<Fig. 9.3.6>**

*1 If the installed earth leakage circuit breaker does not have an over-current protection function, install a breaker with that function along the same power line.

| | | | |
|---|---|---|---|
| FTC (Sub) power supply | | | ~/N 230 V 50 Hz |
| FTC (Sub) input capacity Main switch (Breaker) | | *1 | 16 A |
| Wiring Wiring No. × size (mm²) | FTC (Sub) power supply | | 2 × Min. 1.5 |
| | FTC (Sub) power supply earth | | 1 × Min. 1.5 |
| | FTC (Sub) - Outdoor unit | *2 | 2 × Min. 0.3 |
| | FTC (Sub) - Outdoor unit earth | | — |
| Circuit rating | FTC (Sub) L - N | *3 | 230 V AC |
| | FTC (Sub) - Outdoor unit S1 - S2 | *3 | — |
| | FTC (Sub) - Outdoor unit S2 - S3 | *3 | 24 V DC |

*1. A breaker with at least 3.0 mm contact separation in each pole shall be provided. Use earth leakage breaker (NV). The breaker shall be provided to ensure disconnection of all active phase conductors of the supply.
*2. Max. 45 m
If 2.5 mm² used, Max. 50 m
If 2.5 mm² used and S3 separated, Max. 80 m
*3. The values given in the table above are not always measured against the ground value.

**Notes: 1. Wiring size must comply with the applicable local and national codes.**
**2. FTC (Sub)/outdoor unit connecting cords shall not be lighter than polychloroprene sheathed flexible cord. (Design 60245 IEC 57)**
**FTC (Sub) power supply cords shall not be lighter than polychloroprene sheathed flexible cord. (Design 60227 IEC 53)**
**3. Install an earth longer than other cables.**

### Hydrobox

- For wiring as a sub controller (hydrobox) , refer to "4.4 Electrical Connection" in Hydrobox installation manual.

**Notes: 1. Do not connect the power cable to the booster heater because it doesn't work in sub controller setting.**
**2. Do not connect the main remote controller cable.**

<Before system set up>
Insert the included SD memory card into the FTC control board. (Refer to section 4.11.)

## 9.4 Main remote controller wiring

(a) Wire the main remote controller to TBI.6 RC terminals on the main unit. The main remote controller must NOT be connected to a sub unit.
(b) Use the daisy chain wiring method to wire the main unit and sub units by connecting TBI.6 RC terminals. *1
*1 The maximum length between each units wiring is 10 m. The maximum length of total daisy-chain wiring is 500 m.

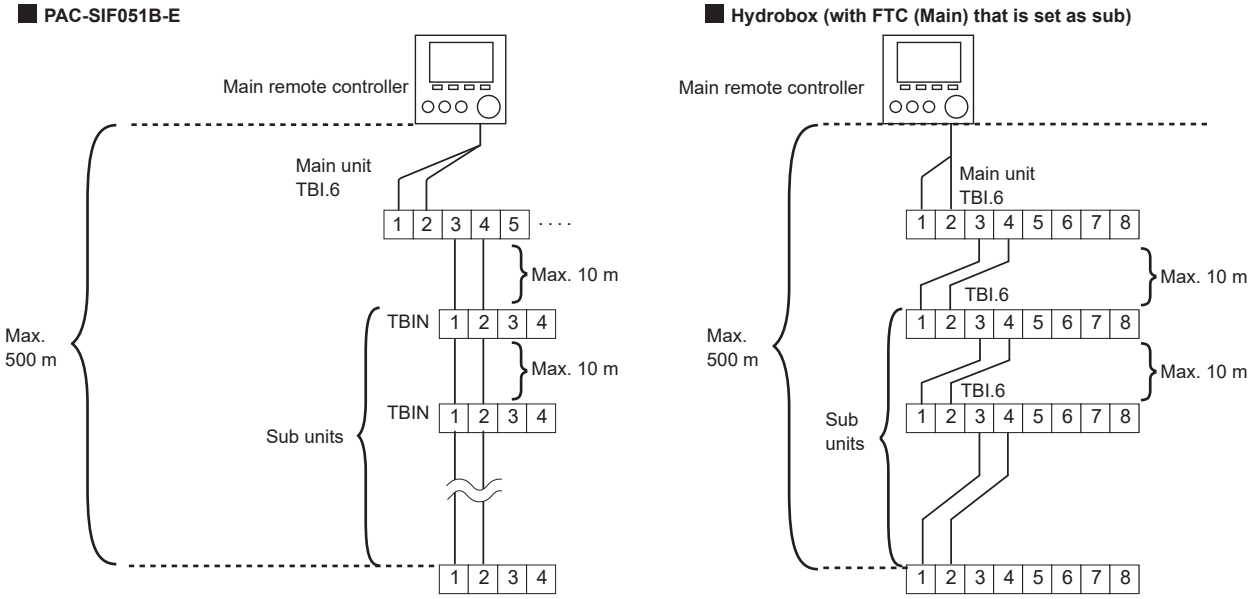


**<Fig. 9.4.1>**

**Note: Wiring for main remote controller cable and daisy chain cable shall be (5 cm or more) apart from power source wiring so that it is not influenced by electrical noise from power source wiring. (Do NOT insert main remote controller cable and power source wiring in the same conduit.)**

## 9.5. Connecting the thermistor cables

Connect the thermistor for the FTC (Sub) controller.

### 9.5.1. Connecting the refrigerant pipe temp. thermistor (TH2) cable

Connect the TH2 cable to the CN21 connector on FTC (Sub).
For split Outdoor unit : Connect TH2.
For packaged Outdoor unit : It is NOT necessary to connect TH2.

When the TH2 cable is too long, bundle the excess cable outside the FTC (Sub) unit.
Do not bind the wires in the FTC (Sub) unit.

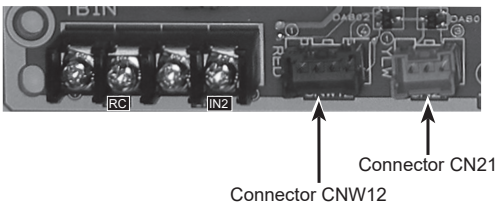


**<Fig. 9.5.1>**

<Thermistor position>
Place TH2 on **refrigerant** piping (**liquid** side).
It is recommended to protect the thermistor with heat insulating materials so as not to be affected by ambient temperature.
Note: Be sure to place TH2 where it correctly detects refrigerant piping temp. (liquid side).
Because;
(1) TH2 is required to detect heating subcool correctly.
(2) Refrigerant temperature of water-to-refrigerant heat exchanger also needs to be detected for protection purpose.

### 9.5.2. Connecting the flow water temp. thermistor (THW1) cable and the return water temp. thermistor (THW2) cable

The THW1 and the THW2 cables share a connector, and the connector connects to CNW12 connector on FTC (Sub).

When the THW1 and THW2 cables are too long, bundle the excess cables outside the FTC (Sub) unit. Do not bind the wires in the FTC (Sub) unit.

<Thermistor position>
Place THW1 on **water** piping (water **outlet** side) after booster heater, and THW2 on the water inlet side.
It is recommended to protect the thermistor with heat insulating materials so as not to be affected by ambient temperature.
Note: Be sure to attach THW1 where it correctly detects Flow temp. (water outlet side). Fore more details, see Page C-6.

⚠ **Caution:**
**Do not route the thermistor cables together with power cables.**
**The sensor part of the thermistor should be installed where user can not access.**

## 9.6 Dip switch functions

**<Outdoor unit>**
• Set refrigerant address on each outdoor unit from 1 to 6.

**Note: Do NOT use refrigerant address 0 as 0 is used for FTC (Main). The address range is from 1 to 6.**

**Split model (SW1-3 to SW1-6)**

| Dip switch | Refrigerant address number | | | | | |
|---|---|---|---|---|---|---|
| | Add. 1 | Add. 2 | Add. 3 | Add. 4 | Add. 5 | Add. 6 |
| SW1-1 | — | — | — | — | — | — |
| SW1-2 | — | — | — | — | — | — |
| SW1-3 | ON | OFF | ON | OFF | ON | OFF |
| SW1-4 | OFF | ON | ON | OFF | OFF | ON |
| SW1-5 | OFF | OFF | OFF | ON | ON | ON |
| SW1-6 | OFF | OFF | OFF | OFF | OFF | OFF |

**Packaged model**

Refer to outdoor unit installation manual.

**<FTC: Main>**
- Set Dip SW4-1 and SW4-2 to ON.
- For more details refer to “5. Dip Switch setting.”

**<FTC: Sub>**
- Set Dip SW4-1 to ON "Active :multiple outdoor unit control".
- Set Dip SW1-7 (Outdoor unit type) on each sub unit according to each connected outdoor unit type.
- Set only Dip-SW1-3 to ON on the sub unit that runs DHW operation.

| Dip switch | | Function | OFF | ON | Main | Sub (PAC-SIF051B-E) | Sub *1 (Hydrobox) |
|---|---|---|---|---|---|---|---|
| SW1 | SW1-1 | Bolier | WITHOUT Bolier | WITH Bolier | ✔ | — | — |
| | SW1-2 | Heat pump maximum outlet water temperature | 55˚C | 60˚C | ✔ | ✔ | ✔ |
| | SW1-3 | DHW tank | WITHOUT DHW tank | WITH DHW tank | ✔ | ✔ | ✔ |
| | SW1-4 | Immersion heater | WITHOUT Immersion heater | WITH Immersion heater | ✔ | — | — |
| | SW1-5 | Booster heater | WITHOUT Booster heater | WITH Booster heater | ✔ | — | — |
| | SW1-6 | Booster heater function | For heating only | For heating and DHW | — | — | — |
| | SW1-7 | Outdoor unit type | Split type | Packaged type | — | ✔ | ✔ |
| | SW1-8 | Wireless remote controller | WITHOUT Wireless remote controller | WITH Wireless remote controller | ✔ | — | — |
| SW2 | SW2-1 | Room thermostat 1 input (IN1) logic change | Zone1 operation stop at short | Zone1 operation stop at open | ✔ | — | — |
| | SW2-2 | Flow switch 1 input (IN2) logic change | Failure detection at short | Failure detection at open | ✔ | ✔ | ✔ |
| | SW2-3 | Booster heater capacity restriction | Inactive | Active | ✔ | — | — |
| | SW2-4 | Cooling mode function | Inactive | Active | ✔ | — | — |
| | SW2-5 | "Automatic switch to backup heater only operation (When outdoor unit stops by error)" | Inactive | Active | ✔ | — | — |
| | SW2-6 | Mixing tank | WITHOUT Mixing tank | WITH Mixing tank | ✔*2 | — | — |
| | SW2-7 | 2-zone temperature control | Inactive | Active | ✔ | — | — |
| | SW2-8 | Flow sensor | WITHOUT Flow sensor | WITH Flow sensor | ✔ | — | ✔ |
| SW3 | SW3-1 | Room thermostat 2 input (IN6) logic change | Zone2 operation stop at short | Zone2 operation stop at open | ✔ | | — |
| | SW3-2 | Flow switch 2 and 3 input logic change | Failure detection at short | Abnormality detection at open | ✔ | | — |
| | SW3-3 | — | — | — | — | | — |
| | SW3-4 | — | — | — | — | | — |
| | SW3-5 | Heating mode function | Inactive | Active | ✔ | | — |
| | SW3-6 | 2-zone valve ON/OFF control | Inactive | Active | ✔ | | — |
| | SW3-7 | — | — | — | — | | — |
| | SW3-8 | — | — | — | — | | — |
| SW4 | SW4-1 | Multiple unit control | Inactive | Active | ON | ON | ON |
| | SW4-2 | Position of multiple outdoor units control | Sub | Main | ON | OFF | OFF |
| | SW4-3 | — | — | — | — | — | — |
| | SW4-4 | — | — | — | — | — | — |
| | SW4-5 | Emergency mode (Heater only operation) | Normal | "Emergency mode (Heater only operation) (To be activated only when powered ON)" | ✔ | — | — |
| | SW4-6 | Emergency mode (Bolier operation) | Normal | "Emergency mode (Bolier operation) (To be activated only when powered ON)" | ✔ | — | — |
| SW5 | SW5-1 | — | — | — | — | | — |
| | SW5-2 | Advanced auto adaptation | Inactive | Active | ✔ | | — |
| | SW5-3 | — | — | — | — | | — |
| | SW5-4 | — | — | — | — | | — |
| | SW5-5 | — | — | — | — | | — |
| | SW5-6 | — | — | — | — | | — |
| | SW5-7 | — | — | — | — | | — |
| | SW5-8 | — | — | — | — | | — |
| SW6 | SW6-1 | — | — | — | — | | — |
| | SW6-2 | — | — | — | — | | — |
| | SW6-3 | Pressure sensor | Inactive | Active | — | | ✔ |
| | SW6-4 | Analog output signal (0-10 V) | Inactive | Active | ✔ | | — |
| | SW6-5 | — | — | — | — | | — |

*1 When FTC (Main) in Hydrobox is set as Sub.
*2 Set Dip SW2-6 to ON in "System 3 (2 zone)" and in "System 4 (with Boiler)" mentioned in "9.2 Pipe work."

✔ : Setting is required
— : NO setting (function is not available)

## 9.7 Connecting inputs/outputs

**<Electrical connection for main controller>**

• Refer to "4.5 Connecting inputs/outputs"

**<Electrical connection for sub controller>**

■ **PAC-IF07*B-E**

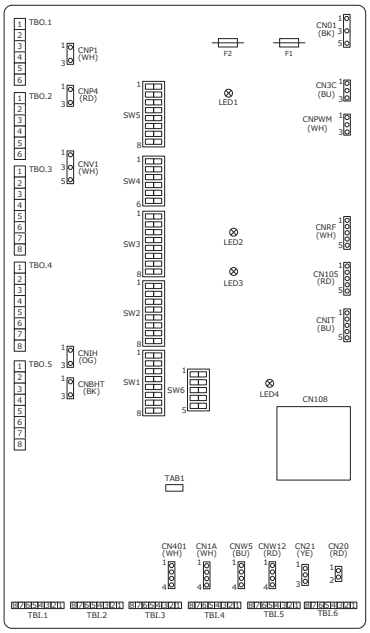


**<Fig. 9.7.1>**

**Signal inputs**

| Name | Terminal block | Connector | Item | OFF (Open) | OFF (Short) |
|---|---|---|---|---|---|
| RC | TBI.6 1-4 | — | Communication cable between indoor units | — | — |
| IN2 | TBI.1 5-6 | — | Flow switch 1 input | Refer to SW2-2 in <9.6 Dip Switch Functions>. | |

**Wiring specification and local supply parts**

| Item | Name | Model and specifications |
|---|---|---|
| Signal input function | Signal input wire | Use sheathed vinyl coated cord or cable.<br>Max. 10 m<br>Wire type: CV, CVS or equivalent<br>Wire size: Stranded wire 0.13 mm² to 1.25 mm²<br>Solid wire: ø0.4 mm to ø1.2 mm |
| | Switch | Non-voltage “a” contact signals<br>Remote switch: minimum applicable load 12V DC, 1mA |

**Thermistor inputs**

| Name | Terminal block | Connector | Item | Optional part model |
|---|---|---|---|---|
| TH2 | — | CN21 | Thermistor (Ref. liquid temp.) | — |
| THW1 | — | CNW12 1-2 | Thermistor (Flow water temp.) | — |
| THW2 | — | CNW12 3-4 | Thermistor (Return water temp.) | — |

**Note:**

**Do not splice the wiring to extend or shorten it, or this could affect correct monitoring of each temperature.**
**If the wiring is too long, bundle it with a strap to adjust the length.**

**Outputs**

| Name | Terminal block | Connector | Item | OFF | ON | Signal/Max. current |
|---|---|---|---|---|---|---|
| OUT1 | TBO.1 1-2 | CNP1 | Water circulation pump 1 output | OFF | ON | 230V AC 1.0 A Max. |
| OUT4 | TBO.2 4-6 | CNV1 | 3-way valve (2-way valve 1) output | Heating | DHW | 230V AC 0.1 A Max. |
| OUT13 | TBO.4 3-4 | — | 2-way valve 2 output | DHW | Heating | 230V AC 0.1 A Max. |

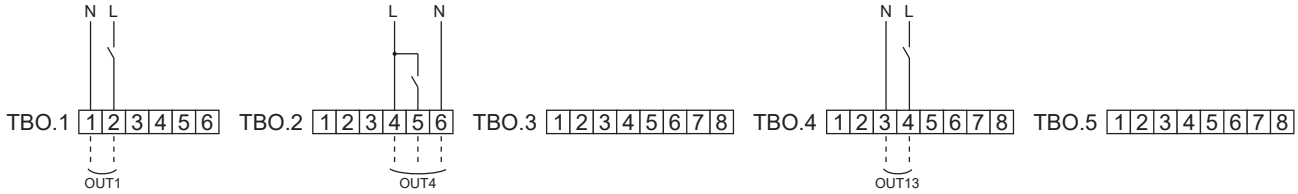


**<Fig. 9.7.2>**

**Wiring specification and local supply parts**

| Item | Name | Model and specifications |
|---|---|---|
| External output function | Outputs wire | Use sheathed vinyl coated cord or cable.<br>Max. 30 m<br>Wire type: CV, CVS or equivalent<br>Wire size: Stranded wire 0.25 mm² to 1.5 mm²<br>Solid wire: 0.25 mm² to 1.5 mm² |

**How to use TBO.1 to 5**

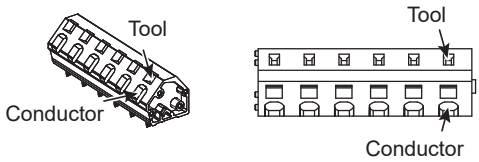


**Outline view** **Top view**

**Connect them using either way as shown above.**

**<Fig. 9.7.3>**

**Note:**

**1. Do not connect multiple water circulation pumps directly to each output (OUT1). In such a case, connect them via (a) relay(s).**
**2. Stranded wire should be processed with insulation-covered bar terminal (DIN46228-4 standard compatible type).**

■ **PAC-SIF051B-E**

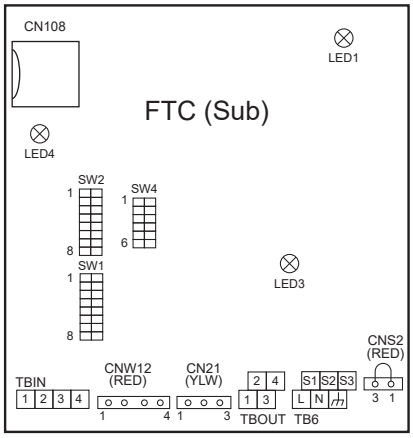


**<Fig. 9.7.4>**

**Signal inputs**

| Name | Terminal block | Connector | Item | OFF (Open) | OFF (Short) |
|---|---|---|---|---|---|
| RC | TBIN 1-2 | — | Communication cable between indoor units | — | — |
| IN2 | TBIN 3-4 | — | Flow switch input | Refer to SW2-2 in <9.6 Dip Switch Functions>. | |

**Wiring specification and local supply parts**

| Item | Name | Model and specifications |
|---|---|---|
| Signal input function | Signal input wire | Use sheathed vinyl coated cord or cable.<br>Max. 10 m<br>Wire type: CV, CVS or equivalent<br>Wire size: Stranded wire 0.5 mm² to 1.25 mm²<br>Solid wire: ø0.65 mm to ø1.2 mm |
| | Switch | Non-voltage “a” contact signals<br>Remote switch: minimum applicable load 12 V DC, 1 mA |

**Thermistor inputs**

| Name | Terminal block | Connector | Item | Optional part model |
|---|---|---|---|---|
| TH2 | — | CN21 | Thermistor (Ref. liquid temp.) | — |
| THW1 | — | CNW12 1-2 | Thermistor (Flow water temp.) | — |
| THW2 | — | CNW12 3-4 | Thermistor (Return water temp.) | — |

**Note:**
**Do not splice the wiring to extend or shorten it, or this could affect correct monitoring of each temperature.**
**If the wiring is too long, bundle it with a strap to adjust the length.**

**Output**

| Name | Terminal block | Connector | Item | OFF | ON | Signal/Max. current |
|---|---|---|---|---|---|---|
| OUT1 | TBOUT 1-2 | — | Water circulation pump 1 output | OFF | ON | 230 V AC 1.0 A Max. |

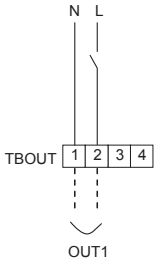


**<Fig. 9.7.5>**

**Wiring specification and local supply parts**

| Item | Name | Model and specifications |
|---|---|---|
| External output function | Outputs wire | Use sheathed vinyl coated cord or cable.<br>Max. 30 m<br>Wire type: CV, CVS or equivalent<br>Wire size: Stranded wire 0.5 mm² to 1.25 mm²<br>Solid wire: ø0.65 mm to ø1.2 mm |

**Note: Do not connect multiple water circulation pumps directly to each output (OUT1). In such a case, connect them via (a) relay(s).**

## Hydrobox

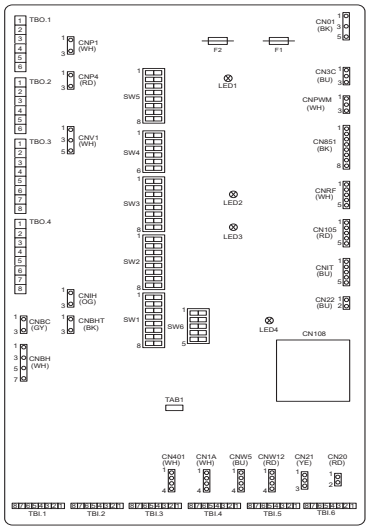


**<Fig. 9.7.6>**

**Signal inputs**

| Name | Terminal block | Connector | Item | OFF (Open) | OFF (Short) |
|---|---|---|---|---|---|
| RC | TBI.6 1-2 | CN22 | Communication cable between indoor units | — | — |
| IN2 | TBI.1 5-6 | — | Flow switch input | Refer to SW2-2 in <9.6 Dip Switch Functions>. | |

**Wiring specification and local supply parts**

| Item | Name | Model and specifications |
|---|---|---|
| Signal input function | Signal input wire | Use sheathed vinyl coated cord or cable.<br>Max. 10 m<br>Wire type: CV, CVS or equivalent<br>Wire size: Stranded wire 0.5 mm² to 1.25 mm²<br>Solid wire: ø0.65 mm to ø1.2 mm |
| | Switch | Non-voltage “a” contact signals<br>Remote switch: minimum applicable load 12 V DC, 1 mA |

**Thermistor inputs**

| Name | Terminal block | Connector | Item | Optional part model |
|---|---|---|---|---|
| TH2 | — | CN21 | Thermistor (Ref. liquid temp.) | — |
| THW1 | — | CNW12 1-2 | Thermistor (Flow water temp.) | — |
| THW2 | — | CNW12 3-4 | Thermistor (Return water temp.) | — |

**Note:**
**Do not splice the wiring to extend or shorten it, or this could affect correct monitoring of each temperature.**
**If the wiring is too long, bundle it with a strap to adjust the length.**

**Outputs**

| Name | Terminal block | Connector | Item | OFF | ON | Signal/Max. current |
|---|---|---|---|---|---|---|
| OUT1 | TBO.1 1-2 | CNP1 | Water circulation pump 1 output | OFF | ON | 230 V AC 1.0 A Max. |
| OUT4 | TBO.2 4-6 | CNV1 | 3-way valve (2-way valve 1) output | Heating | DHW | 230 V AC 0.1 A Max. |
| OUT13 | TBO.4 3-4 | — | 2-way valve 2 output | DHW | Heating | 230 V AC 0.1 A Max. |

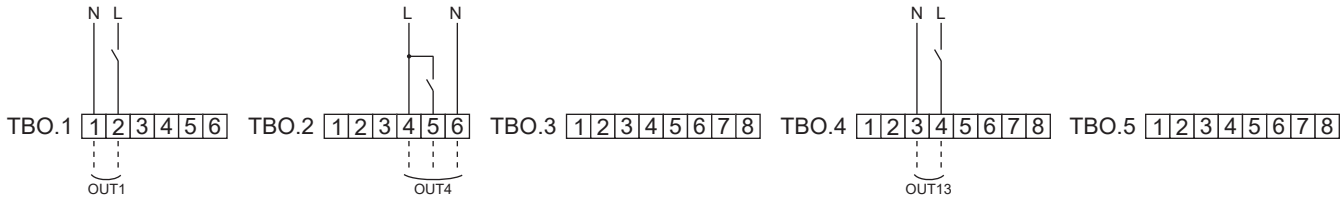


**<Fig. 9.7.7>**

**How to use TBO.1 to 5**

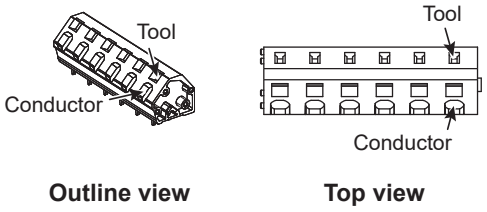


**Outline view** **Top view**

**Connect them using either way as shown above.**

**<Fig. 9.7.8>**

**Wiring specification and local supply parts**

| Item | Name | Model and specifications |
|---|---|---|
| External output function | Outputs wire | Use sheathed vinyl coated cord or cable.<br>Max. 30 m<br>Wire type: CV, CVS or equivalent<br>Wire size: Stranded wire 0.25 mm² to 1.5 mm²<br>Solid wire: 0.25 mm² to 1.5 mm² |

**Note:**
1. **Do not connect multiple water circulation pumps directly to each output (OUT1). In such a case, connect them via (a) relay(s).**
2. **Do not connect water circulation pumps to both TBO.1 1-2 and CNP1 at the same time.**
3. **Stranded wire should be processed with insulation-covered bar terminal (DIN46228-4 standard compatible type).**

## ■ Basic Troubleshooting for multiple outdoor units control

| No. | Fault symptom | Possible cause | Explanation - Solution |
|---|---|---|---|
| 1 | Main remote controller display is blank. | 1. There is no power supply to main remote controller. | 1. Check LED2 on the FTC main controller. (See <Figure 4.5.1>.)<br>(i) When LED2 is lit.<br>Check for damage or contact failure of the main remote controller wiring.<br>(ii) When LED2 is blinking.<br>Refer to No. 4 below.<br>(iii) When LED2 is not lit.<br>Refer to No. 3 below. |
| | | 2. Power is supplied to the main remote controller, however, the display on the main remote controller does not appear. | 2. Check the following:<br>• Disconnection between the main remote controller cable and the FTC main controller.<br>• Failure of the main remote controller if “Please Wait” is not displayed.<br>• Refer to No. 2 below if “Please Wait” is displayed. |
| 2 | “Please Wait” remains displayed on the main remote controller. | 1. "Please Wait" is displayed for up to 6 minutes.<br>2. Communication failure between the main remote controller and FTC main/sub controller.<br>3. Communication failure between FTC sub controller and outdoor unit. | 1. Normal operation.<br>2, 3. Main remote controller start up checks/procedure.<br>(i) If “0%” or “50-99%” is displayed below "Please Wait" there is a communication error between the main remote controller and the FTC main/sub controller.<br>• Check wiring connections on the main remote controller.<br>• Replace the main remote controller or FTC main/sub controller.<br>(ii) If “1-49%” is displayed there is a communication error between the outdoor unit's control board and FTC sub controller.<br>• Check the wiring connections on the outdoor unit control board and the FTC sub controller.<br>(Ensure S1 and S2 are not cross-wired and S3 is securely wired with no damage. (See section 4.5.)<br>• Replace the outdoor unit's control board and/or the sub controller. |
| 3 | Warning symbol is displayed on the main remote controller. | Sub unit failure | 1. Press CONFIRM button on the main remote controller while the warning symbol is displayed.<br>2. Check the error details. |
| 4 | LED2 on FTC main controller is off.<br>(See <Figure 4.5.1>.) | When LED1 on FTC main controller is also off. (See <Figure 4.5.1>.)<br>1. FTC main controller is not supplied with 220 to 240V AC. | 1. Check the voltage across the L and N terminals on the indoor power supply terminal block. (See section 4.5.)<br>• When the voltage is not 220 to 240V AC, check for faulty wiring to power supply.<br>• When the voltage is 220 to 240V AC, go to 2. below. |
| | | 2. There are problems in the method of connecting the connectors. | 2. Check for faulty wiring between the connectors.<br>• When the connectors are wired incorrectly re-wire them correctly referring to below. (See section 4.5 and a wiring diagram on the control and electrical box cover.)<br> 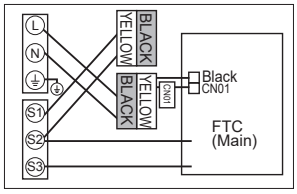 <br><br>• If no problem found with the wiring, go to 3. below. |
| | | 3. FTC Main controller failure | 3. Check the FTC main controller.<br>• Check the fuse on the FTC main controller.<br>• Check for faulty wiring.<br>• Check Dip SW4-2 is ON.<br>• If no problem found with the wiring, the FTC main controller is faulty. |
| 5 | LED2 on FTC is blinking.<br>(See Figure <4.5.1>.) | When LED1 is also blinking on FTC main controller. | Check for faulty wiring in FTC main controller. |
| | | When LED1 on FTC main controller is lit.<br>1. Faulty wiring in main remote controller Multiple indoor units have been wired to a single outdoor unit. | 1. Check for faulty wiring in main remote controller.<br>The number of indoor units that can be wired to a single outdoor unit is one. Additional indoor units must be wired individually to a single outdoor unit. |
| | | 2. Short-circuited wiring in main remote controller<br>3. Main remote controller failure | 2.,3. Remove main remote controller wires and check LED2 on FTC main controller. (See Figure 4.5.1.)<br>• If LED2 is blinking check for short circuits in the main remote controller wiring<br>• If LED2 is lit, wire the main remote controller again and:<br>- if LED2 is blinking, the main remote controller is faulty;<br>- if LED2 is lit, faulty wiring of the main remote controller has been corrected. |
| | | 4. Dip SW setting failure | 4. Check Dip SW 4-2 on the FTC sub controller is OFF. |
| 6 | Main remote controller communication failure<br>E0/E4<br>E3/E5 | 1. Connection failure of the earth cable | 1. Electrical connection (FTC powered via outdoor unit)<br>• Check for looseness or breakage of the earth cables of outdoor units.<br>• Daisy-chain the outdoor units with earth cables and earth them with one of the cables.<br>Electrical connection (FTC powered via independent source)<br>• Check for looseness or breakage of the earth cables of FTC units.<br>• Daisy-chain the FTC units with earth cables and earth them with one of the cables. |
| | | 2. Incorrect wiring of main remote controller. | 2. The main remote controller must NOT be wired to FTC sub controller. |

For other details, refer to "8. Troubleshooting".

## 10.1 Refrigerant collecting (pumpdown) for split model systems only

Refer to “Refrigerant collection” in the outdoor unit installation manual or service manual.

## 10.2 Back-up operation of boiler

Heating operation is backed up by boiler.
For more details, refer to the installation manual of PAC-TH012HT-E.

**<Installation & System set up>**
1. Set Dip-SW 1-1 to ON "With boiler" and SW2-6 to ON “With Mixing tank”.
2. Install the thermistors THWB1 (Flow temp.) *1 on the boiler circuit.
3. Connect the output wire (OUT10: Boiler operation) to the signal input (room thermostat input) on the boiler. *2
4. Install one of the following room temp. thermostats. *3

- Wireless remote controller (option)
- Room temp. thermostat (local supply)
- Main remote controller (remote position)

*1 The boiler temp. thermistor is an optional part.
*2 OUT10 has no voltage across it.
*3 Boiler heating is controlled on/off by the room temp. thermostat.

**<Remote controller settings>**
1. Go to Service menu > Heat source setting and choose “Boiler” or “Hybrid”. *4
2. Go to Service menu > Operation settings > Boiler settings to make detailed settings for “Hybrid” above .

*4 The “Hybrid” automatically switches heat sources between Heat pump (and Electric heater) and boiler.

### ■ Product fiche of temperature control

(a) Supplier’s name: MITSUBISHI ELECTRIC CORPORATION
(b) Supplier’s model identifier: PAR-WT50R-E and PAR-WR51R-E
(c) The class of the temperature control: Ⅵ
(d) The contribution of the temperature control to seasonal space heating energy efficiency: 4%

## Local application factors

* This FTC is designed to connect Mr.Slim/ Ecodan inverter outdoor unit of MITSUBISHI ELECTRIC to local systems. Please check the following when designing the local system.
* MITSUBISHI ELECTRIC does not take any responsibility for the local system design.

### Heat exchanger

(1) Withstanding pressure
Designed pressure of outdoor unit is 4.15 MPa. Following must be satisfied for burst pressure of connecting application.
Burst pressure: More than 12.45 MPa (3 times more than designed pressure)

(2) Performance
Secure the heat exchanger capacity which meets the following conditions. If the conditions are not met, it may result in malfunction caused by the protection operation or the outdoor unit may be turned off due to the operation of protection system.
• In case of hot water supply, condense temperature is less than 58°C in max. frequency operation with the outside temperature 7°C D.B./6°C W.B.

(3) Contamination maintenance
1. Wash the inside of heat exchanger to keep it clean. Be sure to RINSE not to leave flux. Do not use chlorine detergent when washing.
2. Be sure that the amount of contamination per unit cubic content of heat transfer pipe is less than the following amount.
Example) In case of ø9.52 mm
Residual water: 0.6 mg/m, Residual oil: 0.5 mg/m, Solid foreign object: 1.8 mg/m

### Thermistor position

Refer to 4.4.

### Notes

· Install the hydraulic filter at the water inlet pipework.
· Inlet water temperature of heat exchanger should be within the range 5°C - 55°C.
· The water in both primary and sanitary circuit should be clean and with pH value of 6.5-8.0
· The followings are the maximum values;
Calcium: 100 mg/L, Ca hardness: 250 mg/L
Chloride: 100 mg/L, Copper: 0.3 mg/L
· Other constituents should be to European Directive 98/83 EC standards.
· Refrigerant pipe diameter from outdoor unit to refrigerant-water HEX (Only for SPLIT type)
Use the pipe with same diameter size as the refrigerant pipe connection diameter of outdoor unit. (Refer to outdoor unit installation manual.)
· Ensure that there is sufficient anti-freeze chemical in the water circuit. It is recommended to use 7 : 4 anti-freeze to water ratio.
· The water velocity in pipes should be kept within certain limits of material to avoid erosion, corrosion and excessive noise generation.
Be aware, and take care of , that local velocities in small pipes, bends and similar obstructions can exceed the values above.
e.g.) Copper: 1.5 m/s

⚠ **Warning:**
· **Always use water that meets the above quality requirements. Using water that does not meet these standards may result in damage to the system pipework and heating components.**
· **Never use anything other than water as a medium. It may cause a fire or an explosion.**
· **Do not use heated water that is produced by the air to water heat pump directly for drinking or cooking. There is a risk to damage your health. There is also a risk that installing the water heat exchanger may corrode if the necessary water quality for air to water heat pump system cannot be maintained. If you wish to use the heated water from the heated pump for these purposes, take measure such as to the second heat exchanger within the water piping system.**

### Additional Requirements for using R32 Refrigerant

**1. Important Notice (Fire safety)**
R32 is flammable refrigerant, and the fire safety warranty for the whole system (including outdoor unit) must be done by your side.
Conformity of regulations ((e.g. IEC 60335) and laws must be confirmed on the system by your side.

**2. Pressure sensor (Outdoor unit : SUZ-SWM**)**
Pressure sensor (option) is necessary for SUZ-SWM outdoor unit. Refer to the manual of PAC-PS01-E for details.

**3. Flow sensor (Outdoor unit : PUZ-(H)WM**)**
Flow sensor (option) is necessary for PUZ-(H)WM outdoor unit. Refer to the manual of PAC-FS01-E for details.

**4. Pressure relief valve (Outdoor unit : PUZ-(H)WM**)**
Do not attach the pressure relief valve to the heating (cooling) circuit on PUZ-(H)WM outdoor unit.

# Contents


**1 Optional parts list .....D-2**

**2 ATW wireless system .....D-16**

1. Safety precautions ..... D-16
2. Accessories and installation tool ..... D-17
3. Before using ATW wireless system ..... D-17
4. Installing wireless receiver ..... D-18
5. Pairing process ..... D-22
6. Setting wireless remote controllers ..... D-24
7. Wireless receiver operation ..... D-26
8. Specifications ..... D-27
9. FAQ ..... D-28

**3 Immersion heater.....D-29**

**4 EHPT accessories for UK.....D-35**

**5 High temp. thermistor .....D-39**

**6 High temp. thermistor .....D-42**

**7 2 zone kit .....D-45**

**8 Pressure sensor.....D-55**

**9 Flow sensor.....D-57**

**10 Connector for drain hose heater.....D-59**

**11 Muffler.....D-63**

**12 Joint pipe and nut.....D-65**

## Packaged model

<Indoor unit (Cylinder unit)>

| Parts name | Model name | Specification | Cylinder unit | | | | | | | |
|---|---|---|---|---|---|---|---|---|---|---|
| | | | EHPT17X-VM2D | EHPT17X-VM6D | EHPT17X-YM9D | ERPT17X-VM2D | EHPT20X-MED | EHPT20X-VM6D | EHPT20X-YM9D | EHPT20X-YM9ED |
| Wireless remote controller | PAR-WT60R-E | | × | × | × | × | × | × | × | × |
| Wireless receiver | PAR-WR61R-E | | × | × | × | × | × | × | × | × |
| Thermistors | PAC-SE41TS-E | For room temp. | × | × | × | × | × | × | × | × |
| | PAC-TH011-E | For zone (flow and return temp.) | × | × | × | × | × | × | × | × |
| | PAC-TH012HT-E | For boiler and buffer (5 m) | × | × | × | × | × | × | × | × |
| | PAC-TH012HTL-E | For boiler and buffer (30 m) | × | × | × | × | × | × | × | × |
| Immersion heater | PAC-IH01V2-E | 1Ph 1kW | × | × | × | × | × | × | × | × |
| | PAC-IH03V2-E | 1Ph 3kW | × | × | × | × | × | × | × | × |
| EHPT accessories for UK | PAC-WK02UK-E | | - | - | - | - | - | - | - | - |
| Wi-Fi interface | MAC-587IF-E | | × | × | × | × | × | × | × | × |
| 2 zone kit | PAC-TZ02-E | | × | × | × | × | × | × | × | × |
| Expansion vessel kit | PAC-EVP12-E1 | 12L | - | - | - | - | × | - | - | × |

<Indoor unit (Cylinder unit)>

| Parts name | Model name | Specification | Cylinder unit | | | | | | | |
|---|---|---|---|---|---|---|---|---|---|---|
| | | | EHPT20X-TM9D | ERPT20X-MD | ERPT20X-VM2D | ERPT20X-VM6D | EHPT30X-MED | EHPT30X-YM9ED | ERPT30X-VM2ED | EHPT20X-MHEDW |
| Wireless remote controller | PAR-WT60R-E | | × | × | × | × | × | × | × | × |
| Wireless receiver | PAR-WR61R-E | | × | × | × | × | × | × | × | × |
| Thermistors | PAC-SE41TS-E | For room temp. | × | × | × | × | × | × | × | × |
| | PAC-TH011-E | For zone (flow and return temp.) | × | × | × | × | × | × | × | × |
| | PAC-TH012HT-E | For boiler and buffer (5 m) | × | × | × | × | × | × | × | × |
| | PAC-TH012HTL-E | For boiler and buffer (30 m) | × | × | × | × | × | × | × | × |
| Immersion heater | PAC-IH01V2-E | 1Ph 1kW | × | × | × | × | × | × | × | - |
| | PAC-IH03V2-E | 1Ph 3kW | × | × | × | × | × | × | × | - |
| EHPT accessories for UK | PAC-WK02UK-E | | - | - | - | - | - | - | - | × |
| Wi-Fi interface | MAC-587IF-E | | × | × | × | × | × | × | × | × |
| 2 zone kit | PAC-TZ02-E | | × | × | × | × | × | × | × | × |
| Expansion vessel kit | PAC-EVP12-E1 | 12L | - | - | - | - | × | × | × | × |

<Indoor unit (Hydrobox)>

| Parts name | Model name | Specification | Hydrobox | | | | |
|---|---|---|---|---|---|---|---|
| | | | EHPX-MED | EHPX-VM2D | EHPX-VM6D | EHPX-YM9D | EHPX-YM9ED |
| Wireless remote controller | PAR-WT60R-E | | × | × | × | × | × |
| Wireless receiver | PAR-WR61R-E | | × | × | × | × | × |
| Thermistors | PAC-SE41TS-E | For room temp. | × | × | × | × | × |
| | PAC-TH011-E | For zone (flow and return temp.) | × | × | × | × | × |
| | PAC-TH011TK2-E | For tank temp. (5 m) | × | × | × | × | × |
| | PAC-TH011TKL2-E | For tank temp. (30 m) | × | × | × | × | × |
| | PAC-TH012HT-E | For boiler and buffer (5 m) | × | × | × | × | × |
| | PAC-TH012HTL-E | For boiler and buffer (30 m) | × | × | × | × | × |
| Wi-Fi interface | MAC-587IF-E | | × | × | × | × | × |
| 2 zone kit | PAC-TZ02-E | | × | × | × | × | × |
| Expansion vessel kit | PAC-EVP12-E1 | 12L | - | - | - | - | × |

<Outdoor unit>

| Parts name | Model name | Power Inverter | | | | |
|---|---|---|---|---|---|---|
| | | PUZ-WM50VHA(-BS) | PUZ-WM60VAA(-BS) | PUZ-WM85V/ YAA(-BS) | PUZ-WM112V/ YAA(-BS) | PUZ-HWM140V/ YHA(-BS) |
| Connector for Drain Hose Heater Signal Output | PAC-SE60RA-E | × | × | × | × | × |
| | PAC-SE61RA-E | - | - | - | - | - |
| Air discharge Guide | MAC-886SG-E | - | - | - | - | - |
| | PAC-SJ07SG-E | - | - | - | - | - |
| | PAC-SG59SG-E | × | - | - | - | × |
| | PAC-SH96SG-E | - | ×*2 | ×*2 | ×*2 | - |
| Air Protection Guide | PAC-SJ06AG-E | - | - | - | - | - |
| | PAC-SH63AG-E | × | - | - | - | × |
| | PAC-SH95AG-E | - | ×*2 | ×*2 | ×*2 | - |
| Attachment | PAC-SJ82AT-E | - | × | × | × | - |
| Drain Socket | PAC-SG61DS-E | × | × | × | × | - |
| | PAC-SJ08DS-E | - | - | - | - | - |
| Centralized Drain Pan*1 | PAC-SG63DP-E | - | - | - | - | - |
| | PAC-SG64DP-E | × | - | - | - | - |
| | PAC-SH97DP-E | - | - | - | - | - |
| | PAC-SJ83DP-E | - | × | × | × | - |
| Control/Service Tool | PAC-SK52ST | × | × | × | × | × |
| Defrost Heater | MAC-642BH-U1 | - | - | - | - | - |

*1 Cannot be used for cold climate.
*2 Attachment (PAC-SJ82AT-E) is necessary for the Air Guide.

<Interface/Flow temperature control>

| Parts name | Model name | Specification | Power Inverter | | | | |
|---|---|---|---|---|---|---|---|
| | | | PUZ-WM50VHA(-BS) | PUZ-WM60VAA(-BS) | PUZ-WM85V/ YAA(-BS) | PUZ-WM112V/ YAA(-BS) | PUZ-HWM140V/ YHA(-BS) |
| Flow Temperature Controller | PAC-IF033B-E | 1 PC Board w/ Case | ×*3 | ×*3 | ×*3 | ×*3 | ×*3 |
| System controllers | PAC-IF072B-E | 1 PC Board w/ Case | ×*3 | ×*3 | ×*3 | ×*3 | ×*3 |
| | PAC-SIF051B-E | 1 PC Board w/ Case | - | - | - | - | - |
| Flow sensor | PAC-FS01-E | 1 PC Flow sensor | × | × | × | × | × |
| Thermistor | PAC-TH011-E | | × | × | × | × | × |

*3 Flow sensor (PAC-FS01-E) is required.

# 1 Optional parts list

CONTENTS

| Parts name | Model name | Contents | Q'ty |
|---|---|---|---|
| Air discharge guide | MAC-886SG-E | Air discharge guide | 1 |
| | | Screw | 4 |
| | PAC-SJ07SG-E | Air discharge guide | 1 |
| | | Support (For right and left) | 2 |
| | | Attachment screw(5×10) | 4 |
| | | Attachment screw(4×10) | 4 |
| | PAC-SG59SG-E | Air discharge guide | 1 |
| | | Attachment screw(5×35) | 4 |
| | | Spacer | 4 |
| | PAC-SH96SG-E | Air discharge guide | 1 |
| | | Support | 1 |
| | | Screw(5×15) | 12 |
| | | Washer | 12 |
| | | Spring washer | 12 |
| Air protection guide | PAC-SJ06AG-E | Air protect guide | 1 |
| | | Mounting screw (4×16) | 4 |
| | | Washer (for screw 4×16) | 4 |
| | | Spring washer | 4 |
| | PAC-SH63AG-E | Air guide | 1 |
| | | Mounting screw (5×15) | 4 |
| | | Washer | 4 |
| | | Spring washer | 4 |
| | PAC-SH95AG-E | Air guide | 1 |
| | | Mounting screw (5×15) | 6 |
| | | Washer | 6 |
| | | Spring washer | 6 |
| Drain socket | PAC-SG61DS-E | Drain socket | 1 |
| | | Drain cap (φ33) | 5 |
| | | Heat insulator | 3 |
| | | Band | 8 |
| | PAC-SJ08DS-E | Drain socket | 1 |
| Centralized drain pan | PAC-SG63DP-E | Centralized drain pan | 1 |
| | PAC-SG64DP-E | Centralized drain pan | 1 |
| | PAC-SH97DP-E | Centralized drain pan | 1 |
| | PAC-SJ83DP-E | Centralized drain pan | 1 |
| Control/Service tool | PAC-SK52ST | Control/Service Tool | 1 |
| Defrost Heater | MAC-642BH-U1 | Defrost heater (with 2-pin lead assembly) | 1 |
| | | Heater support | 1 |
| | | Cable tie | 1 |
| | | Cable clamp | 1 |
| | | Self drilling screw | 2 |
| | | Wiring diagram | 1 |
| | | Insulation | 1 |
| | | 3-pin lead assembly | 1 |
| Capacity step control interface | PAC-IF011B-E | PC Board | 1 |
| | | Case | 1 |
| | | Thermistor | 2 |
| Flow temperature controller | PAC-IF033B-E | PC Board | 1 |
| | | Case | 1 |
| | | Thermistor | 3 |
| | | Remote controller | 1 |
| | | Remote controller cable (5m) | 1 |
| System controllers | PAC-IF072B-E | PC Board | 1 |
| | | Case | 1 |
| | | Flow/Return water temp. thermistor | 1 |
| | | Remote controller | 1 |
| | | Remote controller cable (10m) | 1 |
| | | SD memory card | 1 |
| | PAC-SIF051B-E | PC Board | 1 |
| | | Case | 1 |
| | | Thermistor | 1 |
| | | Flow/Return water temp thermistor | 1 |
| | | Remote controller cable (10m) | 1 |
| | | SD memory card | 1 |
| Thermistors | PAC-TH011-E | For zone (flow and return temp.) | 20[1)] |
| | PAC-TH011TK2-E | For tank temp. (5m) | 10[2)] |
| | PAC-TH011TKL2-E | For tank temp. (30m) | 5[3)] |
| | PAC-TH012HT-E | For boiler and buffer (5m) | 10[2)] |
| | PAC-TH012HTL-E | For boiler and buffer (30m) | 5[3)] |
| 2 zone kit | PAC-TZ02-E | 2 zone kit | 1 |
| | | Flexible hose | 2 |
| | | Conversion joint | 2 |
| | | Gasket | 4 |
| Attachment | PAC-SJ82AT-E | Attachment | 2 |
| | | Mounting screw 5×15 | 8 |
| | | Washer | 8 |
| | | Spring washer | 8 |

# 1 Optional parts list

| Parts name | Model name | Contents | Q'ty |
|---|---|---|---|
| Wi-Fi interface | MAC-587IF-E | Interface unit (with connecting cable) | 1 |
| | | Fixing screw 3.5×16 mm | 2 |
| | | Fixing screw 4×16 mm | 1 |
| | | Mounting cord clamp | 1 |
| | | Fastener (for bundling the wires) | 1 |
| | | Holder | 1 |
| | | Clip | 1 |
| Pressure sensor | PAC-PS01-E | Pressure sensor | 20 |
| Flow sensor | PAC-FS01-E | Flow sensor body | 1 |
| | | Flow sensor cable | 1 |
| | | O-ring | 2 |
| Expansion vessel kit | PAC-EVP12-E1 | Expansion vessel 12L | 1 |
| | | 5 bar pressure relief valve | 1 |

Notes:
1) Two thermistors per package; 10 packages per carton
2) One thermistors per package; 10 packages per carton
3) One thermistors per package; 5 packages per carton

## Split model

<Indoor unit (Cylinder unit)>

| Parts name | Model name | Specification | Cylinder unit | | | | | | | |
|---|---|---|---|---|---|---|---|---|---|---|
| | | | EHST17D-VM2D | ERST17D-VM2D | ERST17D-VM2BD | ERST17D-VM6BD | ERST17D-YM9BD | EHST20D-MED | EHST20D-VM2D | EHST20D-VM6D |
| Wireless remote controller | PAR-WT60R-E | | × | × | × | × | × | × | × | × |
| Wireless receiver | PAR-WR61R-E | | × | × | × | × | × | × | × | × |
| Thermistors | PAC-SE41TS-E | For room temp. | × | × | × | × | × | × | × | × |
| | PAC-TH011-E | For zone (flow and return temp.) | × | × | × | × | × | × | × | × |
| | PAC-TH011TK2-E | For tank temp. (5 m) | — | — | — | — | — | — | — | — |
| | PAC-TH011TKL2-E | For tank temp. (30 m) | — | — | — | — | — | — | — | — |
| | PAC-TH012HT-E | For boiler and buffer (5 m) | × | × | × | × | × | × | × | × |
| | PAC-TH012HTL-E | For boiler and buffer (30 m) | × | × | × | × | × | × | × | × |
| Immersion heater | PAC-IH01V2-E | 1Ph 1kW | × | × | × | × | × | × | × | × |
| | PAC-IH03V2-E | 1Ph 3kW | × | × | × | × | × | × | × | × |
| Joint pipe | PAC-SG72RJ-E | For PUHZ-SW75 ø6.35→ø9.52 | × | × | × | × | × | × | × | × |
| | PAC-SG73RJ-E | For PUHZ-SW200YKA/ SHW230YKA2(-BS) ø9.52→ø12.7 | — | — | — | — | — | — | — | — |
| | PAC-SG74RJ-E | For PUHZ-SW75 ø12.7→ø15.88 | × | × | × | × | × | × | × | × |
| Wi-Fi interface | MAC-587IF-E | | × | × | × | × | × | × | × | × |
| 2 zone kit | PAC-TZ02-E | | × | × | × | × | × | × | × | × |
| Expansion vessel kit | PAC-EVP12-E1 | 12L | — | — | — | — | — | × | — | — |
| Joint pipe and nut | MAC-001FN-E | For PUZ-S(H)WM | × | × | × | × | × | × | × | × |

<Indoor unit (Cylinder unit)>

| Parts name | Model name | Specification | Cylinder unit | | |
|---|---|---|---|---|---|
| | | | EHST20D-YM9D | EHST20D-YM9ED | EHST20D-TM9D |
| Wireless remote controller | PAR-WT60R-E | | × | × | × |
| Wireless receiver | PAR-WR61R-E | | × | × | × |
| Thermistors | PAC-SE41TS-E | For room temp. | × | × | × |
| | PAC-TH011-E | For zone (flow and return temp.) | × | × | × |
| | PAC-TH011TK2-E | For tank temp. (5 m) | — | — | — |
| | PAC-TH011TKL2-E | For tank temp. (30 m) | — | — | — |
| | PAC-TH012HT-E | For boiler and buffer (5 m) | × | × | × |
| | PAC-TH012HTL-E | For boiler and buffer (30 m) | × | × | × |
| Immersion heater | PAC-IH01V2-E | 1Ph 1kW | × | × | × |
| | PAC-IH03V2-E | 1Ph 3kW | × | × | × |
| Joint pipe | PAC-SG72RJ-E | For PUHZ-SW75 ø6.35→ø9.52 | × | × | × |
| | PAC-SG73RJ-E | For PUHZ-SW200YKA/ SHW230YKA2(-BS) ø9.52→ø12.7 | — | — | — |
| | PAC-SG74RJ-E | For PUHZ-SW75 ø12.7→ø15.88 | × | × | × |
| Wi-Fi interface | MAC-587IF-E | | × | × | × |
| 2 zone kit | PAC-TZ02-E | | × | × | × |
| Expansion vessel kit | PAC-EVP12-E1 | 12L | — | × | — |
| Joint pipe and nut | MAC-001FN-E | For PUZ-S(H)WM | × | × | × |

| Parts name | Model name | Specification | Cylinder unit | | | | | |
|---|---|---|---|---|---|---|---|---|
| | | | ERST20D-VM2D | EHST30D-MED | EHST30D-VM6ED | EHST30D-YM9ED | EHST30D-TM9ED | ERST30D-VM2ED |
| Wireless remote controller | PAR-WT60R-E | | × | × | × | × | × | × |
| Wireless receiver | PAR-WR61R-E | | × | × | × | × | × | × |
| Thermistors | PAC-SE41TS-E | For room temp. | × | × | × | × | × | × |
| | PAC-TH011-E | For zone (flow and return temp.) | × | × | × | × | × | × |
| | PAC-TH011TK2-E | For tank temp. (5 m) | — | — | — | — | — | — |
| | PAC-TH011TKL2-E | For tank temp. (30 m) | — | — | — | — | — | — |
| | PAC-TH012HT-E | For boiler and buffer (5 m) | × | × | × | × | × | × |
| | PAC-TH012HTL-E | For boiler and buffer (30 m) | × | × | × | × | × | × |
| Immersion heater | PAC-IH01V2-E | 1Ph 1kW | × | × | × | × | × | × |
| | PAC-IH03V2-E | 1Ph 3kW | × | × | × | × | × | × |
| Joint pipe | PAC-SG72RJ-E | For PUHZ-SW75 ø6.35→ø9.52 | × | × | × | × | × | × |
| | PAC-SG73RJ-E | For PUHZ-SW200YKA/ SHW230YKA2(-BS) ø9.52→ø12.7 | — | — | — | — | — | — |
| | PAC-SG74RJ-E | For PUHZ-SW75 ø12.7→ø15.88 | × | × | × | × | × | × |
| Wi-Fi interface | MAC-587IF-E | | × | × | × | × | × | × |
| 2 zone kit | PAC-TZ02-E | | × | × | × | × | × | × |
| Expansion vessel kit | PAC-EVP12-E1 | 12L | — | × | × | × | × | × |
| Joint pipe and nut | MAC-001FN-E | For PUZ-S(H)WM | × | × | × | × | × | × |

<Indoor unit (Hydrobox)>

| Parts name | Model name | Specification | Hydrobox | | | | | | | |
|---|---|---|---|---|---|---|---|---|---|---|
| | | | EHSD-MED | EHSD-VM2D | EHSD-VM6D | EHSD-YM9D | EHSD-YM9ED | EHSD-TM9D | ERSD-MED | ERSD-VM2D |
| Wireless remote controller | PAR-WT60R-E | | × | × | × | × | × | × | × | × |
| Wireless receiver | PAR-WR61R-E | | × | × | × | × | × | × | × | × |
| Thermistors | PAC-SE41TS-E | For room temp. | × | × | × | × | × | × | × | × |
| | PAC-TH011-E | For zone (flow and return temp.) | × | × | × | × | × | × | × | × |
| | PAC-TH011TK2-E | For tank temp. (5 m) | × | × | × | × | × | × | × | × |
| | PAC-TH011TKL2-E | For tank temp. (30 m) | × | × | × | × | × | × | × | × |
| | PAC-TH012HT-E | For boiler and buffer (5 m) | × | × | × | × | × | × | × | × |
| | PAC-TH012HTL-E | For boiler and buffer (30 m) | × | × | × | × | × | × | × | × |
| Joint pipe | PAC-SG72RJ-E | For PUHZ-SW75 ø6.35→ø9.52 | × | × | × | × | × | × | × | × |
| | PAC-SG73RJ-E | For PUHZ-SW200YKA/ SHW230YKA2(-BS) ø9.52→ø12.7 | — | — | — | — | — | — | — | — |
| | PAC-SG74RJ-E | For PUHZ-SW75 ø12.7→ø15.88 | × | × | × | × | × | × | × | × |
| Wi-Fi interface | MAC-587IF-E | | × | × | × | × | × | × | × | × |
| 2 zone kit | PAC-TZ02-E | | × | × | × | × | × | × | × | × |
| Expansion vessel kit | PAC-EVP12-E1 | 12L | × | — | — | — | × | — | × | — |
| Joint pipe and nut | MAC-001FN-E | For PUZ-S(H)WM | × | × | × | × | × | × | × | × |

<Indoor unit (GSHP)>

| Parts name | Model name | Specification | GSHP |
|---|---|---|---|
| | | | EHGT17D-YM9ED |
| Wireless remote controller | PAR-WT60R-E | | × |
| Wireless receiver | PAR-WR61R-E | | × |
| Thermistors | PAC-SE41TS-E | For room temp. | × |
| | PAC-TH011-E | For zone (flow and return temp.) | × |
| | PAC-TH011TK2-E | For tank temp. (5 m) | × |
| | PAC-TH011TKL2-E | For tank temp. (30 m) | × |
| | PAC-TH012HT-E | For boiler and buffer (5 m) | × |
| | PAC-TH012HTL-E | For boiler and buffer (30 m) | × |
| Immersion heater | PAC-IH01V2-E | 1Ph 1W | × |
| Wi-Fi interface | MAC-587IF-E | | × |
| 2 zone kit | PAC-TZ02-E | | × |
| Expansion vessel kit | PAC-EVP12-E1 | 12L | × |

<Indoor unit (WTW)>

| Parts name | Model name | Specification | WTW |
|---|---|---|---|
| | | | EHWT17D-MHEDW |
| Wireless remote controller | PAR-WT60R-E | | × |
| Wireless receiver | PAR-WR61R-E | | × |
| Thermistors | PAC-SE41TS-E | For room temp. | × |
| | PAC-TH011-E | For zone (flow and return temp.) | × |
| | PAC-TH011TK2-E | For tank temp. (5 m) | × |
| | PAC-TH011TKL2-E | For tank temp. (30 m) | × |
| | PAC-TH012HT-E | For boiler and buffer (5 m) | × |
| | PAC-TH012HTL-E | For boiler and buffer (30 m) | × |
| Wi-Fi interface | MAC-587IF-E | | × |
| 2 zone kit | PAC-TZ02-E | | × |
| Expansion vessel kit | PAC-EVP12-E1 | 12L | × |
| EHPT accessories for UK | PAC-WK02UK-E | | × |

<Outdoor unit>

| Parts name | Model name | Eco Inverter | | | | | | |
|---|---|---|---|---|---|---|---|---|
| | | SUZ-SWM30VA | SUZ-SWM40VA | SUZ-SWM40VA2 | SUZ-SWM60VA | SUZ-SWM60VA2 | SUZ-SWM80VA | SUZ-SWM80VA2 |
| Connector for Drain Hose Heater Signal Output | PAC-SE60RA-E | — | — | — | — | — | — | — |
| | PAC-SE61RA-E | — | — | — | — | — | — | — |
| | MAC-061RA-E | × | — | × | — | × | — | × |
| | MAC-062RA-E | — | — | — | — | — | — | — |
| Air discharge Guide | MAC-886SG-E | — | × | — | × | — | × | — |
| | MAC-882SG | × | — | × | — | × | — | — |
| | MAC-890SG-E | — | — | — | — | — | — | × |
| | PAC-SJ07SG-E | — | — | — | — | — | — | — |
| | PAC-SG59SG-E | — | — | — | — | — | — | — |
| | PAC-SH96SG-E | — | — | — | — | — | — | — |
| Air Protection Guide | PAC-SJ06AG-E | — | — | — | — | — | — | — |
| | PAC-SH63AG-E | — | — | — | — | — | — | — |
| | PAC-SH95AG-E | — | — | — | — | — | — | — |
| Attachment | PAC-SJ82AT-E | — | — | — | — | — | — | — |
| Drain Socket*1 | PAC-SG61DS-E | — | — | — | — | — | — | — |
| | PAC-SJ08DS-E | — | — | — | — | — | — | — |
| Centralized Drain Pan*1 | PAC-SG63DP-E | — | — | — | — | — | — | — |
| | PAC-SG64DP-E | — | — | — | — | — | — | — |
| | PAC-SH97DP-E | — | — | — | — | — | — | — |
| | PAC-SJ83DP-E | — | — | — | — | — | — | — |
| Control/Service Tool | PAC-SK52ST | — | — | — | — | — | — | — |
| Defrost Heater | MAC-642BH-U1 | — | × | — | × | — | × | — |
| Muffler | MAC-001MF-E | — | — | — | — | — | — | — |
| Joint pipe and nut | MAC-001FN-E | — | — | — | — | — | — | — |

<Outdoor unit>

| Parts name | Model name | Eco Inverter (Standard) | | | Eco Inverter (Hyper Heating) | | |
|---|---|---|---|---|---|---|---|
| | | SUZ-SWM80VAH2 | SUZ-SWM100VA | SUZ-SWM100VAH | SUZ-SHWM30VAH | SUZ-SHWM40VAH | SUZ-SHWM60VAH |
| Connector for Drain Hose Heater Signal Output | PAC-SE60RA-E | — | — | — | — | — | — |
| | PAC-SE61RA-E | — | — | — | — | — | — |
| | MAC-061RA-E | — | × | — | — | — | — |
| | MAC-062RA-E | — | — | — | — | — | — |
| Air discharge Guide | MAC-886SG-E | — | — | — | — | — | — |
| | MAC-882SG | — | — | — | × | × | — |
| | MAC-890SG-E | × | × | × | — | — | × |
| | PAC-SJ07SG-E | — | — | — | — | — | — |
| | PAC-SG59SG-E | — | — | — | — | — | — |
| | PAC-SH96SG-E | — | — | — | — | — | — |
| Air Protection Guide | PAC-SJ06AG-E | — | — | — | — | — | — |
| | PAC-SH63AG-E | — | — | — | — | — | — |
| | PAC-SH95AG-E | — | — | — | — | — | — |
| Attachment | PAC-SJ82AT-E | — | — | — | — | — | — |
| Drain Socket*1 | PAC-SG61DS-E | — | — | — | — | — | — |
| | PAC-SJ08DS-E | — | — | — | — | — | — |
| Centralized Drain Pan*1 | PAC-SG63DP-E | — | — | — | — | — | — |
| | PAC-SG64DP-E | — | — | — | — | — | — |
| | PAC-SH97DP-E | — | — | — | — | — | — |
| | PAC-SJ83DP-E | — | — | — | — | — | — |
| Control/Service Tool | PAC-SK52ST | — | — | — | — | — | — |
| Defrost Heater | MAC-642BH-U1 | — | — | — | — | — | — |
| Muffler | MAC-001MF-E | — | — | — | — | — | — |
| Joint pipe and nut | MAC-001FN-E | — | — | — | — | — | — |

<Outdoor unit>

| Parts name | Model name | Power Inverter | | | | |
|---|---|---|---|---|---|---|
| | | PUZ-SWM60VAA | PUZ-SWM80VAA<br>PUZ-SWM80YAA | PUZ-SWM100VAA<br>PUZ-SWM100YAA | PUZ-SWM120VAA<br>PUZ-SWM120YAA | PUZ-SWM140VAA<br>PUZ-SWM140YAA |
| Connector for Drain Hose Heater Signal Output | PAC-SE60RA-E | × | × | × | × | × |
| | PAC-SE61RA-E | — | — | — | — | — |
| | MAC-061RA-E | — | — | — | — | — |
| | MAC-062RA-E | — | — | — | — | — |
| Air discharge Guide | MAC-886SG-E | — | — | — | — | — |
| | MAC-882SG | — | — | — | — | — |
| | MAC-890SG-E | — | — | — | — | — |
| | PAC-SJ07SG-E | — | — | — | — | — |
| | PAC-SG59SG-E | — | — | — | — | — |
| | PAC-SH96SG-E | ×*2 | ×*2 | ×*2 | ×*2 | ×*2 |
| Air Protection Guide | PAC-SJ06AG-E | — | — | — | — | — |
| | PAC-SH63AG-E | — | — | — | — | — |
| | PAC-SH95AG-E | ×*2 | ×*2 | ×*2 | ×*2 | ×*2 |
| Attachment | PAC-SJ82AT-E | × | × | × | × | × |
| Drain Socket*1 | PAC-SG61DS-E | × | × | × | × | × |
| | PAC-SJ08DS-E | — | — | — | — | — |
| Centralized Drain Pan*1 | PAC-SG63DP-E | — | — | — | — | — |
| | PAC-SG64DP-E | — | — | — | — | — |
| | PAC-SH97DP-E | — | — | — | — | — |
| | PAC-SJ83DP-E | × | × | × | × | × |
| Control/Service Tool | PAC-SK52ST | × | × | × | × | × |
| Defrost Heater | MAC-642BH-U1 | — | — | — | — | — |
| Muffler | MAC-001MF-E | — | — | — | — | — |
| Joint pipe and nut | MAC-001FN-E | × | × | × | × | × |

<Outdoor unit>

| Parts name | Model name | ZUBADAN | | | | |
|---|---|---|---|---|---|---|
| | | PUZ-SHWM60VAA | PUZ-SHWM80VAA<br>PUZ-SHWM80YAA | PUZ-SHWM100VAA<br>PUZ-SHWM100YAA | PUZ-SHWM120VAA<br>PUZ-SHWM120YAA | PUZ-SHWM140VAA<br>PUZ-SHWM140YAA |
| Connector for Drain Hose Heater Signal Output | PAC-SE60RA-E | × | × | × | × | × |
| | PAC-SE61RA-E | — | — | — | — | — |
| | MAC-061RA-E | — | — | — | — | — |
| | MAC-062RA-E | — | — | — | — | — |
| Air discharge Guide | MAC-886SG-E | — | — | — | — | — |
| | MAC-882SG | — | — | — | — | — |
| | MAC-890SG-E | — | — | — | — | — |
| | PAC-SJ07SG-E | — | — | — | — | — |
| | PAC-SG59SG-E | — | — | — | — | — |
| | PAC-SH96SG-E | ×*2 | ×*2 | ×*2 | ×*2 | ×*2 |
| Air Protection Guide | PAC-SJ06AG-E | — | — | — | — | — |
| | PAC-SH63AG-E | — | — | — | — | — |
| | PAC-SH95AG-E | ×*2 | ×*2 | ×*2 | ×*2 | ×*2 |
| Attachment | PAC-SJ82AT-E | × | × | × | × | × |
| Drain Socket*1 | PAC-SG61DS-E | × | × | × | × | × |
| | PAC-SJ08DS-E | — | — | — | — | — |
| Centralized Drain Pan*1 | PAC-SG63DP-E | — | — | — | — | — |
| | PAC-SG64DP-E | — | — | — | — | — |
| | PAC-SH97DP-E | — | — | — | — | — |
| | PAC-SJ83DP-E | × | × | × | × | × |
| Control/Service Tool | PAC-SK52ST | × | × | × | × | × |
| Defrost Heater | MAC-642BH-U1 | — | — | — | — | — |
| Muffler | MAC-001MF-E | — | — | — | — | — |
| Joint pipe and nut | MAC-001FN-E | × | × | × | × | × |

*1 Cannot be used for cold climate.
*2 Attachment (PAC-SJ82AT-E) is necessary for the Air Guide.

<Outdoor unit>

| Parts name | Model name | Power Inverter | | | |
|---|---|---|---|---|---|
| | | PUD-SWM60VAA | PUD-SWM80VAA<br>PUD-SWM80YAA | PUD-SWM100VAA<br>PUD-SWM100YAA | PUD-SWM120VAA<br>PUD-SWM120YAA |
| Connector for Drain Hose Heater Signal Output | PAC-SE60RA-E | × | × | × | × |
| | PAC-SE61RA-E | — | — | — | — |
| | MAC-061RA-E | — | — | — | — |
| | MAC-062RA-E | — | — | — | — |
| Air discharge Guide | MAC-886SG-E | — | — | — | — |
| | MAC-882SG | — | — | — | — |
| | MAC-890SG-E | — | — | — | — |
| | PAC-SJ07SG-E | — | — | — | — |
| | PAC-SG59SG-E | — | — | — | — |
| | PAC-SH96SG-E | ×*2 | ×*2 | ×*2 | ×*2 |
| Air Protection Guide | PAC-SJ06AG-E | — | — | — | — |
| | PAC-SH63AG-E | — | — | — | — |
| | PAC-SH95AG-E | ×*2 | ×*2 | ×*2 | ×*2 |
| Attachment | PAC-SJ82AT-E | × | × | × | × |
| Drain Socket*1 | PAC-SG61DS-E | × | × | × | × |
| | PAC-SJ08DS-E | — | — | — | — |
| Centralized Drain Pan*1 | PAC-SG63DP-E | — | — | — | — |
| | PAC-SG64DP-E | — | — | — | — |
| | PAC-SH97DP-E | — | — | — | — |
| | PAC-SJ83DP-E | × | × | × | × |
| Control/Service Tool | PAC-SK52ST | × | × | × | × |
| Defrost Heater | MAC-642BH-U1 | — | — | — | — |
| Muffler | MAC-001MF-E | — | — | — | — |
| Joint pipe and nut | MAC-001FN-E | — | — | — | — |

| Parts name | Model name | ZUBADAN | | | | | PXZ-ecodan | |
|---|---|---|---|---|---|---|---|---|
| | | PUD-SHWM60VAA | PUD-SHWM80VAA<br>PUD-SHWM80YAA | PUD-SHWM100VAA<br>PUD-SHWM100YAA | PUD-SHWM120VAA<br>PUD-SHWM120YAA | PUD-SHWM140VAA<br>PUD-SHWM140YAA | PXZ-4F75VG | PXZ-5F85VG |
| Connector for Drain Hose Heater Signal Output | PAC-SE60RA-E | × | × | × | × | × | — | — |
| | PAC-SE61RA-E | — | — | — | — | — | — | — |
| | MAC-061RA-E | — | — | — | — | — | — | — |
| | MAC-062RA-E | — | — | — | — | — | × | × |
| Air discharge Guide | MAC-886SG-E | — | — | — | — | — | — | — |
| | MAC-882SG | — | — | — | — | — | — | — |
| | MAC-890SG-E | — | — | — | — | — | — | — |
| | PAC-SJ07SG-E | — | — | — | — | — | — | — |
| | PAC-SG59SG-E | — | — | — | — | — | — | — |
| | PAC-SH96SG-E | ×*2 | ×*2 | ×*2 | ×*2 | ×*2 | — | — |
| Air Protection Guide | PAC-SJ06AG-E | — | — | — | — | — | — | — |
| | PAC-SH63AG-E | — | — | — | — | — | — | — |
| | PAC-SH95AG-E | ×*2 | ×*2 | ×*2 | ×*2 | ×*2 | — | — |
| Attachment | PAC-SJ82AT-E | × | × | × | × | × | — | — |
| Drain Socket*1 | PAC-SG61DS-E | × | × | × | × | × | — | — |
| | PAC-SJ08DS-E | — | — | — | — | — | — | — |
| Centralized Drain Pan*1 | PAC-SG63DP-E | — | — | — | — | — | — | — |
| | PAC-SG64DP-E | — | — | — | — | — | — | — |
| | PAC-SH97DP-E | — | — | — | — | — | — | — |
| | PAC-SJ83DP-E | × | × | × | × | × | — | — |
| Control/Service Tool | PAC-SK52ST | × | × | × | × | × | — | — |
| Defrost Heater | MAC-642BH-U1 | — | — | — | — | — | — | — |
| Muffler | MAC-001MF-E | — | — | — | — | — | × | × |
| Joint pipe and nut | MAC-001FN-E | — | — | — | — | — | — | — |

*1 Cannot be used for cold climate.
*2 Attachment (PAC-SJ82AT-E) is necessary for the Air Guide.

<Interface/Flow temperature control>

| Parts name | Model name | Specification | Eco Inverter (Standard) | | | | | | |
|---|---|---|---|---|---|---|---|---|---|
| | | | SUZ-SWM30VA | SUZ-SWM40VA | SUZ-SWM40VA2 | SUZ-SWM60VA | SUZ-SWM60VA2 | SUZ-SWM80VA | SUZ-SWM80VA2 |
| Flow Temperature Controller | PAC-IF033B-E | 1 PC Board w/ Case | — | — | — | — | — | — | — |
| System controllers | PAC-IF071B-E | 1 PC Board w/ Case | ×*3 | ×*3 | ×*3 | ×*3 | ×*3 | ×*3 | ×*3 |
| | PAC-SIF051B-E | 1 PC Board w/ Case | — | — | — | — | — | — | — |
| Pressure sensor | PAC-PS01-E | 20 PC Pressure sensor | × | × | × | × | × | × | × |
| Flow sensor | PAC-FS01-E | 1 PC Flow sensor | × | × | × | × | × | × | × |
| Thermistor | PAC-TH011-E | | × | × | × | × | × | × | × |

*3 Pressure sensor (PAC-PS01-E) is required.

| Parts name | Model name | Specification | Eco Inverter (Standard) | | | Eco Inverter (Hyper Heating) | | |
|---|---|---|---|---|---|---|---|---|
| | | | SUZ-SWM80VAH2 | SUZ-SWM100VA | SUZ-SWM100VAH | SUZ-SHWM30VAH | SUZ-SHWM40VAH | SUZ-SHWM60VAH |
| Flow Temperature Controller | PAC-IF033B-E | 1 PC Board w/ Case | — | — | — | — | — | — |
| System controllers | PAC-IF071B-E | 1 PC Board w/ Case | ×*3 | ×*3 | ×*3 | ×*3 | ×*3 | ×*3 |
| | PAC-SIF051B-E | 1 PC Board w/ Case | — | — | — | — | — | — |
| Pressure sensor | PAC-PS01-E | 20 PC Pressure sensor | × | × | × | × | × | × |
| Flow sensor | PAC-FS01-E | 1 PC Flow sensor | × | × | × | × | × | × |
| Thermistor | PAC-TH011-E | | × | × | × | × | × | × |

*3 Pressure sensor (PAC-PS01-E) is required.

| Parts name | Model name | Specification | Power Inverter | | | | |
|---|---|---|---|---|---|---|---|
| | | | PUZ-SWM60VAA | PUZ-SWM80VAA<br>PUZ-SWM80YAA | PUZ-SWM100VAA<br>PUZ-SWM100YAA | PUZ-SWM120VAA<br>PUZ-SWM120YAA | PUZ-SWM140VAA<br>PUZ-SWM140YAA |
| Flow Temperature Controller | PAC-IF033B-E | 1 PC Board w/ Case | — | — | — | — | — |
| System controllers | PAC-IF071B-E | 1 PC Board w/ Case | — | — | — | — | — |
| | PAC-SIF051B-E | 1 PC Board w/ Case | — | — | — | — | — |
| Pressure sensor | PAC-PS01-E | 20 PC Pressure sensor | — | — | — | — | — |
| Flow sensor | PAC-FS01-E | 1 PC Flow sensor | — | — | — | — | — |
| Thermistor | PAC-TH011-E | | — | — | — | — | — |

| Parts name | Model name | Specification | ZUBADAN | | | | |
|---|---|---|---|---|---|---|---|
| | | | PUZ-SHWM60VAA | PUZ-SHWM80VAA<br>PUZ-SHWM80YAA | PUZ-SHWM100VAA<br>PUZ-SHWM100YAA | PUZ-SHWM120VAA<br>PUZ-SHWM120YAA | PUZ-SHWM140VAA<br>PUZ-SHWM140YAA |
| Flow Temperature Controller | PAC-IF033B-E | 1 PC Board w/ Case | — | — | — | — | — |
| System controllers | PAC-IF071B-E | 1 PC Board w/ Case | — | — | — | — | — |
| | PAC-SIF051B-E | 1 PC Board w/ Case | — | — | — | — | — |
| Pressure sensor | PAC-PS01-E | 20 PC Pressure sensor | — | — | — | — | — |
| Flow sensor | PAC-FS01-E | 1 PC Flow sensor | — | — | — | — | — |
| Thermistor | PAC-TH011-E | | — | — | — | — | — |

# 1 Optional parts list

| Parts name | Model name | Specification | Power Inverter | | | |
|---|---|---|---|---|---|---|
| | | | PUD-SWM60VAA | PUD-SWM80VAA<br>PUD-SWM80YAA | PUD-SWM100VAA<br>PUD-SWM100YAA | PUD-SWM120VAA<br>PUD-SWM120YAA |
| Flow Temperature Controller | PAC-IF033B-E | 1 PC Board w/ Case | — | — | — | — |
| System controllers | PAC-IF071B-E | 1 PC Board w/ Case | — | — | — | — |
| | PAC-SIF051B-E | 1 PC Board w/ Case | — | — | — | — |
| Pressure sensor | PAC-PS01-E | 20 PC Pressure sensor | — | — | — | — |
| Flow sensor | PAC-FS01-E | 1 PC Flow sensor | — | — | — | — |
| Thermistor | PAC-TH011-E | | — | — | — | — |

| Parts name | Model name | Specification | ZUBADAN | | | | | PXZ-ecodan | |
|---|---|---|---|---|---|---|---|---|---|
| | | | PUD-SWM60VAA | PUD-SWM80VAA<br>PUD-SWM80YAA | PUD-SWM100VAA<br>PUD-SWM100YAA | PUD-SWM120VAA<br>PUD-SWM120YAA | PUD-SHWM140VAA<br>PUD-SHWM140YAA | PXZ-4F75VG | PXZ-5F85VG |
| Flow Temperature Controller | PAC-IF033B-E | 1 PC Board w/ Case | — | — | — | — | — | — | — |
| System controllers | PAC-IF071B-E | 1 PC Board w/ Case | — | — | — | — | — | — | — |
| | PAC-SIF051B-E | 1 PC Board w/ Case | — | — | — | — | — | — | — |
| Pressure sensor | PAC-PS01-E | 20 PC Pressure sensor | — | — | — | — | — | — | — |
| Flow sensor | PAC-FS01-E | 1 PC Flow sensor | — | — | — | — | — | — | — |
| Thermistor | PAC-TH011-E | | — | — | — | — | — | — | — |

CONTENTS

| Parts name | Model name | Contents | Q'ty |
|---|---|---|---|
| Air discharge guide | MAC-886SG-E | Air discharge guide | 1 |
| | | Screw | 4 |
| | PAC-SJ07SG-E | Air discharge guide | 1 |
| | | Support (For right and left) | 2 |
| | | Attachment screw(5×10) | 4 |
| | | Attachment screw(4×10) | 4 |
| | PAC-SG59SG-E | Air discharge guide | 1 |
| | | Attachment screw(5×35) | 4 |
| | | Spacer | 4 |
| | PAC-SH96SG-E | Air discharge guide | 1 |
| | | Support | 1 |
| | | Screw(5×15) | 12 |
| | | Washer | 12 |
| | | Spring washer | 12 |
| Air protection guide | PAC-SJ06AG-E | Air protect guide | 1 |
| | | Mounting screw (4×16) | 4 |
| | | Washer (for screw 4×16) | 4 |
| | | Spring washer | 4 |
| | PAC-SH63AG-E | Air guide | 1 |
| | | Mounting screw (5×15) | 4 |
| | | Washer | 4 |
| | | Spring washer | 4 |
| | PAC-SH95AG-E | Air guide | 1 |
| | | Mounting screw (5×15) | 6 |
| | | Washer | 6 |
| | | Spring washer | 6 |
| Drain socket | PAC-SG61DS-E | Drain socket | 1 |
| | | Drain cap (φ33) | 5 |
| | | Heat insulator | 3 |
| | | Band | 8 |
| | PAC-SJ08DS-E | Drain socket | 1 |
| Centralized drain pan | PAC-SG63DP-E | Centralized drain pan | 1 |
| | PAC-SG64DP-E | Centralized drain pan | 1 |
| | PAC-SH97DP-E | Centralized drain pan | 1 |
| | PAC-SJ83DP-E | Centralized drain pan | 1 |
| Control/Service tool | PAC-SK52ST | Control/Service Tool | 1 |
| Defrost Heater | MAC-642BH-U1 | Defrost heater (with 2-pin lead assembly) | 1 |
| | | Heater support | 1 |
| | | Cable tie | 1 |
| | | Cable clamp | 1 |
| | | Self drilling screw | 2 |
| | | Wiring diagram | 1 |
| | | Insulation | 1 |
| | | 3-pin lead assembly | 1 |
| Capacity step control interface | PAC-IF011B-E | PC Board | 1 |
| | | Case | 1 |
| | | Thermistor | 2 |
| Flow temperature controller | PAC-IF033B-E | PC Board | 1 |
| | | Case | 1 |
| | | Thermistor | 3 |
| | | Remote controller | 1 |
| | | Remote controller cable (5m) | 1 |
| System controllers | PAC-IF071B-E | PC Board | 1 |
| | | Case | 1 |
| | | Thermistor | 1 |
| | | Flow/Return water temp. thermistor | 1 |
| | | Remote controller | 1 |
| | | Remote controller cable (10m) | 1 |
| | | SD memory card | 1 |
| | PAC-SIF051B-E | PC Board | 1 |
| | | Case | 1 |
| | | Thermistor | 1 |
| | | Flow/Return water temp thermistor | 1 |
| | | Remote controller cable (10m) | 1 |
| | | SD memory card | 1 |
| Thermistors | PAC-TH011-E | For zone (flow and return temp.) | 20[1)] |
| | PAC-TH011TK2-E | For tank temp. (5m) | 10[2)] |
| | PAC-TH011TKL2-E | For tank temp. (30m) | 5[3)] |
| | PAC-TH012HT-E | For boiler and buffer (5m) | 10[2)] |
| | PAC-TH012HTL-E | For boiler and buffer (30m) | 5[3)] |

# 1 Optional parts list

| Parts name | Model name | Contents | Q'ty |
|---|---|---|---|
| 2 zone kit | PAC-TZ02-E | 2 zone kit | 1 |
| | | Flexible hose | 2 |
| | | Conversion joint | 2 |
| | | Gasket | 4 |
| Attachment | PAC-SJ82AT-E | Attachment | 2 |
| | | Mounting screw 5×15 | 8 |
| | | Washer | 8 |
| | | Spring washer | 8 |
| Wi-Fi interface | MAC-587IF-E | Interface unit (with connecting cable) | 1 |
| | | Fixing screw 3.5×16 mm | 2 |
| | | Fixing screw 4×16 mm | 1 |
| | | Mounting cord clamp | 1 |
| | | Fastener (for bundling the wires) | 1 |
| | | Holder | 1 |
| | | Clip | 1 |
| Pressure sensor | PAC-PS01-E | Pressure sensor | 20 |
| Flow sensor | PAC-FS01-E | Flow sensor body | 1 |
| | | Flow sensor cable | 1 |
| | | O-ring | 2 |
| Expansion vessel kit | PAC-EVP12-E1 | Expansion vessel 12L | 1 |
| | | 5 bar pressure relief valve | 1 |
| Drain hose heater connecter | MAC-061RA-E | Terminal bed | 1 |
| | | Screw (4×12) | 2 |
| | | Lead wire with connector (3 PIN) for SUZ-SWM30/40/60VA* (-SC) | 1 |
| | | Lead wire with connector (2 PIN) for SUZ-SWM80/100VA* | 1 |
| | MAC-062RA-E | Terminal bed | 1 |
| | | Lead wire with connector | 1 |
| | | Screw (4×25) | 1 |
| Muffler | MAC-001MF-E | Muffler | 1 |
| | | Flare nut | 2 |
| | | Pipe cover (EPT) | 2 |
| | | Pipe cover | 2 |
| Joint pipe and nut | MAC-001FN-E | Joint pipe | 1 |
| | | Flare nut | 1 |

Notes:
1) Two thermistors per package; 10 packages per carton
2) One thermistors per package; 10 packages per carton
3) One thermistors per package; 5 packages per carton

MITSUBISHI ELECTRIC

ecodan

Wireless Remote Controller and Receiver

# PAR-WT60R-E
# PAR-WR61R-E

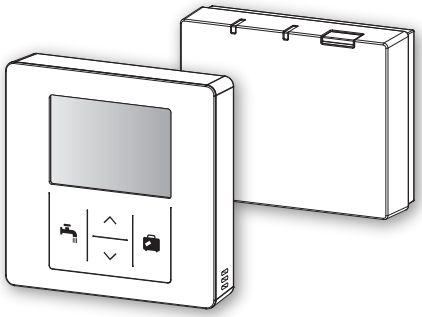

**This manual explains installation of the PAR-WR61R-E wireless receiver and the PAR-WT60R-E wireless remote controller, and settings of these devices. Before installing the devices, read this manual thoroughly. After reading, be sure to hand this manual to the user.**

## 1. Safety precautions

- The precautions mentioned below are important to use the device safely. Be sure to understand and follow them.
- The following hazardous classification shows the likelihood and severity of hazards if a person does not follow the instructions contained on the following signs.

| | |
|---|---|
| ⚠ Warning | Indicates a hazardous situation which, if a person does not follow the instructions, could result in death or serious injury. |
| ⚠ Caution | Indicates a potentially hazardous situation that, if a person does not follow the instructions, may result in bodily injury or property damage. |

| ⚠ Warning | |
|---|---|
| **►Installation** | |
| Do not use the device in particular environments. | Do not use the device in particular environments where the following substances are present in large amounts: oil, vapour, organic solvent, corrosive gas (such as ammonia, sulphuric compounds, and acid or the like), or where acid or alkali solution, or particular sprays are used frequently. This could affect operating performance, or cause corrosion, which could result in electrical shock, breakdown, smoke generation, or fire. |
| Do not place the devices in an environment where flammable gas may occur, stay, flow in, or leak. | Build-up of flammable gas could result in fire or explosion. |
| The device must be installed by a dealer or an authorised technician according to the appropriate installation manual. | If the device is installed improperly, electric shock or fire could result. |
| Do not place the device in an environment that exposes it to large amounts of vapor or condensation. | Electric shock, fire, or breakdown could result. |
| **►Wiring** | |
| The wireless receiver's maximum voltage is 12V DC. Do not connect 230V AC power source to the wireless receiver. | Breakdown, ignition, or fire could result. |
| Connections must be made securely and without tension or external force on the terminals. | If connections are made improperly, breaking of wire, heat generation, or fire could result. |
| **►Others** | |
| Do not use sharp objects to press the buttons. | Electric shock or breakdown may result. |
| Do not touch or operate the device with wet hands. | Electric shock or breakdown may result. |
| Do not wash the device with water or solution or the like. | Electric shock or breakdown may result. |
| When installing or repairing the device, ask a dealer or a qualified technician. | If the device is not installed properly, electric shock, smoke generation, or fire could result from entry of dust or water. |
| Do not disassemble or modify. | |

| ⚠ Caution | |
|---|---|
| Do not drop the device. | This could break the case or affect the device enough to make it inoperable. |
| Install the device in a place capable of bearing its own weight . | If the device is not installed securely or properly, the wireless receiver may fall. |

■ **Disposal**

**This symbol mark is for EU countries only.**

**This symbol mark is according to the directive 2002/96/EC Article 10 Information for users and Annex IV, and/or to the directive 2006/66/EC Article 20 Information for end-users and Annex II.**
Your MITSUBISHI ELECTRIC product is designed and manufactured with high quality materials and components which can be recycled and/or reused. This symbol means that electrical and electronic equipment, batteries and accumulators, at their end-of-life, should be disposed of separately from your household waste. If a chemical symbol is printed beneath the symbol, this chemical symbol means that the battery or accumulator contains a heavy metal at a certain concentration.
This will be indicated as follows: Hg: mercury (0.0005%), Cd; cadmium (0.002 %), Pb: lead (0.004%)
In the European Union there are separate collection systems for used electrical and electronic products, batteries and accumulators.
Please, dispose of this equipment, batteries and accumulators correctly at your local community waste collection/recycling centre.
Please, help us to conserve the environment we live in!

## 2. Accessories and installation tool

The following items are included in the box.

| Part name | No. |
|---|---|
| ① Wireless receiver <PAR-WR61R-E> (2 m long cable included) | 1 |
| ② Bracket | 1 |
| ③ Flat head screw (4.1 × 6) | 4 |
| ④ Installation and setting manual | 1 |

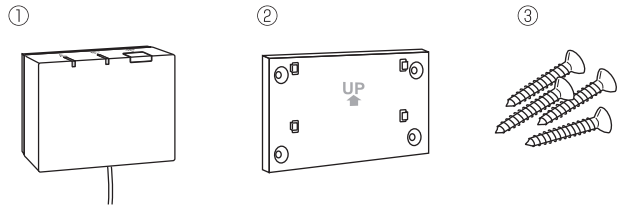


* Installing of the devices requires a Phillips-head screwdriver (No.2 6 mm).

■ **How to read the year of manufacture**

The year of manufacture is indicated on the wireless remote controller and receiver as below.

L * * * * * * S □ □ * * * * * *

Month of manufacture : 1,2,3,4,5,6,7,8,9,X(10),Y(11),Z(12)
Year of manufacture (western calendar) 2=2022, 3=2023

## 3. Before using ATW wireless system

**Following is the summary of the procedure for installing and setting the wireless system.**

**1. Devices and manuals required to set and install the wireless system**

① PAR-WT60R-E wireless remote controller
② PAR-WR61R-E wireless receiver
③ ATW wireless system installation and setting manual (this manual)
④ Wireless remote controller operation manual (hereinafter abbreviated as OM)
⑤ Ecodan system installation manual (hereinafter abbreviated as IM)

**2. Installing and setting procedure**

① Power off the ecodan system.
② Install the wireless receiver on the ecodan system.
(See "4. Installing the Wireless Receiver" in this manual.)

**When installing the wireless receiver, be sure to set the SW1-8 on the control board to ON. (See “5.1 DIP Switch Functions” in IM. )**

③ Power on the ecodan system, and the LEDs will blink on the receiver for 3 seconds.
④ Place two AA alkaline batteries in the wireless remote controller.
(See “·Batteries” in “4. Before Operation” in OM.)
⑤ Perform pairing process between the wireless receiver and the remote controller.
(See "5. Pairing process” in this manual.)

**The wireless receiver does not go through a pairing process unless the ecodan system is off. When the system is ON, be sure to turn it off before beginning the pairing process.**

⑥ Test wireless communication between the wireless remote controller and the wireless receiver.
(See “6.4 Communication Test” in “6. Setting wireless remote controllers” in this manual.)

⑦ Position the wireless remote controller in an appropriate place.
(See "4. Before Operation" in OM.)

⑧ To set the wireless remote controller as a room sensor that monitors room temperature, see "Main remote controller Options" in IM.

⑨ Use the main controller to set the ecodan system to the room temp. ( ) mode.
When the flow temp. ( ) mode or the compensation curve ( ) mode is selected, the wireless remote controller will operate as a thermostat. (See “Main remote controller” in IM.)

**When the remote controller set as a room sensor runs out of battery or gets a communication error during room temp. mode, the room temp. mode will automatically switch to the compensation curve mode.**
**The room temp. mode will be restored by battery replacement or solution of communication error.**

**Installation and setting of the wireless remote controller is complete. To set additional wireless remote controllers, repeat Step ④ to ⑧.**

## 4. Installing Wireless Receiver

### 4.1. Connecting to Cylinder unit

*** Before installation, be sure to turn off the main power supply.**

① Remove the two screws that hold the front panel, and remove the panel.
② Remove the screw and pull the control and electrical box so that the control and electrical box is swung toward you from left.

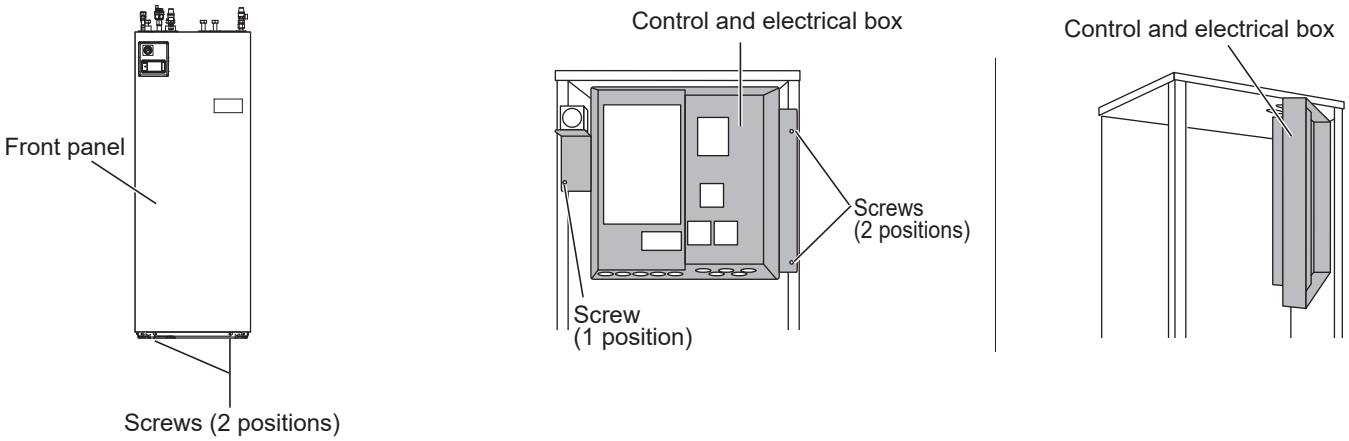


**If the removed front panel is set aside away from the indoor unit, ensure the relay connector on Main remote controller is disconnected.**

③ Run the receiver's cable into the cylinder unit through the inlet as shown on the figure.

**Do not run the receiver's cable through an inlet that a power cable goes through and do not bundle the cable together with a power cable.**

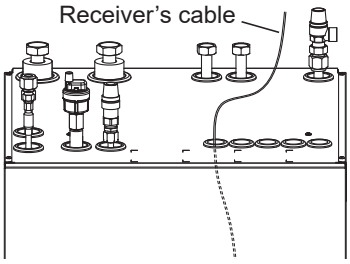


④ Route the cable out the back of the control and electrical box, and run the cable into the box through the shown inlet in the underside of the box.

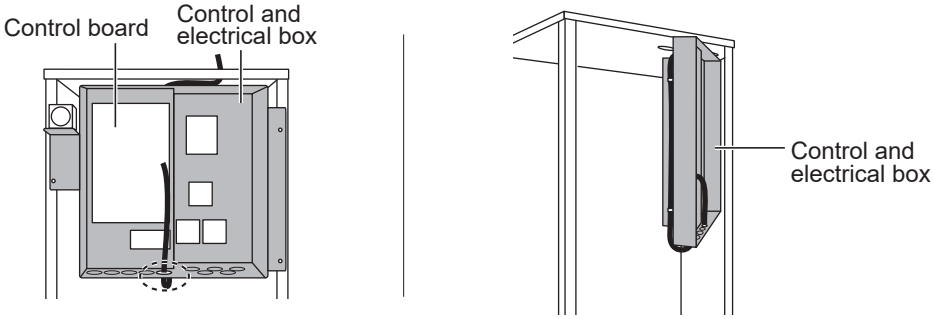


⑤ Connect the cable connector to the CNRF terminal on the control board. Switch ON SW1-8.

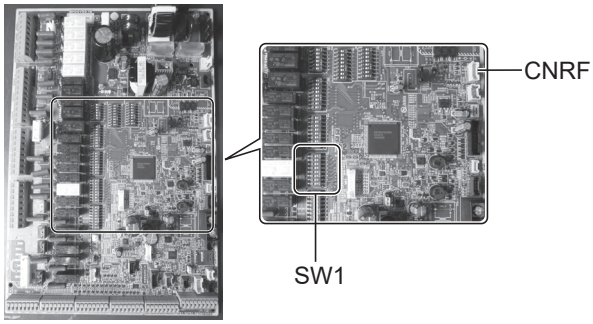


⑥ Remove excessive slack on the cable , then secure the cable with a cable fastener and 2 cable straps on the upper side and center on the back of control and electrical box.

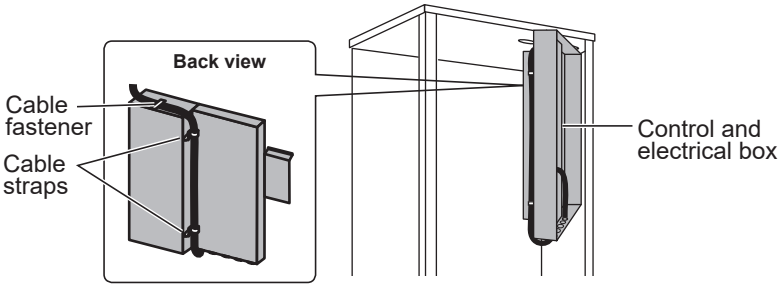

⑦Place the control and electrical box back in the original position and reinstall the 3 screws.

⑧ Check the maximum reach of the cable and install the bracket on the wall with screws.

**Do not excessively pull the cable when checking the maximum reach.**

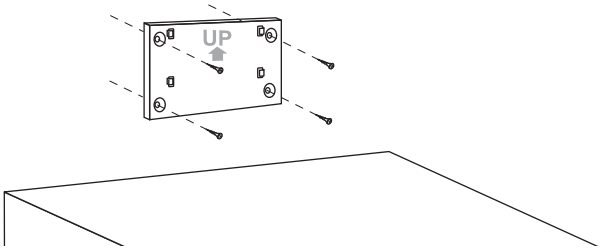


**<Notice>**
- **Do not overtighten the screws.**
  ►The bracket may deform or break.
- **When installing the bracket, select an interference-free space.**
  ►Keep the installing area at least 10 cm away from metal or a wall box. If unable to do so, always place the room wireless remote controllers in locations where the communication test determines that the wireless remote controllers are fully capable of communication with the wireless receiver.
- **Do not install the bracket with screws on the exterior casing of the cylinder unit.**
  ►The internal parts may be damaged, which could result in breakdown of the indoor unit.
- **Do not install the bracket where the receiver could be exposed to moisture or leaked water from piping connections above.**
  ►The wireless receiver subjected to moisture or leaked water could cause electric shock, fire, or its breakdown.

⑨ Place the wireless receiver on the fixed bracket.
Hook the holes on the back of the wireless receiver onto the projections on the bracket, and fix the wireless receiver in place.

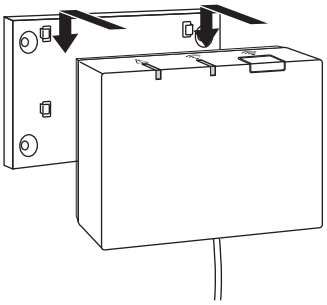

**<Notice>**
- **Do not place the wireless receiver inside the cylinder unit.**
  ►Both the wireless receiver and its wire may break due to heat inside the indoor unit.
- **Do not let the wireless receiver stand on top of the cylinder unit. Always fix the wireless receiver onto the bracket.**
  ►Wireless communication performance may be affected.
- **Do not pull the cable excessively.**
  ►Breakdown, ignition, or fire may result.
- **Do not have the wireless receiver suspended.**
  ►Breakdown, ignition, or fire may result.

⑩ Fix the front panel with screws.

## 4.2. Connecting to Hydrobox

*** Before installation, be sure to turn off the main power supply.**

① Remove the two screws that hold the front panel, and remove the panel.

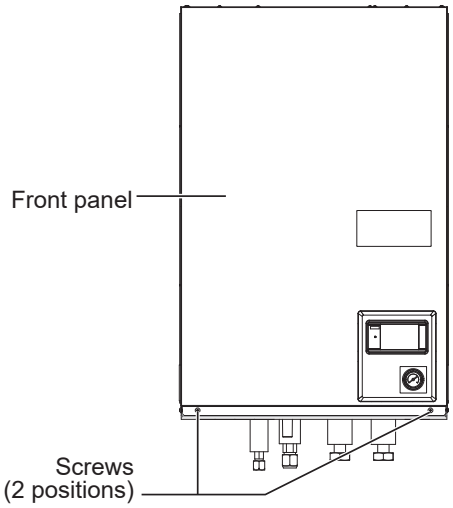


② Route the receiver's cable into the hydrobox through the leftmost inlet at the bottom of the unit. Then route into the control and electrical box through the shown inlet at the bottom of the control and electrical box.

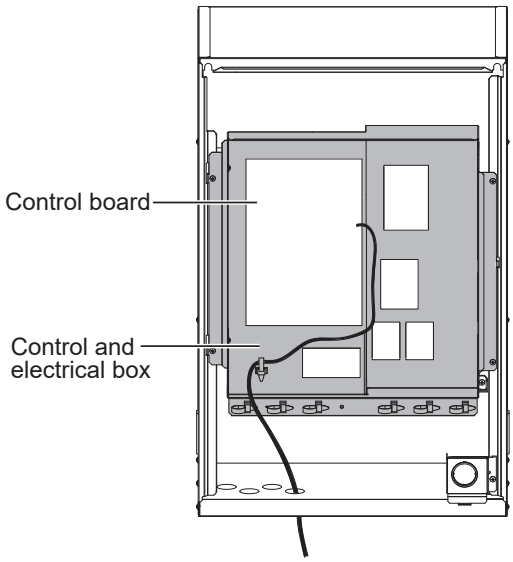


- **Do not bundle the receiver cable with a power cable.**
- **Do not run the cable through an inlet that a power cable goes through.**

Refer to ⑤, ⑦, and ⑧ in "4.1. Connecting to Cylinder unit" in this manual for the procedures ③ and ④.

**When installing the wireless receiver, observe the following.**

- Keep the other electric or electronic devices (e.g. radio, induction heating cooker, microwave oven, refrigerator, and mobile phone or the like) at least 50 cm away from the wireless receiver.
- Place the wireless receiver in an interference-free area and keep the wireless receiver away from metal.

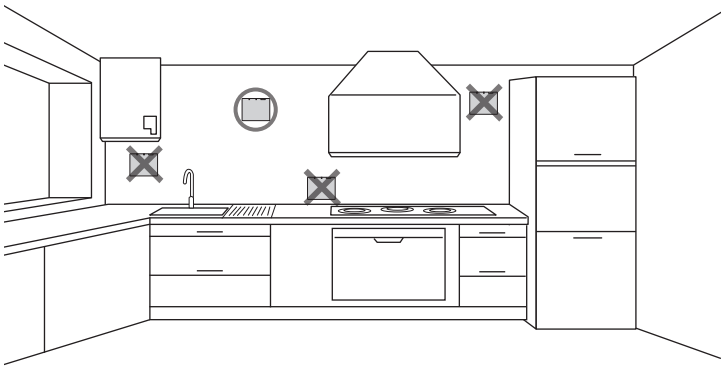

Refer to ⑨ and ⑩ in "4.1. Connecting to Cylinder unit" in this manual for the procedures ⑤ and ⑥.

## 5. Pairing process

- **If the wireless remote controller is not paired, the indoor unit cannot be operated using the remote controller.**
- **Before using the wireless remote controllers, always ensure to go through a pairing process.**
- **Pairing is NOT possible unless the ecodan system is off. When the ecodan system is ON, be sure to turn it off before starting the pairing process.**
- **The wireless receiver is also needed for pairing, so please make sure to operate the wireless remote controller near the wireless receiver.**
- **Do not pair multiple wireless remote controllers with the receiver at the same time.**

● When the remote controller operating, be sure to touch the buttons with your fingers or Stylus pen.
►The operation panel may not work properly in the following cases.
* The operation panel or your finger is wet or dirty.
* The operation panel is touched with a gloved finger or a finger with a bandage.
* The operation panel is touched with a sharp-pointed instrument.
If the operation panel does not respond to touch on the screen, release your finger from the screen and touch it again.

Touching the screen again without pause may result in false detection. Touching on the screen strongly does not enhance the detection sensitivity.

The response of operation panel depends on the ambient temperature and humidity, physical condition of the user, and operating conditions of the electric appliances.



①Press button on the wireless receiver for 3 seconds or more until orange ⚠ LED blinks.

The pairing mode is cancelled by pressing button.

<Reciever Top view>

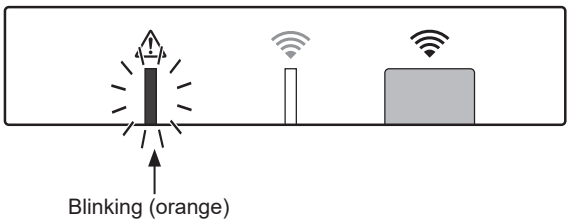


② Touch, and buttons simultaneously for at least 3 seconds until the mode number blinks.

<Remote controller Display>

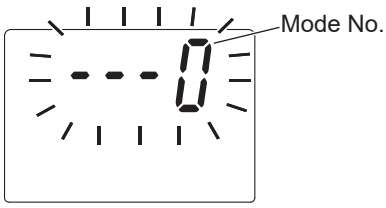


③ Touch or button to set the mode number to “1” and touch button.

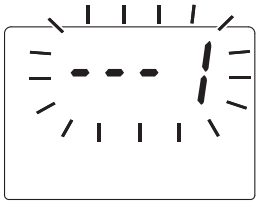

④ When button is touched in the middle of setting, the screen returns to the previous indication.

**When appears on the display, do not perform pairing. The power may be turned off in the middle of pairing, which may lose the pairing information.**

⑤ Touch or button to select a pairing address, and touch button to set the address.
" " (no setting) is displayed initially. Choose a number from 1 to 8.

After touching button, the wireless remote controller starts communication with the wireless receiver.

**When using multiple wireless remote controllers in one ecodan system, be sure to set different address for each remote controller.**

⑥ When the pairing process has been successfully performed, "ok" is shown on the remote controller and green LED steadily lights on the wireless receiver.

When "Err" appears on the remote controller and green LED on the wireless receiver blinks , correctly repeat the same process from step 5.

Even if the pairing process failed, the wireless receiver stays in the pairing mode for 5 minutes unless cancelled.

<Pairing is successful>

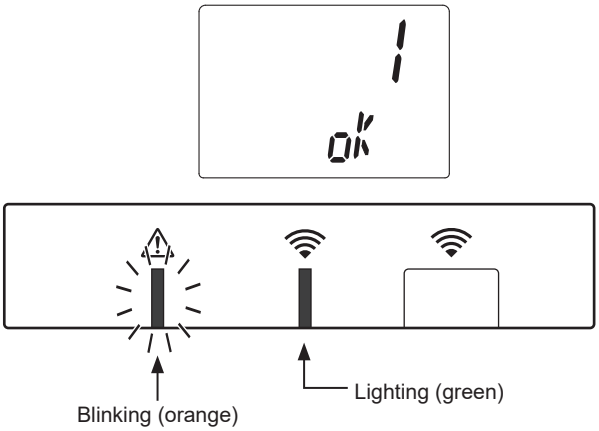


<Pairing is unsuccessful>

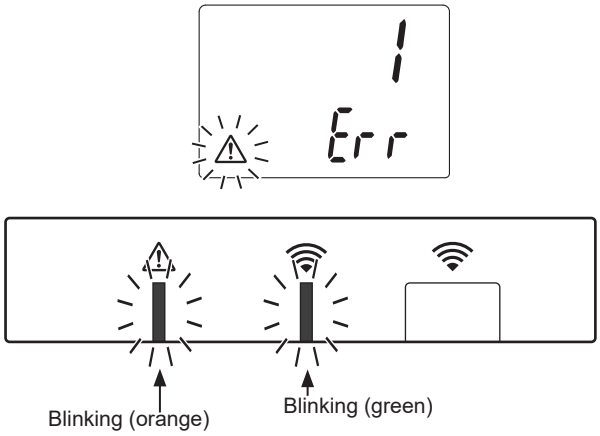


**<<Main causes that prevent successful pairing>>**

- **The wireless receiver does not enter the pairing mode.**
  ►Press button for 3 seconds or more until orange LED blinks.
  Make sure to turn off the ecodan system by main controller.
- **Pairing is attempted outside the transmission range of the wireless receiver.**
  ►Adjust the distance between the wireless receiver and remote controller, and so try again.
  If the distance is excessively short, pairing may fail. Keep the distance of about 50 cm.
- **The wireless remote controller has been already paired with the wireless receiver.**
  ►The pairing address assigned to a wireless remote controller cannot be changed by remote controller. Use the wireless receiver to reset pairing information. (Refer to “(3) Resetting pairing information” in “7.3. Wireless Receiver Functions”.)

**Even when power fails or when the batteries run down, the pairing information will be kept.**

## 6. Setting wireless remote controllers

① Touch, and buttons simultaneously for at least 3 seconds until the mode number blinks.

② Touch or button to choose a mode number.

③ Confirm setting by touching button.
The display stops blinking and lights steadily.

When button is touched in the middle of setting, the screen returns to the previous indication.

<Remote controller Display>

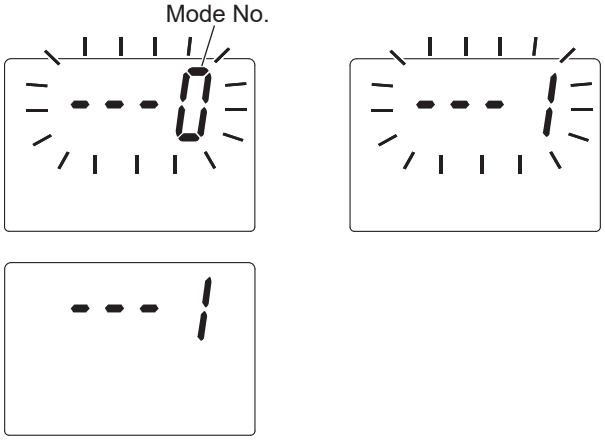


| Mode No. | Names | Functions | Initial settings |
|---|---|---|---|
| 0 | Pairing address display | To view the own pairing address of the wireless remote controller. | |
| 1 | Pairing | To perform a pairing process with the wireless receiver. | |
| 2 | Temperature unit | To select °C or °F. | °C |
| 3 | Communication test | Communication test with the wireless receiver. | |
| 4 | Room temperature display | Actual room temperature display | ON |
| 5 | Automatic zone no. display | To enable or disable automatic zone no. display. | OFF |

### 6.1. Viewing Address Number (Mode No. 0)

Set the mode no. to “0”.

The display to the right shows that the address is set to “2”.

<Remote controller Display>

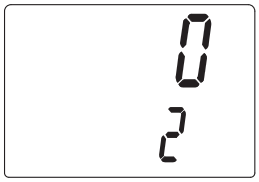

### 6.2. Pairing (Mode No. 1)

For details, refer to “5. Pairing process”.

### 6.3. Selecting the Temperature Unit (Mode No. 2)

Set the mode no. to “2”.
The temperature reading can be selected between Celsius (°C) or Fahrenheit (°F).

Touch or button to select °C or °F and touch button to confirm the selection.

<Remote controller Display>

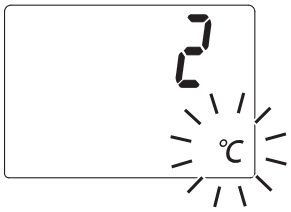

## 6.4. Communication Test (Mode No. 3)

Set the mode no. to “3”.
Communication test is performed between the wireless remote controller and the wireless receiver.

When the display shows "ok", this indicates that the communication between the remote controller and the receiver is established.
If "Err" is shown, the wireless remote controller is not communicating with the wireless receiver.

Do not leave the wireless remote controller in a location where the communication test results in "Err".

**Before conducting the communication test, ensure that the wireless remote controller goes through a pairing process.**
**Do not conduct the communication test on multiple remote controllers at the same time.**

## 6.5. Displaying or Hiding Room Temperature (Mode No. 4)

Set the mode no. to “4”.
Select either displaying or hiding the room temperature.

Touch ⌃ or ⌄ button to select displaying or hiding the room temperature, and touch button to save the setting.

**Hiding** :" - - - ".
**Displaying** :Actual room temperature is displayed

When the indoor unit is operating, the room temperature display shows the actual room temperature (18°C) above and the set temperature (20°C) below as shown in the figure to the right. The measurable temperature range is from 0°C to 40°C.

**If the measured room temperature is out of 0°C to 40°C range, the room temperature display blinks.**

<Remote controller Display>

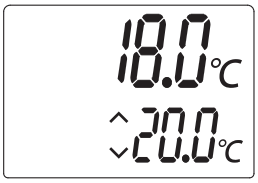


**When the wireless remote controller is installed on a bracket, room temperature might not be accurate being affected by the wall temperature.**
**Perform a test run and place the remote controller where the room temperature can be correctly detected.**

## 6.6. Automatic Zone No. Display (Mode No. 5)

Set the mode no. to “5”.
When the automatic zone no. display is active, a zone number assigned to the remote controller is displayed for 3 seconds after temperature setting.
Touch ⌃ or ⌄ button to select between "- - -" and z1 or z2, and touch button to save setting.

**Inactive** :"- - -".
**Active** :The zone no. (z1 or z2) assigned to the remote controller is shown.

# 7. Wireless Receiver Operation

The wireless receiver is powered by indoor unit. It communicates with the wireless remote controller(s), and transmits to the indoor unit the operation status and commands received from the wireless remote controlle(s). The wireless receiver has two modes available: pairing mode and pairing reset mode.

## 7.1. Functions of Buttons and Displays

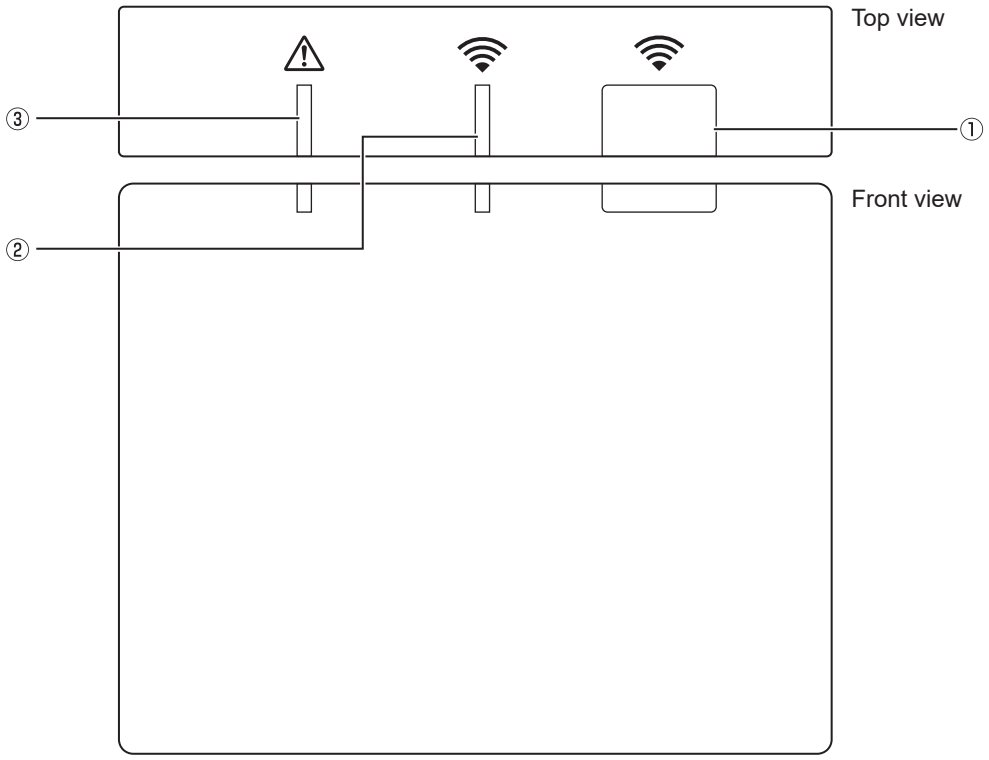


| Number | Item | Description |
|---|---|---|
| ① | Setting button | To switch operating mode. |
| ② | Communication LED (green) | To indicate that the wireless receiver is communicating. |
| ③ | Operation LED (orange) | To show operating status of the wireless receiver. |

The following table shows the operating and illuminating status of the LEDs.

| Operation LED (orange) | Communication LED (green) | Description |
|---|---|---|
| Blinking | Blinking | Power is ON (for 3 seconds). |
| Off | Off | Normal mode: Not paired |
| Off | On | Normal mode: Paired |
| Off | Blinking | Normal mode: Communicating |
| Blinking | Off | Performing a pairing process |
| Blinking | On | Pairing: Successful |
| Blinking | Blinking | Pairing: Unsuccessful |
| On | On | Pairing information is cleared. |

### 7.2. Turning on Power

When the wireless receiver is powered by indoor unit after installation, green LED and orange LED blink for 3 seconds.

Power ON

### 7.3. Wireless Receiver Functions

**(1) Normal mode**

When the wireless receiver is paired with a wireless remote controller, green LED comes on. When the wireless receiver is communicating with a wireless remote controller, green LED blinks.

Not paired

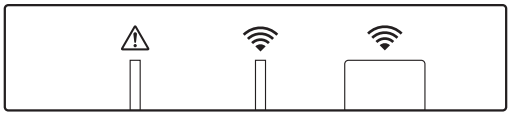

Paired

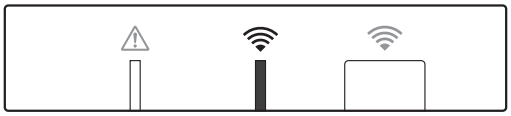

Transmitting

**(2) Pairing mode**

For details, refer to “5. Pairing process” in this manual.

**(3) Resetting pairing information**

**Once pairing information has been cleared, ALL the wireless remote controllers need go through a pairing process again.**

Press button for 5 seconds or more until and LED light while pairing mode is active. All the pairing information is cleared.

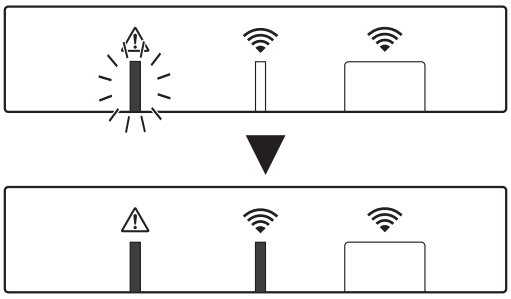

## 8. Specifications

| Item | Description |
|---|---|
| Power source | 12V DC (powered by indoor unit) |
| Operating temperature and humidity requirements | Temperature: 0 to 40°C<br>Humidity 30 to 90%RH (No condensation) |
| Weight | 150 g (excluding a cable) |
| Dimension (W×H×D) | 100 mm × 80 mm × 30 mm |
| Transmitter power level (MAX) | 10 dBm |
| Frequency | 868.3 MHz |

## 9. FAQ

| *Questions* | *Answers* |
|---|---|
| How many wireless remote controllers are allowed to be paired? | Up to 8 controllers. |
| What should be noted about Pairing? | • The same address cannot be assigned to multiple remote controllers<br>• If the same address is assigned to multiple controllers, the address can be assigned to only the last paired remote controller.<br>• Once the remote controller is paired, its pairing address cannot be changed by remote controller. Use the wireless receiver to reset pairing information. |
| What causes a communication error between the wireless remote controller and wireless receiver? | Check the following possible causes.<br>• The batteries on the wireless remote controller are running out.<br>• The transmitted signal does not reach the wireless receiver.<br>• The wireless remote controller is not paired. |
| What measures should be taken when the room temp. display indicates “1” with ⚠ and LED light blinks? | The indoor unit or outdoor unit has a failure. Refer to the indications on the main controller and take appropriate measures. Please also check installation and service manuals for the indoor unit. |
| What measures should be taken when the room temp. display indicates “2” with ⚠ and LED light blinks? | The thermistor inside the wireless remote controller has a failure. Check the resistance of the thermistor. (When the room temperature is between 0 and 40°C, the resistance must be between 5 and 28 kΩ.) |
| What measures should be taken when the room temp. display indicates “3” with ⚠ and LED light blinks? | A communication error occurs between the wireless remote controller and the wireless receiver. Check the following possible causes.<br>• The signal that is transmitted by the wireless remote controller does not reach the wireless receiver.<br>• The wireless remote controller is not paired. |
| What measures should be taken when the room temp. display indicates “4” with ⚠ and LED light blinks? | A communication error occurs between the wireless receiver and the indoor unit. Check the following possible causes.<br>• The cable connecting between the wireless receiver and the indoor unit has severed.<br>• The wireless receiver is not correctly connected to the indoor unit. |
| What measures should be taken when the room temp. display indicates “E” with ⚠ and LED light blinks? | Backup heater is running due to a failure of the indoor unit or the outdoor unit.<br>Check the error code displayed on the main controller and take appropriate measures accordingly.<br>The holiday mode is NOT available during backup heater only operation. |

MITSUBISHI ELECTRIC

# ATW/BTW UNIT OPTIONAL PARTS IMMERSION HEATER (1Ph 1/3kW) PAC-IH01V2-E / PAC-IH03V2-E

## INSTALLATION MANUAL

- Before starting installation, read the following description together with the installation manual included with the ATW/BTW unit.
- Please read carefully and observe fully the following safety precautions.

| ⚠ WARNING | Precaution that must be observed to prevent injuries or death. |
|---|---|

- After installation carry out a test run to ensure correct operation, then explain operation method and safety precautions to the end user.
  Tell your customers to keep this installation manual together with the operation manual, and when they give or sell this machine to any other person include this installation manual and operation manual with it.

## ⚠ WARNING

- If the ATW/BTW unit has already been connected to the power supply ensure circuit breaker is off before carrying out electrical work.
- If the immersion heater is installed incorrectly or modified after installation by the user, water leakage, electric shock or fire may result.
- All electrical work should be performed by a qualified technician according to local regulations and the instructions given in this manual.
- The immersion heater must be powered by a dedicated power supply and the correct voltage and correctly sized circuit breakers must be used.
- Connections must be made securely and without tension on the terminals.
  The included component parts of the PAC-IH01V2-E / PAC-IH03V2-E IMMERSION HEATER (1Ph 1/3kW) shall be used only for the purposes indicated in the installation manual.

## Contents

| | Item | Piece |
|---|---|---|
| ① | Immersion heater | 1 |
| ② | Thermostat (High limit thermal cut-out) | 1 |
| ③ | Tab cover | 1 |
| ④ | Earth leakage breaker | 1 |
| ⑤ | Screw (4×25) | 2 |
| ⑥ | Relay | 1 |
| ⑦ | Screw (4×16) | 2 |
| ⑧ | Label (for Earth leakage breaker) | 1 |
| ⑨ | Label (for Relay) | 1 |
| ⑩ | Lead wire with connector | 1 |
| ⑪ | Lead wire (Red, 130mm) | 1 |
| ⑫ | Lead wire (Blue, 130mm) | 1 |
| ⑬ | Lead wire (Red, 1500mm) | 1 |
| ⑭ | Lead wire (Blue, 1500mm) | 1 |
| ⑮ | Water-proof cover | 1 |
| ⑯ | Water-proof seal (3x35x25) | 1 |
| ⑰ | Water-proof seal (3x40x25) | 1 |
| ⑱ | Band | 4 |
| ⑲ | Tool | 1 |
| ⑳ | Installation manual (This paper) | 1 |
| ㉑ | Fastener | 1 |
| ㉒ | Spec name plate | 1 |

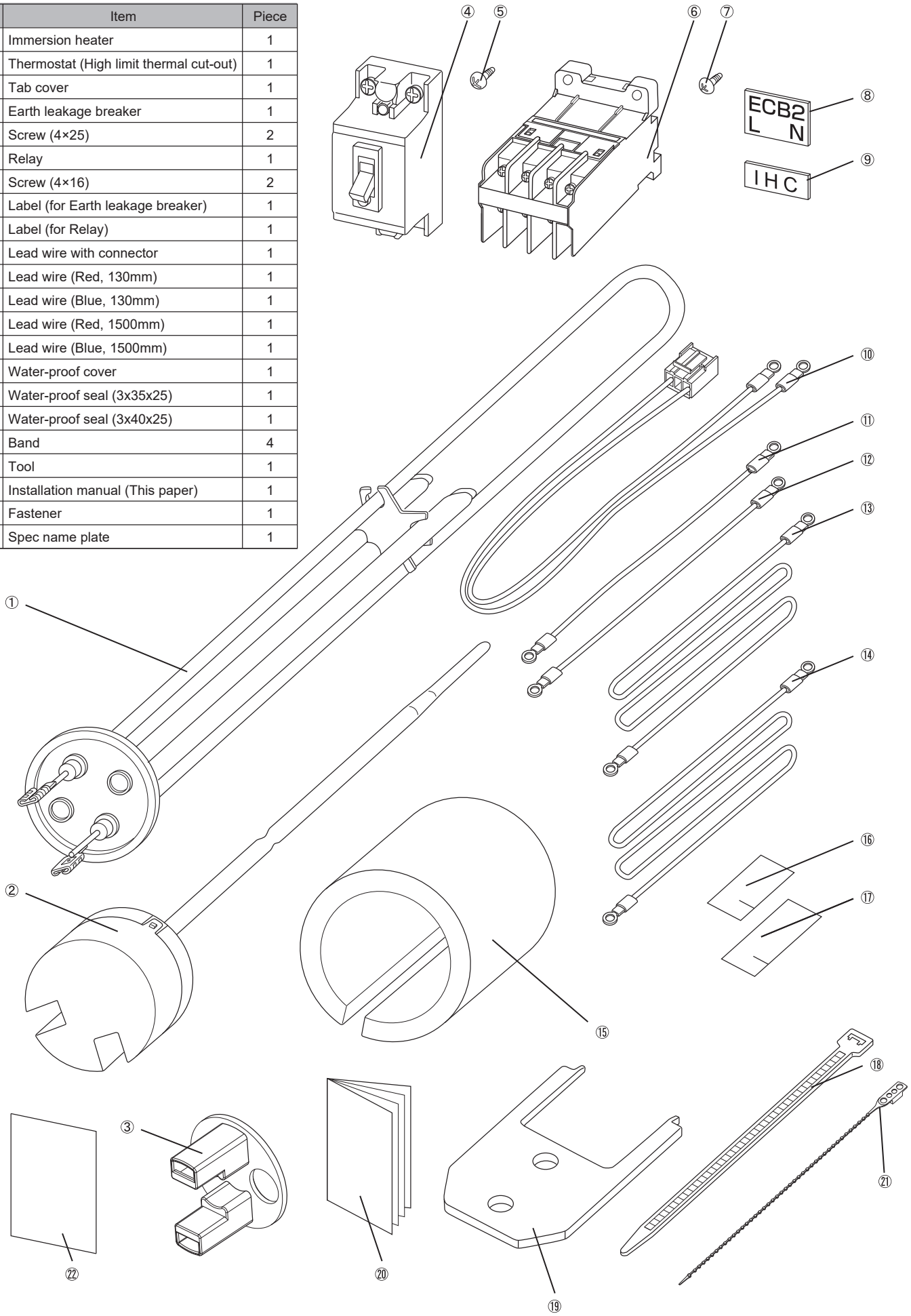

<ATW unit>

1

Refer to the installation manual of the ATW unit for the front panel removal.

Disconnect the relay connector connecting from the main remote controller under the electrical box. Remove the front panel.

2

Make sure that no water is in the tank before installing the immersion heater. Remove the back nut with the tool ⑲. Remove and dispose of the blanking plate and the gasket.

Dispose of the blanking plate and the gasket.

⑲

3

Adjust the position of the immersion heater so that the thermostat pockets are located at the upper right and lower left as shown in the figure. Fasten the back nut securely to prevent water leakage. (Recommended torque = 10 N•m)

①

⑲

4

Attach the tab cover ③ to the immersion heater. Insert the thermostat into the upper right thermostat pocket.
Position the terminals on the thermostat head at the bottom as shown in the figure.

③

②

Assemble ② and ③ securely.

5

④ ⑤ ⑥ ⑦

Fasten the earth leakage breaker and the relay on the electrical box as shown in the figure.

Screw positions

④ ⑥

Recommended torque = 1.5 N•m

6

⑧

ECB2
L N

Attach the label ⑧ on the electrical box. Place it above the earth leakage breaker ④ and align the vertical centers as shown in the figure.

④

⑨

IHC

⑥

Attach the label ⑨ on the electrical box. Place it above the relay ⑥ and align the vertical centers as shown in the figure.

7

Connector CNIH

⑩

8

A1

A2

⑩ ⑩

Recommended torque = 1 N•m

9

④

⑥

⑪ ⑫

⑬ ⑭

Recommended torque = 1.5 N•m

10

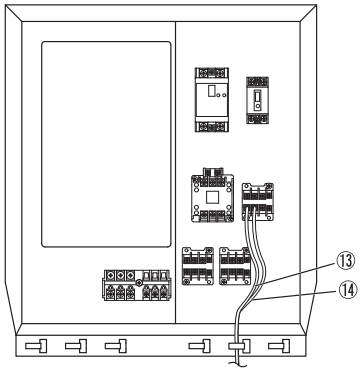


Do not bundle the lead wires ⑬ and ⑭ together with the low voltage wires, such as the main remote controller wires.

11

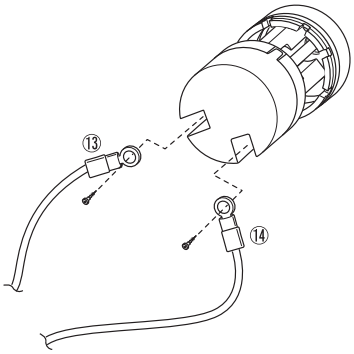


Recommended torque = 1.2 N•m

12

Attach the water-proof cover ⑮ as shown in the figure. Attach the water-proof seals ⑯ and ⑰ on the terminal screws to seal them while passing the lead wires ⑬ and ⑭ through the slits of the water-proof seals.

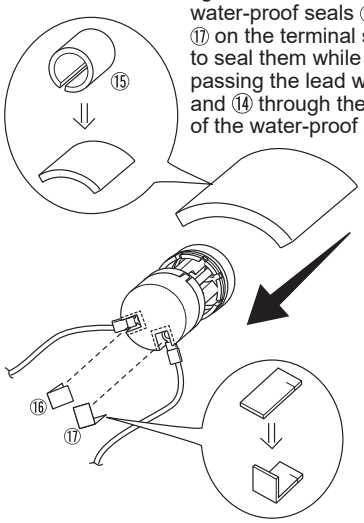


13

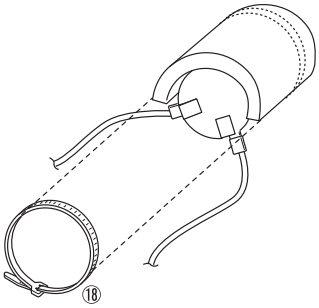


Fasten the water-proof cover ⑮ to the boss of the cylinder unit with the band ⑱.

14

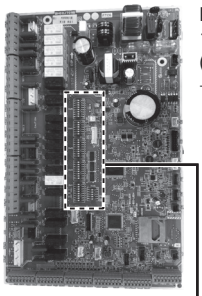

DIP Switch
1-4 OFF→ON
(without immersion heater
→with immersion heater)

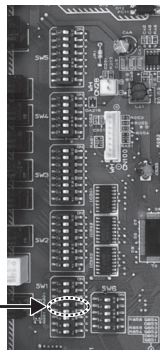

15

Fasten the lead wires with the bands ⑱ and the fastener ㉑ as shown in the figure.

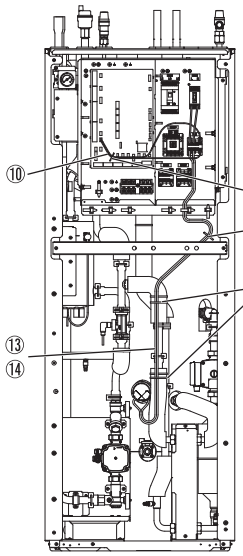


16

For details of wiring to the earth leakage breaker, refer to the installation manual and the wiring diagram of the ATW unit. Fill the tank with water and make sure that no water leaks around the immersion heater.

17

Attach the label ㉒. Do not cover or overlap the other labels.

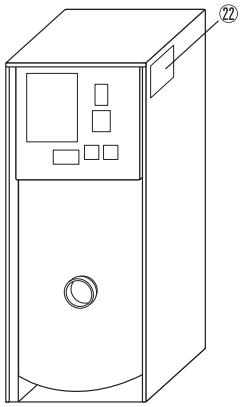


18

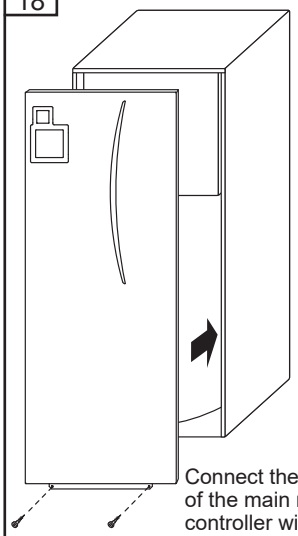

Refer to the installation manual of the ATW unit for the front panel installation.

Connect the relay connector of the main remote controller wires under the electrical box before installing the front panel.

<BTW unit>

1

Refer to the installation manual of the BTW unit for the front panel removal.

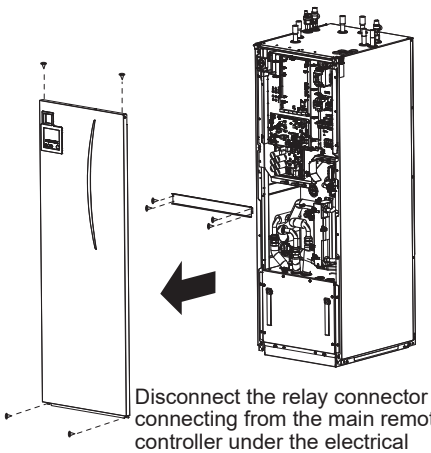

Disconnect the relay connector connecting from the main remote controller under the electrical box. Remove the front panel and the frame.

2

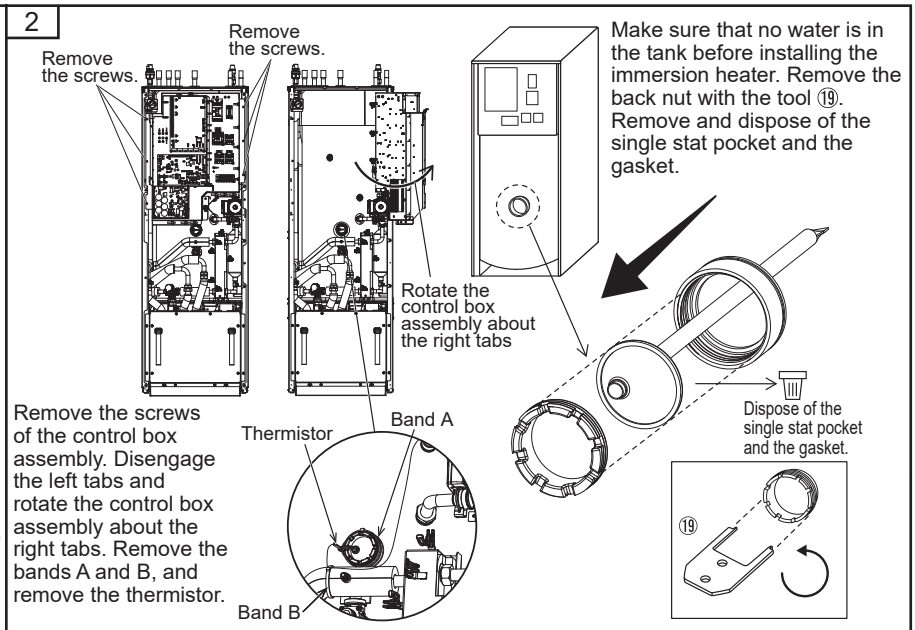


Make sure that no water is in the tank before installing the immersion heater. Remove the back nut with the tool ⑲. Remove and dispose of the single stat pocket and the gasket.

Remove the screws of the control box assembly. Disengage the left tabs and rotate the control box assembly about the right tabs. Remove the bands A and B, and remove the thermistor.

3

Adjust the position of the immersion heater so that the thermostat pockets are located at the upper right and lower left as shown in the figure. Fasten the back nut securely to prevent water leakage. (Recommended torque = 10 N•m)

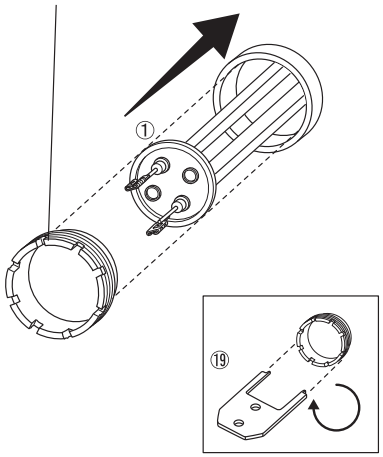


4

Attach the tab cover ③ to the immersion heater. Insert the thermostat into the upper right thermostat pocket.
Position the terminals on the thermostat head at the bottom as shown in the figure.

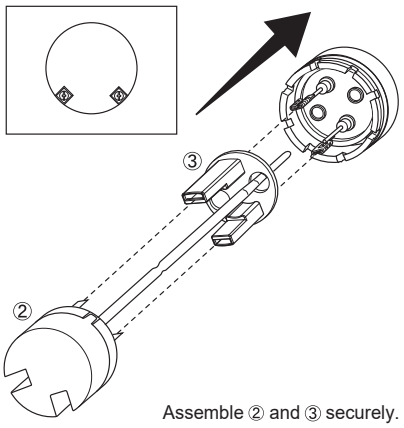


Assemble ② and ③ securely.

5

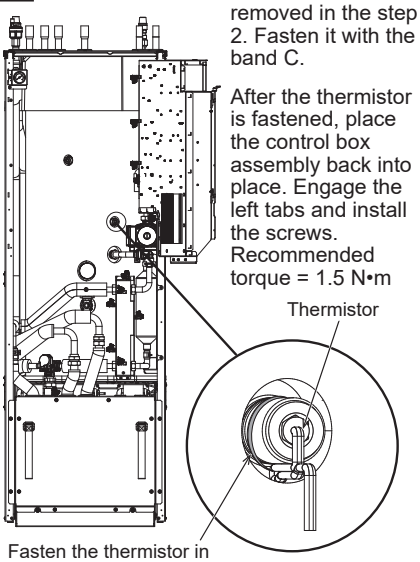


Mount the thermistor removed in the step 2. Fasten it with the band C.

After the thermistor is fastened, place the control box assembly back into place. Engage the left tabs and install the screws. Recommended torque = 1.5 N•m

Fasten the thermistor in the insertion opening with the band C.

6

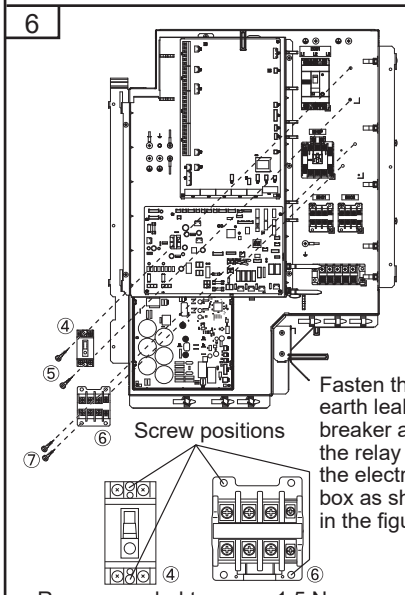


Fasten the earth leakage breaker and the relay on the electrical box as shown in the figure.

Recommended torque = 1.5 N•m

7

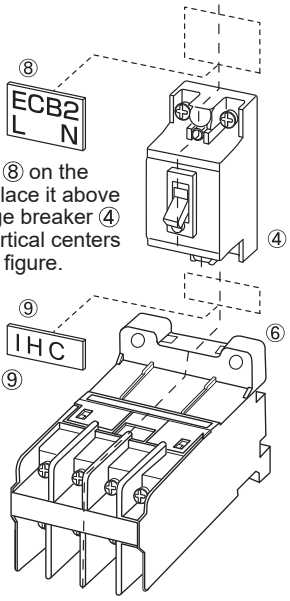


Attach the label ⑧ on the electrical box. Place it above the earth leakage breaker ④ and align the vertical centers as shown in the figure.

Attach the label ⑨ on the electrical box. Place it above the relay ⑥ and align the vertical centers as shown in the figure.

8

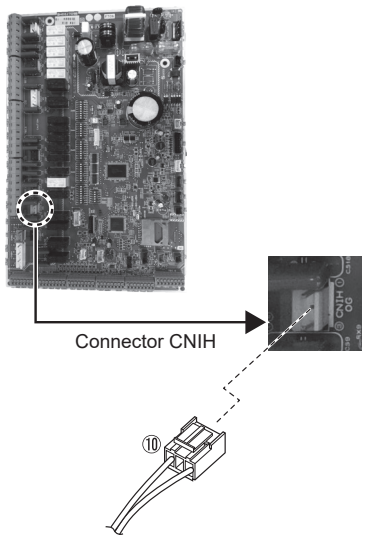


Optional parts

9

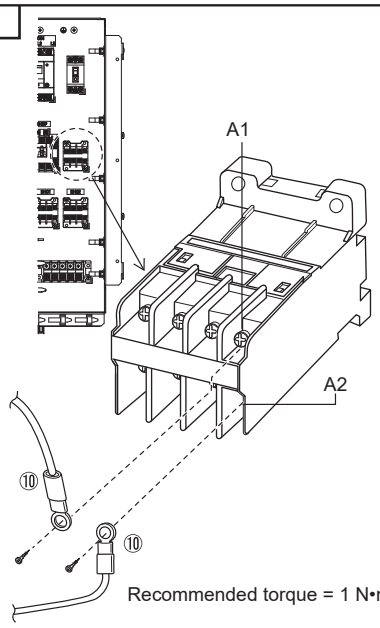


Recommended torque = 1 N•m

10

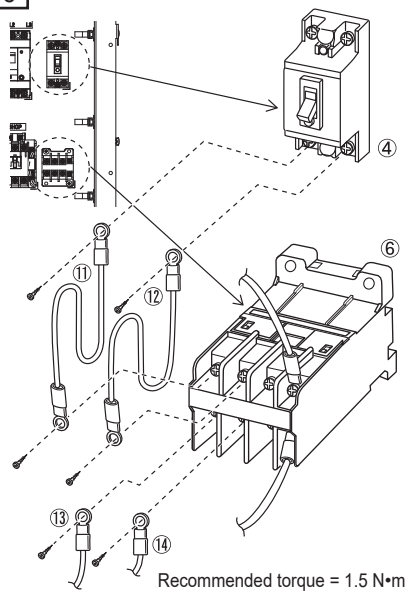


Recommended torque = 1.5 N•m

11

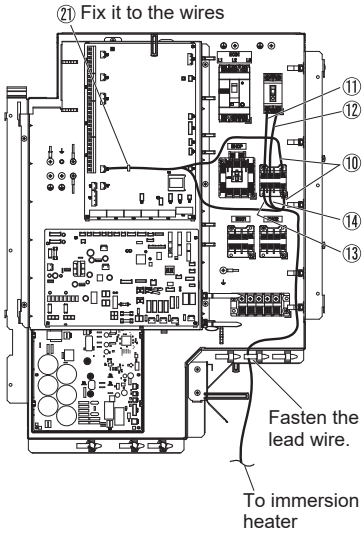


12

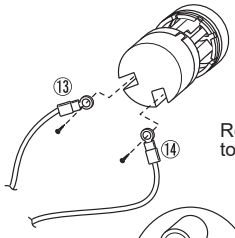


Recommended torque = 1.2 N•m

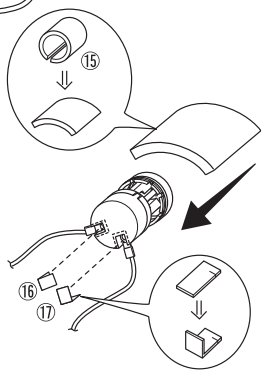


Attach the water-proof cover ⑮ as shown in the figure. Attach the water-proof seals ⑯ and ⑰ on the terminal screws to seal them while passing the lead wires ⑬ and ⑭ through the slits of the water-proof seals.

13

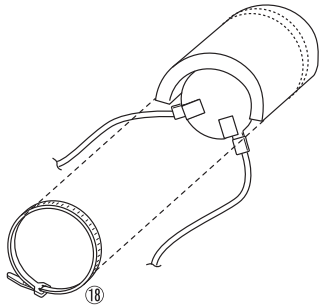


Fasten the water-proof cover ⑮ to the boss of the cylinder unit with the band ⑱.

14

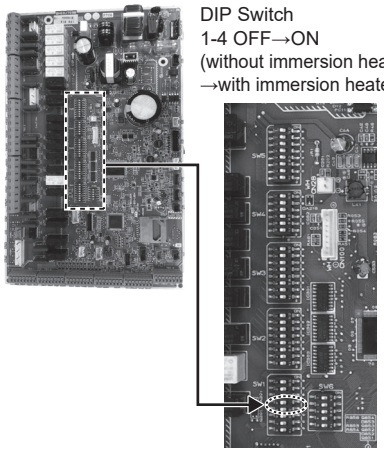

DIP Switch
1-4 OFF→ON
(without immersion heater
→with immersion heater)

15

For details of wiring to the earth leakage breaker, refer to the installation manual and the wiring diagram of the BTW unit. Fill the tank with water and make sure that no water leaks around the immersion heater.

16

Attach the label ㉒. Do not cover or overlap the other labels.

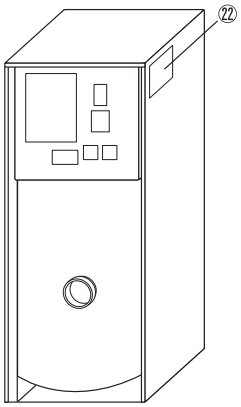


17

Assemble in the reverse order of the step 1.
Recommended torque for the frame = 1.5 N•m
Recommended torque for the front panel = 3 N•m

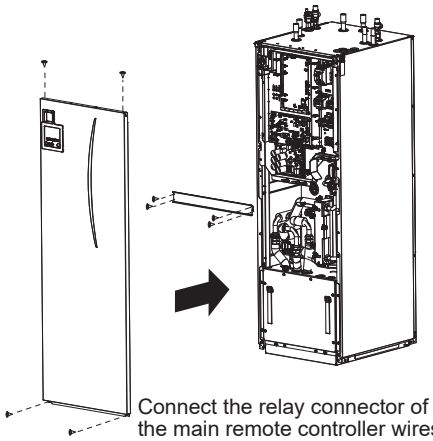

Connect the relay connector of the main remote controller wires under the electrical box before installing the front panel.

MITSUBISHI ELECTRIC

# CYLINDER UNIT OPTIONAL PARTS EHPT ACCESSORIES for UK PAC-WK02UK-E

## INSTALLATION MANUAL

- Before starting installation, read the following description together with the installation manual included with the cylinder unit.
- Please read carefully and observe fully the following safety precautions.

| ⚠ WARNING | Precautions that must be observed to prevent injuries or death. |
|---|---|

- After installation carry out a test run to ensure correct operation, then explain operation method and safety precautions to the end user.
  Tell your customers to keep this installation manual together with the operation manual, and when they give or sell this machine to any other person include this installation manual and operation manual with it.

### ⚠ WARNING

- Before installing any accessories on the cylinder unit ensure the unit is isolated from the power supply.
- Connections must be made securely and without tension on the terminals.
  The included component parts of the PAC-WK01UK-E EHPT ACCESSORIES for UK shall be used only for the purposes indicated in the installation manual.



In addition to annual servicing it is necessary to replace or inspect the ICG after a certain period of system operation. Please see table below for detailed instructions. Replacement and inspection of the ICG should always be done by a competent person with relevant training and qualifications.

**Part which requires regular replacement**

| Part | Replace every | Possible failures |
|---|---|---|
| Inlet control group (ICG) | 6 years | Water leakage due to brass corrosion (Dezincification) |

## Contents

| | Item | Piece(s) |
|---|---|---|
| ① | Unvented inlet control group (Pressure reducing valve/strainer/check valves/ expansion relief valve). | 1 |
| ② | Blanking cap (22mm) | 1 |
| ③ | Nipple & Olive (15mm) | 1 |
| ④ | Expansion vessel 18L (R3/4” ) | 1 |
| ⑤ | Tundish (15mm, 22mm) | 2 |
| ⑥ | Filling loop (15mm) | 1 |
| ⑦ | Installation manual | 1 |

The parts ① to ⑤ are provided to meet the requirements for the UK Building Regulation G3.
The parts ② and ③ are accessory parts for the unvented inlet control group.
The pressure reducing valve is factory set at 3.5 bar and the expansion relief valve at 6.0 bar.
The gas charge pressure for the expansion vessel is 3.5 bar.

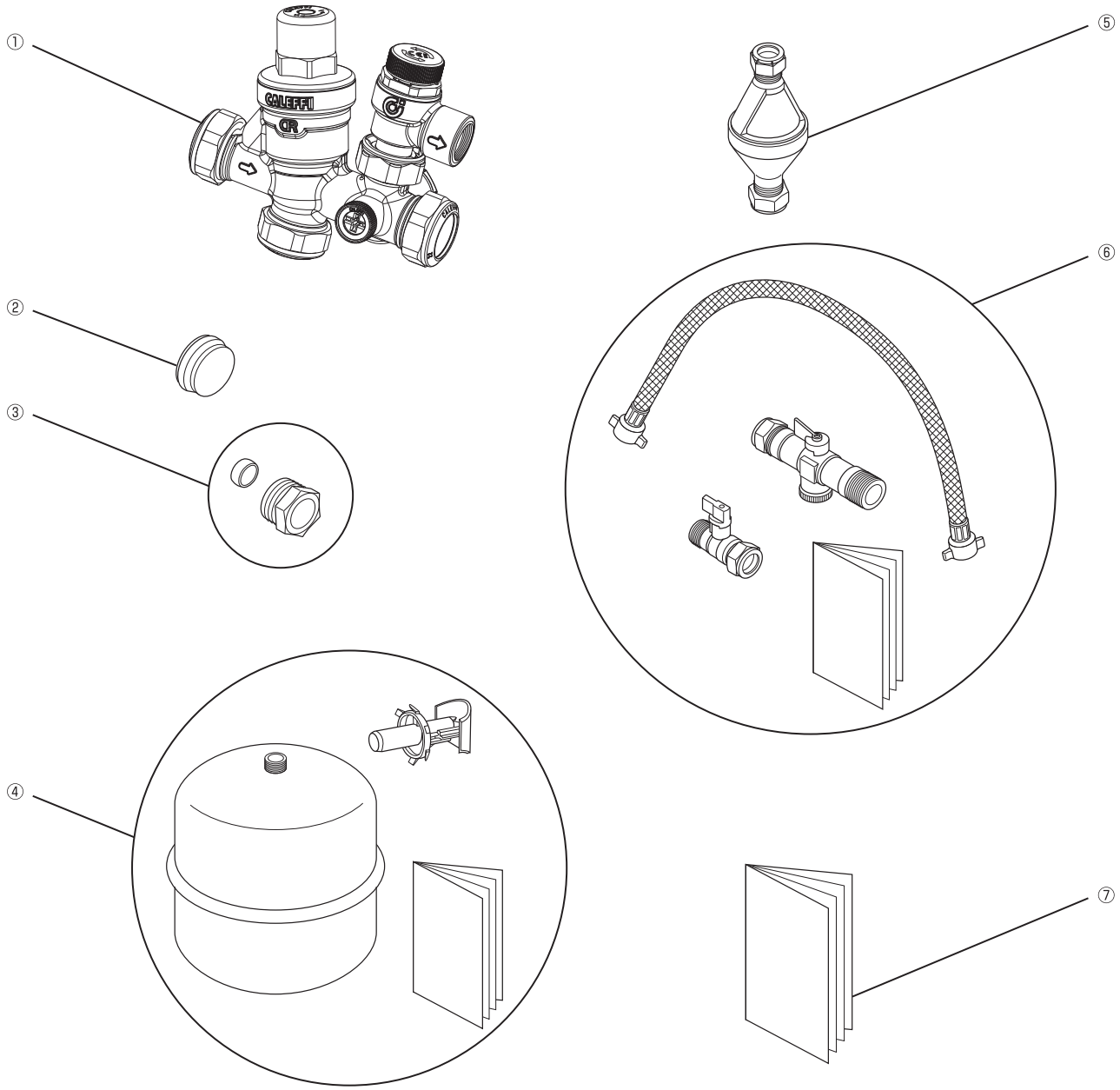

# Installation

Carefully follow these instructions and ensure that the installation conforms to UK Building Regulation G3 and the Water Supply Regulations.

**Unvented inlet control group (ICG)**

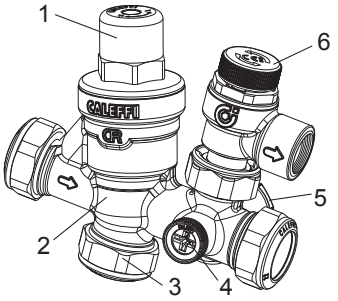


| Item | Component |
|---|---|
| 1 | Pressure reducing valve |
| 2 | Manifold block (Including check valve) |
| 3 | 22mm balanced cold water take-off |
| 4 | Pressure gauge port |
| 5 | 3/4" connection for exp.vessel |
| 6 | Expansion relief valve |

It is recommended that isolating valves are installed upstream and downstream to facilitate any future maintenance.
For safety reasons, it is essential that no isolation valve is fitted between the ICG and the cold water inlet connection of the cylinder.
Install the pressure reducing valve with its embossed arrow pointing in the direction of flow.
Ensure the expansion relief valve is seated correctly into the main block/ casting and its nut is fully tightened to secure its position.
Ensure that the expansion relief valve discharge pipework has a continuous fall and terminates via a tundish and in such a position as not to cause injury.
The first 22mm connection (Item 3 above) can be used to provide an unbalanced cold water supply. It must never be used to connect the expansion vessel. If not used, use the blanking cap (22mm) supplied.
The small black plug is a connection prepared for a pressure gauge, which is available when specified.
On the opposite side of the manifold to the pressure gauge connection, there is a 3/4" plastic plugged connection that may be used for direct mounting to the expansion vessel if required.

### Expansion vessel

Install the expansion vessel between the pressure reducing valve and the cylinder unit or by using the appropriate port of the ICG. (Ensure the expansion vessel is connected to an active section of the potable pipework and is NOT directly connected to any redundant “Dead-leg” section of pipework.)

Note:
- ■ When connecting the ICG to the expansion vessel using a field-supplied flexible hose, provide sufficient bending radius to prevent abnormal noise.
- ■ For more details about the following instructions, refer to the installation manual provided with the potable expansion vessel, as well as this manual.
  - • If the expansion vessel is installed separately to the ICG (ie. direct in-line) then the supplied flow diverter can be used.
  - • ICG should always be installed on cold water supply to cylinder to comply with WRAS/Building Regulation G3.
  - • The ICG. should be installed above the level of the T&P valve. This will avoid the requirement to drain cylinder when servicing the ICG in future.
  - • Expansion vessel should be installed hanging from connecting pipework.
  - • Expansion vessel should be fastened to a suitable surface (wall etc.) to prevent strain on pipe connection.
  - • Gas inlet screw type of expansion vessel: 8V1

### Tundish

Install the tundishes in accordance with the UK Building Regulation G3. For more details refer to the "Safety Device Discharge Arrangements" section in the installation manual for the cylinder unit .

### Filling loop

Note: Refer to the installation manual provided with the filling loop as well.

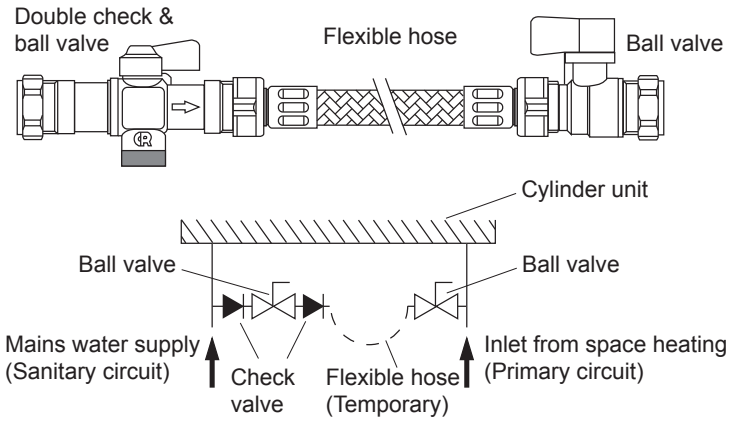

The procedure and recommendations specified in the cylinder unit installation manual for filling and pressurising the primary heating circuit of the cylinder unit must be followed.
The heating return pipe and the cold water supply pipe must be provided with tees with a short length of R250 (half hard) copper tube in the side port.
Fit the double check valve to the pipe from the mains supply pipe using the compression joint, which complies with BS EN 1252-2, ensuring that the flow through the valve is in the same direction as the arrow on the body.
Fit the ball valve to the pipe from the heating return using the compression joint.
Connect the flexible hose between the double check valve and ball valve and tighten the wing nuts to make water tight joints.
Open both ball valves and fill the system, when the pressure starts to increase on the cylinder unit pressure gauge partially close the ball valve on the double check valve to control the pressure to that specified by the cylinder unit installation manual.
Once filling and pressurisation have been completed, close both ball valves and remove the flexible hose.
If the flexible hose is removed it is recommended that caps (not supplied) are fitted to both valve connections to prevent any potential leakage.

# Maintenance and service

### Pressure reducing valve

Under normal circumstances the pressure reducing valve should not require any maintenance, but regular inspection and cleaning is recommended.
If the strainer or cartridge are damaged replace entire valve.

1. Isolate the water supply to the pressure reducing valve.
2. Unscrew anticlockwise the central calibration screw to decompress the spring.
3. Remove the plastic cover using a spanner on the hexagon faces.
4. Extract the cartridge with the aid of long nosed pliers to grip the head of the set screw.
5. Remove the strainer element.
   *If the strainer or cartridge are damaged replace item(s) accordingly.
6. Clean the strainer element and cartridge under clean running water.
7. Replace the strainer, cartridge and cover.
8. Turn on the water supply and check for leakage.
9. Re-calibrate the pressure reducing valve. (Rotate it clockwise to increase the outlet pressure and anticlockwise to reduce it.)

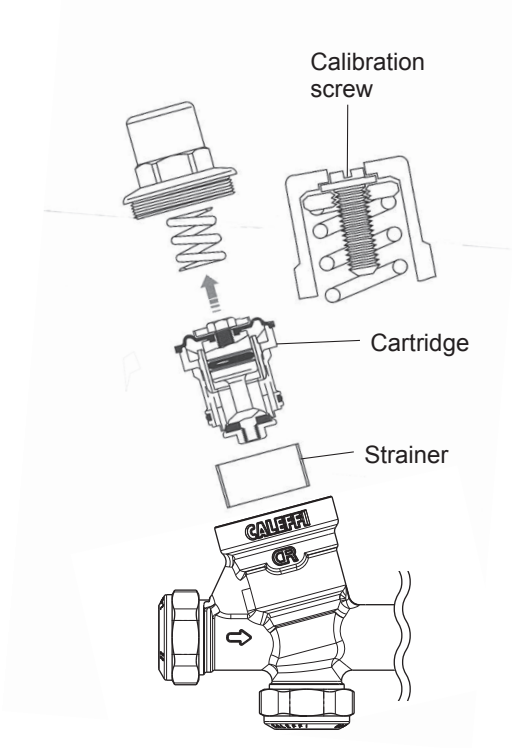


### Expansion relief valve

Manually operate (rotate head anti-clockwise) the expansion relief valve to ensure free water flow through discharge port and connecting pipe.

### Expansion vessel

The pre-charge gas pressure must be checked annually to make sure that the expansion vessel is in working order.
If water discharges through the expansion relief valve, it is possible that the expansion vessel's existing gas pre-charge pressure is too low.
Check this in the following manner:

1. Close the water supply.
2. Drain the sanitary circuit until the pressure is 0 bar.
3. Check the pre-charge.
4. Increase the gas pre-charge pressure with nitrogen/air to 3.5 bar.

Make sure that the pre-charge is not higher than the maximum working pressure.
If the expansion vessel cannot be pressurized, it is possible that the membrane has a leak.
If so, you must then replace the expansion vessel.

MITSUBISHI ELECTRIC

PARTS NAME : HIGH TEMP. THERMISTOR

PARTS No. : PAC-TH012HT-E

SALES MODEL CODE : 7H1THR7

# MITSUBISHI ELECTRIC CORPORATION

# INSTALLATION MANUAL

- Before starting installation, read the following description together with the installation manual included with the unit.
- Please read carefully and observe fully the following safety precautions.

| ⚠ WARNING | Precautions that must be observed to prevent injuries or death. |
|---|---|

- After installation carry out a test run to ensure correct operation, then explain operation method and safety precautions to the end user. Tell your customers to keep this installation manual together with the operation manual, and when they give or sell this machine to any other person include this installation manual and operation manual with it.

## ⚠ WARNING

- Before installing any accessories on the unit ensure the unit is isolated from the power supply.
- Connections must be made securely and without tension on the terminals.
- All electrical work should be performed by a qualified technician according to local regulations and the instructions given in this manual.
- The flow temperature from boiler MUST NOT exceed 70 °C (*1).
- Before running Floor Dry-up function, disconnect IN4, IN5, IN11 and IN12 wirings. (*2)

  *1 When the temperature sensed by flow temp. thermistor or return temp. thermistor exceeds 80°C, FTC will detect it as overheat error.
  *2 High-temperature water produced by boiler operation could flow in and this could cause a big damage to the floor.
- Make sure to install the boiler that has overheat protection and output flow temperature control.



<Included items>

| | Item | Piece |
|---|---|---|
| ① | High temp. thermistor 5 m, color: black | 1 |
| ② | Installation manual | 1 |

■ Local system

The high temp. thermistor is used as the boiler flow temp. thermistor (THWB1) or the mixing tank temp. thermistor (THW10).

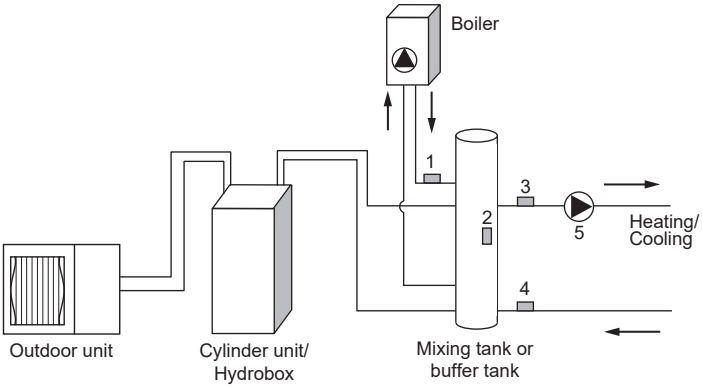


| Number | Component |
|---|---|
| 1 | Boiler flow temp. thermistor (THWB1) |
| 2 | Mixing tank temp. thermistor (THW10) |
| 3 | Flow temp. thermistor (THW6) (option) |
| 4 | Return temp. thermistor (THW7) (option) |
| 5 | Circulation pump (local supply) |

## 1. Boiler operation

FTC can control boiler only in space heating mode.
When boiler is running, the heating operation is regulated by the room thermostat connected to FTC.

**IMPORTANT NOTE: Be sure to connect room thermostat to FTC.**

### 1.1 Wiring for boiler control

<Thermistor inputs>

| Name | Terminal block | Item | Optional part model |
|---|---|---|---|
| THW6 | TBI.5 7-8 | Thermistor (Zone1 flow water temp.) (Option) | PAC-TH011-E |
| THW7 | TBI.5 5-6 | Thermistor (Zone1 return water temp.) (Option) | |
| THWB1 | TBI.6 7-8 | Thermistor (Boiler flow water temp.) | PAC-TH012HT-E |

<Outputs>
Connect OUT10 to boiler external input (Room thermostat).

| Name | Terminal block | Item | OFF | ON | Signal/Max current |
|---|---|---|---|---|---|
| OUT10 | TBO.3 1-2 | Boiler output | OFF | ON | non-voltage contact<br>• 220 - 240V AC (30V DC) 0.5 A or less<br>• 10 mA 5V DC or more |

Note: • OUT10 is separated by basic insulation from other external output signals in FTC.
• Connect the surge absorber according to the load at site.
• When the wires are wired to adjacent terminals, use ring terminals and insulate the wires.
• Do not splice the wiring to extend or shorten it, or this could affect correct monitoring of each temperature. If the wiring is too long, bundle it with a strap to adjust the length.

### 1.2 Dip switch setting

Set Dip SW1-1 and SW2-6 to ON .

| Dip switch | Function | OFF | ON |
|---|---|---|---|
| SW1-1 | Boiler | WITHOUT Boiler | WITH Boiler |
| SW2-6 | Mixing tank | WITHOUT Mixing tank | WITH Mixing tank |

### 1.3 Main controller setting

<Service menu> → “Heat source setting”
→ “Operation settings” → “Boiler operation”

| Menu | | Description |
|---|---|---|
| Heat source setting | Hybrid | Automatically switch "Heat pump" and "Boiler". |
| Hybrid settings | Outdoor ambient temp. | Set the ambient temperature to switch to Boiler operation. |
| | Priority mode | Set which one to prioritize (Ambient or Cost or $CO_2$). |
| | Outdoor ambient temp. rise | Difference in temperature to switch to Heat pump operation. |
| Intelligent settings | Energy price | Enter unit prices of electricity, and gas or oil (depending on boiler type) per 1 kWh. |
| | $CO_2$ emission | Enter $CO_2$ emission amount from electricity or boiler (gas or oil). |
| | Heat source | Enter outdoor unit capacity, electric heater capacity, and boiler efficiency. |

## 2. Buffer tank control SG

Buffer tank control operates when heating (or cooling) function is active in the smart grid ready*.
* Refer to the installation manual of indoor unit.

### 2.1 Wiring for buffer tank control

<Thermistor inputs>

| Name | Terminal block | Item | Optional part model |
|---|---|---|---|
| THW6 | TBI.5 7-8 | Thermistor (Zone1 flow water temp.) (Option) | PAC-TH011-E |
| THW7 | TBI.5 5-6 | Thermistor (Zone1 return water temp.) (Option) | |
| THW10 | TBI.6 5-6 | Thermistor (Mixing tank water temp.) | PAC-TH012HT-E |

<Signal inputs>

| Name | Terminal block | Item | OFF (open) | ON (short) |
|---|---|---|---|---|
| IN11 | TBI.3 3-4 | Smart grid ready input | | |
| IN12 | TBI.3 1-2 | | | |

| IN11 | IN12 | Meaning |
|---|---|---|
| OFF (open) | OFF (open) | Normal operation |
| ON (short) | OFF (open) | Switch-on recommendation |
| OFF (open) | ON (short) | Switch-off command |
| ON (short) | ON (short) | Switch-on command |

### 2.2 Dip switch setting

Set Dip SW2-6 to ON.

| Dip switch | Function | OFF | ON |
|---|---|---|---|
| SW2-6 | Mixing tank | WITHOUT Mixing tank | WITH Mixing tank |

### 2.3 Main controller setting

<Service menu> → “Operation settings” → “Smart grid ready”

| Name | | | Description |
|---|---|---|---|
| Heating | Target temp. | | Target temp. of "Switch-on recommendation". |
| | | | Target temp. of "Switch-on command". |
| Cooling | Target temp. | | Target temp. of "Switch-on recommendation". |
| | | | Target temp. of "Switch-on command". |
| Pump cycles | On/Off | | When set to "On", the water circulation pump is operated intermittently according to the heat storage temp. of the buffer tank. |
| | Interval | | Re-judgment of the pump on/off time. |

MITSUBISHI ELECTRIC

PARTS NAME : HIGH TEMP. THERMISTOR

PARTS No. : PAC-TH012HTL-E

SALES MODEL CODE : 7H1THR8

**MITSUBISHI ELECTRIC CORPORATION**

# INSTALLATION MANUAL

- Before starting installation, read the following description together with the installation manual included with the unit.
- Please read carefully and observe fully the following safety precautions.

| ⚠ WARNING | Precautions that must be observed to prevent injuries or death. |
|---|---|

- After installation carry out a test run to ensure correct operation, then explain operation method and safety precautions to the end user. Tell your customers to keep this installation manual together with the operation manual, and when they give or sell this machine to any other person include this installation manual and operation manual with it.

## ⚠ WARNING

- Before installing any accessories on the unit ensure the unit is isolated from the power supply.
- Connections must be made securely and without tension on the terminals.
- All electrical work should be performed by a qualified technician according to local regulations and the instructions given in this manual.
- The flow temperature from boiler MUST NOT exceed 70 °C (*1).
- Before running Floor Dry-up function, disconnect IN4, IN5, IN11 and IN12 wirings. (*2)

  *1 When the temperature sensed by flow temp. thermistor or return temp. thermistor exceeds 80°C, FTC will detect it as overheat error.
  *2 High-temperature water produced by boiler operation could flow in and this could cause a big damage to the floor.
- Make sure to install the boiler that has overheat protection and output flow temperature control.



<Included items>

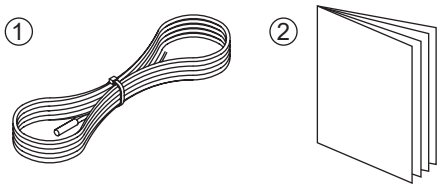


| | Item | Piece |
|---|---|---|
| ① | High temp. thermistor 30 m, color: black | 1 |
| ② | Installation manual | 1 |

■ Local system

The high temp. thermistor is used as the boiler flow temp. thermistor (THWB1) or the mixing tank temp. thermistor (THW10).

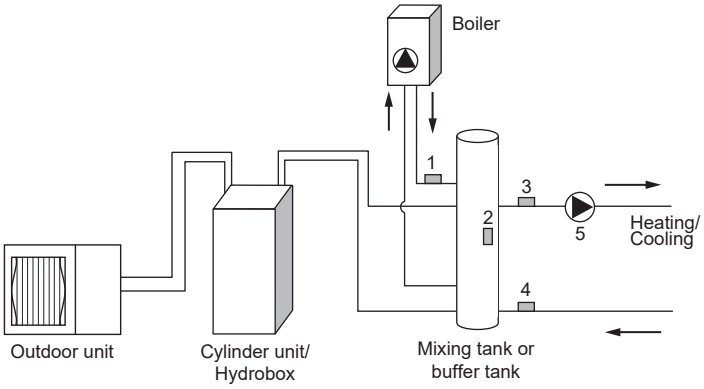


| Number | Component |
|---|---|
| 1 | Boiler flow temp. thermistor (THWB1) |
| 2 | Mixing tank temp. thermistor (THW10) |
| 3 | Flow temp. thermistor (THW6) (option) |
| 4 | Return temp. thermistor (THW7) (option) |
| 5 | Circulation pump (local supply) |

## 1. Boiler operation

FTC can control boiler only in space heating mode.
When boiler is running, the heating operation is regulated by the room thermostat connected to FTC.

**IMPORTANT NOTE: Be sure to connect room thermostat to FTC.**

### 1.1 Wiring for boiler control

<Thermistor inputs>

| Name | Terminal block | Item | Optional part model |
|---|---|---|---|
| THW6 | TBI.5 7-8 | Thermistor (Zone1 flow water temp.) (Option) | PAC-TH011-E |
| THW7 | TBI.5 5-6 | Thermistor (Zone1 return water temp.) (Option) | |
| THWB1 | TBI.6 7-8 | Thermistor (Boiler flow water temp.) | PAC-TH012HTL-E |

<Outputs>
Connect OUT10 to boiler external input (Room thermostat).

| Name | Terminal block | Item | OFF | ON | Signal/Max current |
|---|---|---|---|---|---|
| OUT10 | TBO.3 1-2 | Boiler output | OFF | ON | non-voltage contact<br>• 220 - 240V AC (30V DC) 0.5 A or less<br>• 10 mA 5V DC or more |

Note: • OUT10 is separated by basic insulation from other external output signals in FTC.
• Connect the surge absorber according to the load at site.
• When the wires are wired to adjacent terminals, use ring terminals and insulate the wires.
• Do not splice the wiring to extend or shorten it, or this could affect correct monitoring of each temperature. If the wiring is too long, bundle it with a strap to adjust the length.

### 1.2 Dip switch setting

Set Dip SW1-1 and SW2-6 to ON .

| Dip switch | Function | OFF | ON |
|---|---|---|---|
| SW1-1 | Boiler | WITHOUT Boiler | WITH Boiler |
| SW2-6 | Mixing tank | WITHOUT Mixing tank | WITH Mixing tank |

### 1.3 Main controller setting

<Service menu> → “Heat source setting”
→ “Operation settings” → “Boiler operation”

| Menu | | Description |
|---|---|---|
| Heat source setting | Hybrid | Automatically switch "Heat pump" and "Boiler". |
| Hybrid settings | Outdoor ambient temp. | Set the ambient temperature to switch to Boiler operation. |
| | Priority mode | Set which one to prioritize (Ambient or Cost or $CO_2$). |
| | Outdoor ambient temp. rise | Difference in temperature to switch to Heat pump operation. |
| Intelligent settings | Energy price | Enter unit prices of electricity, and gas or oil (depending on boiler type) per 1 kWh. |
| | $CO_2$ emission | Enter $CO_2$ emission amount from electricity or boiler (gas or oil). |
| | Heat source | Enter outdoor unit capacity, electric heater capacity, and boiler efficiency. |

## 2. Buffer tank control SG

Buffer tank control operates when heating (or cooling) function is active in the smart grid ready*.
* Refer to the installation manual of indoor unit.

### 2.1 Wiring for buffer tank control

<Thermistor inputs>

| Name | Terminal block | Item | Optional part model |
|---|---|---|---|
| THW6 | TBI.5 7-8 | Thermistor (Zone1 flow water temp.) (Option) | PAC-TH011-E |
| THW7 | TBI.5 5-6 | Thermistor (Zone1 return water temp.) (Option) | |
| THW10 | TBI.6 5-6 | Thermistor (Mixing tank water temp.) | PAC-TH012HTL-E |

<Signal inputs>

| Name | Terminal block | Item | OFF (open) | ON (short) |
|---|---|---|---|---|
| IN11 | TBI.3 3-4 | Smart grid ready input | | |
| IN12 | TBI.3 1-2 | | | |

| IN11 | IN12 | Meaning |
|---|---|---|
| OFF (open) | OFF (open) | Normal operation |
| ON (short) | OFF (open) | Switch-on recommendation |
| OFF (open) | ON (short) | Switch-off command |
| ON (short) | ON (short) | Switch-on command |

### 2.2 Dip switch setting

Set Dip SW2-6 to ON.

| Dip switch | Function | OFF | ON |
|---|---|---|---|
| SW2-6 | Mixing tank | WITHOUT Mixing tank | WITH Mixing tank |

### 2.3 Main controller setting

<Service menu> → “Operation settings” → “Smart grid ready”

| Name | | | Description |
|---|---|---|---|
| Heating | Target temp. | | Target temp. of "Switch-on recommendation". |
| | | | Target temp. of "Switch-on command". |
| Cooling | Target temp. | | Target temp. of "Switch-on recommendation". |
| | | | Target temp. of "Switch-on command". |
| Pump cycles | On/Off | | When set to "On", the water circulation pump is operated intermittently according to the heat storage temp. of the buffer tank. |
| | Interval | | Re-judgment of the pump on/off time. |

MITSUBISHI ELECTRIC

# ATW INDOOR UNIT OPTIONAL PARTS 2 ZONE KIT PAC-TZ02-E

## INSTALLATION MANUAL

- This 2 zone kit MUST be used with Cylinder unit or Hydrobox **except for E*SE models**.
- Before starting installation, read the following description together with the installation manual included with the Cylinder unit (Hydrobox).
- Please read carefully and observe fully the following safety precautions.

| | |
|---|---|
| ⚠ WARNING | Precaution that must be observed to prevent injuries or death. |
| ⚠ CAUTION | Incorrect handling could lead to injury or damage to house and household articles. |

- After installation, carry out a test run to ensure correct operation, then explain operation method and safety precautions to the end user.
  Tell your customers to keep this installation manual, and when they give or sell this machine to any other person include this installation manual with it.

### ⚠ WARNING

- If Cylinder unit (Hydrobox) has already been connected to the power supply, ensure circuit breaker is off before carrying out electrical work.
- If the 2 zone kit is installed incorrectly or modified after installation by the user, water may leak or 2 zone kit may fall from Cylinder unit or wall.
- All installation should be performed by a qualified technician according to local regulations and the instructions given in this manual.
- Connections must be made securely and without tension on the terminals.

### ⚠ CAUTION

- The 2 zone kit must be installed by 2 or more people.
- All exposed water pipework should be insulated to prevent unnecessary heat loss and condensation.
- To also use the 2 zone kit in Cooling mode, securely apply heat-insulation to draining pipework. If heat-insulation is inadequate, condensation could occur on the surface of pipes and dew could drop on the floor or important goods.
- To prevent dirty water from draining onto the floor next to Cylinder unit or under Hydrobox, please connect appropriate discharge pipework from the 2 zone kit to its disposal location.
- Secure 2 zone kit to prevent it from falling.
- Do not hold piping or drain socket when moving the 2 zone kit.
- Avoid the connection of piping or drain socket from damage. Otherwise, it may cause water leakage.
- To prevent incorrect installation, please connect the flexible hose at the bend radius of 150 mm or more.
- The water flow rate between the Cylinder unit (Hydrobox) and the 2 zone kit must be greater than the total flow rate of Zone1 and Zone2. Otherwise, Zone1 and Zone2 may not be heated properly.

## ■ Disposal of the Unit

<Figure 1.1>

**Note: This symbol mark is for EU countries only.**
**This symbol mark is according to the directive 2012/19/EU Article 14 Information for users and Annex IX, and/or to the directive 2006/66/EC Article 20 Information for end-users and Annex II.**
Your Mitsubishi Electric heating system products have been manufactured with high quality materials and components which can be recycled and/or reused. The symbol in Figure 1.1 means that electrical and electronic equipment, batteries and accumulators at the end of their life, should be disposed of separately from your household waste.
If a chemical symbol is printed beneath the symbol (Figure 1.1), this chemical symbol means that the battery or accumulator contains a heavy metal at a certain concentration. This is indicated as follows;
Hg: mercury (0.0005%), Cd: cadmium (0.002%), Pb: lead (0.004%)
In the European Union there are separate collection systems for used electrical and electronic products, batteries and accumulators.
Please dispose of this equipment, batteries and accumulators correctly at your local community waste collection/recycling centre.
**Contact your local Mitsubishi Electric dealer for country-specific details on disposal.**
Please, help us to conserve the environment we live in.

### Contents

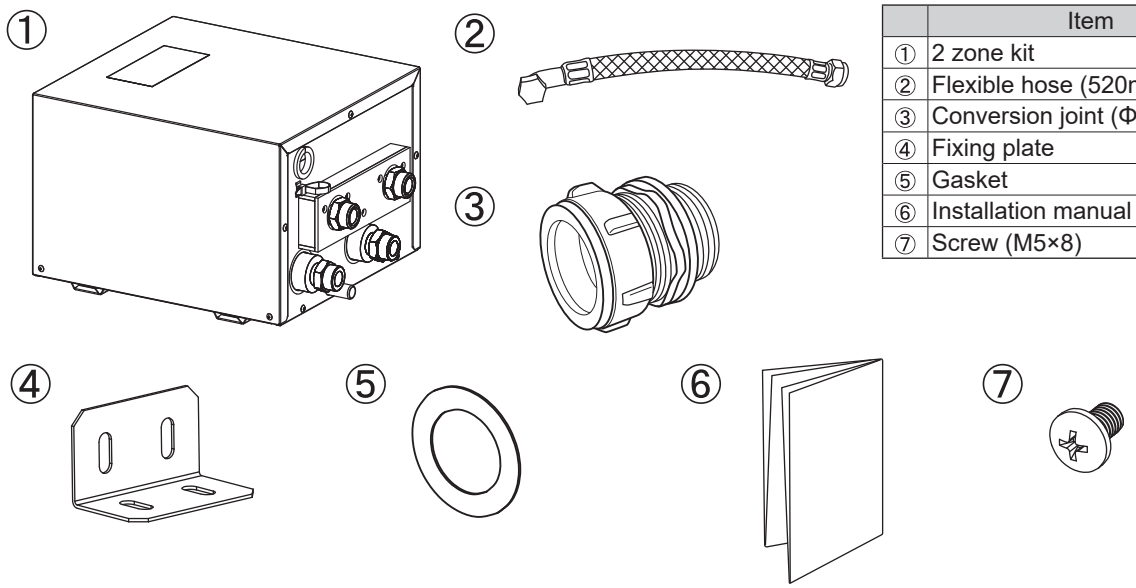


| | Item | Q'ty |
|---|---|---|
| ① | 2 zone kit | 1 |
| ② | Flexible hose (520mm) | 2 |
| ③ | Conversion joint (Φ28 → G1) | 2 |
| ④ | Fixing plate | 2 |
| ⑤ | Gasket | 4 |
| ⑥ | Installation manual | 1 |
| ⑦ | Screw (M5×8) | 2 |

### Outline

Unit: mm

| | |
|---|---|
| A | From Cylinder unit (Hydrobox) |
| B | To Cylinder unit (Hydrobox) |
| C | From Zone1 |
| D | To Zone1 |
| E | From Zone2 |
| F | To Zone2 |

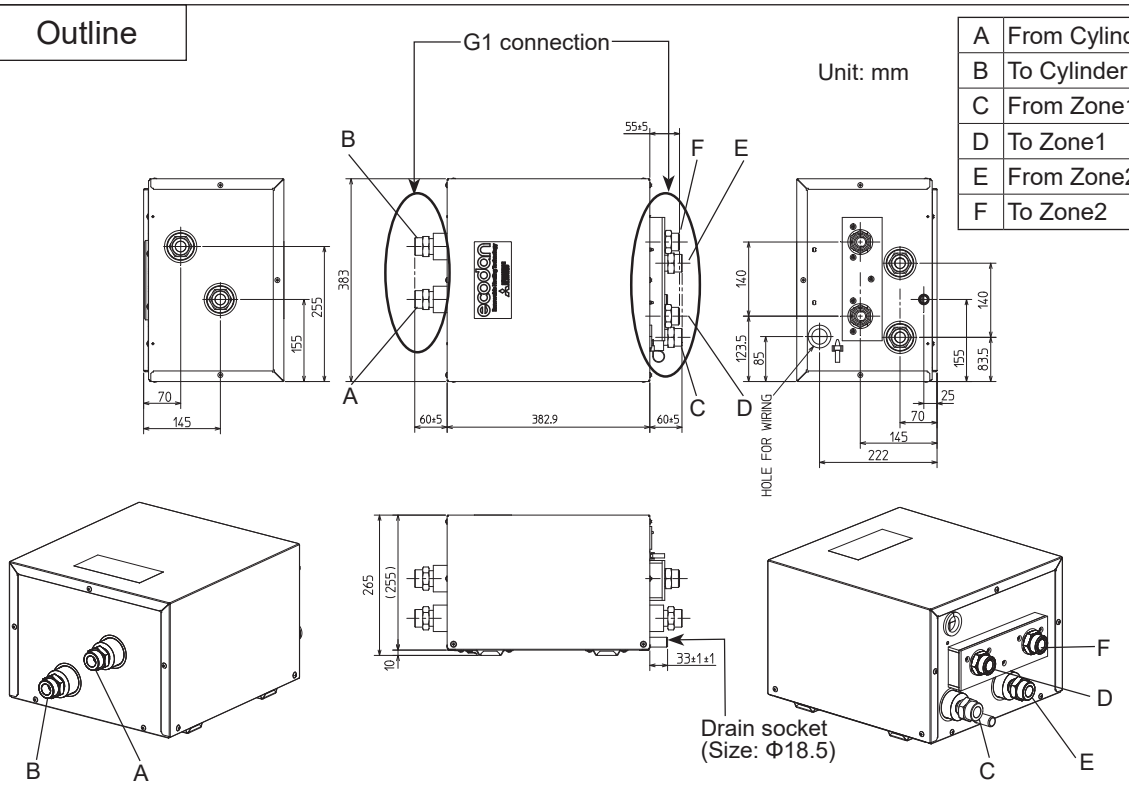

## Component parts

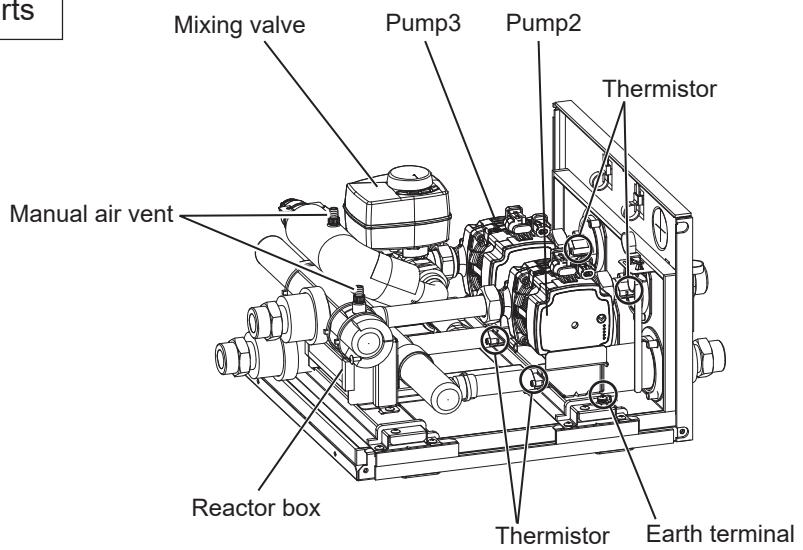


## Installation position

Unit: mm

<Cylinder unit>

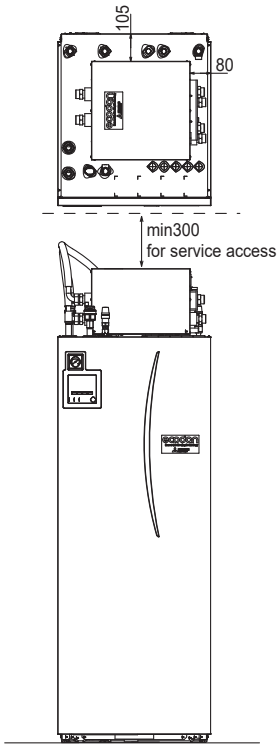


<Hydrobox>

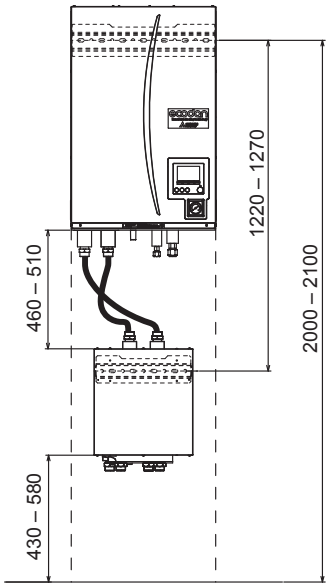


## Water circuit and system figure

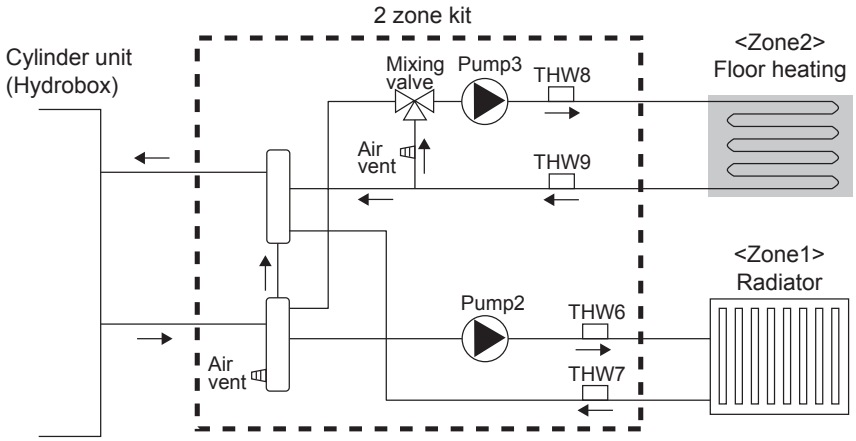

1 In the case of Cylinder unit

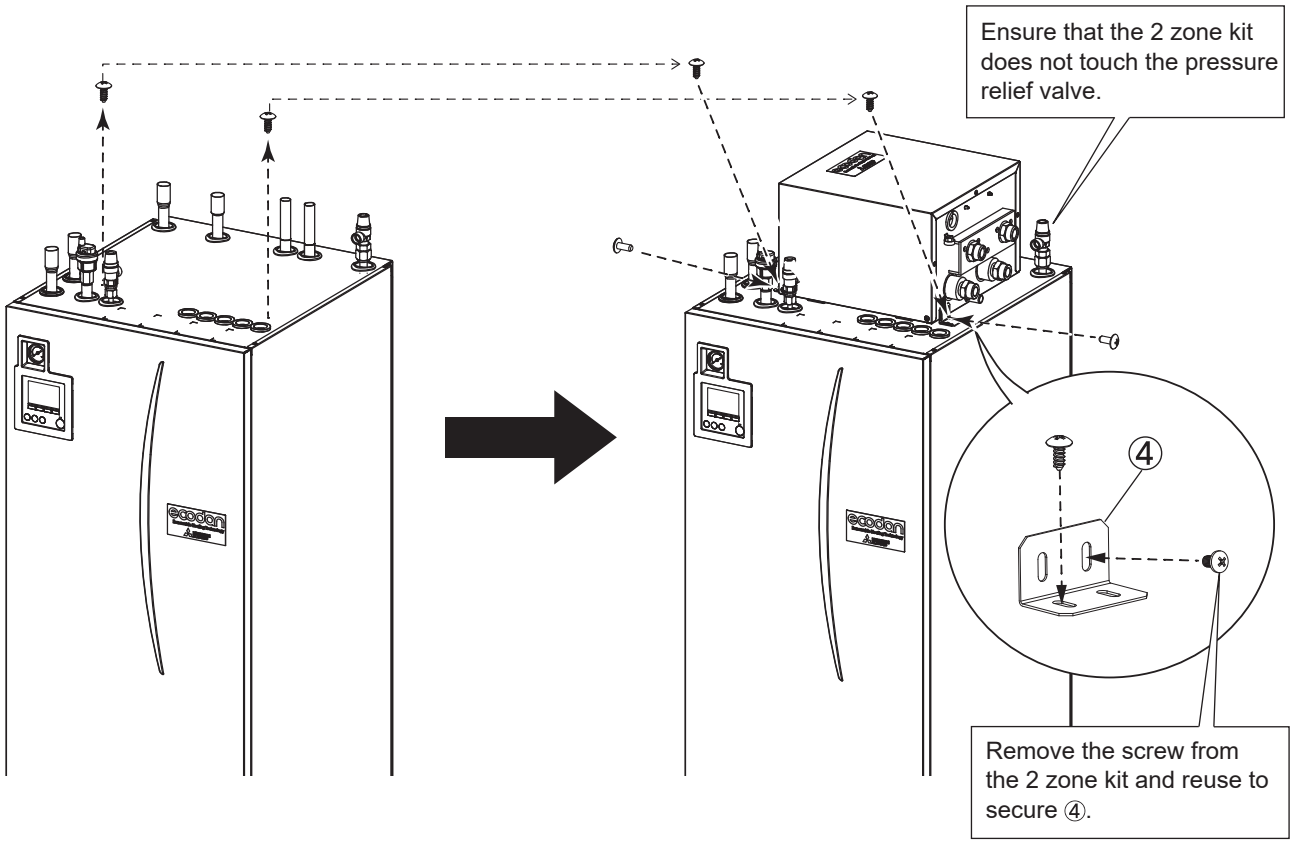


2 In the case of Cylinder unit

After hand tighten the nut, tighten the joint 1 turn.
If necessary, tighten by another 1/4 of a turn.

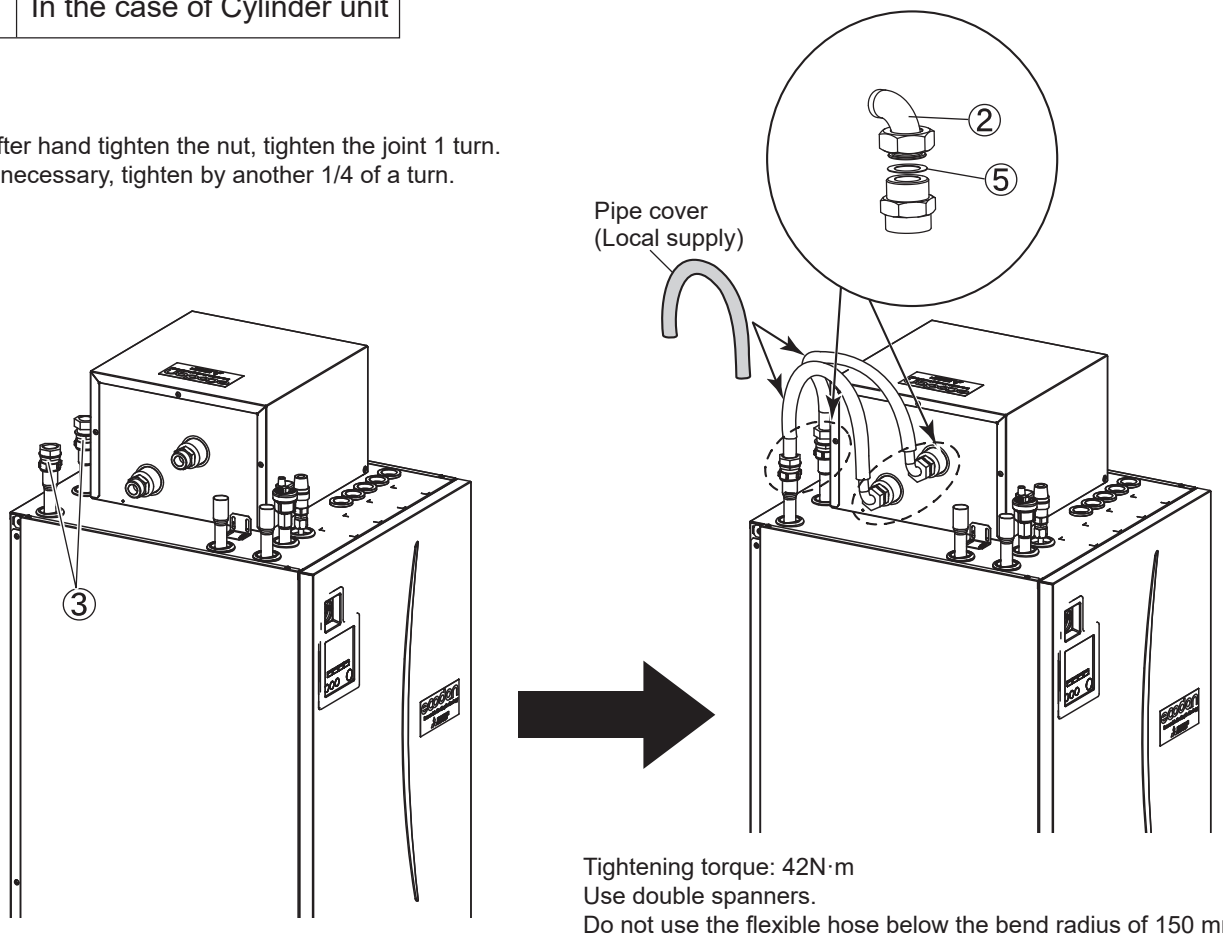


Tightening torque: 42N·m
Use double spanners.
Do not use the flexible hose below the bend radius of 150 mm.

## 1 In the case of Hydrobox

1.
Remove the back plate from the top of the 2-zone kit.

2.
Install the included back plate accessory.

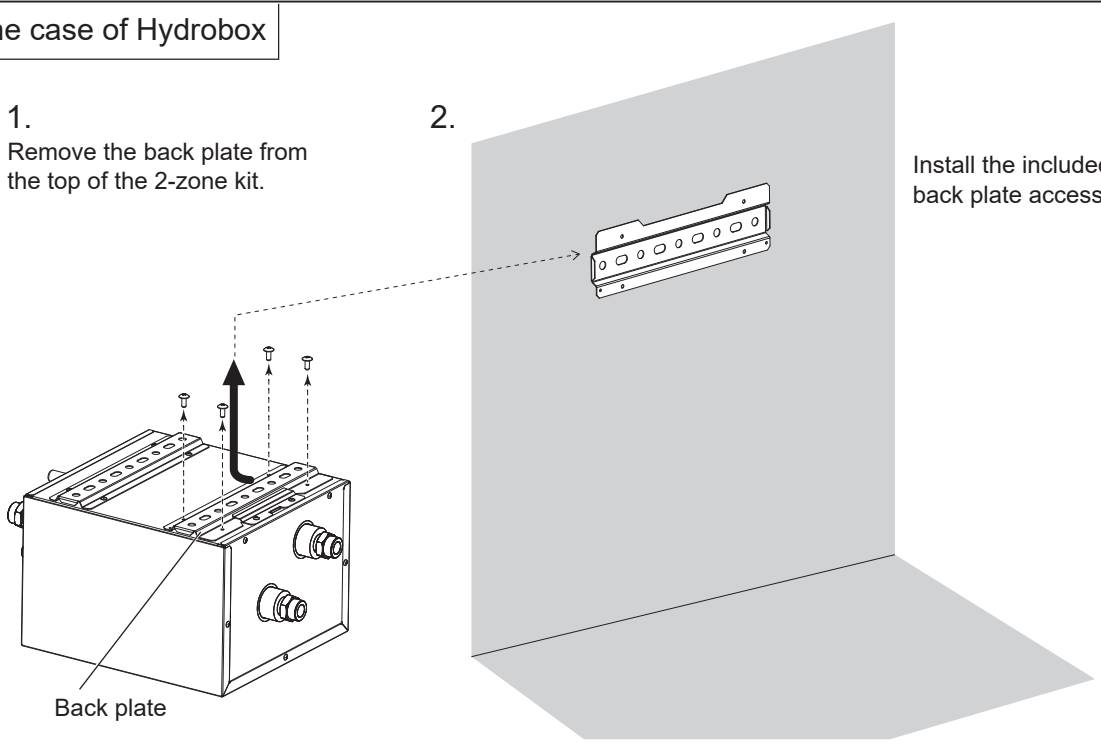


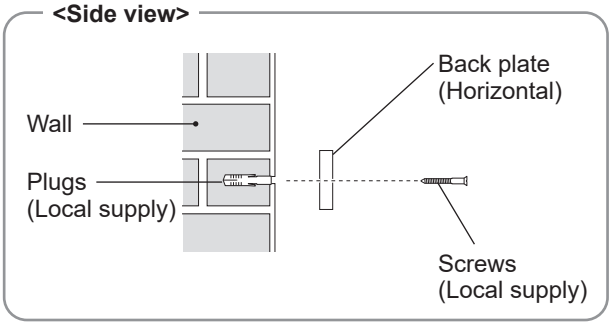


- Ensure that the notch is positioned at the TOP of the back plate. The back plate is provided with screw mounting holes that are round or oval. To prevent the 2-zone kit from falling off the wall, choose the appropriate number of holes or hole positions and horizontally secure the back plate to the appropriate wall location.

## 2 In the case of Hydrobox

1.

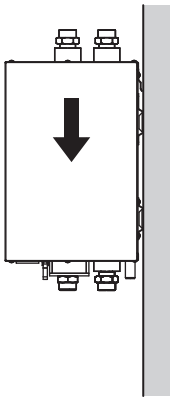

2.

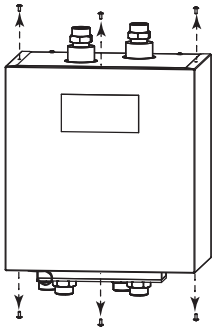

3.

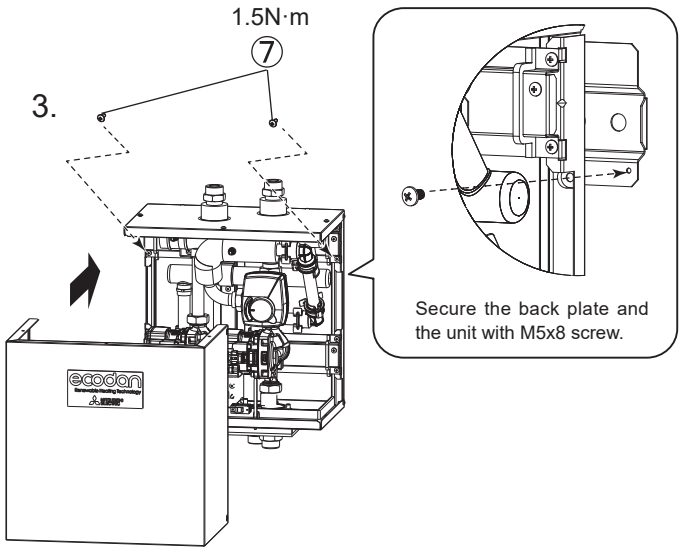


Optional parts

## 3 In the case of Hydrobox

Heating only model

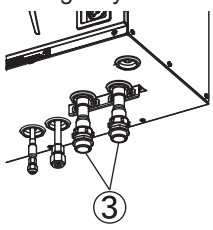


After hand tighten the nut, tighten the joint 1 turn.
If necessary, tighten by another 1/4 of a turn.

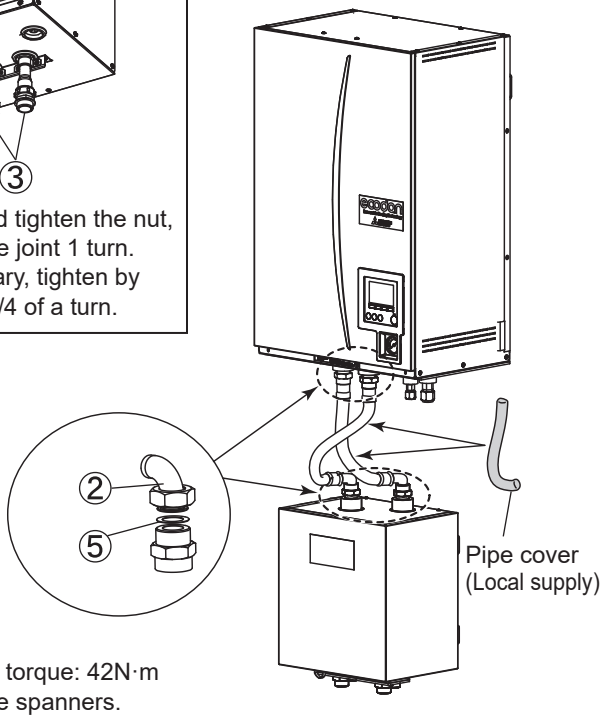


Tightening torque: 42N·m
Use double spanners.
Do not use the flexible hose below the bend radius of 150 mm.

**<View from below>**

Heating only model

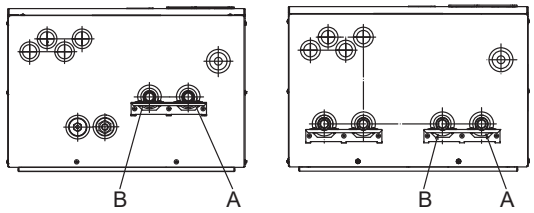


Heating and cooling model

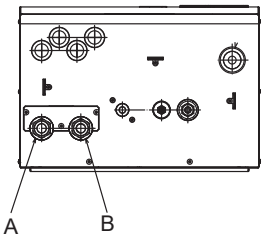


| Letter | Pipe description |
|---|---|
| A | Space heating/Indirect DHW tank (primary) return connection |
| B | Space heating/Indirect DHW tank (primary) flow connection |

## Drain piping

Connect the drain pipe only for Heating/Cooling models.

<Cylinder unit>

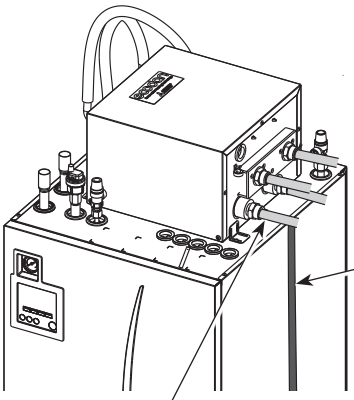

Field supplied drain pipe (VP-20A)* (Insulated)

Connect drain socket to field pipeworks using suitable adhesive bond.

<Hydrobox>

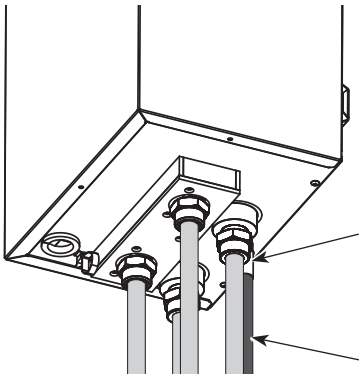

Connect drain socket to field pipeworks using suitable adhesive bond.

Field supplied drain pipe (VP-20A)* (Insulated)

NOTE
- Please use PVC pipe for drain piping.
- Use only compatible adhesive/glue for pipe joint.
- For proper drain-off, install pipework with gradient/fall of min. 1/100.
- Install pipe to fall continuously without bowing.
- Do not install any air purge points on condensate drain pipe run.
- Condensate drain pipe must discharge to suitable and safe outlet location. It should not be directly connected to any sewer-connected pipework that may introduce sulphurous gases/smells to the building.

* “VP-20” is a PVC pipe with an outside diameter of 26 mm and an inside diameter of 20 mm.

## Wiring

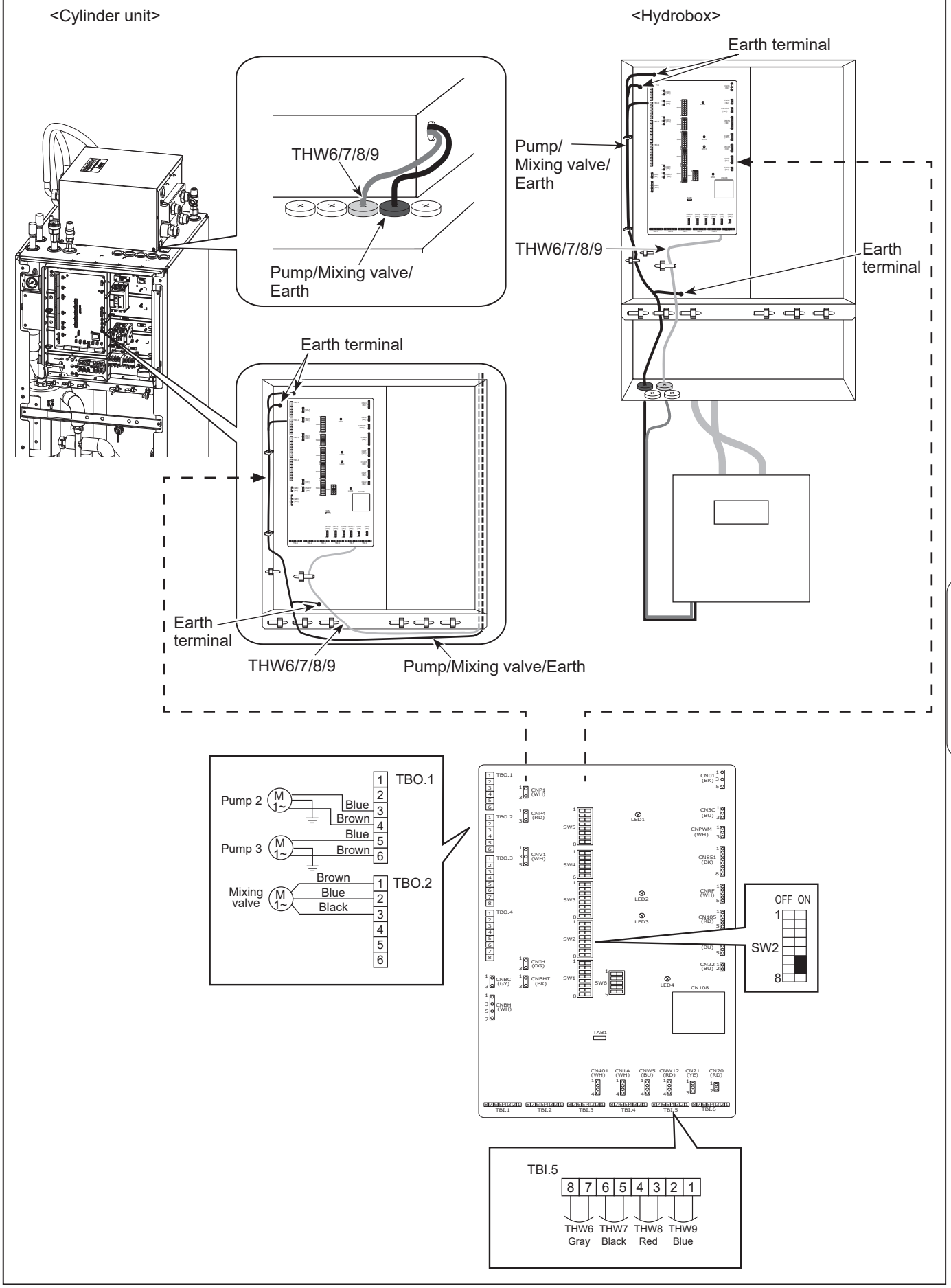
<Cylinder unit>
<Hydrobox>
Earth terminal
THW6/7/8/9
Pump/Mixing valve/
Earth
Pump/
Mixing valve/
Earth
THW6/7/8/9
Earth
terminal
Earth terminal
Earth
terminal
THW6/7/8/9
Pump/Mixing valve/Earth
Pump 2
Blue
Brown
Pump 3
Blue
Brown
Mixing
valve
Brown
Blue
Black
TBO.1
TBO.2
OFF ON
SW2
TBI.5
8 7 6 5 4 3 2 1
THW6 THW7 THW8 THW9
Gray Black Red Blue

## DIP Switch settings of Cylinder unit (Hydrobox)

Setting the following DIP switches are necessary for 2 zone control. (See the installation manual of Cylinder unit (Hydrobox) for more information.)

| DIP switch | Function | OFF | ON | Setting when using 2 zone kit |
|---|---|---|---|---|
| SW2-6 | Mixing tank | WITHOUT Mixing tank | WITH Mixing tank | ON |
| SW2-7 | 2-zone temperature control | Inactive | Active * | ON |

* Active only when SW3-6 is set to OFF.

## Specifications

| Model name | PAC-TZ02-E |
|---|---|
| Dimension | 265mm × 383mm × 383mm |
| Weight | 17kg |
| Power supply | 230V/single phase/50Hz from Cylinder unit (Hydrobox) |
| Sound pressure level | 28dB(A) |
| Sound power level | 40dB(A) |
| Pump2, 3 | Max. 52W/0.52A |
| | Max. head 7.0m *1 |
| Mixing valve | 5W |
| | Running time 90° 120s |
| Water flow rate range | Depend on outdoor unit |

Note:
- Max. flow rate is 36.9L/min. If the flow rate exceeds 36.9L/min, pipes would be eroded.
- The water flow rate between the Cylinder unit (Hydrobox) and the 2 zone kit must be greater than the total flow rate of Zone1 and Zone2.

## Pump performance view

| Display | Performance in % of MAX consumption |
|---|---|
| One green LED | 0 |
| One green LED + one yellow LED | 0-25 |
| One green LED + two yellow LED | 25-50 |
| One green LED + three yellow LED | 50-75 |
| One green LED + four yellow LED | 75-100 |

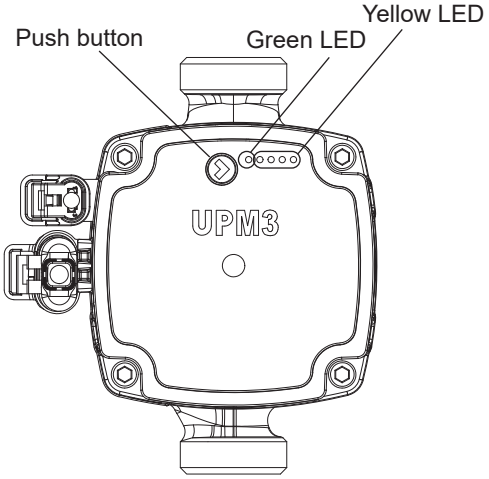


## Pump key lock function

If you press the button for more than 10 seconds, you can toggle between enabling/disabling the key lock function.

## Pump setting selection

You can check the setting by pressing the push button.
If you presS the button for 2 to 10 seconds, the user interface switches to “setting selection” if the user interface is unlocked.
You can change the settings as below table.

| Mode | LED1 green | LED2 green | LED3 yellow | LED4 yellow | LED5 yellow |
|---|---|---|---|---|---|
| PP1 | ● | | ● | | |
| PP2 | ● | | ● | ● | |
| PP3 | ● | | ● | ● | ● |
| PP AA | ● | | | | |
| CP1 | | ● | ● | | |
| CP2 | | ● | ● | ● | |
| CP3 | | ● | ● | ● | ● |
| CP AA | | ● | | | |
| CC1 | | | ● | | |
| CC2 | | | ● | ● | |
| CC3 | | | ● | ● | ● |

**PP: Proportional Pressure**

The head (pressure) is reduced at falling heat demand and increased at rising heat demand.

PP1: lowest proportional pressure curve
PP2: intermediate proportional pressure curve
PP3: highest proportional pressure curve
PP Auto Adapt: highest to lowest proportional pressure curve

The Auto Adapt function enables the circulator to adjust the pump performance automatically to the size of the system or the variations in load over time.

<Proportional Pressure>

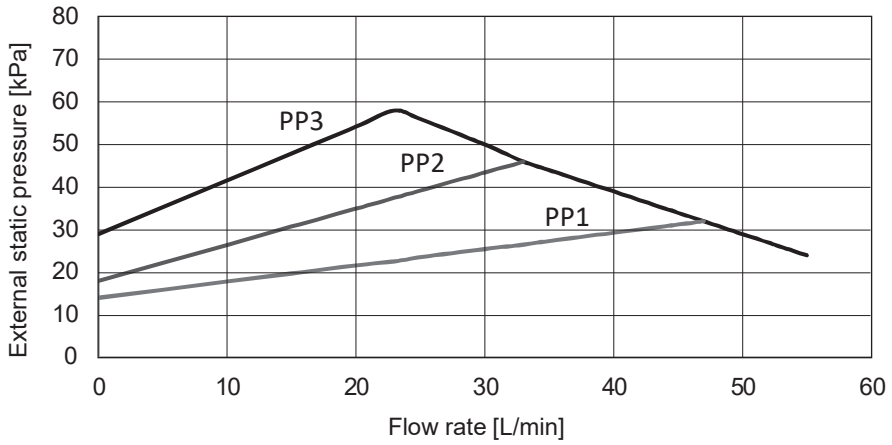

**CP: Constant Pressure**

The head (pressure) is kept constant, irrespective of the heat demand.

CP1: lowest constant pressure curve
CP2: intermediate constant pressure curve
CP3: highest constant pressure curve
CP Auto Adapt: highest to lowest constant pressure curve

The Auto Adapt function enables the circulator to adjust the pump performance automatically to the size of the system or the variations in load over time.

<Constant Pressure>

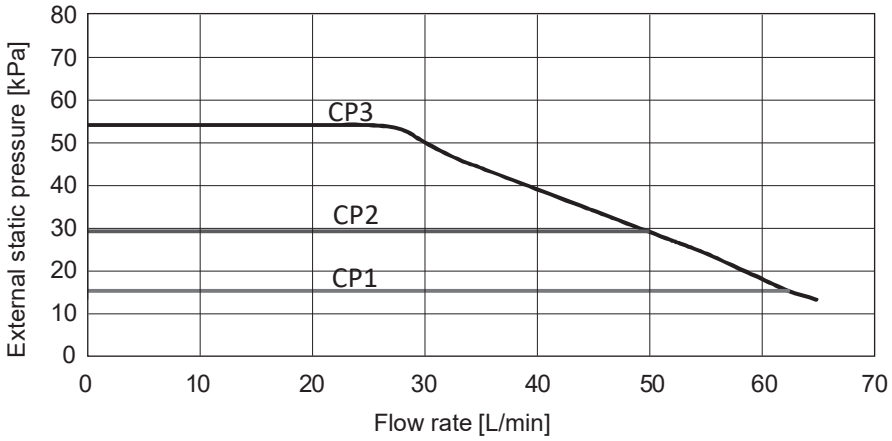




**CC: Constant Curve**

The circulator runs on a constant curve.

<Constant Curve>

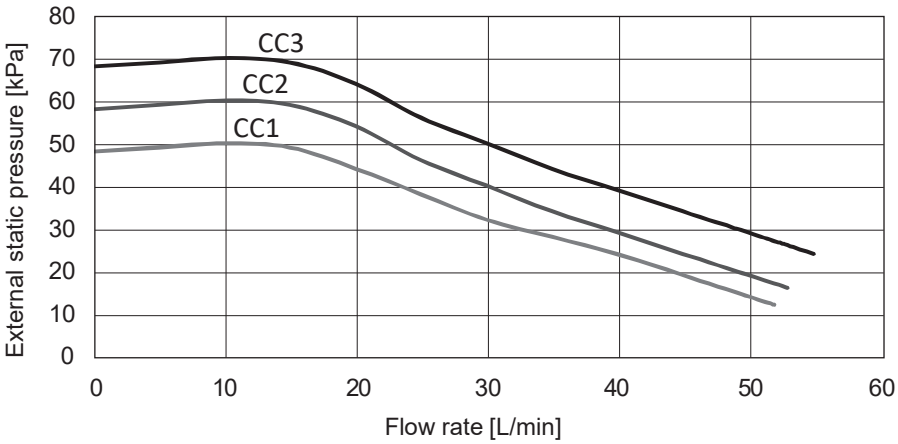

MITSUBISHI ELECTRIC

PARTS NAME : PRESSURE SENSOR

PARTS No. : PAC-PS01-E

SALES MODEL CODE : 7H1PS01

# MITSUBISHI ELECTRIC CORPORATION

# INSTALLATION MANUAL

- Before starting installation, read the following description together with the installation manual included with the unit.
- Please read carefully and observe fully the following safety precautions.

| ⚠ WARNING | Precautions that must be observed to prevent injuries or death. |
|---|---|

- After installation carry out a test run to ensure correct operation, then explain operation method and safety precautions to the end user. Tell your customers to keep this installation manual together with the operation manual, and when they give or sell this machine to any other person include this installation manual and operation manual with it.

## ⚠ WARNING

- Before installing any accessories on the unit ensure the unit is isolated from the power supply.
- Connections must be made securely and without tension on the terminals.
- All electrical work should be performed by a qualified technician according to local regulations and the instructions given in this manual.
- Do not remodel this part.



<Included items>

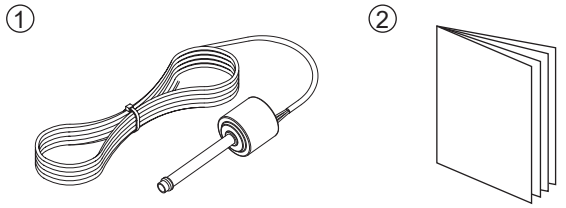


| | Item | Piece |
|---|---|---|
| ① | Pressure sensor 1.9 m | 1 |
| ② | Installation manual (This paper) | 1 |

■ Local system

Install the pressure sensor on the flow side of the refrigerant pipe.

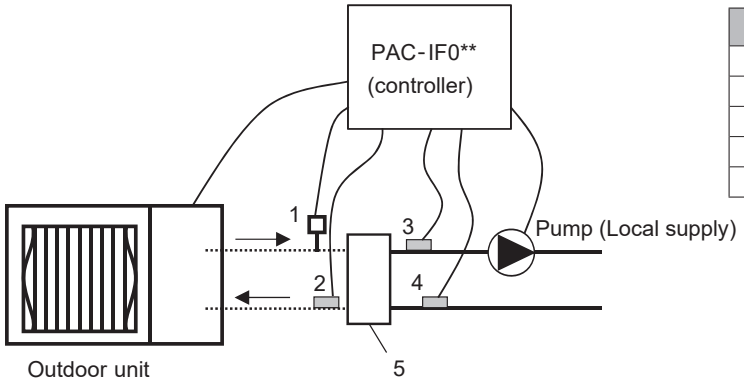


| Number | Component |
|---|---|
| 1 | Pressure sensor |
| 2 | Refrigerant liquid temp. thermistor (TH2) |
| 3 | Flow temp. thermistor (THW1) |
| 4 | Return temp. thermistor (THW2) |
| 5 | Plate heat exchanger (local supply) |

**<Note>**

Be sure to set this optional part when the combination of the below models are set.

▪ Outdoor unit: SUZ-SWM**VA ▪ Indoor unit: PAC-IF071B-E
PAC-IF033****-E

## 1. Pipe work

Install the pressure sensor following the Note below.

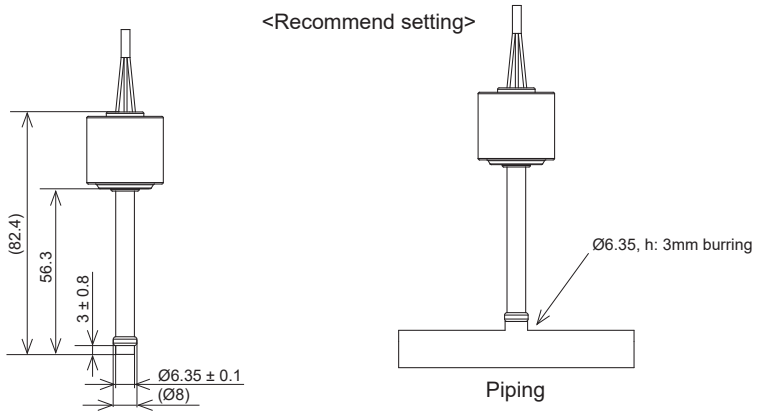


**<Note>**

- Install the sensor within 0.4 m from the plate heat exchanger.
- When brazing the pipe, keep the temperature around the cap at 100 °C or lower. Failure to do so could impair waterproof performance of the pressure sensor.
- When wiring, please do not touch the terminals while live, otherwise the pressure sensor could be damaged by static electricity.
- Please do not install the pressure sensor anywhere that may come into contact with water.
- Please do not apply any stress (e.g. bending stress, pulling stress, or impact shock) to the electric wire. Failure to do so could break or damage the electric wire.

## 2. Electrical work

| Model | Connector | Item |
|---|---|---|
| PAC-IF07*B-E | CN401 | Pressure sensor |
| PAC-IF033****-E | CN401 | Pressure sensor |

## 3. Dip switch setting

| Model | Dip switch | Function | OFF | ON |
|---|---|---|---|---|
| PAC-IF071B-E | SW6-3 | Pressure sensor | Inactive | Active |
| PAC-IF033****-E | SW4-1 | Pressure sensor | Inactive | Active |

## 4. Specifications

| | |
|---|---|
| Ambient temperature range | -30 to 100 °C |
| Fluid temperature range | -30 to 120 °C |

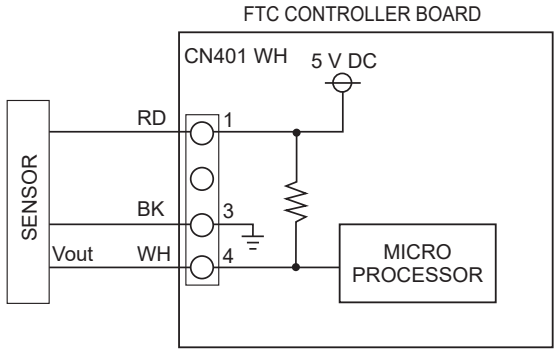


①-③ : 5 V (DC)
③-④ : Output Vout (DC)

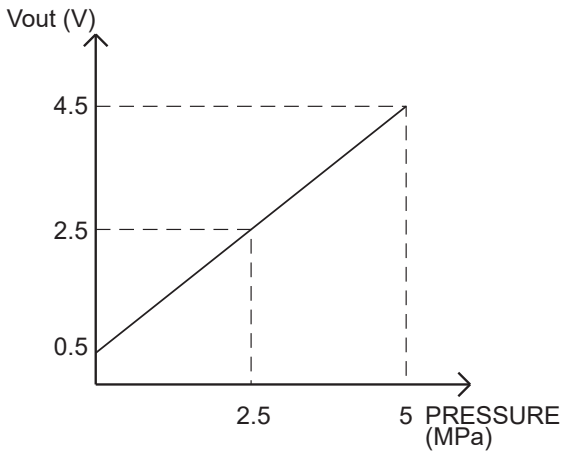

MITSUBISHI ELECTRIC

PARTS NAME : FLOW SENSOR

PARTS No. : PAC-FS01-E

SALES MODEL CODE : 7H1FS01

# MITSUBISHI ELECTRIC CORPORATION

# INSTALLATION MANUAL

- Before starting installation, read the following description together with the installation manual included with the unit.
- Please read carefully and observe fully the following safety precautions.

| ⚠ WARNING | Precautions that must be observed to prevent injuries or death. |
|---|---|

- After installation carry out a test run to ensure correct operation, then explain operation method and safety precautions to the end user. Tell your customers to keep this installation manual together with the operation manual, and when they give or sell this machine to any other person include this installation manual and operation manual with it.

## ⚠ WARNING

- Before installing any accessories on the unit ensure the unit is isolated from the power supply.
- Connections must be made securely and without tension on the terminals.
- All electrical work should be performed by a qualified technician according to local regulations and the instructions given in this manual.
- Do not remodel this part.

<Included items>

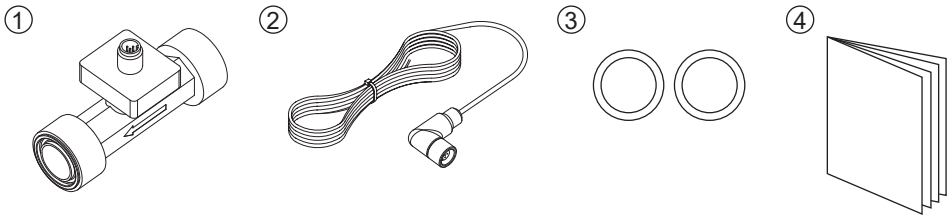


| | Item | Piece |
|---|---|---|
| ① | Flow sensor body | 1 |
| ② | Flow sensor cable 5 m, color: black | 1 |
| ③ | O-ring | 2 |
| ④ | Installation manual (This paper) | 1 |

■ Local system

Install the flow sensor between the mixing tank and the plate heat exchanger when using the mixing tank.

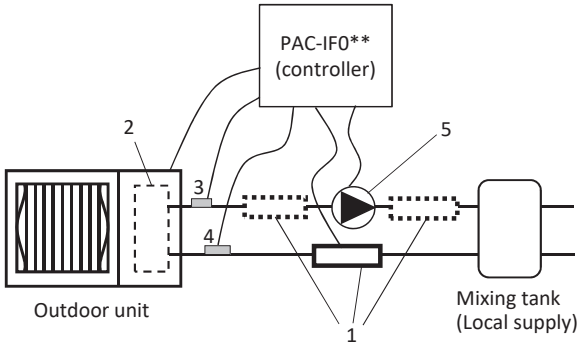


| Number | Component |
|---|---|
| 1 | Flow sensor |
| 2 | Plate heat exchanger |
| 3 | Flow temp. thermistor (THW1) |
| 4 | Return temp. thermistor (THW2) |
| 5 | Circulation pump (local supply) |

**<Note>**

Be sure to install this optional part when the combination of the below models are set.

- Outdoor unit: PUZ-(H)WM****A
- Indoor unit: PAC-IF072B-E
  PAC-IF033****-E

Install this flow sensor optionally for the combination of the below models.

- Outdoor unit: SUZ-SWM**VA
  PUD-S(H)WM***AA
  PUHZ-S(H)W*****A
- Indoor unit: PAC-IF071B-E
  PAC-IF033****-E

## 1.Installation

The unit can be installed in both horizontal as well as vertical pipelines.
The flow sensor is only suitable for use in fully filled piping.

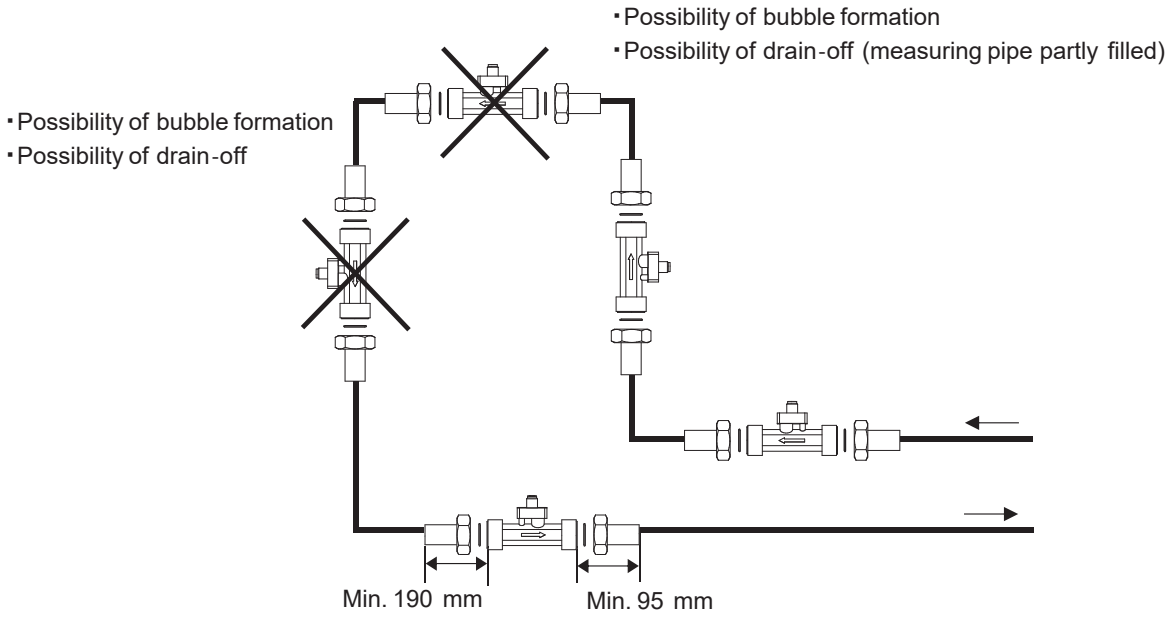


**<Note>**
▪ The length of the inlet section should be at least 190 mm and the length of the outlet section should be at least 95 mm.

## 2. Electrical work

| Model | Signal name | Terminal block | Connector | Item |
|---|---|---|---|---|
| PAC-IF07*B-E | INA1 | TBI.4 1-3 | CN1A | Flow sensor |
| PAC-IF033****-E | — | — | CN1A | Flow sensor |

## 3. Dip switch setting

| Model | Dip switch | Function | OFF | ON |
|---|---|---|---|---|
| PAC-IF07*B-E | SW2-8 | Flow sensor | WITHOUT Flow sensor | WITH Flow sensor |
| PAC-IF033****-E | SW4-2 | Flow sensor | WITHOUT Flow sensor | WITH Flow sensor |

## 4. Specifications

| | |
|---|---|
| Ambient temperature range | 0 to 70 °C |
| Fluid temperature range | 5 to 90 °C |

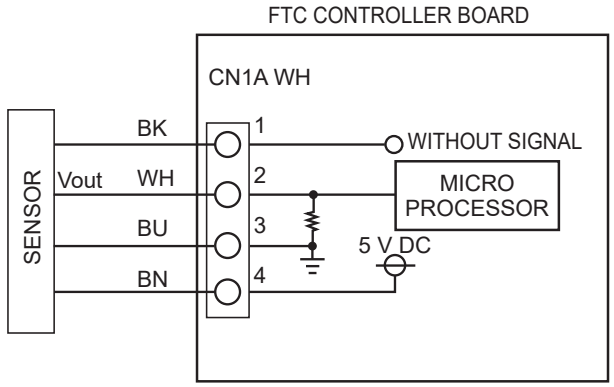


④-③ : 5 V (DC)
②-③ : Output Vout (DC)

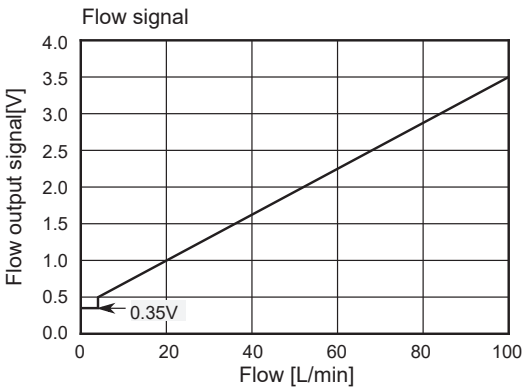

MITSUBISHI ELECTRIC

# Air to Water Heat Pump Optional Parts
# Connector for drain hose heater
# MAC-061RA-E

## SAFETY PRECAUTIONS

- Before starting installation, read the "Safety Precautions" described below.
- The following precautions must be observed as it describes the serious matters for safety.
- The safety precautions are described with the degree of danger.

| | |
|---|---|
| ⚠WARNING | When you handle wrong, it can lead to death or serious injury. |
| ⚠CAUTION | When you handle wrong, it can lead to injury or damage to building and furniture. |

- After installation, make test operation and confirm that it works properly. and explain the safety precautions, operation method, and maintenance to your customers.
  Tell your customers to keep this installation manual together with the operation manual with them, and when they give or sell this machine to other person put this installation manual and operation manual with it.

### ⚠WARNING

**The installation must be done by dealer or qualified person.**
- **If the customers do the installation by themselves and it is not perfectly installed it can cause water leak, electric shock, or fire.**

**The installation must be done in accordance with this manual.**
- **If the installation is not perfectly done, it can cause water leak, electric shock, or fire.**

**The installation must be done carefully.**
- **If you handle edges of parts, fins or something like that without protective gloves, you may be injured.**

**Never try any modification.**
- **For repair, ask your dealer.**
  **If the machine is modified or repaired unperfectly, it can cause water leak, electric shock, or fire.**

**Never move or reinstall the machine by the customers.**
- **If the installation is not perfectly done, it can cause water leak, electric shock, or fire. Ask your dealer or qualified person.**

**The wiring must be securely done by using proper cable. The wires should be connected to the terminals not to have external force of the cable.**
- **Imperfect connections can cause heat or fire.**

**The terminal cover (panel) of the unit must be Installed securely.**
- **Imperfect installation can cause fire or electric shock by dust or water.**

**The electric installation must be done by a qualified person in accordance with this installation manual. Use the separate circuit only for this machine and use rated voltage and circuit breaker.**
- **If the electric circuit power is not sufficient or the wiring is not properly done, it can cause electric shock or fire.**

## Contents

| ① Terminal block ×1 | ② Screw M4×12 ×2 | ③-1 Lead wire with connector (3PIN) ×1 for SUZ-SWM30/40/60VA* (-SC) | ③-2 Lead wire with connector (2PIN) ×1 for SUZ-SWM80/100VA* |
|---|---|---|---|
| 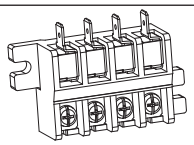 | 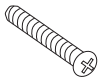 | 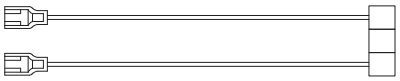 | 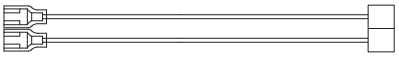 |

## Installation

(1) Remove the SERVICE PANEL fixing screws, then slide the SERVICE PANEL downward to remove it.
(SUZ-SWM30/40/60: 4 for left / 4×10) (SUZ-SWM80/100: 2 for left / 4×10)
(2) Disconnect the power supply cable from Terminal block.
(3) Disconnect the indoor/outdoor connecting cable from Terminal block.
(4) Remove the VALVE COVER fixing screws, then slide the VALVE COVER downward to remove it. (All models: 1 for left / 4×10)
(5) Remove the TOP PANEL fixing screw to remove it. (SUZ-SWM30/40/60: 2 for right and 2 for left / 4×10) (SUZ-SWM80/100: 1 for front, 2 for right and 2 for left / 4×10)
(6) Remove the FRONT PANEL fixing screws to remove it.
(SUZ-SWM30/40/60：4 for front, 3 for right and 2 for left / 4×10) (SUZ-SWM80/100: 6 for front, 3 for right and 4 for left / 4×10)
(7) Remove the BACK PANEL fixing screws to remove it.
(SUZ-SWM30/40/60: 6 for right and 3 for rear / 4×10) (SUZ-SWM80/100: 6 for right and 3 for rear / 4×10)
*The screw (2pcs) for fixing REAR GUARD is not same as other screws.

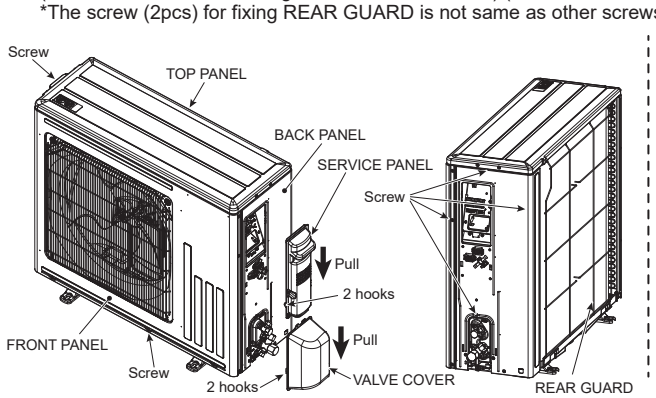

<For SUZ-SWM30/40/60VA* (-SC)>

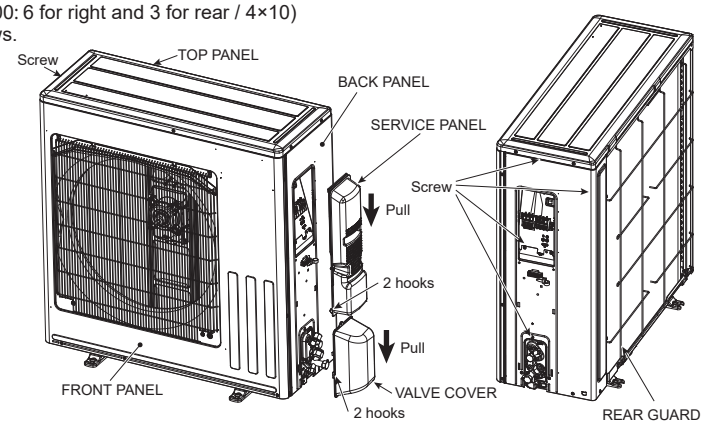

<For SUZ-SWM80/100VA*>

<For SUZ-SWM30/40/60VA* (-SC)>
(8) Connect one end of the Lead wire with connector ③-1 to Terminal block ①. Leave the other end of it unconnected.
(9) Fix the Terminal block ① with the screw ② (1pc) so that the Lead wire with connector ③-1 comes inside of outdoor unit.
(10) Connect the other end of the Lead wire with connector ③-1 to CN722 on the outdoor controller circuit board.
(11) Assemble the parts removed in the previous steps form (1) to (7) in the reverse order of removal.

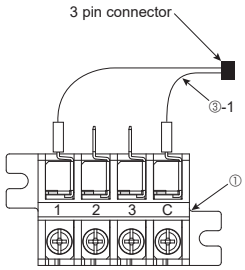


*Not use 2nd and 3rd pin

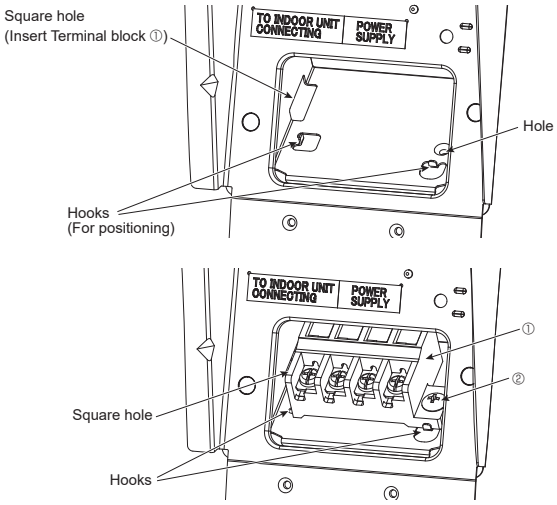


● Drain hose heater RELAY connection only
● MAX. current 1A

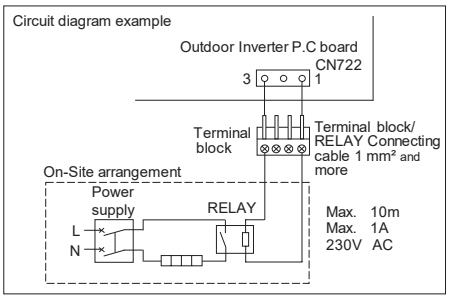


<For SUZ-SWM80/100VA*>
(8) Connect one end of the Lead wire with connector ③-2 to Terminal block ①. Leave the other end of it unconnected.
(9) Fix the Terminal block ① with the screw ② (2 pcs) so that the Lead wire with connector ③-2 comes inside of outdoor unit.
(10) Connect the other end of the Lead wire with connector ③-2 to CN601 on the outdoor controller circuit board.
(11) Assemble the parts removed in the previous steps form (1) to (7) in the reverse order of removal.

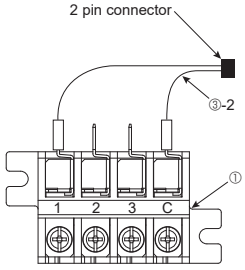


*Not use 2nd and 3rd pin

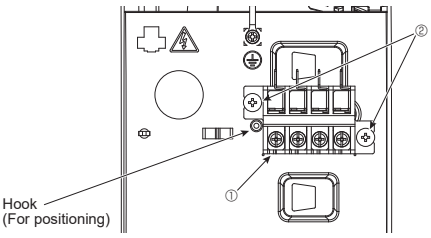


● Drain hose heater RELAY connection only
● MAX. current 1A

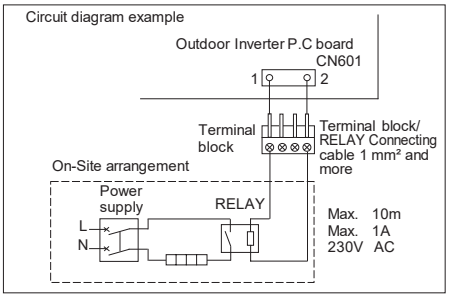


Note 1: Connect the cable as they were If any of the cable are disconnected during installation.
Note 2: Take great care not to pinch the lead wire when installing panels.
Note 3: Terminal block/RELAY connecting cable shall not be lighter than polychloroprene sheathed flexible cable. (Design 60245 IEC 57)
Note 4: Connecting cables shall be wired as below.

<For SUZ-SWM30/40/60VA*(-SC)>

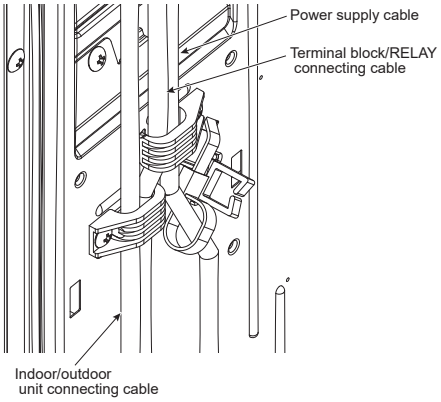


<For SUZ-SWM80/100VA*>

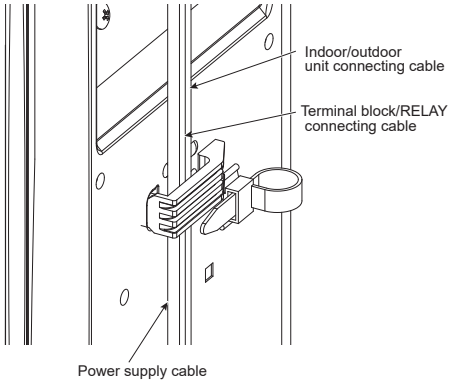

MITSUBISHI ELECTRIC

# Heat Pump Outdoor Unit Optional Parts Connector for drain hose heater MAC-062RA-E

## SAFETY PRECAUTIONS

- Before starting installation, read the "SAFETY PRECAUTIONS" described below.
- The following precautions must be observed as it describes the serious matters for safety.
- The safety precautions are described with the degree of danger.

| | |
|---|---|
| ⚠ WARNING | When you handle wrong, it can lead to death or serious injury. |
| ⚠ CAUTION | When you handle wrong, it can lead to injury or damage to building and furniture. |

- After installation, make test operation and confirm that it works properly, and explain the safety precautions, operation method, and maintenance to your customers.
  Tell your customers to keep this installation manual together with the operation manual with them, and when they give or sell this machine to other person, give this installation manual and the operation manual with it.

### ⚠ WARNING

**The installation must be done by dealer or qualified person.**
- **If customers install the machine by themselves and it is not perfectly installed, it can cause water leak, electric shock, or fire.**

**The installation must be done in accordance with this manual.**
- **If the installation is not perfectly done, it can cause water leak, electric shock, or fire.**

**The installation must be done carefully.**
- **If you handle edges of parts, fins or something like that without protective gloves, you may be injured.**

**Never try any modification.**
- **For repair, ask your dealer.**
  **If the machine is modified or repaired imperfectly, it can cause water leak, electric shock, or fire.**

**Customers shall not move or reinstall the machine by themselves.**
- **If the installation is not perfectly done, it can cause water leak, electric shock, or fire. Ask your dealer or qualified person.**

**The wiring must be securely done by using proper cable. The wires should be connected to the terminals not to have external force of the cable.**
- **Imperfect connections can cause heat or fire.**

**The terminal cover (panel) of the unit must be installed securely.**
- **Imperfect installation can cause fire or electric shock by dust or water.**

**The electric installation must be done by a qualified person in accordance with this installation manual. Use the separate circuit only for this machine and use rated voltage and circuit breaker.**
- **If the electric circuit power is not sufficient or the wiring is not properly done, it can cause electric shock or fire.**

**If the supply cord is damaged, it must be replaced by the manufacturer, its service agent or similarly qualified persons in order to avoid a hazard.**

**Do not touch the unit, parts, or wires with wet hands.**
**Doing so may cause electric shock.**

### ⚠ CAUTION

**Be sure to cut off the main power in case of wiring works.**
- **Failure to do so could cause electric shock.**

**Install an earth leakage breaker depending on the installation place.**
- **If an earth leakage breaker is not installed, it could cause electric shock.**

## Contents

| ① Terminal block assy ×1 | ② Screw ×1 | ③ Cable strap ×1 |
|---|---|---|
| 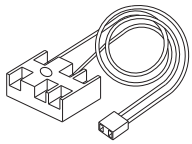 | 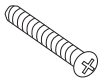 | 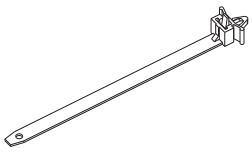 |

## Installation

**Circuit diagram example**

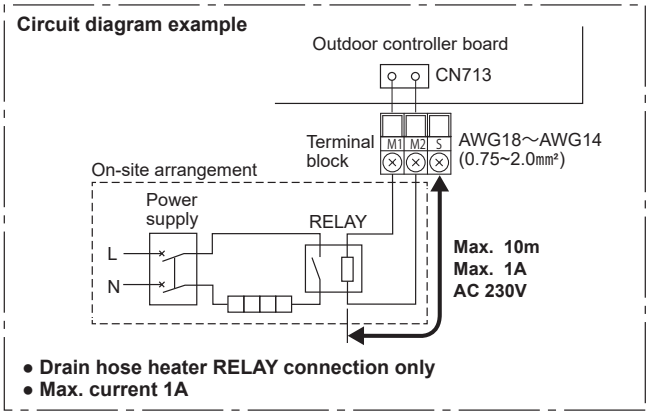


- **Drain hose heater RELAY connection only**
- **Max. current 1A**

**Notice about terminal treatment of cable and wire**

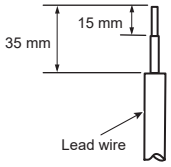


- Be sure to attach each screw to its correspondent terminal when securing the cord and/or the wire to the terminal block.
- Make earth wire a little longer than others. (More than 35 mm)
- For future servicing, give extra length to the connecting wires.

**In case of PXZ UNIT size H710xW840xD330**

1) Remove the service panel, top panel and front panel.
2) Attach the terminal block ① to CO PB Holder with the screw ②.
3) Connect the lead wire ① of connector side to CN713 port on the outdoor controller board.
4) Connect cables (locally procured) for a drain hose heater RELAY to the terminal block ① so that no part of its core is appeared, and no external force is reached to the connecting section of the terminal block.
5) Firmly tighten the terminal screws to prevent the wires from loosening.
   After tightening, pull the wires lightly to confirm that they do not move.
6) Fix the lead wire with the cable clamp and cable strap ③. Do not fix the wire at fixed point of screw in the cable clamp. Run the cables or wires so as not to deform the service panel. Otherwise, rainwater may enter the outdoor unit.
7) Assemble the service panel, top panel, and front panel securely.

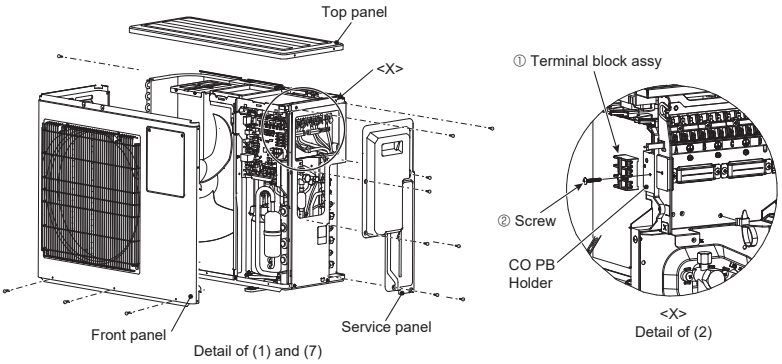


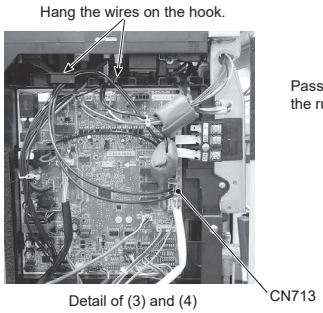


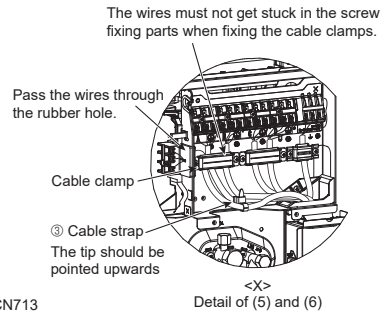


**In case of PXZ UNIT size H796xW950xD330**

1) Remove the service panel and cable cover.
2) Attach the terminal block ① to TB Bed with the screw ②.
3) Connect the lead wire ① of connector side to CN713 port on the outdoor controller board.
4) Pass the cables (locally procured) for a drain hose heater RELAY to the terminal block ① through the grommet, and connect them so that no part of its core is appeared, and no external force is reached to the connecting section of the terminal block.
5) Firmly tighten the terminal screws to prevent the wires from loosening.
   After tightening, pull the wires lightly to confirm that they do not move.
6) Fix the lead wire with the cable clamp. Do not fix the wire at fixed point of screw in the cable clamp. Run the cables or wires so as not to deform the service panel. Otherwise, rainwater may enter the outdoor unit.
7) Assemble the cable cover, service panel, top panel, and front panel securely.

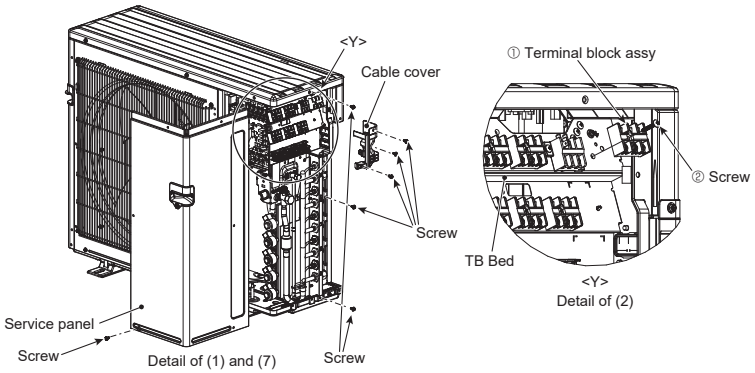


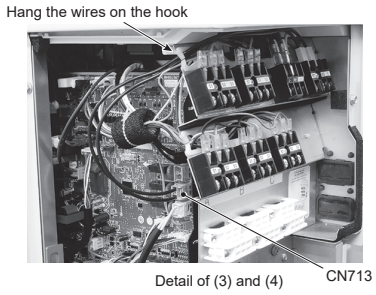


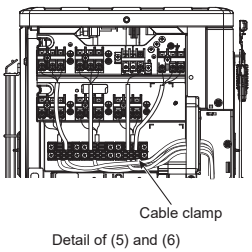

MITSUBISHI ELECTRIC

# Heat Pump Outdoor Unit Optional Parts
# Muffler
# MAC-001MF-E

## SAFETY PRECAUTIONS

- Before starting installation, read the "SAFETY PRECAUTIONS" described below.
- The following precautions must be observed as it describes the serious matters for safety.
- The safety precautions are described with the degree of danger.

| | |
|---|---|
| ⚠WARNING | When you handle wrong, it can lead to death or serious injury. |
| ⚠CAUTION | When you handle wrong, it can lead to injury or damage to building and furniture. |

- After installation, make test operation and confirm that it works properly, and explain the safety precautions, operation method, and maintenance to your customers.
  Tell your customers to keep this installation manual together with the operation manual with them, and when they give or sell this machine to other person, give this installation manual and the operation manual with it.

### ⚠WARNING

**The installation must be done by dealer or qualified person.**
- **If customers install the machine by themselves and it is not perfectly installed, it can cause water leak, electric shock, or fire.**

**The installation must be done in accordance with this manual.**
- **If the installation is not perfectly done, it can cause water leak, electric shock, or fire.**

**The installation must be done carefully.**
- **If you handle edges of parts, fins or something like that without protective gloves, you may be injured.**

**Never try any modification.**
- **For repair, ask your dealer.**
  **If the machine is modified or repaired imperfectly, it can cause water leak, electric shock, or fire.**

**Customers shall not move or reinstall the machine by themselves.**
- **If the installation is not perfectly done, it can cause water leak, electric shock, or fire. Ask your dealer or qualified person.**

**Check the outdoor unit manual before the work, and the installation must be done in accordance with the manual.**
- **If the installation is not perfectly done, it can cause water leak, electric shock, or fire.**

**Pipe-work shall be protected from physical damage.**

**The installation of pipe-work shall be kept to a minimum.**

**Fasten a flare nut with a torque wrench as specified in this manual.**
- **If fastened too tight, a flare nut may break after a long period of use and cause refrigerant leakage.**

**Use appropriate tools and piping materials for installation.**
- **The pressure of R32 is 1.6 times more than R22. Not using appropriate tools or piping materials and incomplete installation could cause the pipes to burst or injury.**

**Check that the refrigerant gas does not leak after installation has been completed.**
- **If refrigerant gas leaks indoors and comes into contact with the flame of a fan heater, space heater, stove, etc., harmful substances will be generated.**

**When installing the unit, securely connect the refrigerant pipes before starting the compressor.**
- **If the compressor is started before the refrigerant pipes are connected and when the stop valve is open, air could be drawn in and the pressure in the refrigeration cycle could become abnormally high. This could cause the pipes to burst or injury.**

### ⚠CAUTION

**Install an earth leakage breaker depending on the installation place.**
- **If an earth leakage breaker is not installed, it could cause electric shock.**

**Perform the drainage/piping work securely according to the installation manual.**
- **If there is defect in the drainage/piping work, water could drop from the unit, soaking and damaging household goods.**

**Do not touch the air inlet or the aluminum fins of the outdoor unit.**
- **This could cause injury.**

**Do not install the outdoor unit where small animals may live.**
- **If small animals enter and touch the electric parts inside the unit, it could cause a malfunction, smoke emission, or fire. Also, advise user to keep the area around the unit clean.**

**Do not operate the air conditioner during interior construction and finishing work, or while waxing the floor.**
- **Before operating the air conditioner, ventilate the room well after such work is performed. Otherwise, it may cause volatile elements to adhere inside the air conditioner, resulting in water leakage or scattering of dew.**

**When there are the ports which are not used, make sure their nuts are tightened securely.**

**When charging the refrigerant system with additional refrigerant, be sure to use liquid refrigerant. Charge the liquid refrigerant slowly, otherwise the compressor will be locked.**
- **To maintain the high pressure of the gas cylinder, warm the gas cylinder with warm water (under 40°C) during cold season. But never use naked fire or steam.**

**Note:**
**Reusable mechanical connectors and flared joints are not allowed indoors.**
**When connecting the refrigerant piping by brazing, rather than using flare connections, complete all brazing prior to connecting indoor unit to outdoor unit.**

## Contents

| ① Muffler ×1 | ② Pipe cover ×2 | ③ Pipe cover ×1 |
|---|---|---|
| 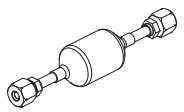 | 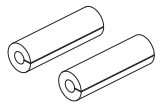 | 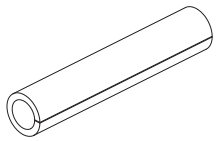 |

■ Parts to be provided at your site

| | | |
|---|---|---|
| ④ | Piping tape | 1 |

## Installation

Connection pipe condition

| Connection side | Indoor | Outdoor |
|---|---|---|
| Connection Gas pipe size | ø9.52 | ø9.52 |

1. Connect the muffler ① to the gas piping within 3 meters from the piping connection port of the outdoor unit outside.
2. The muffler can be connected in any orientation.

## Flaring work

3. Cut the copper pipe correctly with a pipe cutter. (Fig. 1, 2)
4. Completely remove all burrs from the cut cross section of pipe. (Fig. 3)
   • Point the copper pipe downward while removing burrs to prevent them from dropping in the pipe.
5. Remove flare nuts (A) and port cap attached to the muffler ①, then put the flare nuts on the pipe with the burrs completely removed. (Not possible to put them on after flaring work.)
6. Perform the flare work (Fig. 4 and 5).
   Firmly hold the copper pipe according to the dimensions shown in the table.
   Select X mm from the table according to the tool selected.
7. Check the following.
   • Check the flare work based on Fig.6.
   • If the flare work is not proper, cut off the flared section and do flaring work again.

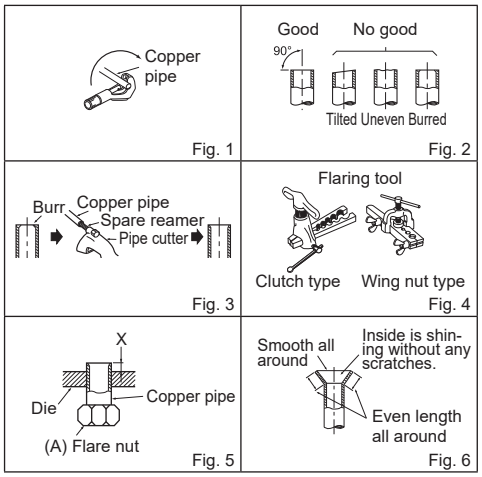


| Pipe diameter (mm) | Nut (mm) | X (mm) | | | Tightening torque | |
|---|---|---|---|---|---|---|
| | | Clutch type tool for R32, R410A | Clutch type tool for R22 | Wing nut type tool for R22 | N·m | kgf·cm |
| Ø9.52 (3/8") | 22 | 0 to 0.5 | 1.0 to 1.5 | 1.5 to 2.0 | 34.4 to 41.2 | 350 to 420 |

## Pipe connection

8. Align the center of the pipe with that of the pipe at the muffler, then tighten the flare nuts by 3 to 4 turns by hand.
9. Tighten the flare nuts in the range of from 34.4N·m (350kgf·cm) to 41.2 N·m(420kgf·cm).
10. Perform the procedure 3 to 4 for outdoor and indoor side.
11. After connecting the muffler with the piping at an indoor and outdoor unit, cover the muffler and piping joints with the pipe covers ② and ③. (Do not point their slits in the same orientation.)
12. Using the piping tape ④, apply the tape starting from the root of Indoor gas pipe.
    Tape the pipe cover securely so that there is no clearance between the cover and the parts (muffler etc.) and at the slits. (For the detail, see the following figure.)

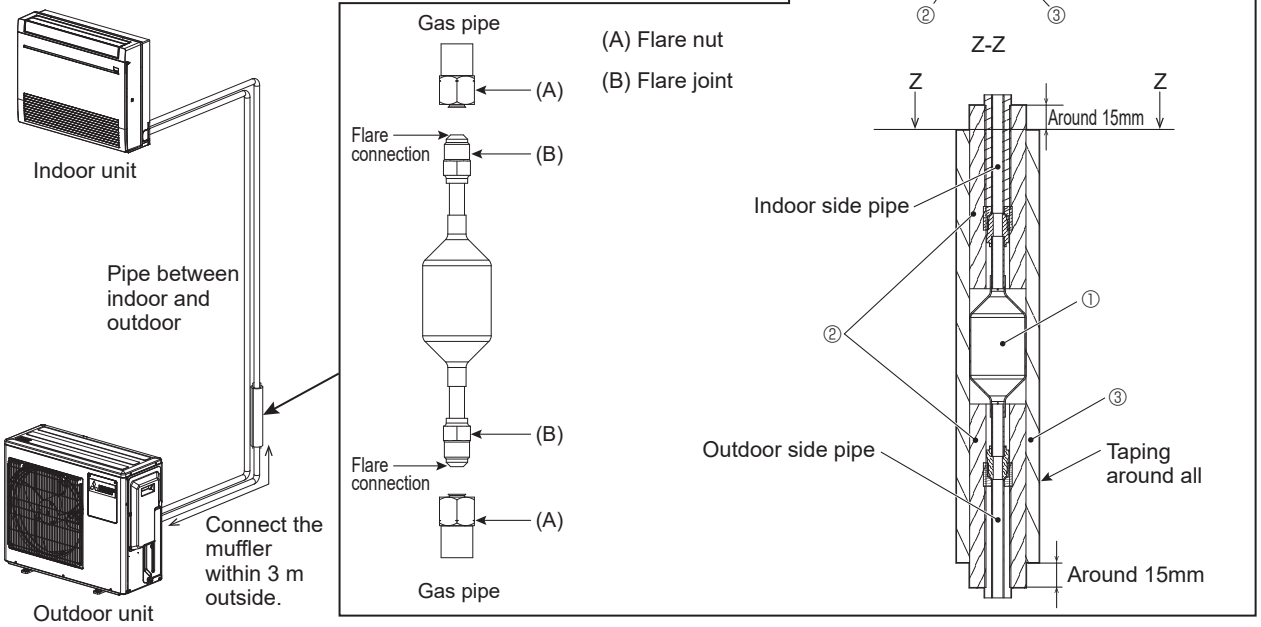

MITSUBISHI ELECTRIC

# Air to water Optional parts
# Installation Manual for Joint Pipe and Nut
## MAC-001FN-E

## SAFETY PRECAUTIONS

- Carefully read this section “SAFETY PRECAUTIONS”, and securely install the optional parts.
- Be sure to observe the cautions described here: They include critical contents for safety.
- The following indications show the classification of danger and possible consequences following incorrect handling.

| | |
|---|---|
| ⚠ WARNING | Incorrect handling could lead to death or serious injury. |
| ⚠ CAUTION | Incorrect handling could lead to injury or damage to house and household articles. |

- After installation, perform a test run and make sure that there is no abnormality, and ask your customer to keep this installation sheet with the installation manual at all times. Also ask the customer to transfer these manuals to a new user if the user changes.

### ⚠ WARNING

**Ask the dealer or specialist for installation.**
- If installed incorrectly by user, water leak, electric shock, fire, etc. could result.

**Securely perform installation using tools and piping parts specially made for the refrigerant R410A·R32, according to this installation manual.**
- Since pressure of HFC type refrigerant R410A·R32 being used increases higher about 1.6 times compared with R22, if specified piping parts are not used or installation is not correct, it could cause explosion or injury, and in less severe cases, water leak, electric shock or fire.

**If the unit is installed in a small room, make sure that limit density will not be exceeded even if refrigerant leaks.**
- Consult your dealer for proper countermeasures against exceeding limit density.
  If limit density is exceeded, it may cause lack of oxygen hazard.

**Ventilate if refrigerant leaks.**
- If refrigerant touches heat source, it could cause generation of harmful gas.

**When installing or reinstalling after moving, do not mix any material inside refrigerant cycle other than refrigerant specified (R410A·R32).**
- If air, etc. is mixed, pressure inside of refrigerant cycle may become abnormally high, which could cause explosion, etc.

**Never remodel.**
- Consult your dealer for repair. If remodeled or repaired incorrectly by user, it may cause water leak, electric shock or fire.

**Do not move and re-install by user itself.**
- If installation is not correct, it may cause water leak, electric shock or fire. Ask your dealer or vendor.

**After installation is complete, make sure that refrigerant does not leak.**
- If refrigerant leaks inside the room and reaches heat source such as fan heater, stove, etc., it could cause generation of harmful gas.

## Before installation

### ⚠ CAUTION

**Do not use in unusual circumstances.**
- Do not use in a place where there is much oil (including machine oil), steam, sulfration gas, or high salt content (seaside area), or where outdoor unit is blocked by snow cover. Doing so could damage the performance of the unit and parts may be broken.

**Do not install in a place where flammable gas could be generated, flow in, remain or leak.**
- Gas accumulating around the unit could cause fire or explosion.

## Before performing installation (moving)

### ⚠ CAUTION

**Securely apply heat-insulation to refrigerant pipe so that no condensation occurs.**
- If heat-insulation is incorrect, condensation could occur on the surface of pipes and dewdrops could accumulate on ceiling, floor or important goods.

**Tighten flare nuts using torque wrench according to the specified method.**
- If tightened too strongly, there could occur breakage of flare nut or leakage of refrigerant after a long period of time.

Before installing these optional parts, be sure to read **SAFETY PRECAUTIONS** in the installation manual attached to the outdoor unit and observe instructions given there.

**Make sure that you have all the following parts, in addition to this manual in this box:**

| Nut (For outdoor unit) ×1 | Joint (For indoor unit) ×1 |
|---|---|
| Unit side On-site pipe side | Unit side 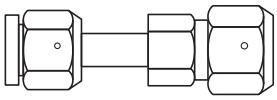 On-site pipe side |

**Note: There are holes in the nut to prevent damage during freezing.**

Installation procedure (carefully read the following before installing.)
When using the outdoor unit of PUZ-S(H)WM series, a gas piping of ø15.88 is recommended for cooling operation with long piping length.
By setting this nut to the gas pipe of the outdoor unit and this joint to the gas pipe of the indoor unit, ø15.88 size pipe can be connected.
**Note: When installing this optional parts, be sure to read "Refrigerant pipe connection" in the installation manual attached to unit or pipe.**

**Notice:**
Follow the instructions below to prevent abrasive components contained in sandpaper and cutting tools entering the refrigerant circuit because those components can cause failures of the compressor and valves.
- To deburr pipes, use a reamer or other deburring tools, not sandpaper.
- To cut the pipes, use a pipe cutter, not a grinder or other tools that use abrasive materials.
- When cutting or deburring pipes, do not allow cutting chips or other foreign matters to enter the pipes.
- If cutting chips or other foreign matters enter the pipes, wipe them off the inside of the pipes.

1. Flare nut processing for outdoor unit.
   1) Apply flare processing to on-site pipes to adapt to R32, according to the table on the right.
      Use the included flare nut at this time.
      Note: Check the installation manual attached to the outdoor unit for advisability on whether or not on-site (existing) pipes can be used.
   2) Thinly apply refrigeration oil (locally procured) on flare surface.
   3) For connection, first align the center, then tighten the first 3 to 4 turns of flare nut by hand.
   4) Securely tighten flare nut using torque wrench according to the table on the right.

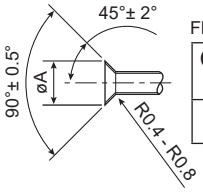


Flare cutting dimensions

| Copper pipe O.D. (mm) | Flare dimensions øA dimensions (mm) |
|---|---|
| ø15.88 | 19.3 - 19.7 |

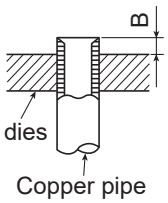


| Copper pipe O.D. (mm) | B (mm) Flare tool for R32 Clutch type |
|---|---|
| ø15.88 | 0 - 0.5 |

Note: When flare processing for refrigerant R32 is applied using current tool, refer to the table above.
B size can be secured using copper pipe gauge for margin adjustment.

2. Flare nut processing for indoor unit.
   1) Remove flare nut from joint and apply flare processing to on-site pipes to adapt to R32, according to the table on the right.
      Use the removed flare nut at this time.
      Note: Check the installation manual attached to the outdoor unit for advisability on whether or not on-site (existing) pipes can be used.
   2) Remove caps (both ends) for protection against mixing of foreign materials from optional part, and thinly apply refrigeration oil (locally procured) on flare surface.
   3) For connection, first align the center, then tighten the first 3 to 4 turns of flare nut by hand.
   4) Securely tighten flare nut using torque wrench according to the table on the right.

Refrigeration oil application point

Apply refrigeration oil to entire circumference of flare sheet surface.

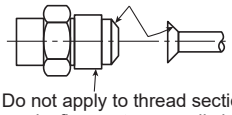

Note: Do not apply to thread section.
(If applied to threads, flare nut can easily be loosened.)

<Proper tightening torque using torque wrench>

| Copper pipe O.D. (mm) | Width across flats (mm) | Tightening torque (N·m) |
|---|---|---|
| ø12.7 | 26 | 53.0±3.9 |
| ø15.88 | 29 | 76.0±2.5 |

3. Check and test run.
   1) After refrigerant pipe is connected, be sure to perform gas leakage inspection for connected points.
   2) Heat insulation is necessary for this optional part: Wrap heat insulator (locally procured) around the on-site pipes and also the optional part (for dewdrop dripping prevention).
   3) Perform test run according to the installation manual of the unit, making sure to also perform operation check.

MEMO

MITSUBISHI ELECTRIC CORPORATION
HEAD OFFICE: TOKYO BUILDING, 2-7-3, MARUNOUCHI, CHIYODA-KU, TOKYO 100-8310, JAPAN

Issued in Jul. 2023 M-P0798H SIZ2008<MEE>

Specifications are subject to change without notice.